REPORT NO. DOT-TSC-FAA-71-12

SIMULATION MODEL FOR THE CONVAIR CV-880 AND BOEING 720 B AIRCRAFT-AUTOPILOT SYSTEMS IN THE APPROACH CONFIGURATION

JOSEPH S. KOZIOL JR.
TRANSPORTATION SYSTEMS CENTER
55 BROADWAY
CAMBRIDGE, MA. 02142

JULY 1971
PRELIMINARY MEMORANDUM

Prepared for
FAA/SRDS
800 INDEPENDENCE AVE. S. W.
WASHINGTON, D.C. 20590

1. Report No.	2. Government Accession No.	3. Recipient's Catalog No.
DOT-TSC-FAA-71-12		

4. Title and Subtitle	5. Report Date
Simulation Model For the Convair CV-880 and Boeing 720 B Aircraft-Autopilot Systems in the Approach Configuration	July, 1971
	6. Performing Organization Code: PGL
7. Author(s): Joseph S. Koziol, Jr.	8. Performing Organization Report No.
9. Performing Organization Name and Address: DOT/Transportation Systems Center, 55 Broadway, Cambridge, Mass. 02142	10. Work Unit No.: PPA FA12 (FY 71)
	11. Contract or Grant No.
12. Sponsoring Agency Name and Address: FAA/SRDS, 800 Independence Ave., S. W., Washington, D. C. 20590 (202)426-8605	13. Type of Report and Period Covered: Preliminary Memorandum
	14. Sponsoring Agency Code: FAA/SRDS

15. Supplementary Notes

16. Abstract

This report presents the basic equations and data required to simulate the Convair CV-880 and Boeing 720 B aircraft-autopilot systems in the approach configuration from altitude and heading hold down to flare. The approach maneuver is discussed in Section I. A fixed point aircraft model is assumed and is presented in Section II. It consists of linearized, rigid body, six-degree-of-freedom perturbation equations referenced to the stability axis, body axis equations, Euler angle equations, trajectory equations and hinge moment equations.

The basic vehicle data, trim data for the approach configuration, and a description of the autopilot for the Convair CV-880 and Boeing 720 B are presented in Sections III and IV respectively. The Boeing 720 B data is incomplete: missing aircraft parameters are noted while missing and unclear autopilot data are discussed in Section IV. This data is currently being obtained from the Boeing Company.

17. Key Words	18. Distribution Statement
Aircraft-Autopilot Model, Simulation Data, Convair CV-880 and Boeing 720 B aircraft, Flight Control System, Instrument Landing System, Landing Approach	Unclassified-Limited (Distribution controlled by TSC Landing Systems Program Branch)

19. Security Classif. (of this report)	20. Security Classif. (of this page)	21. No. of Pages	22. Price
Unclassified	Unclassified	47	

TABLE OF CONTENTS

LIST OF ILLUSTRATIONS

LIST OF TABLES

LIST OF ABBREVIATIONS AND SYMBOLS

Notation		
a_n	Measured Normal Acceleration at Accelerometer Station	feet/second^2
b	Wing Span	feet
$\bar{c}$	Wing Mean Aerodynamic Chord	feet
c_e, c_a, c_r	Elevator Chord (or Aileron or rudder)	feet
C_D	Non-dimensional Drag Coefficient at Trim Condition	-
$C_{D()}$	Non-dimensional Drag Stability Derivative	1/radian
$C_{h_{e()}}, C_{h_{a()}}, C_{h_{r()}}$	Non-dimensional Hinge Moment Stability Derivative	1/radian
C_L	Non-dimensional Lift Force Coefficient at Trim Condition	-
$C_{L()}$	Non-dimensional Lift Force Stability Derivative	1/radian
C_ℓ	Airplane Rolling Moment Coefficient	-
$C_{\ell()}$	Non-dimensional Rolling Moment	1/radian
C_m	Airplane Pitching Moment Coefficient at Trim Condition	-
$C_{m()}$	Non-dimensional Pitching Moment Stability Derivative	1/radian
C_n	Airplane Yawing Moment Coefficient	-
$C_{n()}$	Non-dimensional Yawing Moment Stability Derivative	1/radian
C_Y	Airplane Side Force Coefficient	-

LIST OF ABBREVIATIONS AND SYMBOLS (CONT)

Notation		
$C_{y()}$	Non-dimensional Side Force Stability Derivative	1/radian
cg	Center of Gravity of Airplane	-
g	Acceleration of Gravity (32.2)	feet/second^2
GE	Ground Effect	-
h	Altitude	feet
i_{pr}	Incidence of Engine Thrust Axis with Respect to Fuselage Reference Axis	degrees
I_{xx}, I_{yy}, I_{zz}	Moment of Inertia about X, Y, or Z axes	slug-feet^2
I_{xz}	Aircraft Product of Inertia	slug-feet^2
I_e, I_a, I_r	Elevator Moment of Inertia (or Aileron or Rudder)	slug-feet^2
K	Ground Effect Factor	-
ℓ_E	Distance between cg and Engine Thrust Line in XZ plane	feet
M	Mach. Number	-
m	Aircraft Mass	slugs
p	Roll Rate About Reference Axis System	radians/second
q	Pitch Rate About Reference Axis System	radians/second
$\bar{q}$	Dynamic Pressure	lbs/feet^2
r	Yaw Rate About Reference Axis System	radians/second
S	Wing Area	feet^2

LIST OF ABBREVIATIONS AND SYMBOLS (CONT)

Notation		
S_e, S_a, S_r	Elevator Area (or Aileron or Rudder)	$feet^2$
ΔT	Change in Propulsive Thrust	lbs
U_o	Steady State Forward Velocity	feet/second
U	Total Forward Velocity	feet/second
u	Perturbed Forward Velocity	feet/second
V	Total Lateral Velocity	feet/second
v	Perturbed Lateral Velocity	feet/second
V_R	True Airspeed	knots
V_{WIND}	Wind Velocity	feet/second
W	Total Normal Velocity	feet/second
w	Perturbed Normal Velocity	feet/second
x_{accel}	Distance from Center of Gravity to Accelerometer Station	feet
α	Perturbed Angle of Attack with Respect to Stability Axis	radians
α_{trim}	Trim Angle of Attack with Respect to Fuselage Reference Line	degrees
$\alpha_{(trim)_{GE}}$	Increase of Trim Angle of Attack Due to GE (with Respect to Fuselage Reference Line)	degrees
α_{OL}	Angle of Attack at Zero Lift (with Respect to Fuselage Reference Line)	degrees
β	Side Slip Angle	radians

LIST OF ABBREVIATIONS AND SYMBOLS (CONT)

Notation

$\delta_e, \delta_a, \delta_r, \delta_s, \delta_f$	Elevator Deflection (or Aileron, Rudder, Spoiler or Flap)	radians
$\delta_{te}, \delta_{ta}, \delta_{tr}$	Elevator tab deflection (or Aileron or Rudder)	radians
$\delta e_s, \delta a_s, \delta r_s$	Elevator Servo Displacement (or Aileron or Rudder)	radians
γ_o	Flight Path Angle-Steady State Condition	radians
θ	Pitch Angle	radians
Φ	Roll Angle	radians
Ψ	Yaw Angle	radians
ρ	Atmospheric Density	slug/feet^3
$(\dot{\ })$	Differentiation with Respect to Time	-

Subscripts

a	Aileron
B	Fuselage Reference Frame
E	Local Vertical Coordinate Frame
e	Elevator
f	Flaps
o	Equilibrium or Reference Condition
r	Rudder
s	Spoiler

INTRODUCTION

This report represents one of a series of tasks at the Transportation Systems Center to derive large jet transport models as part of an FAA project to develop a set of generalized equations of motion for aircraft in the approach and landing modes. The generalized simulation is then to be implemented in the National Aviation Facilities Experimental Center (NAFEC) hybrid computation facility, near Atlantic City, New Jersey, for all-weather landing studies.

This report describes the Convair CV880 and Boeing 720 B aircraft-autopilot systems in the approach configuration. The data for the Convair CV880 was supplied by the Service Technology Corporation (1) which has studied the aircraft quite thoroughly for other research projects. The data for the Boeing 720 B was supplied by NAFEC in three reports (2,3,4). Unfortunately, the data from these reports is incomplete and in places inconsistent. Reference 2 is used as the primary source of information because it is the most recent and complete. Data not available from these references are noted, and are currently being obtained from the Boeing Company. The inaccuracies of the 720 B autopilot model presented are discussed in Section 4.

SECTION 1. THE APPROACH MANEUVER

GENERAL

The approach maneuver, for purposes of this report, can be considered segmented into five phases:

1. Altitude and Heading Hold (up to approach point)
2. Localizer Capture
3. Localizer Track
4. Glideslope Capture
5. Glideslope Track

ALTITUDE AND HEADING HOLD

This phase provides control of the aircraft to selected headings and altitudes. Engagement of the Altitude and Heading Hold function will cause the aircraft to be maintained at the precise altitude and heading existing at engagement until a change in reference is introduced. This will direct the aircraft to the point of approach where the localizer portion of the ILS beam is intercepted. The ILS beam consists of a glideslope beam and a localizer beam which provide vertical and lateral steering signals respectively for approaches to the runway. Normally, the approach is defined as the phase beginning shortly before the aircraft crosses the boundary of the localizer beam. This is considered to be that angular distance (between 2 and 3 degrees depending upon the length of the runway) from the centerline of the beam. At the point of localizer interception, the aircraft is assumed to be flying straight and level at a heading around 45 degrees to the runway centerline. At this heading the aircraft is assured of a clean interception of the beam, yet does not have to make an excessive heading correction in order to align itself with the beam.

LOCALIZER CAPTURE

At some point after crossing the beam boundary, a capture maneuver is initiated. The point of initiation is a function of the logic built into the flight control system. The purpose of the capture maneuver is to align the heading of the aircraft (or more precisely the heading of the ground velocity vector) with that of the localizer beam while at the same time positioning the aircraft at the center of the localizer beam where the output of the receiver is zero. The capture maneuver is accomplished by performing a coordinated turn in the direction that reduces the difference between the heading of the aircraft and the heading of the beam. ("S" turns into the beam have been found to be undesirable.) At some point near the completion of the turn, the Localizer Track phase begins.

LOCALIZER TRACK

This phase may be divided into two sections (Initial Track and Final Track) according to the switching logic in the control system. The initial track begins at the completion of the localizer capture maneuver and continues until glideslope capture occurs. The control system will then normally switch from Initial Track to Final Track. This mode division will permit gain changes in the flight control system to achieve tighter control. During Localizer Track if the aircraft is subjected to a steady wind at right angles to the localizer beam, the flight control system will align the heading of the aircraft slightly up wind so that the resultant ground velocity vector is aligned with the beam.

GLIDESLOPE CAPTURE

At some point after crossing the boundary of the glideslope beam, the glideslope capture maneuver is initiated. The purpose of this maneuver is to align the pitch angle of the aircraft (or more precisely the flight path angle) with that of the glideslope beam while at the same time positioning the aircraft at the center of the beam.

The capture maneuver is accomplished by performing a pitch over to the angle of the glideslope. At some point near the completion of the maneuver, the glideslope track phase begins.

GLIDESLOPE TRACK

The glideslope track phase begins at some point near the completion of the glideslope capture maneuver. During this phase the aircraft is controlled to track the center of the glideslope beam. This phase ends at the initiation of the flare maneuver which is not discussed in this report.

SECTION 2. ANALYTICAL MODEL OF AIRCRAFT

The approach model common for the Convair CV880 and Boeing 720 B aircraft, consists of rigid-body, six-degree-of-freedom aircraft perturbation equations referenced to the stability axis, body axis equations, Euler angle equations, trajectory equations and hinge moment equations. (See reference 5 for a derivation of these equations.)

All force and moment coefficients in the aircraft perturbation equations are evaluated at reference flight condition; their non-dimensional forms are usually referred to as the aircraft stability derivatives arising from their use in classical aircraft stability analysis. The stability derivatives together with trim aerodynamic quantities constitute the conventional characterization of the aircraft aerodynamics at the particular flight condition.

ASSUMPTIONS IN USING AIRCRAFT EQUATIONS

The derivation of the aircraft equations involved the following assumptions.

1. Aircraft mass is constant.
2. The earth can be considered an inertial frame.
3. The aircraft is a rigid body.
4. The aircraft is symmetrical about its X-Z plane.
5. The aircraft is initially in symmetrical steady flight with no linear or angular accelerations, no angular rates, and no initial roll angle or lateral velocity.
6. Small disturbance (perturbation) theory is used. Motions and forces are referred to the equilibrium flight condition.

AIRCRAFT EQUATIONS OF MOTION

The linearized rigid-body, six-degree-of-freedom aircraft perturbation equations of motion, referenced to the stability axis system, are given in Figure 2-1. The stability axis system is an orthogonal set of axes fixed to the aircraft center of mass. These axes are adopted in this report because of their resulting simplifications in the equations of motion and aerodynamic force expressions. The initial steady state and disturbed stability axes are depicted in Figure 2-2. Airplane angles and sign conventions are described in Figure 2-3. The X-axis points in the direction of motion of the aircraft in a reference condition of steady symmetric flight. In this case, the reference values of sideslip velocity and normal velocity are zero. The Y-axis is normal to the aircraft's plane of symmetry (positive to the right)

Longitudinal Equations

$$\dot{u} = \frac{\bar{q}S}{m}\left[-\frac{2C_{D_{trim}}}{U_o}u+\left(C_{L_{trim}}-C_{D_\alpha}\right)\alpha-\left(\frac{mg}{\bar{q}S}\cos\gamma_o\right)\theta+\left(\frac{m}{\bar{q}S}U_o\right)r\beta+\frac{\cos\left(\alpha_{trim}-i_{pr}\right)}{\bar{q}S}\Delta T-F\left(C_D\right)_{GE}\right]$$

$$\dot{\alpha} = \frac{\bar{q}S}{mU_o}\left[-\frac{2C_{L_{trim}}}{U_o}u-\left(C_{D_{trim}}+C_{L_\alpha}\right)\alpha-\left(\frac{mg}{\bar{q}S}\sin\gamma_o\right)\theta+\left(\frac{mU_o}{\bar{q}S}-\frac{C_{L_q}\bar{C}}{2U_o}\right)q+\frac{m}{\bar{q}S}uq-\frac{mU_o}{\bar{q}S}p\beta\right.$$

$$\left.-C_{L_{\delta_e}}\delta_e-C_{L_{\delta_{t_e}}}\delta_{t_e}-\frac{\sin\left(\alpha_{trim}-i_{pr}\right)}{\bar{q}S}\Delta T-F\left(C_L\right)_{GE}\right]$$

$$\dot{q} = \frac{\bar{q}S\bar{C}}{I_{yy}}\left[\frac{C_{m_u}}{U_o}u+C_{m_\alpha}\alpha+\frac{C_{m_{\dot{\alpha}}}\bar{C}}{2U_o}\dot{\alpha}+\frac{C_{m_q}\bar{C}}{2U_o}q+C_{m_{\delta_e}}\delta_e+C_{m_{\delta_{t_e}}}\delta_{t_e}\right.$$

$$\left.+\frac{C_{m_{\delta_{\dot{e}}}}\bar{C}}{2U_o}\delta_{\dot{e}}+\frac{\ell_E}{\bar{q}S\bar{C}}\Delta T+F\left(C_m\right)_{GE}\right]$$

Lateral Equations

$$\dot{\beta} = \frac{\bar{q}S}{mU_o}\left[C_{y_\beta}\beta+\frac{C_{y_p}b}{2U_o}p+\left(\frac{mg}{\bar{q}S}\cos\gamma_o\right)\phi-\left(\frac{mU_o}{\bar{q}S}-\frac{C_{y_r}b}{2U_o}\right)r-\frac{m}{\bar{q}S}ru+C_{y_{\delta_r}}\delta_r+C_{y_{\delta_{t_r}}}\delta_{t_r}+C_{y_{\delta_a}}\delta_a+C_{y_{\delta_s}}\delta_s\right]$$

$$\dot{p} = \frac{\bar{q}Sb}{I_{xx}}\left[C_{\ell_\beta}\beta+\frac{C_{\ell_p}b}{2U_o}p+\frac{C_{\ell_r}b}{2U_o}r+\frac{I_{xz}}{\bar{q}Sb}\dot{r}+C_{\ell_{\delta_r}}\delta_r+C_{\ell_{\delta_{t_r}}}\delta_{t_r}+C_{\ell_a}\delta_a+C_{\ell_{\delta_{t_a}}}\delta_{t_a}+C_{\ell_{\delta_s}}\delta_s\right]$$

$$\dot{r} = \frac{\bar{q}Sb}{I_{zz}}\left[C_{n_\beta}\beta+\frac{C_{n_p}b}{2U_o}p+\frac{C_{n_r}b}{2U_o}r+\frac{I_{xz}}{\bar{q}Sb}\dot{p}+C_{n_{\delta_r}}\delta_r+C_{n_{\delta_{t_r}}}\delta_{t_r}+C_{n_{\delta_a}}\delta_a+C_{n_{\delta_{t_a}}}\delta_{t_a}+C_{n_{\delta_s}}\delta_s\right]$$

where F=1 when aircraft is in ground effect; zero otherwise

Figure 2-1. Aircraft Linearized Perturbation Equations

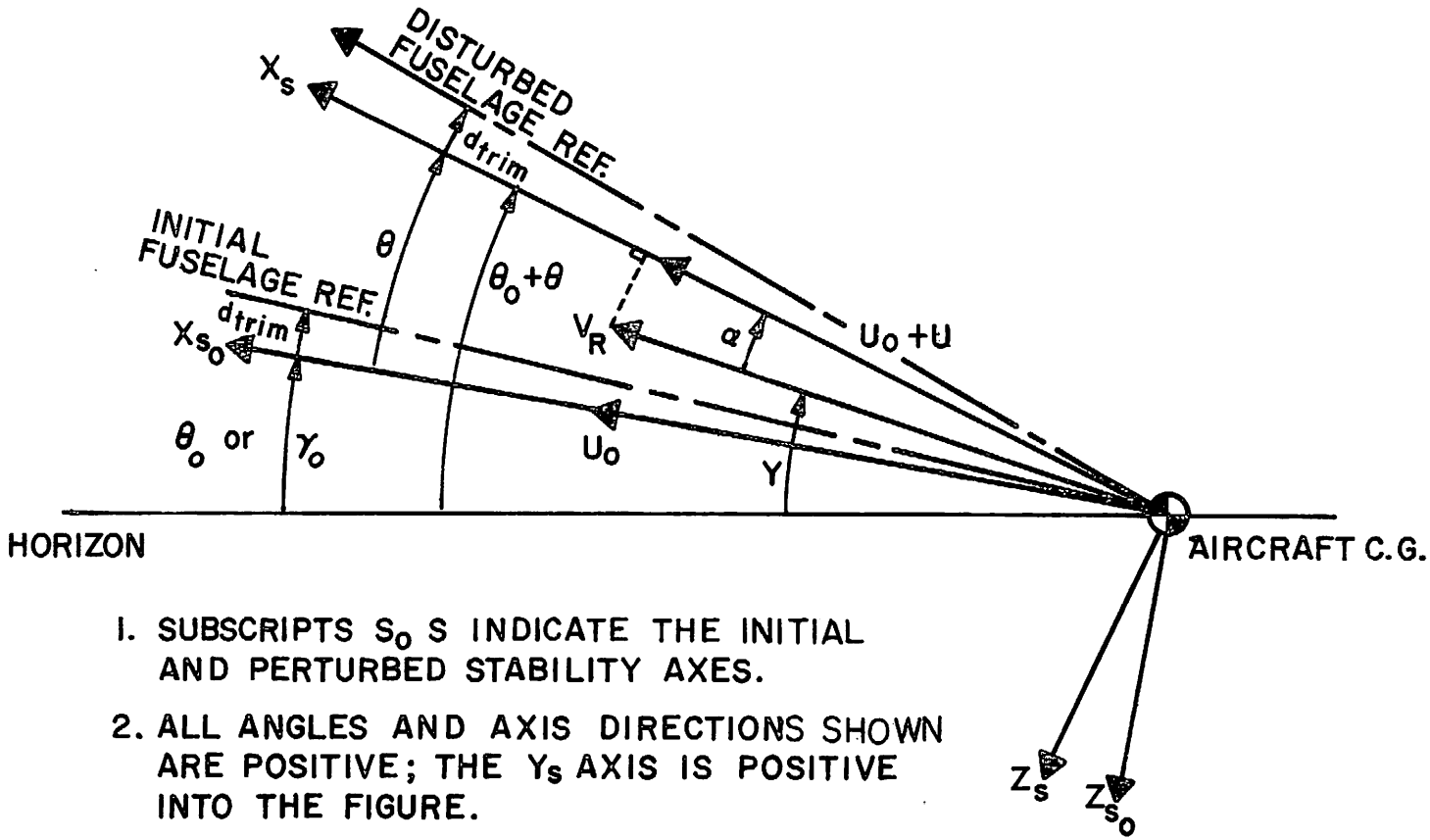

1. SUBSCRIPTS S_o S INDICATE THE INITIAL AND PERTURBED STABILITY AXES.
2. ALL ANGLES AND AXIS DIRECTIONS SHOWN ARE POSITIVE; THE Y_s AXIS IS POSITIVE INTO THE FIGURE.
3. U_o IS THE INITIAL AIRCRAFT VELOCITY VECTOR DEFINING THE INITIAL POSITION OF THE STABILITY AXES.

Figure 2-2. Initial Steady State and Disturbed Stability Axes.

TRAJECTORY EQUATIONS

The trajectory equations are written with respect to an inertial frame (E) which is earth-fixed. This coordinate frame has its origin at the center of mass of the aircraft with the X-axis pointing North, the Y-axis pointing East and the Z-axis pointing down. The equations are as follows:

$$\begin{bmatrix} \dot{x}_E \\ \dot{y}_E \\ \dot{z}_E \end{bmatrix} = \begin{bmatrix} \cos\theta \cos\psi & \sin\phi \sin\theta \cos\psi - \cos\phi \sin\psi & \cos\phi \sin\theta \cos\psi + \sin\phi \sin\psi \\ \cos\theta \sin\psi & \sin\phi \sin\theta \sin\psi + \cos\phi \cos\psi & \cos\phi \sin\theta \sin\psi - \sin\phi \cos\psi \\ -\sin\theta & \sin\phi \cos\theta & \cos\phi \cos\theta \end{bmatrix} \begin{bmatrix} U \\ V \\ W \end{bmatrix}$$

where $U = U_o + u(t)$

EULER ANGLES

The Euler angles are used to define the orientation of the vehicle with respect to a local vertical reference axis system. These angles are defined by an ordered sequence of three rotations (Ψ, θ, Φ) which rotates the local vertical reference frame into the body related stability axis system. The convention normally adopted for the Euler angles and rates is defined in figure 2-4.

The Euler angles are calculated by integrating the following equations from specified initial conditions.

$$\dot{\Theta} = q \cos \phi - r \sin \phi$$

$$\dot{\phi} = p + (q \sin \phi + r \cos \phi) \tan \Theta$$

$$\dot{\psi} = (q \sin \phi + r \cos \phi) \sec \Theta$$

Elevator: $$\ddot{\delta}_e = \left[C_{h_{e_\alpha}} \alpha + C_{h_{e_{\delta_e}}} \delta_e + C_{h_{e_{\delta_{t_e}}}} \delta_{t_e} + C_{h_{e_{\dot{\delta}_e}}} \dot{\delta}_e - \left(\frac{2I_e}{\bar{q} s_e c_e} \right) \dot{q} \right] \left[\bar{q} \frac{s_e c_e}{2I_e} \right]$$

Aileron: $$\ddot{\delta}_a = \left[C_{h_{a_\beta}} \beta + C_{h_{a_p}} p + C_{h_{a_{\delta_a}}} \delta_a + C_{h_{a_{\delta_{t_a}}}} \delta_{t_a} + C_{h_{a_{\dot{\delta}_a}}} \dot{\delta}_a \right] \left[\bar{q} \frac{s_a c_a}{2I_a} \right]$$

Rudder: $$\ddot{\delta}_r = \left[C_{h_{r_\beta}} \beta + C_{h_{r_r}} r + C_{h_{r_{\delta_r}}} \delta_r + C_{h_{r_{\delta_{tr}}}} \delta_{t_r} + C_{h_{r_{\dot{\delta}_r}}} \dot{\delta}_r - \left(\frac{2I_r}{\bar{q} s_r c_r} \right) \dot{r} \right] \left[\bar{q} \frac{s_r c_r}{2I_r} \right]$$

The gearing arrangement of the tabs introduces motion of the tab in response to the motion of the control surface as well as the motion of the servo. The equations which express these relationships are:

CONVAIR CV-880
$$\begin{cases} \delta_{te} = \delta_e - \delta_{e_s} \\ \delta_{ta} = -\delta_{a_s} \\ \delta_{tr} = \delta_r - \delta_{r_s} \end{cases}$$

BOEING 720B
$$\begin{cases} \delta_{t_e} = \delta_e - .416\ \delta_{e_s} \\ \delta_{t_a} = \delta_a - .278\ \delta_{a_s} \\ \delta_r = .263\ \delta_{r_s} \end{cases}$$

where δ_{es}, δ_{as}, δ_{rs} are the elevator, aileron, and rudder servo outputs respectively.

GROUND EFFECT

An extraordinary aerodynamic perturbation occurs when the aircraft approaches close to the ground. In this situation the ground plane inhibits the normal downward-induced flow, increasing the lifting efficiency of the aircraft. Associated with this

effect is usually a nose-down pitching moment which reduces to some extent the gain in lifting efficiency. The ground proximity effects in the longitudinal axis will have significant influence on flare performance.

Ground effect can be approximated in the following stability derivatives as:

$$C_{L_\alpha} = \left(C_{L_\alpha}\right)_{OGE} + K\left[\left(C_{L_\alpha}\right)_{IGE} - \left(C_{L_\alpha}\right)_{OGE}\right]$$

$$C_{L_q} = \left(C_{L_q}\right)_{OGE} + K\left[\left(C_{L_q}\right)_{IGE} - \left(C_{L_q}\right)_{OGE}\right]$$

$$C_{D_\alpha} = \left(C_{D_\alpha}\right)_{OGE} + K\left[\left(C_{D_\alpha}\right)_{IGE} - \left(C_{D_\alpha}\right)_{OGE}\right]$$

$$C_{M_q} = \left(C_{M_q}\right)_{OGE} + K\left[\left(C_{M_q}\right)_{IGE} - \left(C_{M_q}\right)_{OGE}\right]$$

$$C_{M_{\delta_e}} = \left(C_{M_{\delta_e}}\right)_{OGE} + K\left[\left(C_{M_{\delta_e}}\right)_{IGE} - \left(C_{M_{\delta_e}}\right)_{OGE}\right]$$

where K may be represented as a function of altitude, and wing span as shown in Figure 2-5.

The changes in the trim values of lift, drag and pitching moment are calculated as follows:

$$\left(C_D\right)_{GE} = K\left(\Delta C_D\right)_{GE}$$

$$\left(C_L\right)_{GE} = K\left(\Delta C_L\right)_{GE}$$

$$\left(C_M\right)_{GE} = K\left(\Delta C_M\right)_{GE}$$

where $(\Delta C_D)_{GE}$, $(\Delta C_L)_{GE}$ and $(\Delta C_M)_{GE}$ are given directly for the Boeing 720B aircraft.

For the Convair CV880 aircraft, the trim values are calculated as follows:

SECTION 3. CONVAIR CV-880 AIRCRAFT DATA

VEHICLE DESCRIPTION

The Convair CV-880 Aircraft is four-engine, turbojet, low wing transport with all lifting surfaces swept back 35 degrees on the 30 percent chord line. The design gross take-off weight of the airplane is approximately 178,000 pounds which includes approximately 68,000 pounds of fuel contained in the integral fuel tanks located between the front and rear wing spars. The four General Electric engines are pod mounted and suspended below and forward of the wing on highly swept pylons. The CV-880 configuration is shown in Figure 3-1.

All control surfaces are operated through servo-tabs with the exception of the spoilers which are hydraulically actuated. Lateral and directional trim is provided by tabs located on the aireron and rudder while longitudinal trim is provided by an all-movable horizontal tail. The spoilers, located on the wing upper surface, are used for both lateral control and as speed brakes. High lift type double-slotted flaps are incorporated in the wing trailing edge for use during take-off and landing. The nominal take-off flap setting is 20 degrees, while 50 degrees corresponds to the flap setting at landing. The speed brakes (spoilers) are automatically deflected 8 degrees when the flaps are extended to 50 degrees.

The aircraft trim data and parameter values are presented in Tables 3-1 through 3-4. (No engine thrust data is available.)

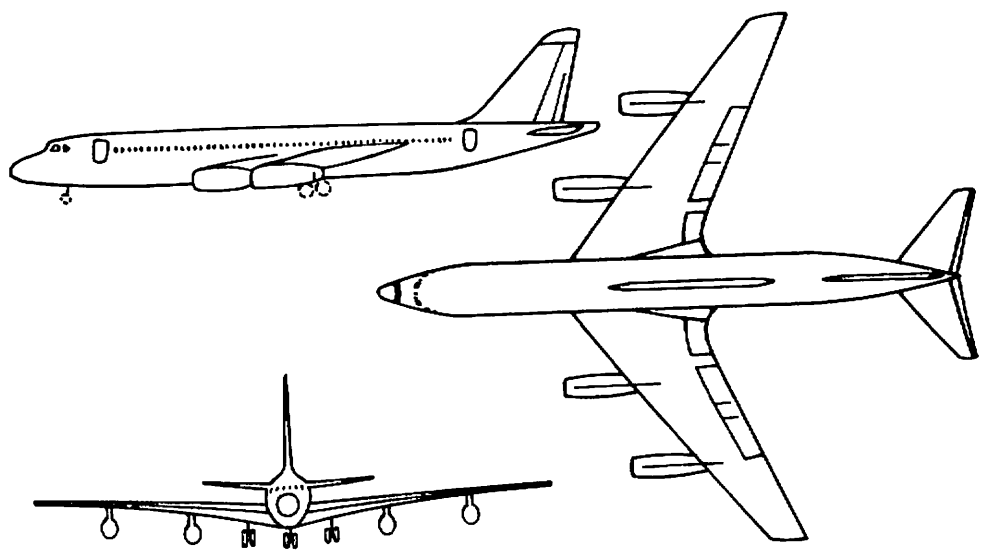

Figure 3-1 Three View Configuration of CV-880 Airplane

TABLE 3-1. PHYSICAL AND AERODYNAMIC CHARACTERISTICS CV-880 AIRCRAFT IN TRIM APPROACH CONDITION

Item	Value	Dimensions
Weight	155,000	Pounds
Mass (m)	4,845	Slugs
Center of Gravity Position (cg)	.32	% Mac
Moment of Inertia (I_x)	1,510,000	Slug-Ft^2
(I_y)	2,650,000	Slug-Ft^2
(I_z)	4,170,000	Slug-Ft^2
(I_{xz})	0	Slug-Ft^2
Landing Gear Position	Extended	
Flap Position (δ_f)	50	Degrees
Speed Brake Position (δ_S)	8	Degrees
Altitude Condition (h_{CG})	Sea Level	Ft
Velocity (U_o)	260	Ft/Sec
Air Density (ρ)	.00238	Slugs/Ft^3
Mach Number (M)	.236	-
Dynamic Pressure ($\bar{q}$)	82.5	Lbs/Ft^2
Flight Path Angle (γ_o)	0	Degrees
Angle of Zero Lift (α_{OL})	-7.50	Degrees

TABLE 3-2. MAJOR DIMENSIONS OF THE CV-880 AIRCRAFT

Item	Value	Dimensions
Wing Area (s)	2000	Ft^2
Wing Span (b)	118.32	Ft
Wing Mean Aerodynamic Chord ($\bar{c}$)	18.94	Ft
Elevator Area (S_e)	88.28	Ft^2
Elevator Chord (C_e)	2.66	Ft
Moment of Inertia of Elevator (I_e)	33.60	Slug-Ft^2
Rudder Area (S_r)	82.44	Ft^2
Rudder Chord (C_r)	4.69	Ft
Moment of Inertia of Rudder (I_r)	54.56	Slug-Ft^2
Aileron Area (S_a)	2x27.37	Ft^2
Aileron Chord (C_a)	2.96	Ft
Moment of Inertia of Aileron (I_a)	2x19.11	Slug-Ft^2
Mean Distance of Engine Thrust axis below CG (ℓ_E)	1.0	Ft
Incidence of Engine Thrust Axis (i_{pr})	0	Deg

TABLE 3-3. LONGITUDINAL NONDIMENSIONAL STABILITY DERIVATIVES

Longitudinal/Vertical Force Derivatives	Value OGE*	IGE**
α_{trim}	+4.20	+2.30
$C_{L_{trim}}$	0.939	
$C_{D_{trim}}$	0.1456	
C_{L_α}	4.62	5.51
C_{D_α}	.395	.471
C_{L_q}	6.62	6.50
$C_{L_{\delta_e}}$	0.215	
$C_{L_{\delta_{t_e}}}$	0.0538	
Pitching Moment Derivatives		
C_{m_α}	-0.381	-.259
$C_{m_{\dot{\alpha}}}$	-4.23	
C_{m_u}	0	
C_{m_q}	-11.24	-11.24
$C_{m_{\delta_e}}$	-.616	
$C_{m_{\dot{\delta}_e}}$	-0.0186	
$C_{m_{\delta_{t_e}}}$	-0.154	
Longitudinal Hinge Moment Derivatives		
$C_{h_{e_\alpha}}$	-0.042	
$C_{h_{e_{\delta_e}}}$	-0.327	
$C_{h_{e_{\dot{\delta}_e}}}$	-0.020	
$C_{h_{e_{\delta_{t_e}}}}$	-0.286	

*OGE Out of Ground Effect

**IGE In Ground Effect

TABLE 3-4. LATERAL-DIRECTIONAL NONDIMENSIONAL STABILITY DERIVATIVES

Side Force Derivatives	Value
C_{y_β}	-1.0150
C_{y_r}	0.386
$C_{y_{\delta_r}}$	0.2185
$C_{y_{\delta_{t_r}}}$	0.0454
$C_{y_{\delta_s}}$	-0.0780
$C_{y_{\delta_a}}$	0
Yawing Moment Derivatives	
C_{n_β}	0.1463
C_{n_r}	-0.2221
C_{n_p}	-0.0768
$C_{n_{\delta_r}}$	-0.0968
$C_{n_{\delta_{t_r}}}$	-0.01864
$C_{n_{\delta_a}}$	0.01862
$C_{n_{\delta_s}}$	0.0258
Rolling Moment Derivatives	
C_{ℓ_β}	-0.2360
C_{ℓ_r}	0.2807
C_{ℓ_p}	-0.3850
$C_{\ell_{\delta_r}}$	0.0231
$C_{\ell_{\delta_{t_r}}}$	.00280
$C_{\ell_{\delta_a}}$	-0.0324
$C_{\ell_{\delta_{t_a}}}$	-.00468
$C_{\ell_{\delta_s}}$	0.0782

TABLE 3-4 (CONT). LATERAL-DIRECTIONAL NONDIMENSIONAL STABILITY DERIVATIVES

Hinge Moment Derivatives	Value
$C_{h_{r_{\delta_r}}}$	-0.2135
$C_{h_{r_\beta}}$	-0.0732
$C_{h_{r_r}}$	-0.0131
$C_{h_{r_{\delta_{t_r}}}}$	-0.2532
$C_{h_{r_{\dot{\delta}_r}}}$	-0.04025
$C_{h_{a_{\delta_a}}}$	-0.6070
$C_{h_{a_{\delta_{t_a}}}}$	-0.2490
$C_{h_{a_{\dot{\delta}_a}}}$	-0.0244
$C_{h_{a_\beta}}$	-0.0140
$C_{h_{a_p}}$	-0.0188

AUTOPILOT DESCRIPTION

This section presents a description of the Convair CV-880 autopilot for approaches as it has been simulated. This autopilot provides four axis of control - pitch, roll, yaw and speed control.

HEADING HOLD MODE

A block diagram of the heading hold mode configuration is illustrated in Figure 3-2. In this mode a reference or selected heading is maintained by commanding bank angle as a function of lagged heading select error. The bank angle is limited to ±28 degrees by a bank command (i.e. lagged heading select error) limiter. Bank angle error which commands roll rate, is in turn limited to ±15 deg/sec. (maximum allowable roll rate for structural considerations is approximately 45 deg/sec. at all gross weights).

To force the aircraft to track the selected heading on a steady state basis, a low-gain integrator is used to supplement the lagged heading select error.

The roll axis is interlocked with the yaw axis in that operation of any roll axis mode requires engagement of the yaw stabilization system. A block diagram of the yaw axis during heading select operation is included in Figure 3-3. Washed-out yaw rate is used to command rudder tab deflection to provide dutch roll damping.

ALTITUDE HOLD MODE

A block diagram of the altitude hold mode configuration is included in Figure 3-4. In this mode reference barometric altitude is maintained by commanding pitch attitude as a function of altitude error. The aircraft short period damping is augmented by washed-out pitch rate from the pitch rate gyro. A structural mode filter operates on the net elevator tab command signal to attenuate aircraft structural mode motions sensed by the pitch rate gyro (and normal accelerometer in other modes).

LOCALIZER CAPTURE MODE

A block diagram of the localizer capture mode is included in Figure 3-2. The localizer is captured when the absolute value of the algebraic sum of localizer output and 49 times the band-passed localizer output ($49\hat{\eta}L$) is less than 100 microamps (μA). During this mode the sum of lagged course error and straight gain localizer provides a bank command (through a bank command limiter) to the bank angle error loop. The course error

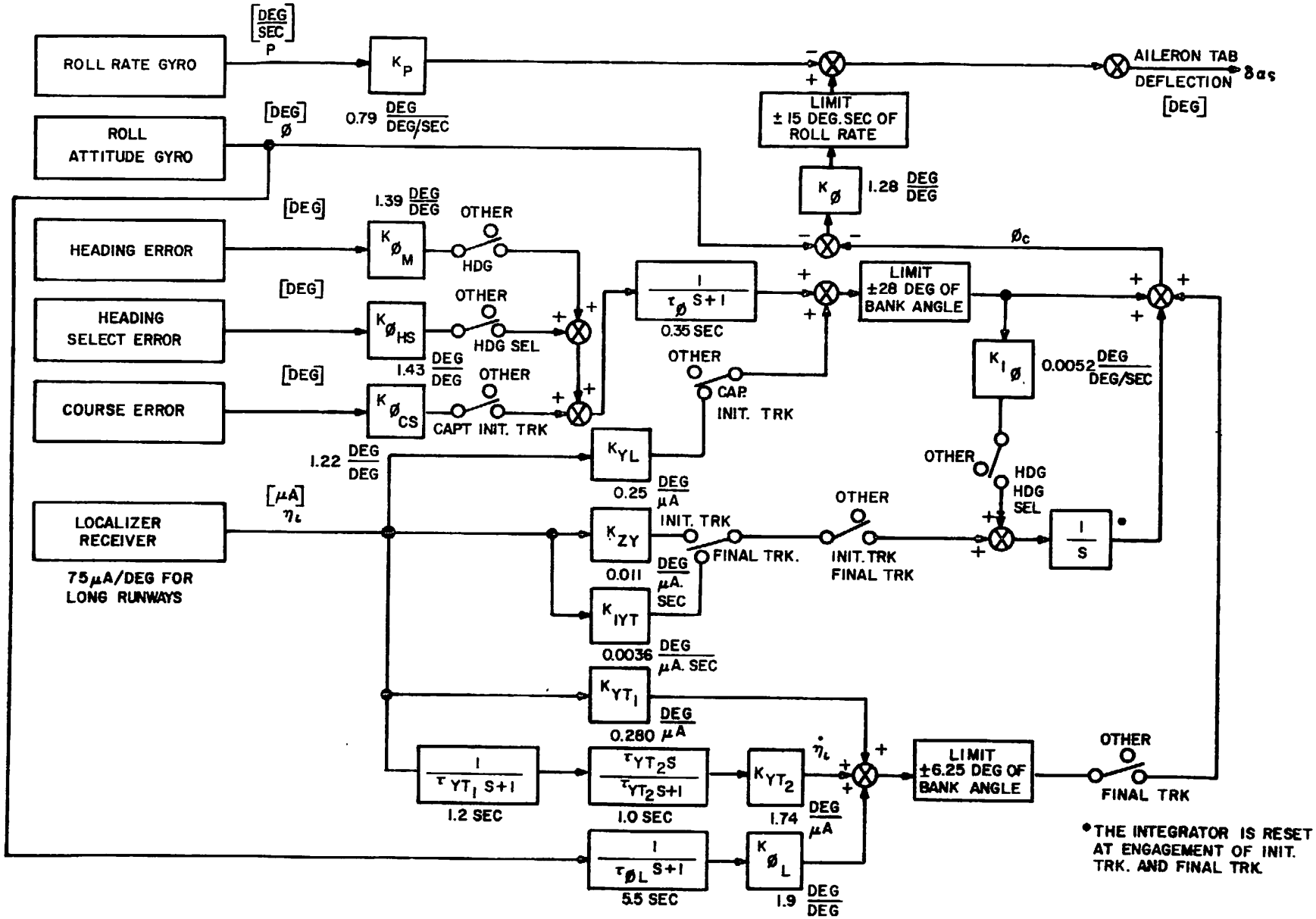

Figure 3-2. Block Diagram - Roll Axis.

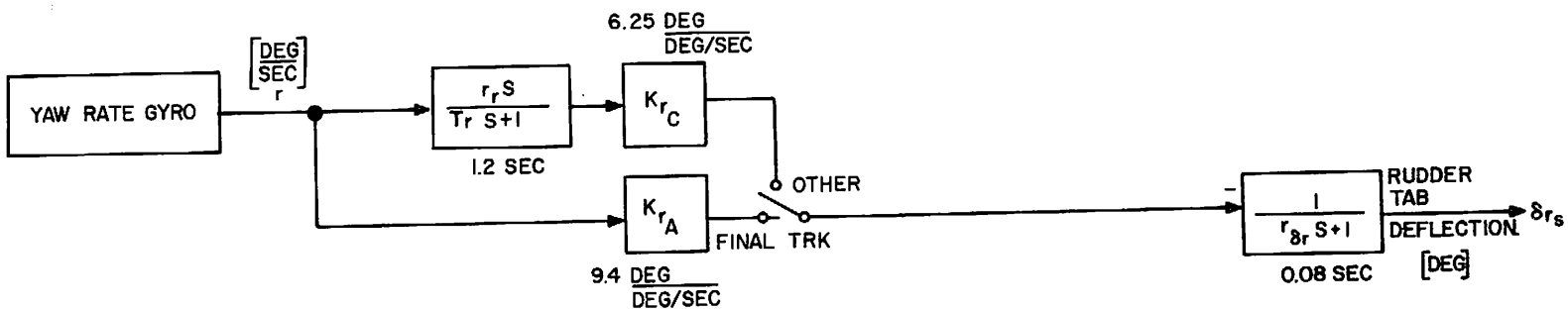

Figure 3-3. Block Diagram - Yaw Axis.

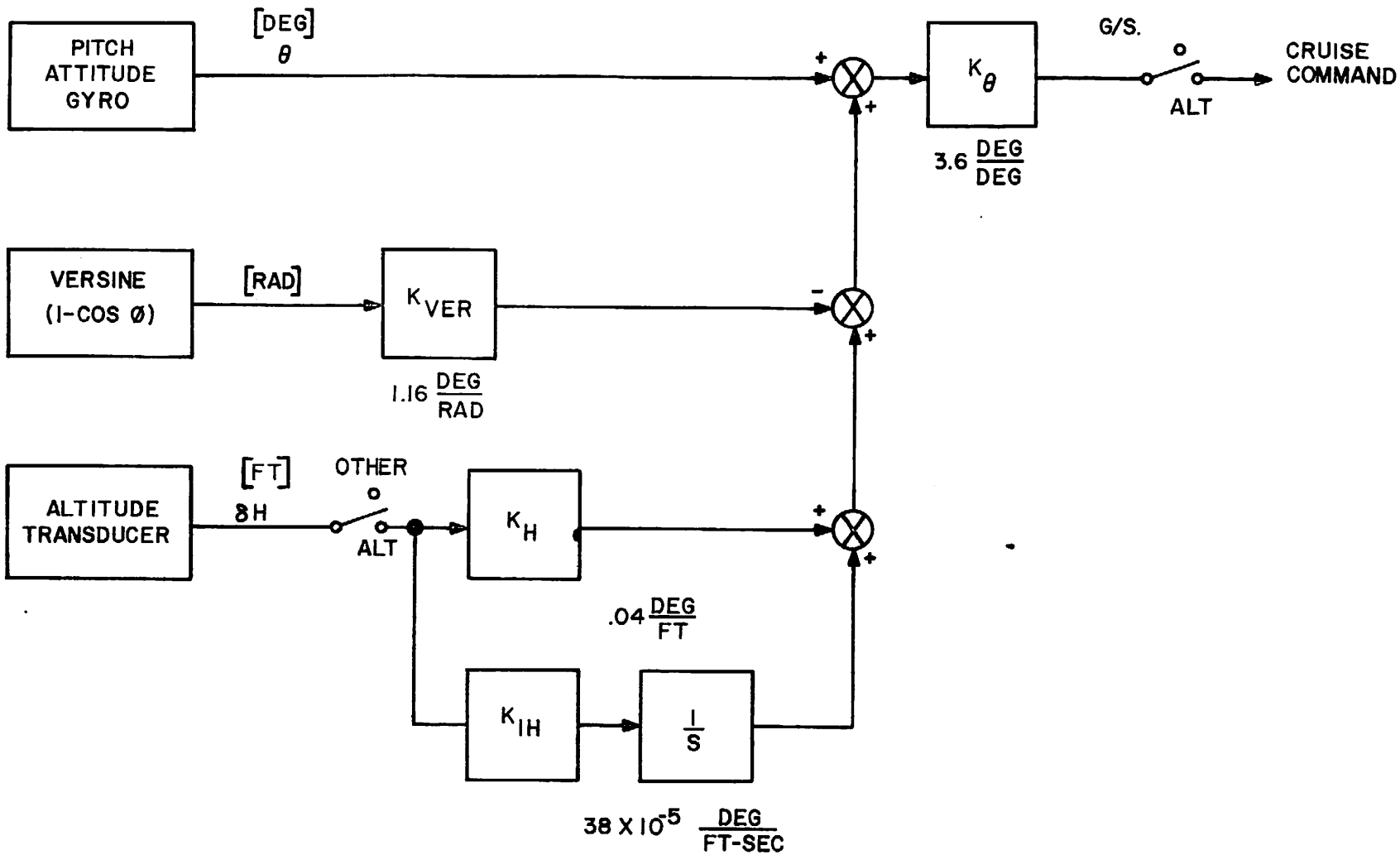

Figure 3-4. Block Diagram - Pitch Axis, Cruise Modes.

signal, being proportional to lateral rate, provides lateral damping and the straight gain localizer signal provides lateral position information during beam acquisition in this mode.

The yaw axis configuration remains the same as during heading select operation (as shown in Figure 3-3).

LOCALIZER INITIAL TRACK MODE

A block diagram of the localizer initial track mode is included in Figure 3-2. The control system will switch to the initial track mode when the bank angle is less than ±6 degrees and the localizer output is less than 73 μA. In this mode the sum of straight gain localizer, integrated localizer and lagged course angle commands error bank angle to cause the aircraft to track the localizer. At the onset of initial track the localizer integrator output is reset to zero. The difference between this mode and capture is the addition of the localizer integrator which drives the localizer steady error to zero.

The yaw axis configuration remains the same as during heading select operation (as shown in Figure 3-3).

FINAL TRACK MODE

The final track mode is engaged when glideslope track occurs. The final track designation is used to denote the status of roll and yaw axes. The final track mode roll axis configuration is shown in Figure 3-2.

In this mode the bank command signal, ϕ_c, is the sum of lagged bank angle, straight gain localizer, bandpassed localizer and integrated localizer signals. The localizer integrator output is reset to zero at the onset of final track. Lagged bank angle and bandpassed localizer constitute pseudo beam rate damping terms. The localizer integrator forces the localizer error to zero in the absence of windshear.

The yaw axis configuration for the final track mode is shown in Figure 3-3. In this mode the washed-out yaw rate is replaced by straight gain yaw rate feedback to achieve better dutch roll damping during final track.

GLIDESLOPE TRACK MODE

A block diagram of the glideslope track mode is included in Figure 3-5. In the glideslope track mode the elevator tab command signal is composed of the following:

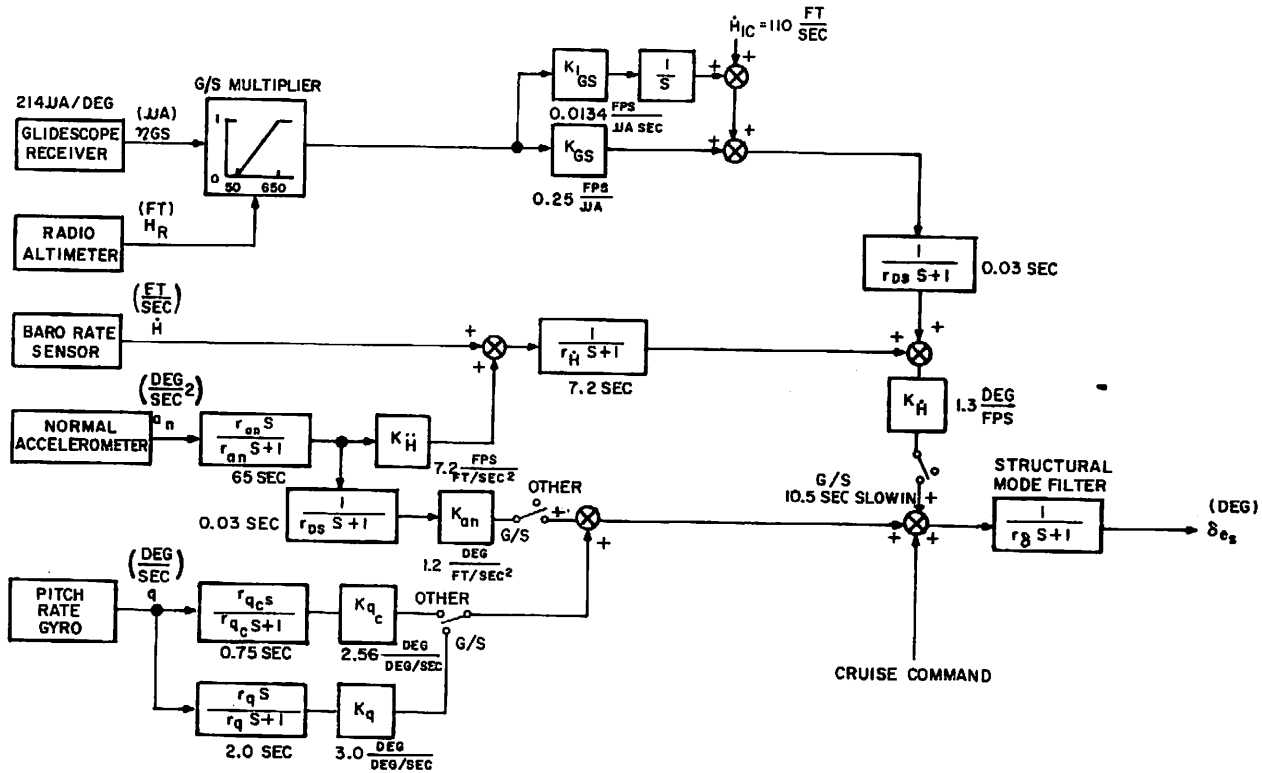

Figure 3-5. Block Diagram - Pitch Axis, Glideslope.

SECTION 4. BOEING 720-B AIRCRAFT DATA

VEHICLE DESCRIPTION

The Boeing 720-B aircraft is a four engine, low-wing, jet airliner with approximately 35° sweep at 25 percent chord. The maximum take-off gross weight is 221,000 pounds which includes approximately 74,000 pounds of fuel. It is powered by four Pratt and Whitney turbojets mounted on pylons below the wing. A configuration of the 720-B aircraft is shown in Figure 4-1.

Primary flight controls are operated through spring-tabs. Lateral control at low speeds is provided by outboard and small inboard ailerons supplemented by two hydraulically operated spoilers on each wing which are interconnected with the ailerons. At high speeds, lateral control is by inboard ailerons and spoilers only. Operations of the double-slotted flaps adjusts the linkage between the inboard and outboard ailerons to permit outboard operation only with extended flaps. With this condition, only outboard aileron stability derivatives are given. Spoilers may be used symmetrically as speed brakes. Maximum flaps deflection is 50°

The aircraft trim data and parameter values are presented in Tables 4-1 through 4-5. The available engine thrust data is given in Figures 4-2 through 4-8.

1) Washed-out pitch rate for short period damping.
2) Highpassed normal acceleration for frequency augmentation.
3) Blended altitude rate to present an altitude rate command system to the glideslope signal.

During glideslope track, the net tab command signal goes through a structural mode filter to attenuate the structural mode motions sensed by the pitch rate gyro and the normal accelerometer.

The glideslope track mode is automatically engaged when the glideslope receiver output reduces to approximately 22 μA. At approximately the same time the auto-throttle is manually engaged. A block diagram of the auto-throttle is shown in Figure 3-6. The auto-throttle uses washed-out pitch attitude and lagged airspeed error to position the throttles and control airspeed. The sum of washed-out attitude and lagged airspeed error positions the throttles through a proportional plus integral servo which forces the airspeed error to zero in steady state.

TABLE 4-1. PHYSICAL AND AERODYNAMIC CHARACTERISTICS 720-B AIRCRAFT IN TRIM APPROACH CONDITION

Item		Value	Dimension
Weight		185,000	lbs
Mass (m)		5751	Slugs
Center of Gravity Position		.25	% Mac
Moment of Inertia	(I_x)	(')	Slug-Ft^2
	(I_y)	(')	Slug-Ft^2
	(I_z)	(')	Slug-Ft^2
	(I_{xz})	(')	Slug-Ft^2
Landing Gear Position		Extended	-
Flap Position	(δ_f)	50	Deg.
Speed Brake Position	(δ_s)	0	Deg.
Altitude Condition	(h_{cg})	1500	Ft.
Velocity	(U_o)	226	Ft/sec
Air Density	(ρ)	.00227	Slug/Ft^3
Mach Number	(M)	.208	-
Dynamic Pressure	($\bar{q}$)	58.1	Lbs/Ft^2
Flight Path Angle	(γ_o)	0	Deg.
Angle of Zero Lift	(α_{o_L})	-8.5	Deg.
(') Data not available			

TABLE 4-2. MAJOR DIMENSIONS OF THE 720-B AIRCRAFT

Item		Value	Dimension
Wing area	(s)	2433	Ft^2
Wing Span	(b) ,	130.83	Ft
Wing mean aerodynamic chord	($\bar{C}$)	20.16	Ft
Elevator area	(S_e)	118	Ft^2
Elevator chord	(C_e)	2.72	Ft
Moment of inertia of elevator	(I_e)	(')	$Slug\text{-}Ft^2$
Rudder area	(S_r)	102	Ft^2
Rudder chord	(C_r)	(')	Ft
Moment of inertia or rudder	(I_r)	(')	$Slug\text{-}Ft^2$
Aileron area (outboard)	(S_a)	2x19.4	Ft^2
Aileron area (inboard)	(S_a)	2x39.8	Ft^2
Aileron chord (outboard)	(C_a)	2.09	Ft
Aileron chord (inboard)	(C_a)	2.9	Ft
Moment of inertia of aileron	(I_a)	(')	$Slug\text{-}Ft^2$
Mean distance of engine thrust axis below CG	(ℓ_e)	2.28	Ft
Incidence of engine thrust axis	(i_{pr})	0	Degrees
(') Data not available			

TABLE 4-3. LONGITUDINAL NONDIMENSIONAL STABILITY DERIVATIVES

	Value OGE*	IGE**
Longitudinal/Vertical Force Derivatives		
α_{trim}	+6.3	(')
$C_{L_{trim}}$	1.31	
$C_{D_{trim}}$	.211	
C_{L_α}	5.04	(')
C_{D_α}	.598	(')
C_{L_q}	(')	(')
$C_{L_{\delta_e}}$	.229	
$C_{L_{\delta_{t_e}}}$	(')	
Pitching Moment Derivatives		
C_{m_α}	-.963	(')
$C_{m_{\dot{\alpha}}}$	-4.84	
C_{m_u}	-.005	
C_{m_q}	-13.5	(')
$C_{m_{\delta_e}}$	-.742	
$C_{m_{\dot{\delta}_e}}$	(')	
$C_{m_{\delta_{t_e}}}$	(')	
Longitudinal Hinge Moment Derivatives		
$C_{h_{e_\alpha}}$	(')	
$C_{h_{e_{\delta_e}}}$	-.189	
$C_{h_{e_{\dot{\delta}_e}}}$	(')	
$C_{h_{e_{\delta_{t_e}}}}$	-.316	

(') Data not available

*OGE Out of Ground Effect

**IGE In Ground Effect

TABLE 4-4. LATERAL-DIRECTIONAL NONDIMENSIONAL STABILITY DERIVATIVES

Side Force Derivatives	Value
C_{y_β}	-1.04
C_{y_r}	.485
$C_{y_{\delta_r}}$	.226
$C_{y_{\delta_{t_r}}}$	(included in $C_{y_{\delta_r}}$)
$C_{y_{\delta_s}}$	(')
$C_{y_{\delta_a}}$	0
Yawing Moments Derivatives	
C_{n_β}	.183
C_{n_r}	-.24
C_{n_p}	-.122
$C_{n_{\delta_r}}$	-.092
$C_{n_{\delta_{t_r}}}$	(included in $C_{n_{\delta_r}}$)
$C_{n_{\delta_a}}$	0
$C_{n_{\delta_s}}$	.0004
Rolling Moment Derivatives	
C_{ℓ_β}	-.272
C_{ℓ_r}	.37
C_{ℓ_p}	-.385
$C_{\ell_{\delta_r}}$	.032
$C_{\ell_{\delta_{t_r}}}$	(')
$C_{\ell_{\delta_a}}$	-.064
$C_{\ell_{\delta_{t_a}}}$	.0114
$C_{\ell_{\delta_s}}$	.043

(') Data not available

TABLE 4-6. MODE DEFINITION

Mode	Definition
Non-Select	Attitude Hold (pitch and roll) control via attitude command switches which cause attitude command to change at a fixed rate.
Manual	Heading Hold (at engagement value) pitch attitude hold with control via pitch attitude command switch.
Manual, Alt. Hold	Heading and Altitude Hold (at engagement values).
Localizer	Automatic tracking of the localizer beam. Pitch attitude hold with control via pitch attitude command switch.
Localizer, Alt. Hold	Automatic tracking of the localizer beam. Altitude hold at the engagement value.
Localizer, Alt. Hold, GS AUTO	Automatic tracking of the localizer beam. Altitude hold at the engagement value until acquisition of the glide slope beam at which time glide slope tracking commences.
Localizer, GS MAN	Automatic tracking of the localizer beam. Glide slope tracking commences immediately upon selection of GS MAN.
GS MAN	Roll attitude hold with control via roll attitude command switch. Glide slope tracking commences immediately upon selection of GS MAN.

In the yaw channel, dutch roll damping is augmented by using a washed-out yaw rate signal to command a rudder deflection. A block diagram of the yaw channel is included in Figure 4-11.

MANUAL

Selection of the MANUAL mode affects the operation of the roll channel. The pitch and yaw channels are unaffected. In this mode the autopilot maintains the heading of the aircraft at the engagement value by commanding a bank angle as a function of the heading error. The bank angle is limited to ±35 degrees by a bank angle command limiter. To force the aircraft to track the desired heading on a long term basis, a low-gain integrator is used to supplement the heading error signal. A block diagram of this mode is included in Figure 4-9.

Interlocking logic precludes the selection of the LOCALIZER, GS AUTO, or GS MAN modes when the MANUAL mode is selected.

LOCALIZER

Selection of the LOCALIZER mode affects the operation of the roll channel. A block diagram of the LOCALIZER mode is included in Figure 4-9. Once selected the LOCALIZER mode can only be activated if the absolute value of the localizer error signal is less than a preset constant whose value was not specified in Reference (2). Should the error signal subsequently exceed this value, the LOCALIZER mode will automatically deactivate. Since there seems to be nothing in the system (either heading or pseudo velocity) that would prevent the undesirable S-turn maneuver during localizer capture, it is assumed that capture must be performed by the pilot either with the roll command switch or with the autopilot disengaged. After the beam has been captured, the pilot can then select the LOCALIZER mode to permit automatic beam tracking.

In this mode the sum of the straight gain localizer error, a preset course signal, and the integrated localizer error generate the bank angle command to cause the aircraft to track the localizer beam.

The integration of the localizer error signal is only permitted as long as the absolute value of the error is less than Γ_R (0.267 degrees). The purpose of the preset course signal and its value are unclear. During this mode the bank angle command is limited to ±30 degrees by a bank angle command limiter until 60 seconds after the glide slope track mode is engaged at which time the limit level is reduced to ±17 degrees.

There seems to be no provision in the autopilot design for any type of path damping (lagged roll angle, heading error, or differentiated localizer error) which is necessary for system stability. It is assumed that some form of heading error is probably used to provide path damping although this was not apparent from the material in Reference (2).

A desensitization gain is included in the localizer error signal path. This gain decreases with decreasing altitude to counteract the effect of the increasing sensitivity of the localizer error signal as the aircraft approaches the localizer antenna.

ALTITUDE HOLD

A block diagram of the altitude hold mode is included in Figure 4-10. In this mode the autopilot maintains the altitude of the aircraft (at the engagement value) by commanding a pitch attitude as a function of altitude error. The aircraft short period damping is augmented by a washed-out pitch rate signal. The aircraft is forced to track the engagement altitude in steady state by a low-gain integrator which operates on the altitude error. This same integrator is used during glideslope track as well as during altitude hold.

If the GS AUTO mode has also been selected, the autopilot will automatically switch to the GS track mode when the centerline of the glideslope beam is crossed. If the GS MAN mode is selected by the pilot while the system is in ALTITUDE HOLD, the autopilot will disengage altitude hold and engage the GS track mode.

GLIDESLOPE TRACK MODE

The glideslope track mode can be engaged either automatically by selecting GS AUTO or manually by selecting GS MAN. If GS AUTO has been selected by the pilot, he must have also selected LOCALIZER for automatic activation of GS track. Generally ALTITUDE HOLD is also selected with GS AUTO. In this case, when the aircraft crosses the centerline of the glideslope beam, the GS track mode will automatically be activated and the altitude hold mode will be disengaged. If the pilot chooses to engage GS track manually, he may select GS MAN. In this case the GS track mode will be activated immediately and if it has been engaged the altitude hold mode will disengage.

In the GS track mode the elevator servo command is the sum of washed-out pitch rate, pitch angle, and straight gain and integrated glideslope error signals. The washed-out pitch rate is used to augment the aircraft's short period damping. A Block diagram of the GS track mode is included in Figure 4-10.

During GS tract, the roll angle command signal is fed to the yaw channel to improve the localizer beam tracking performance.

REFERENCES

1. STC Document RPT-608, November 1970: Performance Evaluation of the Lateral Axis of a Conventional and an Inertially Augmented Automatic Landing System.

2. Hughes document 2732.50/147, April 1965: Transport Approach and Landing Simulator: Aircraft and Autopilot Simulation.

3. Boeing Document D6-1154-7: Aerodynamic Data for the 720B Flight Simulator. (A supplement to D6-1154.)

4. Boeing Document D6-9850: Airplane Data for Automatic Pilot Design, Boeing Model 720B.

5. Etkin, B.: Dynamics of Flight. John Wiley & Son.