Report No. CDOT-DTD-91-8

USE OF FLY ASH IN STRUCTURAL CONCRETE

Dave Woodham
Colorado Department of Transportation
4201 East Arkansas Avenue
Denver, Colorado 80222

Final Report
July, 1991

Prepared in cooperation with the
U.S. Department of Transportation
Federal Highway Administration

The contents of this report reflect the views of the author who is responsible for the facts and the accuracy of the data presented herein. The contents do not necessarily reflect the official views of the Colorado Department of Highways or the Federal Highway Administration. This report does not constitute a standard, specification, or regulation.

Technical Report Documentation Page

1. Report No. CDOT-DTD-R-91-8	2. Government Accession No.	3. Recipient's Catalog No.
4. Title and Subtitle Use of Fly Ash in Structural Concrete		5. Report Date July, 1991
		6. Performing Organization Code
7. Author(s) Dave Woodham		8. Performing Organization Rpt. No. CDOT-DTD-R-91-8
9. Performing Organization Name and Address Colorado Department of Highways 4201 E. Arkansas Avenue Denver, Colorado 80222		10. Work Unit No. (TRAIS)
		11. Contract or Grant No. DTFH71-85-59-CO-13
12. Sponsoring Agency Name and Address Colorado Department of Highways 4201 E. Arkansas Avenue Denver, Colorado 80222		13. Type of Rpt. and Period Covered Final Report
		14. Sponsoring Agency Code

15. Supplementary Notes
Prepared in Cooperation with the U.S. Department of Transportation, Federal Highway Administration

16. Abstract

Limited data has been gathered on the performance of two bridge structures built in 1986 using fly ash concrete. Fly ash was used as a replacement for 15% of the cement in the mix. The use of fly ash caused several problems including: inconsistent setting, a rough and open surface texture, variable air and slump measurements, and shrinkage cracking. Most of these problems have been resolved due to increased knowledge of how fly ash works in concrete mixes and addtional experience with the product.

Implementation
No changes to the current CDOT specifications, which allows contractors to substitute up to 20% fly ash (by weight), are proposed as the result of this research.

17. Key Words Fly ash, Concrete Bridge Decks	18. Distribution Statement No Restrictions: This report is is available to the public through the National Information Service, Springfield, Virginia 22161

19. Security Classif. (of this report)	20. Security Classif. (of this page)	21. No. of Pages	22. Price
Unclassified	Unclassified	29	

Table of Contents

Introduction 1

Background 1

Monitoring 3

Conclusions 4

Implementation 5

Appendices

Appendix A. Photographs of the Bridges.

Appendix B. Concrete Mix Designs.

Introduction

In 1986, three bridges were constructed using concrete containing fly ash under Demonstration Project 59, The Use of Fly Ash in Structural Concrete. A fourth structure was constructed using CDOT's standard class of structural concrete as a control. This Demonstration Project was designed to give states the opportunity to use fly ash on a highway project with technical and financial help from the Federal Highway Administration. The benefits of using fly ash in concrete include: increased strength, reduced alkali-silica reactions, and reduced cost of the mix.

This report discusses the performance of the structures during the past five years. A previously published report [1] describes the construction of the four structures and comments on the problems and anomalies observed.

Background

The four structures covered under this study were all constructed on route C-470 southwest of Denver (please see Figure 1). There were two sets of twin structures constructed-two over Kipling St. and two over Ken Caryl Rd. All structures were built in 1985 and 1986. Photographs of the structures are shown in Appendix A.

The Kipling structures were opened to traffic in the summer of 1986 while the two bridges at Ken Caryl were opened to traffic in October of 1990.

Fly ash was required in all concrete used at the Kipling St. structures and was optional for the two bridges at Ken Caryl. However, the contractor chose to use fly ash on one of the Ken Caryl structures as well. The contractor used fly ash as a replacement for 15% of the cement in the concretes. Colorado Class D mix is typically used in bridge decks with Class B mix being used in piers and abutments. The girders used for the bridges were of precast, pre-stressed concrete. Complete mix designs are shown in Appendix B.

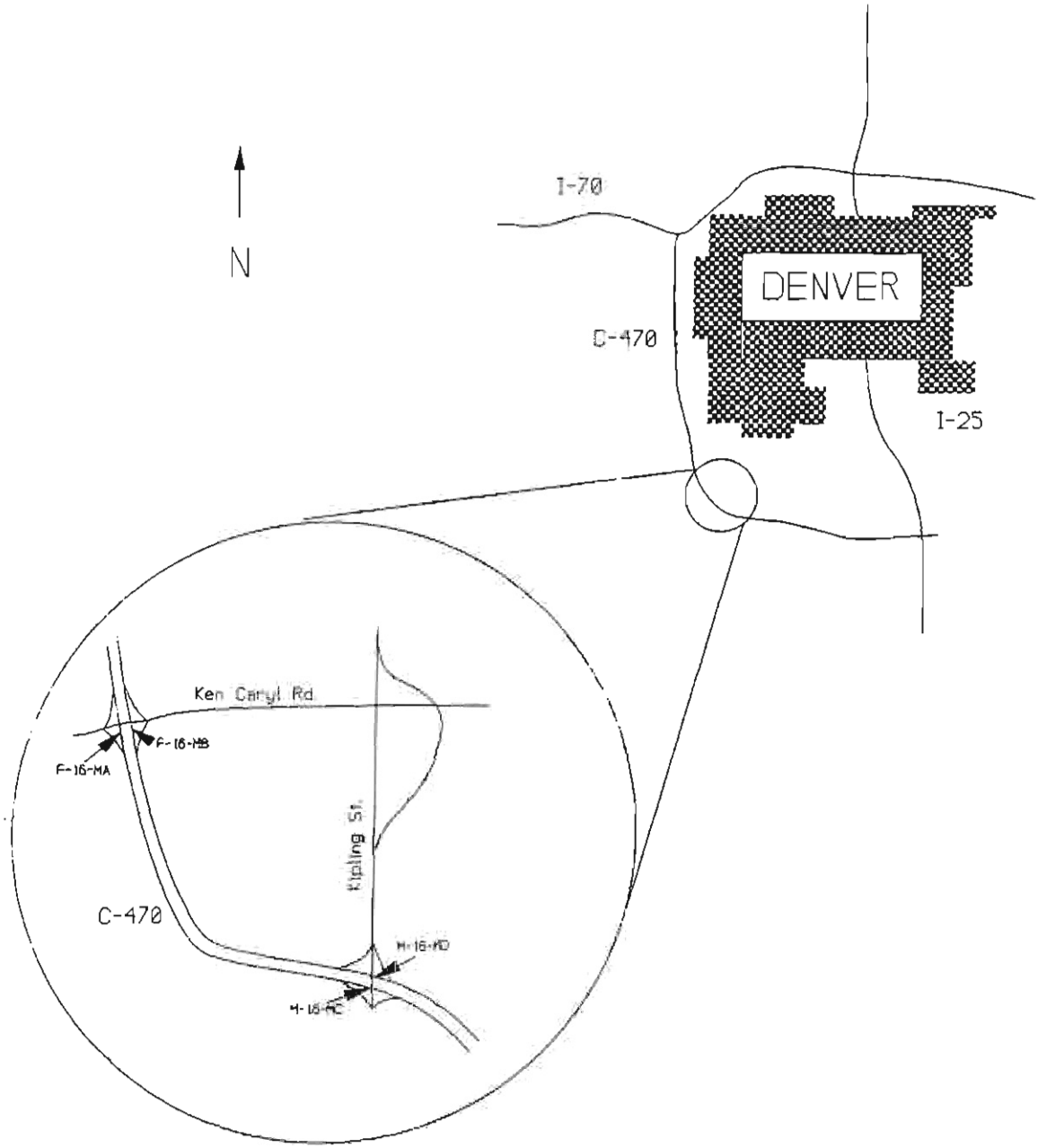

FIGURE 1. LOCATION OF STRUCTURES

The structures and mix designs are given below for clarification:

Structure	Feature Intersected	Type of concrete
F-16-MA	Ken Caryl Rd. (EB)	Class D & B w/ Fly Ash
F-16-MB	Ken Caryl Rd. (WB)	Class D & B no Fly Ash
F-16-MC	Kipling St. (EB)	Class D & B w/ Fly Ash
F-16-MD	Kipling St. (WB)	Class D & B w/ Fly Ash

A total of 54.2 tons of fly ash were used in place of cement on the Kipling St. structures. Given the cost difference between cement and fly ash ($78.00 vs. $30.90 per ton) in 1986, the use of fly ash saved some $2,550 [1] in material costs on this project.

Energy savings of 394 million BTU [1] were also realized due to the use of fly ash on the two Kipling St. bridges. In other terms, this amount of energy is roughly equivalent to that contained in 3,200 gallons of gasoline.

Monitoring

Problems during placement of the fly ash mixture included: inconsistent setting, a rough and open surface texture, variable air and slump measurements, as well as shrinkage cracking.

Since the two structures at Kipling St. were covered with a membrane and asphalt overlay shortly after construction, monitoring of the structures consisted of looking for signs of cracking and efflorescence from the bottom side of the structure.

The parallel structures at Ken Caryl were finished in the spring of 1986 but were not opened to traffic until fall of 1990. The Ken Caryl bridges were located at the end of the Phase II construction and were not connected to the roadway until the final phase of C-470 was completed. Since these structures did not carry traffic until over four years later than the Kipling structures, comparisons between the two sets of structures are not meaningful at this time. Visual observations of the Kipling St. structures have not shown signs of deterioration.

Conclusions

The use of fly ash has the potential for cost savings in highway construction. Given the cost difference between cement and fly ash of approximately $47 per ton in 1986, the savings amounts to $2.35 per cubic yard for class D or $2.00 per cubic yard for class B concretes. Both these figures are on the order of 1% of the in-place costs for these concretes [2].

Current prices in the metropolitan-Denver area are approximately $63 per ton for cement and $36.90 for fly ash. Given this cost difference of $26.10 and a maximum replacement of 20% of the cement, the cost savings (per ton) are potentially $1.70 for class D or $1.50 for class B concretes.

The net savings in energy use as a result of using fly ash is dependent on the location of the fly ash source in relation to the project. If haul distances are too great both the energy and cost advantages of fly ash will be reduced.

One additional benefit of using fly ash (in any manner) is the reduction in volumes of ash that must be disposed of. This recycling aspect will most likely become more important as many landfills are reaching capacity and new landfills face public opposition and increased costs.

The use of fly ash created problems with workability and a quality finish on this project. However, many of the problems experienced during the construction of these bridges in 1986 have been resolved due to an increased knowledge of how fly ash works in concrete mixes and additional experience with the product.

Implementation

The use of fly ash up to 20% by weight of cement is currently at the contractor's option in CDOT work. Those contractors confident in their ability to produce a consistent fly ash concrete mix routinely use it as a replacement for up to 20% of the cement specified in the mix design. On the other hand, some contractors have decided that the cost savings as a result of using fly ash are not worth the possibility of rejected truckloads.

No changes to the current specifications are proposed as a result of this study.

References:

[1] Swanson, Herbert, The Use of Fly Ash in Structural Concrete, Demonstration Project No. 59, Design and Construction Report, Colorado Report No. CDOH-DTP-R-86-12, July, 1986

[2] 1985 Cost Data, Compiled by the Cost Estimates Squad of the Staff Design Branch, Colorado Department of Highways

APPENDIX A

PHOTOGRAPHS OF THE BRIDGES

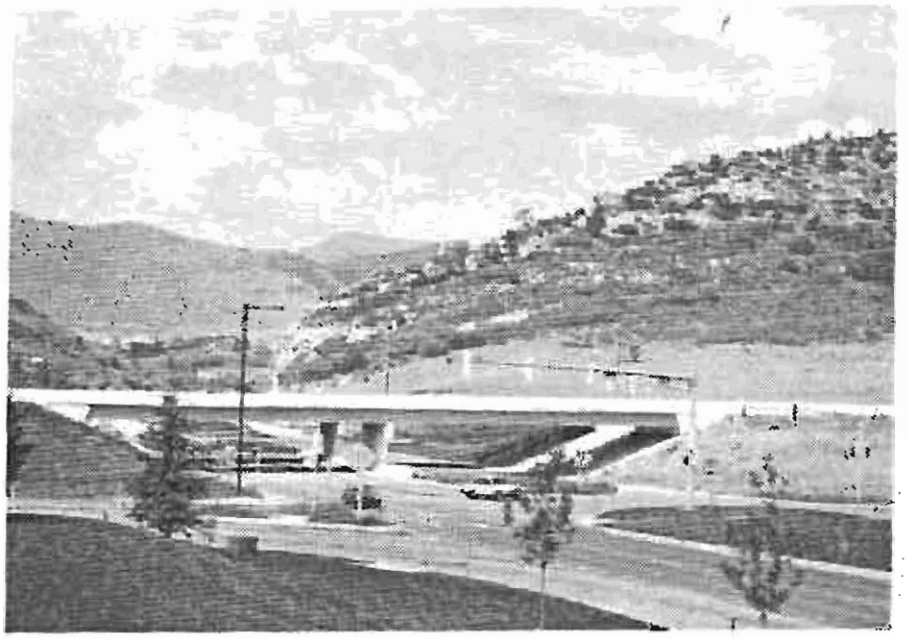

Photograph 1. Overall view of twin structures at Ken Caryl Rd.

Photograph 2. View of underside of deck. Ken Caryl Rd.

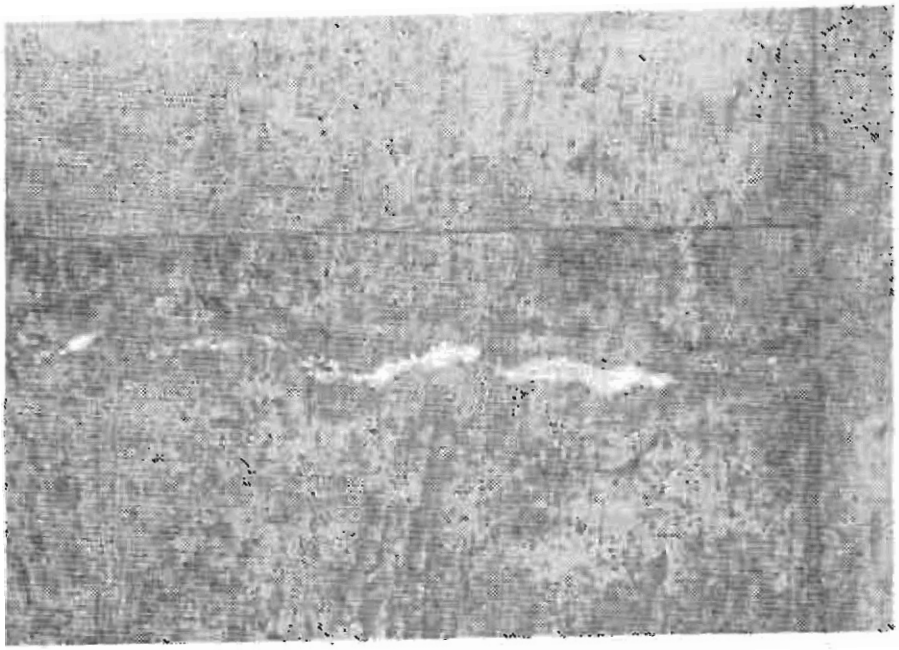

Photograph 3. Slight efflorescence on underside of deck. Ken Caryl Rd.

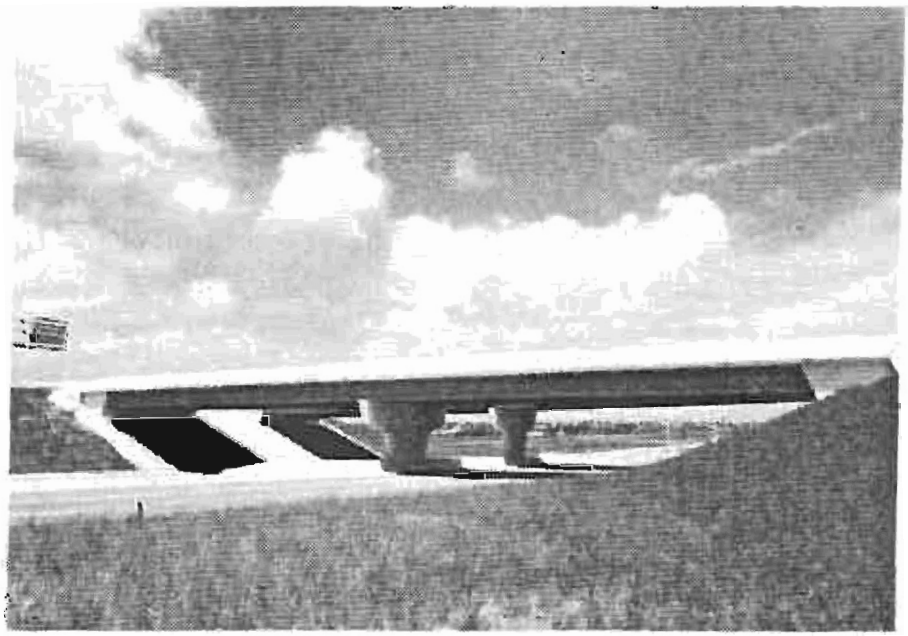

Photograph 4. Overall view of twin structures at Kipling St.

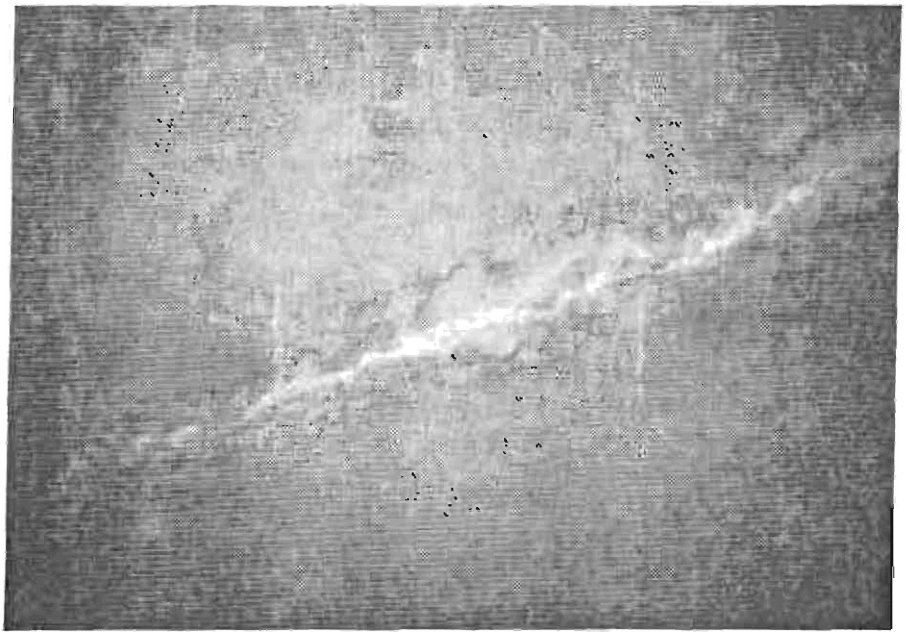

Photograph 5. Mild efflorescence on underside of deck. Kipling St.

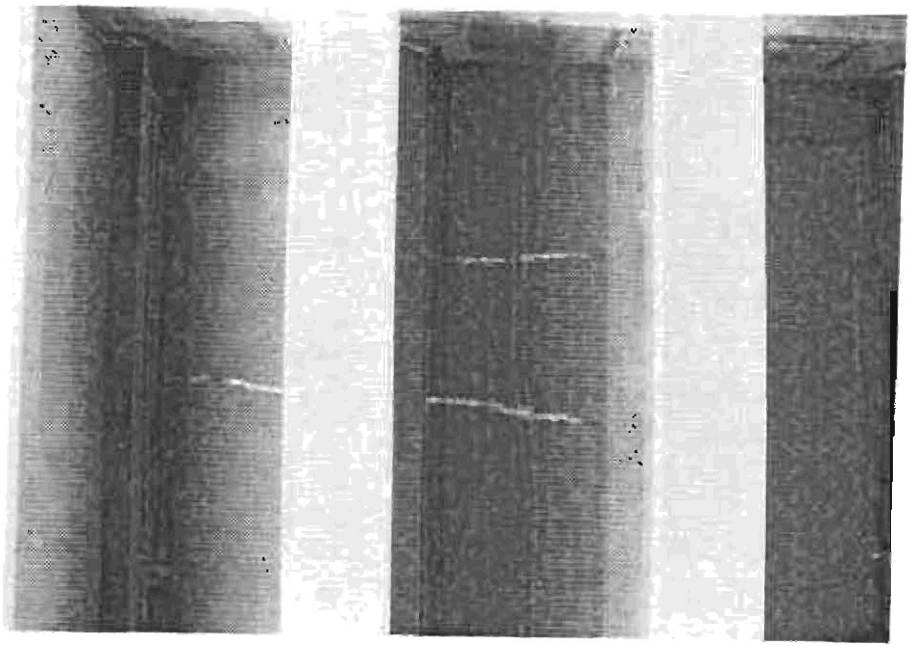

Photograph 6. Small cracks are visible in deck. Kipling St

APPENDIX B

CONCRETE MIX DESIGNS

TABLE 601-1

CONCRETE CLASSES with Field Compressive Strength and Brief Description		CONCRETE SPECIFICATIONS					
		Cement (Lbs./cu. yd.)	Maximum Water/Cement Ratio (lbs. H^2O/lb of Cement)	Air Content % Range (Total)	Maximum Slump (Inches)	Coarse Aggregate Section 703, Table 703-(Size No.)	Fine Aggregate (Maximum % of Total Aggregate)
A 1½" Aggregate	3000 Psi	565	0.50	4-8	4	467	45%
AX Local Aggregate	4000 Psi	610	0.45	5-8	3	See Gradation in subsection 601.03	
AZ 1½" Aggregate	4000 Psi	610	0.45	5-8	4	467	45%
B ¾" Aggregate	3000 Psi	565	0.53	5-8	4	67	50%
BZ ¾" Aggregate	4000 Psi	610	0.48	5-8	4	67	50%
D Deck	4500 Psi	660	0.44	5-8	2.5 (Design) 3.25 (Field)	67	50%
DT Deck Topping	4500 Psi	700	0.44	5-9	2.5	7	50%
DX Local Aggregate Deck	4500 Psi	660	0.44	5-8	2.5 (Design) 3.25 (Field)	See Gradation in subsection 601.03	
EA Exposed Aggregate	3000 Psi	685	0.53	5-8	4	6 or 67	40%
P Pavement	3000 Psi	565	0.50	4-8	3	467 or 357	45%
S Prestressed	specified on plans	660	--	specified on plans	--	--	--

STATE OF COLORADO
DEPARTMENT OF HIGHWAYS
DIVISION OF HIGHWAYS
DOH Form No. 330
Revised: August, 1982

Project IXFU 470-1(36)
Location Kipling at C-470
Sand Field Sheet No. 25294
Gravel Field Sheet No. Same

PAGE 2

Class of Concrete		SFA	DFA		
% Fine Agg. by Absolute Vol.		41	44		
Air Entraining Agent		Protex A.E.S	Same		
Quantity of Air Entraining Agent (ozs)		5.0	4.5		
Admixture		Prokrete-N	Same		
Quantity of Admixture (ozs)		14.0	20.0		
Cement: Source So. Dakota Type I					
Cement South Dakota	Lbs.	480	560		
Fly Ash Wheatland	Lbs. Cl. 'C'	85	100		
Fine Aggregate	Lbs.	1250	1285		
Intermediate Aggregate	Lbs.	1800	1625		
Coarse Aggregate	Lbs.	0	0		
Miscellaneous Aggregate	Lbs.	0	0		
Water	Lbs.	260	270		
Water	Gals.	31.2	32.6		
Slump	Inches	1.75	-		
Water Cement Ratio (% by Weight)		.460	.411		
Cement Factor (CWT per Yard)		(1) 5.7	(1) 6.6		
Gals/CWT		4.7	4.9		

WEIGHT PER CU. FT. OF CONCRETE:

T. Theoretical (calculated-air free)		150.0		
C. Theoretical (calculated NS % air)		(2) 142.5		
W. Determined (actual Wt./cu.ft.)	144.0	142.1		
Air Content Air Meter (Total Air)	5.5	5.4		
Air Content - Gravimetric Method % A = $\frac{T - W}{T}$ X 100		5.3		

NS=Not Shown
(1) Cementitious
(2) 5% Air Design

7 days				
Compressive Strength (P.S.I.)	4460	4580		
	4260	4540		
Average	4360	4560		
28 days				
Compressive Strength (P.S.I.)	5810	5830		
	5730	5750		
Average	5770	5790		

NOTE: Quantities shown for admixtures are for information only.

REMARKS: Trial mixes run under project I 76-1(90)(100); the class SFA mix is proportioned identical to the required class DFA this project and meets CDOH design criteria. District 6 Materials has concurred on these changes. 3.25" maximum slump to be used on the class DFA.

cc: District 6
Brasher-Motchan
Ihlanfeldt
R.E. (2)
jc: 10/18/85

Stuart C. Tapp
STATE MATERIALS ENGINEER
Staff Materials Engineer