Report No. CDOT-DTD-94-6

Implementation of a Fine Aggregate Angularity Test

Tim Aschenbrener
Colorado Department of Transportation
4201 East Arkansas Avenue
Denver, Colorado 80222

Final Report
April 1994

Prepared in cooperation with the
U.S. Department of Transportation
Federal Highway Administration

The contents of this report reflect the views of the author who is responsible for the facts and the accuracy of the data presented herein. The contents do not necessarily reflect the official views of the Colorado Department of Transportation or the Federal Highway Administration. This report does not constitute a standard, specification, or regulation.

Acknowledgements

The author would like to express his gratitude to the 19 asphalt paving contractors that participated in this study by providing the aggregates for testing. The laboratory testing was performed by Gray Currier and Cindi Moya (CDOT-Staff Materials).

The CDOT Research Panel provided many excellent comments and suggestions for the study; it included Byron Lord and Kevin Stuart (FHWA-Turner Fairbank Highway Research Center), Doyt Bolling (FHWA-Region 8), Jerry Cloud (FHWA-Colorado Division), Steve Horton and Bob LaForce (CDOT-Staff Materials), Ken Wood (CDOT-Region 4 Materials), and Donna Harmelink (CDOT-Research). Scott Shuler (CAPA) also provided many valuable comments.

Technical Report Documentation Page

1. Report No.	2. Government Accession No.	3. Recipient's Catalog No.
CDOT-DTD-R-94-6		

4. Title and Subtitle	5. Report Date
Implementation of a Fine Aggregate Angularity Test	April 1994
	6. Performing Organization Code
7. Author(s)	8. Performing Organization Rpt.No.
Tim Aschenbrener	CDOT-DTD-R-94-6
9. Performing Organization Name and Address	10. Work Unit No. (TRAIS)
Colorado Department of Transportation 4201 E. Arkansas Ave. Denver, CO. 80222	11. Contract or Grant No.
12. Sponsoring Agency Name and Address	13. Type of Rpt. and Period Covered
Colorado Department of Transportation 4201 E. Arkansas Ave. Denver, CO. 80222	Final Report
	14. Sponsoring Agency Code

15. Supplementary Notes

Prepared in Cooperation with the U.S. Department of Transportation Federal Highway Administration

16. Abstract

Both the contractors and Colorado Department of Transportation have had frustrations with the specification used to limit natural fine aggregates. The angularity of manufactured and natural fine aggregates needs to be more clearly defined for contractual purposes. The purpose of this report is to develop a specification and implementation plan for quantitatively defining manufactured and natural fine aggregates.

Two methods were investigated: the AASHTO TP3 and French P18-564 methods. Results from the two tests provided comparable rankings of the individual stockpiles and blended natural and manufactured fine aggregates tested in this study. The AASHTO TP3 is recommended because of sample preparation time. Specifications to limit the natural fine aggregates in quantitative manner and an implementation plan were developed.

17. Key Words		18. Distribution Statement
Fine Aggregates	NAA Flow Test	No Restrictions: This report is available to the public through the National Technical Info. Service. Springfield, VA 22161
Angularity	Natural Sands	

19.Security Classif. (report)	20.Security Classif. (page)	21. No. of Pages	22. Price
Unclassified	Unclassified	61	

Table of Contents

1.0 Introduction 1

2.0 Fine Aggregate Angularity Tests 2
- 2.1 AASHTO TP3 (The National Aggregate Association Test) 2
- 2.2 French P 18-564 4
  - 2.2.1 The French Method 4
  - 2.2.2 Modifications for This Study 6

3.0 Previous Studies and Recommended Specifications 7
- 3.1 Kandhal (*5*) 7
- 3.2 Mogawer and Stuart (*6*) 7
- 3.3 Aschenbrener (*7*) 8
- 3.4 SHRP 8

4.0 Test Results and Discussion 10
- 4.1 AASHTO TP3 10
  - 4.1.1 Individual Stockpiles 10
  - 4.1.2 Combined Blends 10
  - 4.1.3 Calculating vs. Testing Combined Blends 14
- 4.2 French P 18-564 15
  - 4.2.1 Individual Stockpiles 15
  - 4.2.2 Combined Blends 15
  - 4.2.3 Calculating vs. Testing Combined Blends 18
- 4.3 Comparison of the AASHTO TP3 and French P 18-564 Methods 18
  - 4.3.1 Correlation of Test Results 18
  - 4.3.2 Time of Preparation 20
  - 4.3.3 Other Considerations 20
- 4.4 Recommended Specification Values 21

5.0 Repeatability 23

6.0 Implementation 24
- 6.1 Implementation Plan for Projects 24
  - 6.1.1 1994 Construction Season 24
  - 6.1.2 1995 Construction Season 24
- 6.2 Draft Specification 25
- 6.3 Other Modifications Necessary 25

7.0 Conclusions 26

Appendices

Appendix A: AASHTO TP3
Appendix B: French Tentative Standard P 18-564

List of Tables

Table 1. Summary of Previous Studies Using AASHTO TP3, Method A. 7
Table 2. Minimum Uncompacted Voids (%) Specified by SHRP. 9
Table 3. Summary of Fine Aggregate Angularities. 11
Table 4. Comparison of Measured and Calculated Results of Combined Fine Aggregates. 14
Table 5. Correlation of AASHTO TP3 and French P 18-563 Methods. 20
Table 6. Recommended Specification Values for AASHTO TP3. 21

List of Figures

Figure 1. The AASHTO TP3 Angulometer. 3
Figure 2. Schematic of the AASHTO TP3 Angulometer. 3
Figure 3. Schematic of the French Angulometer. 5
Figure 4. Ranked Order Plot of Uncompacted Voids (%) of Individual Stockpiles Using AASHTO TP3. 12
Figure 5. Ranked Order Plot of Uncompacted Voids (%) of Blends using AASHTO TP3. 13
Figure 6. Ranked Order Plot of Flow Time of Individual Stockpiles Using French P 18-564. 16
Figure 7. Ranked Order Plot of Flow Time of Blends Using French P 18-564. 17
Figure 8. Comparison of Flow Time from the French P 18-564 with the Uncompacted Voids from AASHTO TP3. 19

Implementation of a Fine Aggregate Angularity Test

Tim Aschenbrener

1.0 Introduction

Rutting of a hot mix asphalt (HMA) pavement is primarily related to aggregate structure and secondarily related to asphalt cement stiffness. One of the key components of the aggregate structure is the angularity of the fine aggregate. The angularity is often referred to as the particle shape and surface texture.

The Federal Highway Administration's (FHWA's) Technical Advisory T 5040.27 (*1*) recommends limiting the natural fine aggregates by the weight of the total aggregate blend to 15% through 25% depending on traffic. Since the 1990 construction season, the Colorado Department of Transportation (CDOT) has limited natural fine aggregates to a maximum of 20%.

Although limiting natural fine aggregates is believed to have improved the performance of the HMA pavements in Colorado, the specification has been contested. First, it is not easy to define a natural fine aggregate. Some fine aggregates are close to their parent rock and have not weathered; the natural fine aggregate is actually quite angular. In other instances, contractors have placed large quantities of fine aggregates through a crusher that must have been turned off. The "manufactured" fine aggregates appear no more angular than the natural fine aggregates. Second, not all manufactured fine aggregates have the same angularity. When using highly angular manufactured fine aggregates, perhaps 20% natural fine aggregates would be acceptable. However, when using the marginal, less-angular fine aggregates, perhaps 0% natural fine aggregates should be allowed. Currently, the blend of the manufactured and natural fine aggregates is not considered.

Both the contractors and CDOT have had frustrations with the specification. The angularity of manufactured and natural fine aggregates needs to be more clearly defined for contractual purposes. The purpose of this report is to develop an implementation plan and specification for quantitatively defining manufactured and natural fine aggregates.

2.0 Fine Aggregate Angularity Tests

Numerous tests exist to measure the particle shape and surface texture of fine aggregates. Some of the tests include:

1) ASTM D 3398, Standard Test Method for Index of Aggregate Particle Shape and Texture;
2) ASTM D 3080, Direct Shear Test;
3) the National Aggregate Association's Methods A, B, and C, (now referred to as AASHTO TP3);
4) the National Sand and Gravel Association Test (*2*);
5) Michigan's fine aggregate angularity test (*3*); and
6) the French P 18-564, Determining the Flow Coefficient of Sand (*4*).

Only the AASHTO TP3, Method A, and the French P 18-564 methods were investigated for implementation.

2.1 AASHTO TP3 (The National Aggregate Association Test)

The National Aggregate Association (NAA) has developed a test to objectively quantify the angularity of fine aggregates. The NAA test was used to develop the draft AASHTO TP3 entitled "Standard Test Method for Uncompacted Void Content of Fine Aggregate (As Influenced by Particle Shape, Surface Texture, and Grading)". The test procedure is included in Appendix A. The angulometer is shown in Figure 1 and a schematic is shown in Figure 2.

Fine aggregates flow freely into a 100-mL copper cylinder. By knowing the bulk specific gravity of the fine aggregate, G_{sb}, and the weight of fine aggregate in the cylinder of known volume, the uncompacted void content can be calculated. Very angular fine aggregates will have high uncompacted voids, and more rounded fine aggregates will have low uncompacted voids.

The draft AASHTO TP3 includes Methods A, B, and C. Method A was used for this study. In Method A, a standard gradation is always tested by combining a pre-determined quantity of individual sieve fractions from a typical fine aggregate sieve analysis (AASHTO T 27). In Method B, individual sieve sizes are tested separately. In Method C, the "as-received" gradation is tested.

Figure 1. The AASHTO TP3 Angulometer.

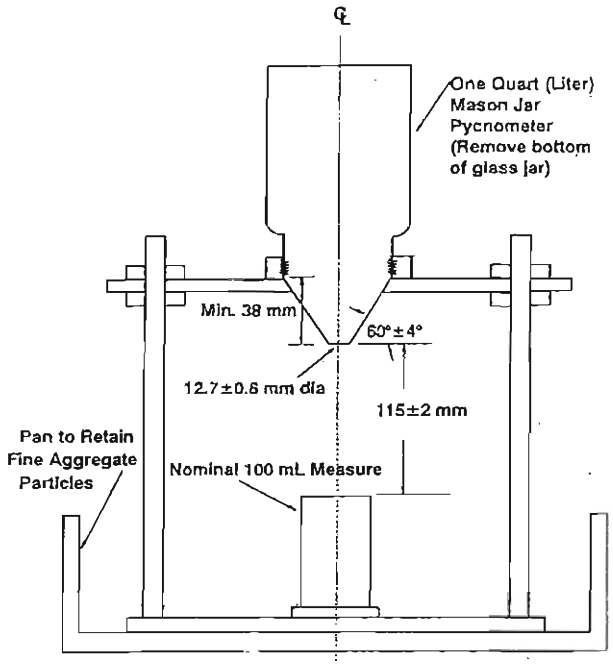

Section Through Center of Apparatus

Figure 2. Schematic of the AASHTO TP3 Angulometer.

The size of sample required for the test is always 190 grams. In Method A, the size of the fine aggregate tested is between the 2.36 mm (No. 8) sieve and the 0.150 mm (No. 100) sieve. In Method B, the size of the fine aggregate tested is between the 2.36 mm (No. 8) sieve and the 0.300 mm (No. 50) sieve. In Method C, the fine aggregate tested is passing the 4.75 mm (No. 4) sieve.

The uncompacted voids are measured for 2 determinations. The result is the average of the 2 determinations reported to the nearest tenth.

Method A was used for this study. Method A is preferred over Method B because of preparation time. All of the fine aggregate can be determined by preparing one sample. Three samples, each of different sizes, must be prepared to use Method B. Method A is preferred over Method C because the influence of gradation on the uncompacted voids is not a factor. Method A requires one standard gradation for all tests.

2.2 French P 18-564

2.2.1 The French Method

The French Method P 18-564 entitled "Determining the Flow Coefficient of Sand" is included in Appendix B. A schematic of the angulometer is shown in Figure 3. Aggregates flow freely through an orifice. The time required for 1000 grams of fine aggregate to flow through the orifice is recorded. The faster the fine aggregates flow through the orifice, the less angular the material.

The "as-received" gradation is tested. Two different sizes of samples are allowed. The fine aggregates passing the 4.75 mm (No. 4) sieve are tested with an orifice that has a 16-mm diameter opening, or the fine aggregates passing the 2.36 mm (No. 8) sieve are tested with an orifice that has a 12-mm diameter opening. Five determinations of flow time are made, and the time is recorded to the nearest tenth of a second for each determination. The final result is the average time reported to the nearest second.

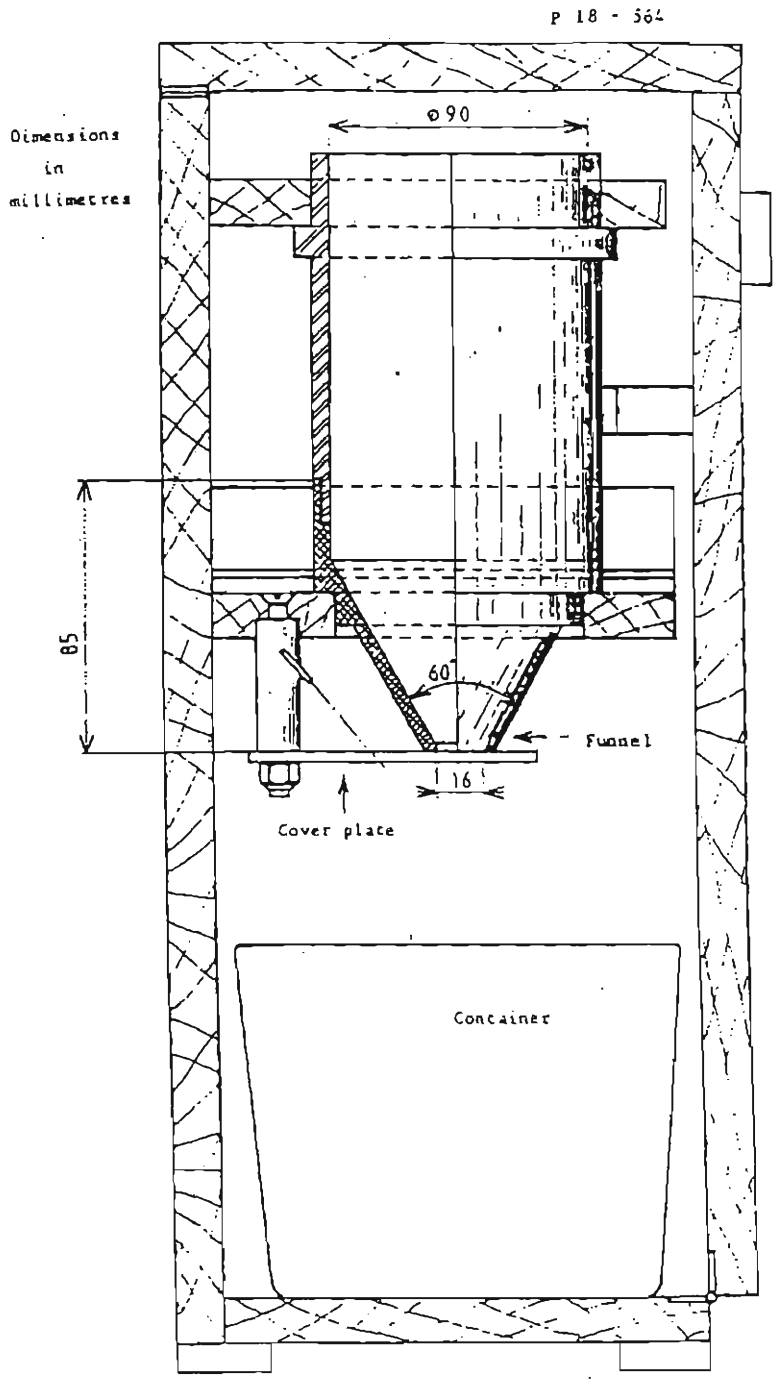

Figure 3. Schematic of the French Angulometer.

The French have no specifications for the results. The results are only used an indication of the fine aggregates ability to resist rutting. If the flow time is less than 35 to 37 seconds then there exists a risk that there will be a problem with rutting. When the flow time is short, the French rutting tester is used to provide the final acceptance of the proposed HMA.

2.2.2 Modifications for This Study

The "as-received" gradation was not used for this study. Since changes in gradation are known to influence the uncompacted void content, samples were tested using one standard gradation. The gradation used was selected to be the same as recommended in AASHTO TP3. The entire fine aggregate passed the 2.36 mm (No. 8) sieve and was retained on the 0.150 mm (No. 100) sieve. The quantity of material tested remained at 1000 grams as stated in the procedure.

As stated in the procedure, five determinations were taken for each fine aggregate and the time was recorded to the nearest tenth of a second. These measurements were remarkably similar. For this study the average of the five determinations was reported to the nearest tenth of a second, even though it is normally reported to the nearest whole second.

3.0 Previous Studies and Recommended Specifications

Previous studies by Kandhal (*5*), Mogawer (*6*), and Aschenbrener (*7*) have investigated the use of the NAA fine aggregate angularity test (now referred to as AASHTO TP3) with natural and manufactured fine aggregates. The results are summarized in Table 1. The most rounded and most angular fine aggregate tested in each study is listed in Table 1. Additionally, each author's recommended cutoff to delineate between natural and manufactured fine aggregates is included in Table 1. These studies all reported test results from single aggregate stockpiles; blends of natural and manufactured fine aggregates were not tested.

Table 1. Summary of Previous Studies Using AASHTO TP3, Method A.

	Uncompacted Voids (%)		
	Kandhal (*5*)	Mogawer (*6*)	Aschenbrener (*7*)
Most Rounded	40.2	40.1	41.2
Most Angular	52.0	50.7	50.4
Cutoff Between Round vs. Angular	44.5	43.4	44.0

3.1 Kandhal (*5*)

A study was performed on 18 fine aggregates from various sources throughout Pennsylvania. The natural fine aggregates had an average uncompacted voids of 42.5%. The manufactured fine aggregates had an average uncompacted voids of 48.1%. An uncompacted void level of 44.5% differentiated between the angularity of manufactured and natural fine aggregates.

The AASHTO TP3, Method A, was found to correlate very well with the accurate but time consuming ASTM D 3398.

3.2 Mogawer and Stuart (*6*)

Tests were performed on 12 fine aggregates from Maryland, New Jersey, Virginia, and Wisconsin. Using the AASHTO TP3, Method A, the "poor quality natural sands" had an average uncompacted voids of 41.7%, the "good quality natural sands" had 45.6%, and the "manufactured

sands" had 47.2%. An uncompacted void level of 43.4% separated the good and poor quality natural fine aggregates.

The AASHTO TP3, Method A, was found to correlate very well with the accurate but time consuming ASTM D 3398.

3.3 Aschenbrener (*7*)

A study was performed on 25 fine aggregates from the 17 most commonly used aggregate sources in Colorado. Manufactured fine aggregates were tested from 6 quarries and 11 sand and gravel pits; natural fine aggregates were tested from 8 of the sand and gravel pits. Fine aggregates obtained from quarries had an average uncompacted void content of 49.2%. Fine aggregates manufactured from sand and gravel pits had an average uncompacted void content of 46.6%. The natural fine aggregates from sand and gravel pits had an average uncompacted void content of 43.4%. The cutoff used to distinguish between natural and crushed fine aggregates was 44.0%.

It was interesting to note that three of the eight natural fine aggregates had angularities greater than the cutoff. These sands are close to their parent rock and have not weathered extensively. On the other hand, two of the "manufactured" fine aggregates were less than the cutoff. These "manufactured" fine aggregates were not processed in a quality manner.

3.4 SHRP

SHRP has recommended the use of AASHTO TP3, Method A. The specified values should be applied to the blend of fine aggregates proposed for use in HMA. SHRP specified values of uncompacted voids (*8*) as a function of traffic and depth of the pavement layer from the surface as shown in Table 2. Traffic is defined as the traffic in the design lane for the design life. For roads with less than 3 million design ESALs, it appears that 100% natural fine aggregates are acceptable for surface mixtures.

Table 2. Minimum Uncompacted Voids (%) Specified by SHRP.

Traffic, ESALs	Uncompacted Voids (%)	
	Depth from Surface	
	< 100 mm	> 100 mm
$< 3 \times 10^5$	-	
$< 1 \times 10^6$	40	-
$< 3 \times 10^6$	40	40
$< 1 \times 10^7$	45	40
$< 3 \times 10^7$	45	40
$< 1 \times 10^8$	45	45
$>3 \times 10^8$	45	45

Although the SHRP recommendations appear very low, it should be noted that there are two significant differences in the SHRP specification. The SHRP gradation is coarser than the CDOT Master Range and has a restricted zone. The coarser gradation allows for a smaller percentage of fine aggregate. The restricted zone may prevent the use of some natural fine aggregates. Additionally SHRP has a minimum requirement for the air voids at the initial number of gyrations, N_{init}, on the SHRP Gyratory Compactor. These two differences might limit the natural fine aggregates further than the angularity requirement.

4.0 Test Results and Discussion

Contractors from around Colorado submitted 19 HMA mixtures that were commonly used on CDOT projects. These mixtures were designed using variable laboratory compactive efforts and tested for strength using the Hveem stabilometer and the French rutting tester (*9*). The summary of test results on the fine aggregates using the AASHTO TP3 and the French P 18-564 methods is shown in Table 3.

In some cases, the contractors submitted HMA mixtures with no natural fine aggregate. These are indicated with "None" in the "Nat." column of Table 3. In some cases, we had a shortage of material and were unable to perform the fine aggregate angularity tests. These are indicated with "NT", not tested, in Table 3.

4.1 AASHTO TP3

4.1.1 Individual Stockpiles

The uncompacted voids have been plotted in ranked order in Figure 4. Some of the sites are listed twice because the contractor used a natural fine aggregate stockpile and a manufactured fine aggregate stockpile. The delineation between natural and manufactured fine aggregates appears to be at an uncompacted void level of 45.0%. There are 3 natural fine aggregates that have higher uncompacted voids than 45.0%. In each of these 3 cases, the material is a washed concrete sand. An uncompacted voids of 46.5% would exclude all of the natural fine aggregates, except one (Mix 3).

4.1.2 Combined Blends

The percentage of manufactured and natural fine aggregates in the total blend of aggregates passing the 2.36 mm (No. 8) sieve was calculated and is shown in Table 3. The manufactured and natural fine aggregates were then blended using these proportions and tested using AASHTO TP3. A ranked order plot of the uncompacted voids of the combined blends of fine aggregate is shown in Figure 5. In all cases, the combined fine aggregates had an uncompacted void level greater than 44.0%.

Table 3. Summary of Fine Aggregate Angularities.

Mix	Percentage (%) Passing the 2.36 mm Sieve		AASHTO TP3			French P 18-564		
			Uncompacted Voids (%)			Time (seconds)		
	Man.	Nat.	Man.	Nat.	Comb.	Man.	Nat.	Comb.
1	65	35	47.6	44.3	NT	NT	NT	NT
2	75	25	46.8	NT	NT	35.1	NT	NT
3	65	35	49.7	46.6	48.5	38.1	33.3	35.9
4	100	0	48.2	None	48.2	36.2	None	36.2
5	65	35	48.8	45.8	NT	37.0	34.2	NT
6	40	60	48.8	44.4	46.1	37.3	31.1	32.5
7	75	25	47.0	42.7	NT	34.0	30.0	NT
8	65	35	48.6	41.7	46.6	39.3	28.8	34.5
9	50	50	45.1	44.5	44.0	35.4	32.9	32.6
10	100	0	46.8	None	46.8	37.1	None	37.1
11	70	30	49.7	44.1	48.3	38.3	31.7	34.3
12	70	30	47.7	43.3	46.9	36.7	30.1	34.7
13	100	0	48.6	None	48.6	39.6	None	39.6
14	80	20	46.6	44.0	46.9	35.9	31.2	34.1
15	70	30	48.1	43.9	46.9	37.0	31.3	34.8
16	65	35	47.0	45.8	46.0	35.4	32.7	33.4
17	100	0	48.3	None	48.3	38.0	None	38.0
18	85	15	47.0	43.5	46.2	35.9	31.9	34.4
19	100	0	47.3	None	47.3	33.6	None	33.6

Nat. - Natural
Man. - Manufactured
Comb.- Combined Natural and Manufactured

None - No Natural Used in HMA
NT - Not Tested

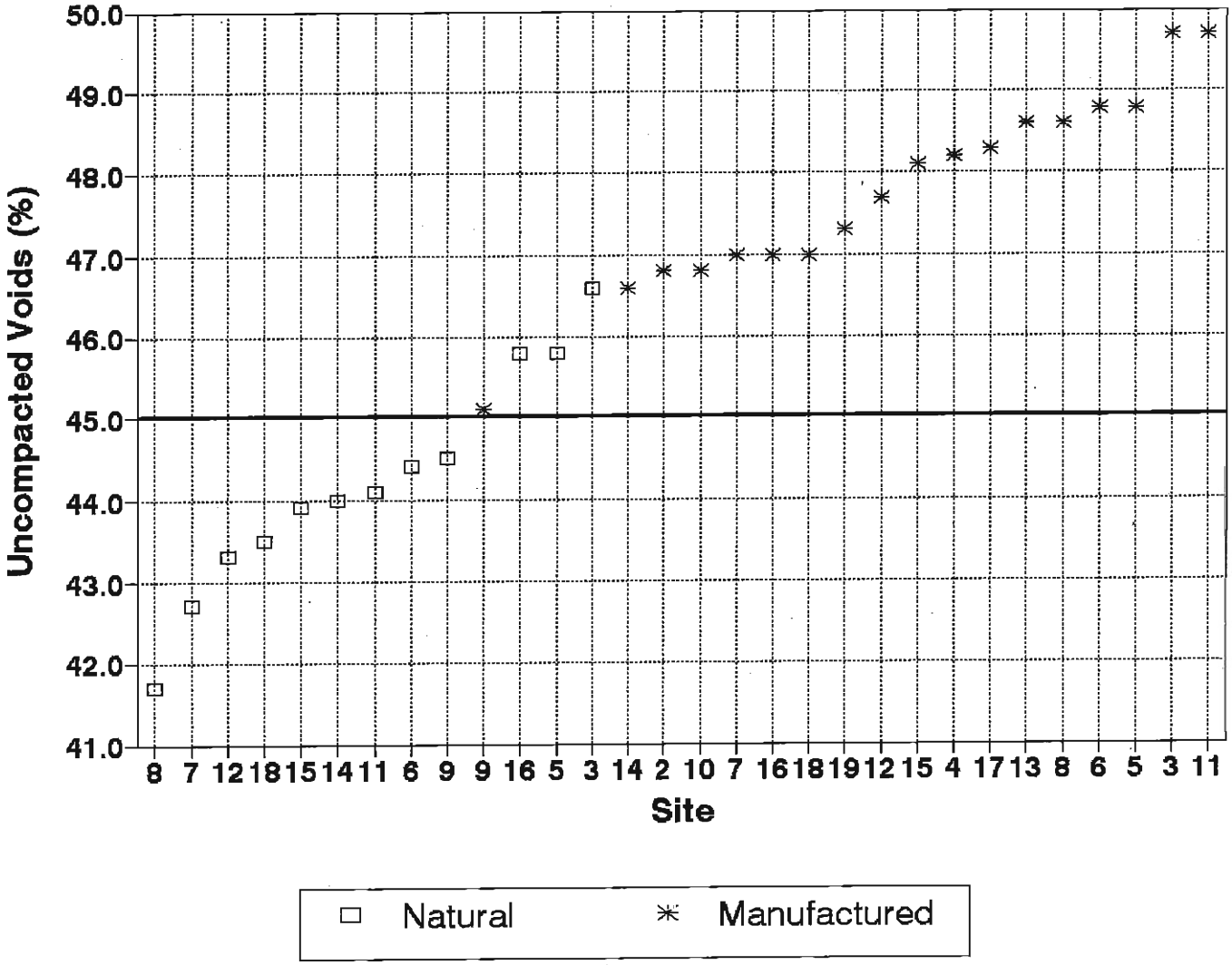

Figure 4. Ranked Order Plot of Uncompacted Voids (%) of Individual Stockpiles Using AASHTO TP3.

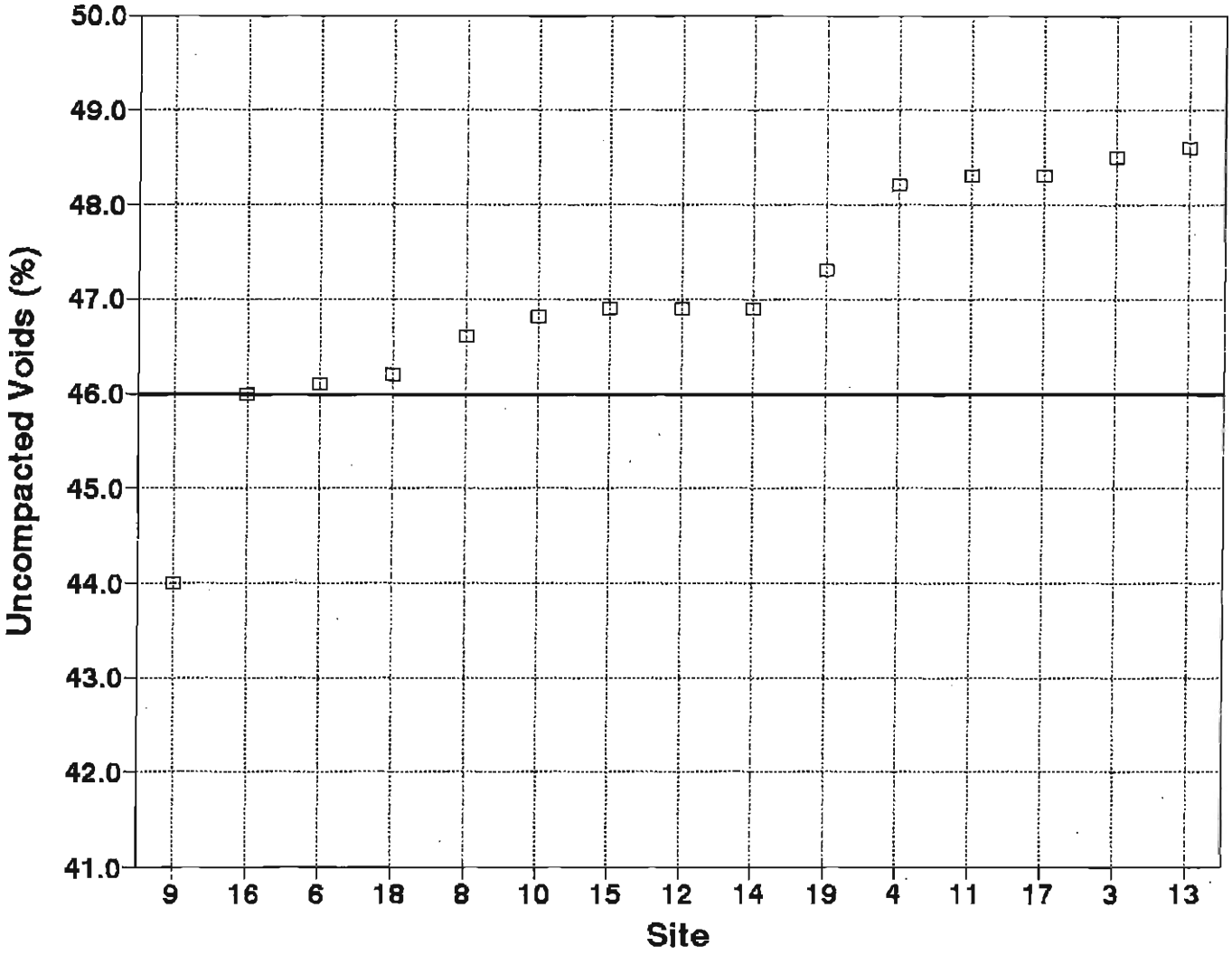

Figure 5. Ranked Order Plot of Uncompacted Voids (%) of Blends using AASHTO TP3.

Mix 9 was very unusual. The combined fine aggregate angularity was lower than either of its components. This occurred for both the AASHTO TP3 and the French P 18-564 methods. When Mix 9 is excluded, all of the uncompacted voids for the combined natural and manufactured fine aggregates equalled or exceeded 46.0%.

4.1.3 Calculating vs. Testing Combined Blends

The uncompacted voids of each individual stockpile is known. Since the percent of each individual stockpile is known, it is possible to calculate the uncompacted voids of the blended fine aggregates. The comparison of the measured and calculated uncompacted voids of the blended fine aggregates is shown in Table 4. The comparison is made for 10 of the 19 mixtures investigated. A blend was not compared if the combination was not tested or there were no natural fine aggregates.

Table 4. Comparison of Measured and Calculated Results of Combined Fine Aggregates.

Mix	AASHTO TP3			French P 18-564		
	Uncompacted Voids (%)			Time (seconds)		
	Measured	Calculated	Diff.	Measured	Calculated	Diff.
3	48.5	48.6	+0.1	35.9	36.4	+0.5
6	46.1	46.2	+0.1	32.5	33.6	+1.1
8	46.6	46.2	-0.4	34.5	35.6	+1.1
9	44.0	44.8	+0.8	32.6	34.2	+1.6
11	48.3	48.0	-0.3	34.3	36.3	+2.0
12	46.9	46.4	-0.5	34.7	34.7	0.0
14	46.9	46.1	-0.8	34.1	35.0	+0.9
15	46.9	46.8	-0.1	34.8	35.3	+0.5
16	46.0	46.6	+0.6	33.4	34.5	+1.1
18	46.2	46.9	+0.7	34.4	35.3	+0.9
Avg			+0.02			+0.97
S.D.			0.54			0.54

Negative numbers indicate the calculated is lower than the measured.

For the 10 samples tested, the average difference between the measured and calculated values was negligible. However, the calculated values were as much as 0.8 higher than the measured values (Mix 9) and as much as 0.8 lower than the measured values (Mix 14). The standard deviation of the differences was 0.54. There seems to be considerable variability of the uncompacted voids between measured and calculated values. It is not recommended to use an uncompacted voids calculated from individual components. However, if all individual stockpiles exceed the specified value, it would probably not be necessary to test the blended fine aggregates.

4.2 French P 18-564

4.2.1 Individual Stockpiles

The flow times have been plotted in ranked order in Figure 6. Some of the sites are listed twice because the contractor used a natural fine aggregate stockpile and a manufactured fine aggregate stockpile. The delineation between natural and manufactured fine aggregates appears to be lower than the French recommendation. The delineation is around 33.0 to 35.0 seconds, and the French recommend 35 to 37 seconds. There are two manufactured and two natural fine aggregates in with results between 33.0 and 35.0 seconds.

4.2.2 Combined Blends

The percentage of manufactured and natural fine aggregates in the total blend of aggregates passing the 2.36 mm (No. 8) sieve was calculated and is shown in Table 3. The manufactured and natural fine aggregates were then blended using these proportions and tested using the French P 18-564.

A ranked order plot of the flow time of the combined blends of fine aggregate is shown in Figure 7. Only two of the fine aggregate blends (Mixes 6 and 9) were shorter than 33.0 seconds. All of the other blends exceeded 33.0 seconds. It was interesting to note that only 5 of the 15 blends tested greater than 35.0 seconds. Eight of the blended fine aggregates tested were in the range of 33.0 to 35.0 seconds.

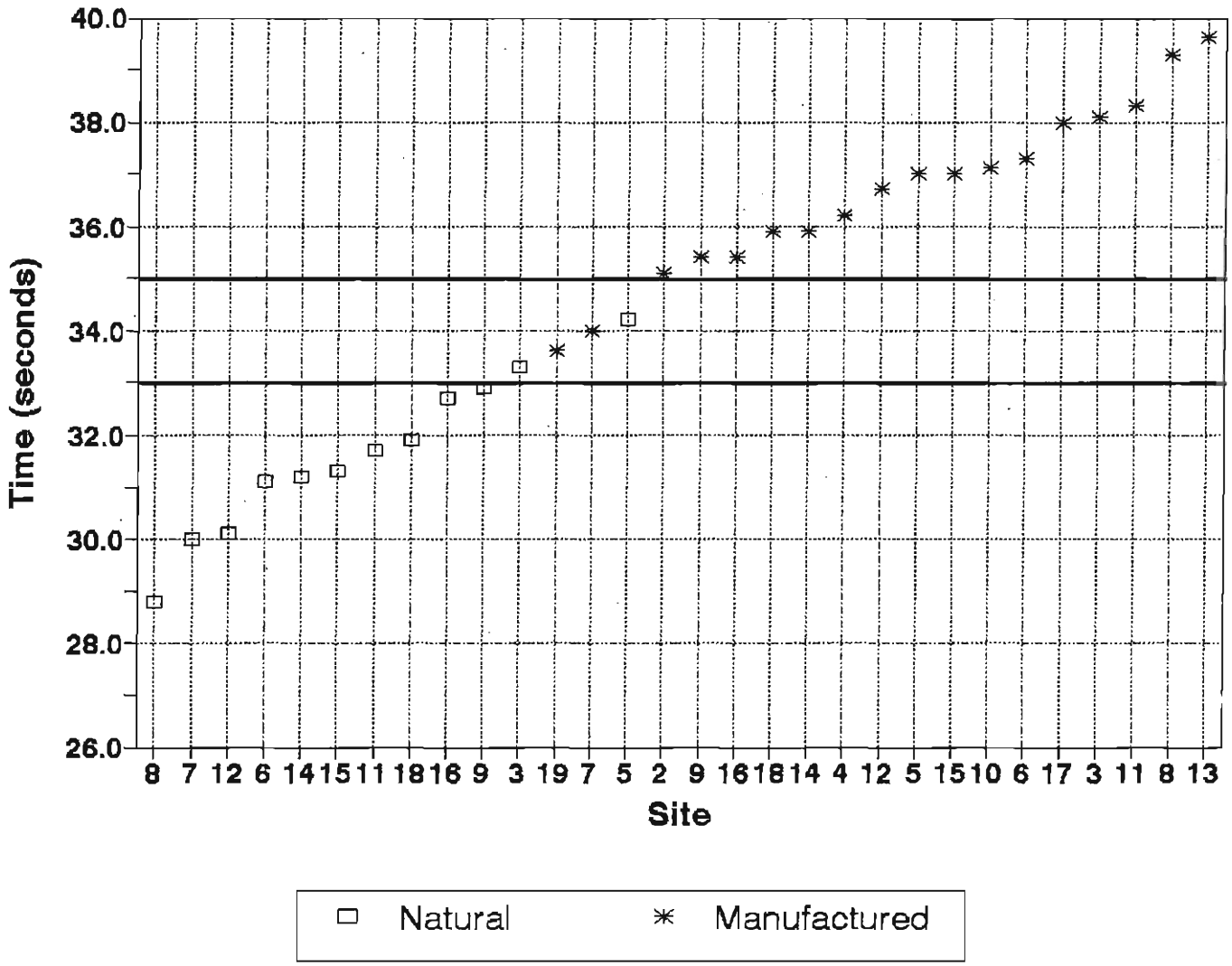

Figure 6. Ranked Order Plot of Flow Time of Individual Stockpiles Using French P 18-564.

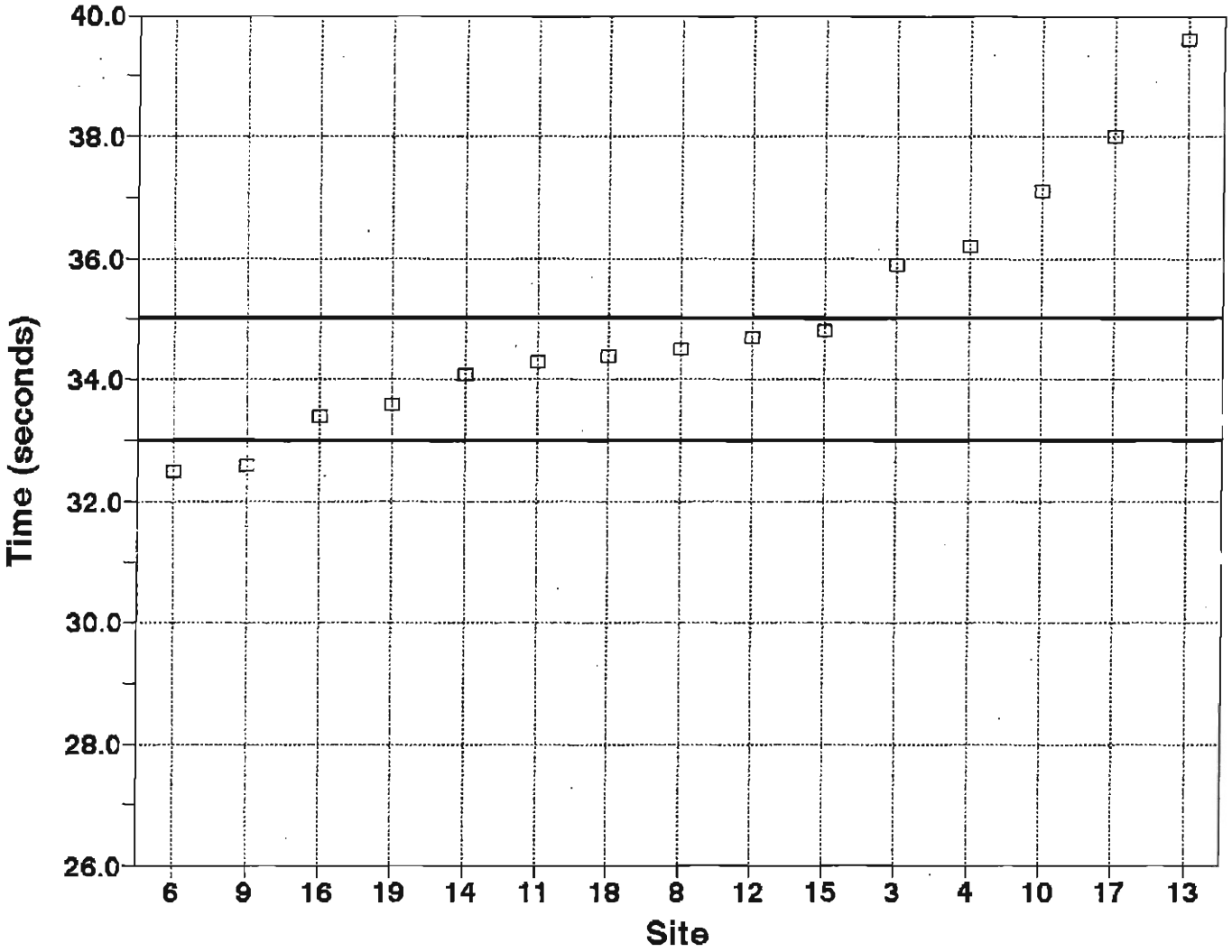

Figure 7. Ranked Order Plot of Flow Time of Blends Using French P 18-564.

4.2.3 Calculating vs. Testing Combined Blends

The uncompacted voids of each individual stockpile is known. Since the percent of each individual stockpile is known, it is possible to calculate the uncompacted voids of the blended fine aggregates. The comparison of the measured and calculated uncompacted voids of the blended fine aggregates is shown in Table 4.

For the 10 samples tested, the calculated times averaged nearly 1 second longer than the measured values. However, the calculated values were as much as 2 seconds longer than the measured values (Mix 11) and were never shorter than the measured values. The standard deviation of the differences was 0.54. There seems to be considerable variability of the time between measured and calculated values. It is not recommended to use a time calculated from individual stockpiles. However, if all individual stockpiles exceed the specified value, it would probably not necessary to test the blended fine aggregates.

4.3 Comparison of the AASHTO TP3 and French P 18-564 Methods

4.3.1 Correlation of Test Results

As the uncompacted voids measured by AASHTO TP3 increases, the flow time in the French P 18-564 also increases as shown in Figure 8. The equation of the regression line is:

$$T = 1.27\ U_s - 24.1$$

where:

U_s = uncompacted voids (%) from AASHTO TP3, Method A, and

T = flow time (seconds) from the French P 18-564.

The coefficient of determination, r^2, was 0.86. The correlation of several uncompacted voids to flow times are shown in Table 5. An uncompacted voids of 45.0% from AASHTO TP3 is approximately equivalent to 33.0 seconds using the French P 18-564. When the flow time is greater than 35.0 seconds, the French have a lot of confidence the fine aggregate angularity. A flow time of 35.0 seconds is approximately equivalent to an uncompacted voids of 46.5%.

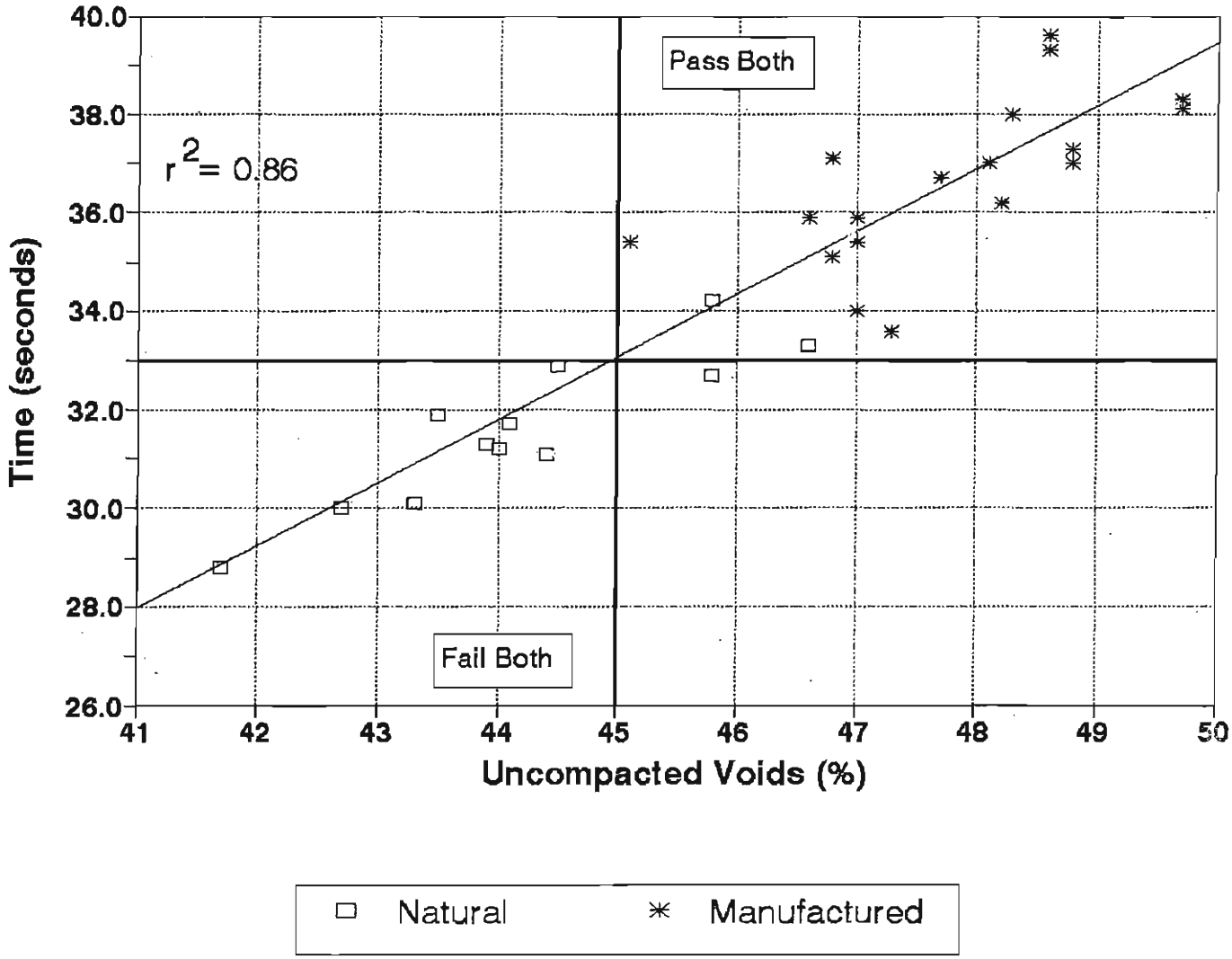

Figure 8. Comparison of Flow Time from the French P 18-564 with the Uncompacted Voids from AASHTO TP3.

Table 5. Correlation of AASHTO TP3 and French P 18-563 Methods.

Uncompacted Voids (%)	Corresponding Flow Time (Seconds)
45.0	33.0
46.0	34.3
46.5	35.0
48.1	37.0

4.3.2 Time of Preparation

In order to prepare a sample for testing, a standard gradation (AASHTO T 27) is performed. The fine aggregates on the sieves used for the angularity test are saved. When a standard gradation (AASHTO T 27) is performed with 1000 grams, it typically takes 1 gradation to obtain enough material to perform AASHTO TP3, Method A, with 190 grams. AASHTO TP3, Method B, may take more than 1 gradation. However, it typically takes 3 gradations to obtain enough material to perform the French P 18-564 with 1000 grams. Approximately 30 additional minutes are required to prepare a sample for testing using the French P 18-564 method than the AASHTO TP3 method.

4.3.3 Other Considerations

When testing with the AASHTO TP3 method, the bulk specific gravity of the fine aggregates, G_{sb}, as measured by AASHTO T 84 is required. AASHTO T 84 is always performed for the mix design to calculate the VMA of the compacted HMA mixture. However, AASHTO T 84 is performed on all of the material passing the 4.75 mm (No. 4) sieve. AASHTO TP3 is performed on material passing the 2.36 (No. 8) sieve and retained on the 0.15 mm (No. 100) sieve.

Furthermore, AASHTO T 84 is measured on the "as-received" gradation, and AASHTO TP3 is performed on a standard fabricated gradation. Differences in the sizes and gradations of the fine aggregate when testing AASHTO T 84 and AASHTO TP3 could cause for misleading angularity results.

The French P 18-564 method could be influenced by the specific gravity of the aggregates. If a light-weight aggregate were tested that was very round, it would still take a longer time to flow through the orifice since there would be more volume of fine aggregate. If the French procedure is used, an adjustment should be made when using fine aggregate with specific gravities substantially different than the standard specific gravities. The bulk specific gravities of all of the aggregates used in this study were between 2.562 and 2.695.

4.4 Recommended Specification Values

Currently the CDOT limits natural fine aggregates in a mixture to a maximum of 20%. It is not desired to implement an angularity test to allow higher quantities of natural fine aggregates. Additionally, it is not desired to impose hardships on contractors because of a new angularity specification. The CDOT is generally pleased with the fine aggregate angularity in its current HMA mixtures.

AASHTO TP3 is recommended for use as a specification. The AASHTO TP3 procedure was considered better than the French P 18-564 because of the shorter preparation time. The test should be performed on the blend of fine aggregates, and calculations should not be allowed. The recommended specification values for the AASHTO TP3 are shown in Table 6.

Table 6. Recommended Specification Values for AASHTO TP3.

Traffic ESALs	Uncompacted Voids (%) Blended Fine Aggregates
$< 1 \times 10^6$	45.0
$> 1 \times 10^6$	46.0

The uncompacted voids of 46.0% for high trafficked roads will allow all but one of the mixtures (Mix 9) to pass. These are plotted in ranked order in Figure 5. It is interesting to note three examples of mixtures that barely meet the recommended specification. These examples provide an indication of the quantity of natural fine aggregates that will be allowed. Mix 6 utilized 35% washed concrete sand with a manufactured fine aggregate from a quarry. The uncompacted

voids were 46.1%. Mix 16 used 20% washed concrete sand with a manufactured fine aggregates from a sand and gravel pit. The uncompacted voids were 46.0%. Mix 18 used 10% natural fine aggregates with a manufactured fine aggregate from a sand and gravel pit. The uncompacted voids were 46.2%.

All of the mixes tested would pass the specification of 45.0% uncompacted voids, except Mix 9. Mix 9 was crushed from a sand and gravel pit and has 20% natural fine aggregates.

An uncompacted voids of 46.0% is approximately equivalent to a flow time of 34.3 seconds using the French P 18-564 method. It should be noted that a flow time of 34.3 seconds would cause concerns by the French that rutting might be a problem. An uncompacted voids of 45.0% is approximately equal to a flow time of 33.0 seconds.

The uncompacted voids of 45.0% will allow more than 20% natural fine aggregates into an HMA mixture. This is a potential concern and should be implemented with caution. Although an uncompacted voids of 45.0% causes concern, SHRP has recommended (8) an uncompacted voids of 40.0% for less than 3 million ESALs. SHRP would easily allow 100% natural fine aggregates.

Although the SHRP recommendations appear very low, it should be noted that there are two significant differences in the SHRP specification. The first involves the aggregate gradation. The SHRP gradation is coarser than the CDOT Master Range and has a restricted zone. The coarser gradation allows for a smaller percentage of fine aggregate. The restricted zone may prevent the use of some natural fine aggregates. Secondly SHRP has a minimum requirement for the air voids at the initial number of gyrations, N_{init}, on the SHRP Gyratory Compactor. These two differences might limit the natural fine aggregates further than the angularity requirement. The SHRP fine aggregate angularity requirements should be investigated before implementation.

5.0 Repeatability

AASHTO TP3 has a precision statement. The single operator standard deviation is 0.13 percent voids. Two properly conducted tests by the same operator on similar samples should not differ by more than 0.37 percent uncompacted voids. The multi-laboratory standard deviation is 0.33. Two properly conducted tests by different operators on similar samples should not differ by more than 0.93 percent uncompacted voids.

Based on testing for this study, the single-operator standard deviation may be lower than the precision statement. Additional studies should be performed to verify the precision statement in the procedure.

The bulk specific gravity of the aggregate (G_{sb}) as determined by AASHTO T 84 is very important in determining the uncompacted voids. A change in the G_{sb} by 0.05 will change the uncompacted voids by approximately 1.0% uncompacted voids. A change in G_{sb} by 0.005 will change the uncompacted voids by approximately 0.1%.

6.0 Implementation

6.1 Implementation Plan for Projects

6.1.1 1994 Construction Season

Step 1: The Central Laboratory has ordered seven angularity devices, one for each Region Laboratory. It is uncertain when they will be available because there is no commercial distributor of the equipment at this time.

Step 2: A Colorado Laboratory Procedure (CP-L) should be developed. Each Region should receive the procedure, device and training simultaneously. A round robin should be performed to investigate within- and between-laboratory variability.

Step 3: Each Region Laboratory should perform the test on projects when gradation is tested. The angularity test results should be provided to the contractors. The test results will also be useful to identify potential causes for loss of air voids when field verifying mixes.

Step 4: The test results and percent of natural fine aggregates should be submitted to the Central Laboratory for compilation and analysis. A baseline of angularities can be obtained for the entire state.

Step 5: At the end of the construction season, the specified values should be re-evaluated. If the season of monitoring is successful with no problems, then the specification could be considered for statewide implementation. If problems arise, then a limited implementation plan should be followed.

Step 6: The specification should be developed and processed through the Specification Committee.

6.1.2 1995 Construction Season

Step 1: If any disputes arise during the implementation, the maximum of 20% natural fine aggregates should be used as a referee.

The implementation plan for this specification appears very short. However, the test is very simple and the device is not expensive. Furthermore, there has been a great need expressed by both the contractors and CDOT to quantify the fine aggregate angularity.

When the SHRP gyratory arrives, the angularity specification recommended by SHRP should be evaluated with the new gradation requirements and N_{Init}.

6.2 Draft Specification

Currently the Standard Specifications, Section 703.04, limits the maximum natural fine aggregates that are allowed. This should be deleted. Table 403-1 in the project special provisions should have a new line added that states "Uncompacted Voids (%), AASHTO TP3", with a "fill-in-the-blank". The Design Manual should provide the guidance for the Materials Engineers to fill-in-the-blank. The guidance should be that shown in Table 6.

6.3 Other Modifications Necessary

The mix design sheets currently include the bulk specific gravity of the combined aggregate blend (G_{sb}). This value should still be reported. The G_{sb} of the fine aggregate blend should be reported in addition. This will provide the information necessary for monitoring the uncompacted voids during construction.

The fine aggregates in recycled asphalt pavement (RAP) have been extremely rounded in some cases. When RAP is used, the fine aggregates should be extracted from the RAP and tested in the AASHTO TP3 procedure. The fine aggregates in the RAP should be blended with the other fine aggregates in the percentages used in the mixture. In the Central Laboratory, the effective specific gravity of the fine aggregates (G_{se}) should be used for the RAP. In the Region Laboratories, a solvent wash with biodegradable solvents will be required to obtain extracted fine aggregates from the RAP for testing the angularity.

A CP-L should be written to replace AASHTO TP3. Methods B and C need to be eliminated. The provisions to account for RAP need to be added. After the distribution of the equipment and training, any procedural clarifications identified should be added.

7.0 Conclusions

1) The French P 18-564 and AASHTO TP3 methods produce very comparable results. Using AASHTO TP3, a minimum uncompacted voids of 45.0% would include all of the manufactured fine aggregates, and a value of 46.0% would exclude most of the natural fine aggregates. Using the French P 18-564, a flow time of 33.0 to 35.0 seconds delineated between all of the natural and manufactured fine aggregates.

2) AASHTO TP3 is recommended for use as a specification. The specification should be applied to the tested blend of fine aggregates. The blend should not be calculated from the values of the individual components. However, if all individual stockpiles exceed the specification, testing on the blend is not required.

3) Specification values should be those shown in Table 6. A specification of 46.0% allows natural fine aggregate in a similar quantity that is currently allowed. A specification of 45.0% will likely allow more natural fine aggregates. These values are higher than the SHRP recommendations but lower than the French recommendations.

4) The proposed specification should be implemented in a staged and methodical manner.

8.0 References

1. Asphalt Concrete Mix Design and Field Control. Technical Advisory T 5040.27, Federal Highway Administration, U.S. Department of Transportation, March 10, 1988, 27 pages.

2. Tentative Method of Test for Uncompacted Void Content of Fine Aggregate. National Sand and Gravel Association and National Ready-Mix Concrete Association, Washington, D.C., (Undated)

3. Test Method for Measuring Fine Aggregate Angularity. Michigan Test Method 118-90, Approved November, 1990.

4. Determining the Flow Coefficients of Sand. Tentative Standard P 18-564, February 1981.

5. Kandhal, P.S., J.B. Motter, and M.A. Khatar (1991), "Evaluation of Particle Shape and Texture: Manufactured Versus Natural Sands," Transportation Research Record 1301, Transportation Research Board, National Research Council, Washington, D.C., pp. 48-56.

6. Mogawer, W.S., and K.D. Stuart (1992), Evaluation of Test Methods Used to Quantify Sand Shape and Texture," Transportation Research Record 1362, Transportation Research Board, National Research Council, Washington, D.C., pp. 28-37.

7. Aschenbrener, T.B. (1992), "Comparison of Colorado Component Hot Mix Asphalt Materials With Some European Specifications," Colorado Department of Transportation, CDOT-DTD-R-92-14, 65 pages.

8. SUPERPAVE Asphalt Mixture Design, February 1994, National Asphalt Training Center, Demonstration Project 101, FHWA Office of Technology Applications, Washington, D.C., and the Asphalt Institute Research Center, Lexington, Kentucky, 147 pages.

9. Aschenbrener, T.B. (1993), "Determining Optimum Asphalt Content With the Texas Gyratory Compactor," Colorado Department of Transportation, CDOT-DTD-R-93-23, 78 pages.

Appendix A

AASHTO TP3

June, 1993
Passed Committee C-9 Letter Ballot
Several Editorial Corrections Made

Standard Test Method for Uncompacted Void Content of Fine Aggregate (As Influenced by Particle Shape, Surface Texture, and Grading)

1. SCOPE

1.1 This method describes the determination of the loose uncompacted void content of a sample of fine aggregate. When measured on any aggregate of a known grading, void content provides an indication of that aggregate's angularity, sphericity, and surface texture compared with other fine aggregates tested in the same grading. When void content is measured on an as-received fine aggregate grading, it can be an indicator of the effect of the fine aggregate on the workability of a mixture in which it may be used.

1.2 Three procedures are included for the measurement of void content. Two use graded fine aggregate (standard grading or as-received grading), and the other uses several individual size fractions for void content determinations:

1.2.1 Standard Graded Sample (Method A) -- This method uses a standard fine aggregate grading that is obtained by combining individual sieve fractions from a typical fine aggregate sieve analysis. See the section on Preparation of Test Samples for the grading.

1.2.2 Individual Size Fractions (Method B) -- This method uses each of three fine aggregate size fractions: (a) 2.36-mm (No. 8) to 1.18-mm (No. 16); (b) 1.18-mm (No. 16) to 600-µm (No. 30); and (c) 600-µm (No. 30) to 300-µm (No. 50). For this method, each size is tested separately.

1.2.3 As-Received Grading (Method C) -- This method uses that portion of the fine aggregate finer than a 4.75-mm (No. 4) sieve.

1.2.4 See the section on Significance and Use for guidance on the method to be used.

1.3 The values stated in SI Units shall be regarded as the standard.

1.4 This standard does not purport to address all of the safety problems, if any, associated with its use. It is

the responsibility of the user of this standard to establish appropriate safety and health practices and determine the applicability of regulatory limitations prior to use.

2. REFERENCED DOCUMENTS

2.1 ASTM Standards

B 88 - Specification for Seamless Copper Water Tube.

B 88M - Specification for Seamless Copper Water Tube (Metric)

C 29/29M - Test Method for Unit Weight and Voids in Aggregate

C 117 Test Method for Materials Finer than 75-μm (No. 200) Sieve in Mineral Aggregates by Washing.

C 125 Terminology Relating to Concrete and Concrete Aggregates.

C 128 Test Method for Specific Gravity and Absorption of Fine Aggregate.

C 136 Test Method for Sieve Analysis of Fine and Coarse Aggregates.

C 702 Practice for Reducing Field Samples of Aggregate to Testing Size.

C 778 Specification for Standard Sand

D 75 Practice for Sampling Aggregates.

2.2 ACI Document

ACI 116R Cement and Concrete Terminology[1]

3. TERMINOLOGY

3.1 Terms used in this standard are defined in Terminology C 125 or ACI 116R.

---

[1] Copies may be obtained from the American Concrete Institute, Box 19150, Detroit, MI 48219.

4. SUMMARY OF TEST METHOD

4.1 A nominal 100-mL calibrated cylindrical measure is filled with fine aggregate of prescribed grading by allowing the sample to flow through a funnel from a fixed height into the measure. The fine aggregate is struck off, and its mass is determined by weighing. Uncompacted void content is calculated as the difference between the volume of the cylindrical measure and the absolute volume of the fine aggregate collected in the measure. Uncompacted void content is calculated using the bulk dry specific gravity of the fine aggregate. Two runs are made on each sample and the results are averaged.

4.1.1 For a graded sample (Method A or Method C) the percent void content is determined directly, and the average value from two runs is reported.

4.1.2 For the individual size fractions (Method B), the mean percent void content is calculated using the results from tests of each of the three individual size fractions.

5. SIGNIFICANCE AND USE

5.1 Methods A and B provide percent void content determined under standardized conditions which depends on the particle shape and texture of a fine aggregate. An increase in void content by these procedures indicates greater angularity, less sphericity, or rougher surface texture, or some combination of the three factors. A decrease in void content results is associated with more rounded, spherical, smooth surfaced fine aggregate, or a combination of these factors.

5.2 Method C measures the uncompacted void content of the minus 4.75-mm (No. 4) portion of the as-received material. This void content depends on grading as well as particle shape and texture.

5.3 The void content determined on the standard graded sample (Method A) is not directly comparable with the average void content of the three individual size fractions from the same sample tested separately (Method B). A sample consisting of single size particles will have a higher void content than a graded sample. Therefore, use either one method or the other as a comparative measure of shape and texture, and identify which method has been used to obtain the reported data. Method C does not provide an indication of shape and texture directly if the grading from sample to sample changes.

5.3.1 The standard graded sample (Method A) is most useful as a quick test which indicates the particle shape properties of a graded fine aggregate. Typically, the material used to make up the standard graded sample can be obtained from the remaining size fractions after performing a single sieve analysis of the fine aggregate.

5.3.2 Obtaining and testing individual size fractions (Method B) is more time consuming and requires a larger initial sample than using the graded sample. However, Method B provides additional information concerning the shape and texture characteristics of individual sizes.

5.3.3 Testing samples in the as-received grading (Method C) may be useful in selecting proportions of components used in a variety of mixtures. In general, high void content suggests that the material could be improved by providing additional fines in the fine aggregate or more cementitious material may be needed to fill voids between particles.

5.3.4 The bulk dry specific gravity of the fine aggregate is used in calculating the void content. The effectiveness of these methods of determining void content and its relationship to particle shape and texture depends on the bulk specific gravity of the various size fractions being equal, or nearly so. The void content is actually a function of the volume of each size fraction. If the type of rock or minerals, or its porosity, in any of the size fractions varies markedly it may be necessary to determine the specific gravity of the size fractions used in the test.

5.4 Void content information from Methods A, B, or C will be useful as an indicator of properties such as: the mixing water demand of hydraulic cement concrete; flowability, pumpability, or workability factors when formulating grouts or mortars; or, in bituminous concrete, the effect of the fine aggregate on stability and voids in the mineral aggregate; or the stability of the fine aggregate portion of a base course aggregate.

6. APPARATUS

6.1 Cylindrical Measure -- A right cylinder of approximately 100-mL capacity having an inside diameter of approximately 39-mm and an inside height of approximately 86-mm made of drawn copper water tube meeting ASTM Specification B 88 Type M, or B 88M Type C. The bottom of the measure shall be metal at least 6-mm thick, shall be firmly sealed to the tubing, and shall be provided with means for aligning the axis of the cylinder with that of the funnel. See Figure 1.

6.2 Funnel -- The lateral surface of the right frustum of a cone sloped 60 ± 4° from the horizontal with an opening of 12.7 ± 0.6-mm diameter. The funnel section shall be a piece of metal, smooth on the inside and at least 38-mm high. It shall have a volume of at least 200-mL or shall be provided with a supplemental glass or metal container to provide the required volume. See Figure 2.

Note 1 -- Pycnometer top C9455 sold by Hogentogler and Co., Inc., 9515 Gerwig, Columbia, Maryland 21045, 410-381-2390 is satisfactory for the funnel section, except that the size of the opening has to be enlarged and any burrs or lips that are apparent should be removed by light filing or sanding before use. This pycnometer top must be used with a suitable glass jar with the bottom removed (Figure 2).

6.3 Funnel stand -- A three or four legged support capable of holding the funnel firmly in position with the axis of the funnel colinear (within a 4° angle and a displacement of 2 mm) with the axis of the cylindrical measure. The funnel opening shall be 115 ± 2 mm above the top of the cylinder. A suitable arrangement is shown in Figure 2.

6.4 Glass Plate -- A square glass plate approximately 60 mm by 60 mm with a minimum 4-mm thickness used to calibrate the cylindrical measure.

6.5 Pan -- A metal or plastic pan of sufficient size to contain the funnel stand and to prevent loss of material. The purpose of the pan is to catch and retain fine aggregate particles that overflow the measure during filling and strike off.

6.6 Metal spatula with a blade approximately 100-mm long, and at least 20-mm wide, with straight edges. The end shall be cut at a right angle to the edges. The straight edge of the spatula blade is used to strike off the fine aggregate.

6.7 Scale or balance accurate and readable to ± 0.1 g within the range of use, capable of weighing the cylindrical measure and its contents.

7. SAMPLING

7.1 The sample(s) used for this test shall be obtained using Practice D 75 and Practice C 702, or from sieve analysis samples used for Test Method C 136, or from aggregate extracted from a bituminous concrete specimen. For Methods A and B, the sample is washed over a 150-μm (No. 100) or 75-μm (No. 200) sieve in accordance with Test Method C 117 and then dried and sieved into separate size fractions according to Test Method C 136 procedures. Maintain the necessary size fractions obtained from one (or more) sieve analysis in a dry condition in separate containers for each size. For Method C, dry a split of the as-received sample in accordance with the drying procedure in Test Method C 136.

8. CALIBRATION OF CYLINDRICAL MEASURE

8.1 Apply a light coat of grease to the top edge of the dry, empty cylindrical measure. Weigh the measure, grease, and glass plate. Fill the measure with freshly boiled, deionized water at a temperature of 18 to 24° C. Record the temperature of the water. Place the glass plate on the measure, being sure that no air bubbles remain. Dry the outer surfaces of the measure and determine the combined mass of measure, glass plate, grease, and water by weighing. Following the final weighing, remove the grease, and determine the mass of the clean, dry, empty measure for subsequent tests.

8.2 Calculate the volume of the measure as follows:

$$V = 1000 \frac{M}{D}$$ where:

V = volume of cylinder, mL

M = net mass of water, g

D = density of water (see table in C 29/C 29M for density at the temperature used), Kg/m3

Determine the volume to the nearest 0.1 mL.

Note 2 -- If the volume of the measure is greater than 100.0 mL, it may be desirable to grind the upper edge of the cylinder until the volume is exactly 100.0 mL, to simplify subsequent calculations.

9. PREPARATION OF TEST SAMPLES

9.1 Method A - Standard Graded Sample -- weigh out and combine the following quantities of fine aggregate which has been dried and sieved in accordance with Test Method C 136.

Individual Size Fraction	Mass, g
2.36-mm (No. 8) to 1.18-mm (No. 16)	44
1.18-mm (No. 16) to 600-μm (No. 30)	57
600-μm (No. 30) to 300-μm (No. 50)	72
300-μm (No. 50) to 150-μm (No. 100)	17
	190

The tolerance on each of these amounts is ± 0.2 g.

9.2 Method B - Individual Size Fractions -- Prepare a separate 190-g sample of fine aggregate, dried and sieved in accordance with Test Method C 136, for each of the following size fractions:

Individual Size Fraction	Mass, g
2.36-mm (No. 8) to 1.18-mm (No. 16)	190
1.18-mm (No. 16) to 600-μm (No. 30)	190
600-μm (No. 30) to 300-μm (No. 50)	190

The tolerance on each of these amounts is ± 1 g. Do not mix these samples together. Each size is tested separately.

9.3 Method C - As Received Grading -- Pass the sample (dried in accordance with Method C 136) through a 4.75-mm (No. 4) sieve. Obtain a 190 ± 1-g sample of the material passing the 4.75-mm (No. 4) sieve for test.

9.4 Specific Gravity of Fine Aggregate - If the bulk dry specific gravity of fine aggregate from the source is unknown, determine it on the minus 4.75-mm (No. 4) material according to Test Method C 128. Use this value in subsequent calculations unless some size fractions differ by more than 0.05 from the specific gravity typical of the complete sample, in which case the specific gravity of the fraction (or fractions) being tested must be determined. An indicator of differences in specific gravity of various particle sizes is a comparison of specific gravities run on the fine

aggregate in different gradings. Specific gravity can be run on gradings with and without specific size fractions of interest. If specific gravity differences exceed 0.05, determine the specific gravity of the individual 2.36-mm (No. 8) to 150-μm (No. 100) sizes for use with Method A or the individual size fractions for use with Method B either by direct measurement or by calculation using the specific gravity data on gradings with and without the size fraction of interest. A difference in specific gravity of 0.05 will change the calculated void content about one percent.

10. PROCEDURE

10.1 Mix each test sample with the spatula until it appears to be homogeneous. Position the jar and funnel section in the stand and center the cylindrical measure as shown in Figure 2. Use a finger to block the opening of the funnel. Pour the test sample into the funnel. Level the material in the funnel with the spatula. Remove the finger and allow the sample to fall freely into the cylindrical measure.

10.2 After the funnel empties, strike-off excess heaped fine aggregate from the cylindrical measure by a single pass of the spatula with the width of the blade vertical using the straight part of its edge in light contact with the top of the measure. Until this operation is complete, exercise care to avoid vibration or any disturbance that could cause compaction of the fine aggregate in the cylindrical measure. (Note 3) Brush adhering grains from the outside of the container and determine the mass of the cylindrical measure and contents to the nearest 0.1 g. Retain all fine aggregate particles for a second test run.

Note 3 -- After strike-off, the cylindrical measure may be tapped lightly to compact the sample to make it easier to transfer the container to scale or balance without spilling any of the sample.

10.3 Recombine the sample from the retaining pan and cylindrical measure and repeat the procedure. The results of two runs are averaged. See the Calculation section.

10.4 Record the mass of the empty measure. Also, for each run, record the mass of the measure and fine aggregate.

11. CALCULATION

11.1 Calculate the uncompacted voids for each determination as follows:

$$U = \frac{V - (F/G)}{V} \times 100$$

V = volume of cylindrical measure, mL

F = net mass, g, of fine aggregate in measure (Gross mass minus the mass of the empty measure).

G = bulk dry specific gravity of fine aggregate.

U = uncompacted voids, percent, in the material.

11.2 For the Standard Graded Sample (Method A) calculate the average uncompacted voids for the two determinations and report the result as U_s.

11.3 For the Individual Size Fractions (Method B) calculate:

11.3.1 First, the average uncompacted voids for the determinations made on each of the three size-fraction samples:

U_1 = Uncompacted Voids, 2.36-mm (No. 8) to 1.18-mm (No. 16), percent

U_2 = Uncompacted Voids, 1.18-mm (No. 16) to 600-µm (No. 30), percent

U_3 = Uncompacted Voids, 600-µm (No. 30) to 300-µm (No. 50), percent

11.3.2 Second, the mean uncompacted voids (U_m) including the results for all three sizes:

$$U_m = (U_1 + U_2 + U_3) / 3$$

11.4 For the As-Received grading (Method C) calculate the average uncompacted voids for the two determinations and report the result as U_R.

12. REPORT

12.1 For the <u>Standard Graded Sample</u> (Method A) report:

12.1.1 The Uncompacted Voids (U_s) in percent to the nearest one-tenth of a percent (0.1%).

12.1.2 The specific gravity value used in the calculations.

12.2 For the Individual Size Fractions (Method B) report the following percent voids to the nearest one-tenth of a percent (0.1%):

12.2.1 Uncompacted Voids for size fractions: (a) 2.36-mm (No. 8) to 1.18-mm (No. 16) (U_1); (b) 1.18 mm (No. 16) to 600-µm (No. 30) (U_2); and (c) 600-µm (No. 30) to 300-µm (No. 50) (U_3).

12.2.2 Mean Uncompacted Voids (U_m).

12.2.3 Specific gravity value(s) used in the calculations, and whether the specific gravity value(s) were determined on a graded sample or the individual size fractions used in the test.

12.3 For the As-Received Sample (Method C) report:

12.3.1 The uncompacted voids (U_R) in percent to the nearest one-tenth of a percent (0.1%).

12.3.2 The specific gravity value used in the calculation.

13. PRECISION AND BIAS

13.1 Precision

13.1.1. The single-operator standard deviation has been found to be 0.13 percent voids (1S), using the graded standard silica sand as described in Specification C 778. Therefore, results of two properly conducted tests by the same operator on similar samples should not differ by more than 0.37 percent (D2S).

13.1.2 The multilaboratory standard deviation has been found to be 0.33 percent (1S) using the standard fine aggregate as described in Specification C 778. Therefore, results of two properly conducted tests by different laboratories on similar samples should not differ by more than 0.93 percent (D2S).

13.1.3 The above statements pertain to void contents determined on "graded standard sand" as described in Specification C 778, which is considered rounded, and is graded from 600-µm (No. 30) to 150-µm (No. 100), and may not be typical of other fine aggregates. Additional precision data are needed for tests of fine aggregates having different levels of

angularity and texture tested in accordance with this Test Method.

13.2 Bias

Since there is no accepted reference material suitable for determining the bias for the procedures in this Test Method, bias has not been determined.

14. Keywords: Angularity, Fine Aggregate, Particle Shape, Sand, Surface Texture, Void Content

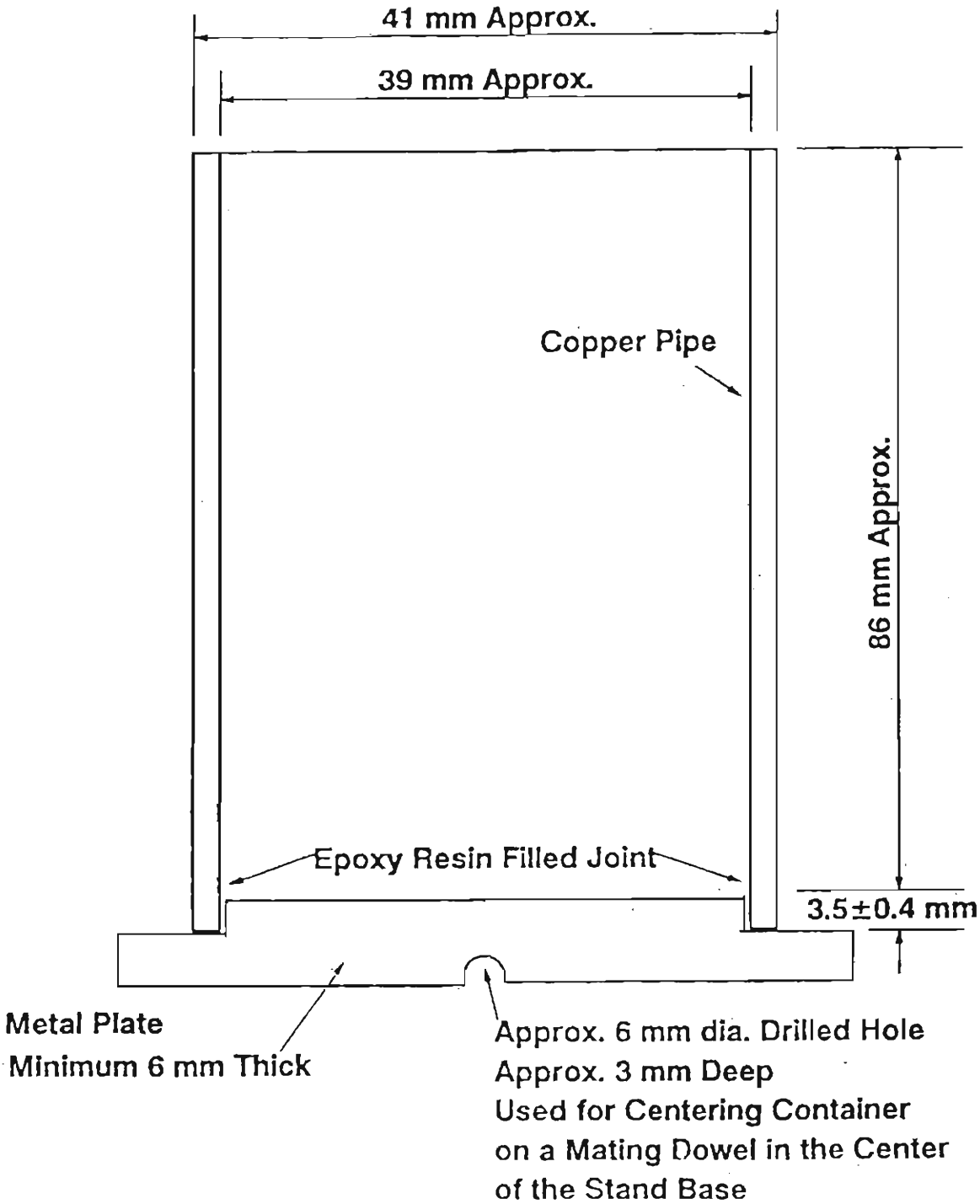

Figure 1: Nominal 100 mL Cylindrical Measure

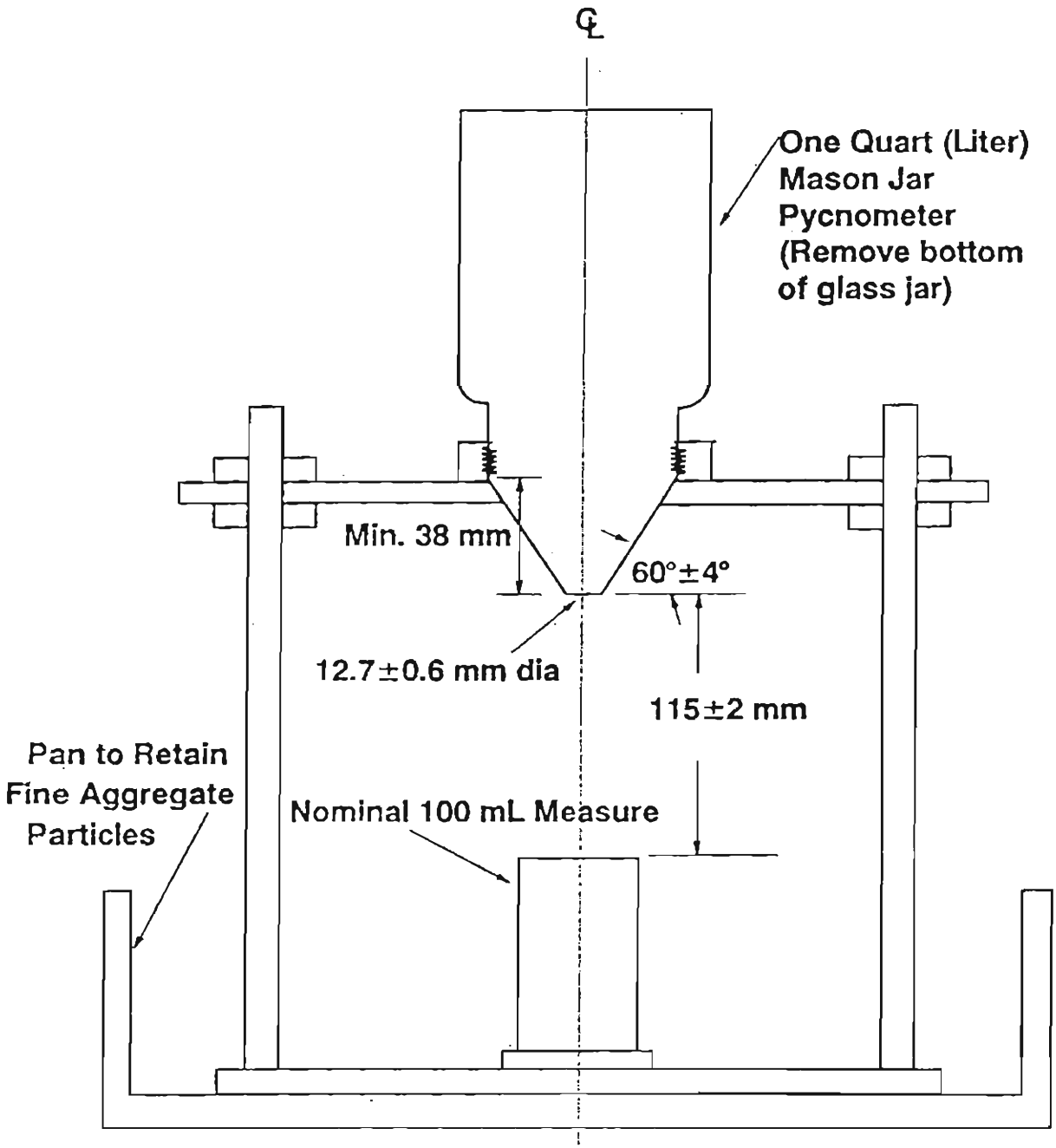

Section Through Center of Apparatus

Figure 2: Suitable Funnel Stand Apparatus with Cylindrical Measure in Place

Appendix B

French Tentative Standard P 18-564

TENTATIVE STANDARD	AGGREGATES DETERMINING THE FLOW COEFFICIENT OF SAND	564 P 18-304 February 1981

Traduction effectuée par
Tour Europe
PARIS LA DEFENSE

FOREWORD

AFNOR has issued this standard, giving it the status of a tentative standard, it being necessary to confirm, by experience, the value of the test.

After a period of three years, this standard will be re-examined and its status may be changed.

1. SCOPE

The purpose of this tentative standard is to specify the procedure for measuring the flow coefficient of sand.

2. FIELD OF APPLICATION

This standard applies to sands (1) of natural or artificial origin, used for roadways.

3. DEFINITION

Flow coefficient for a sand : time of flow, expressed in seconds, for 1000 g of this sand to pass through a given orifice.

(1) See standard N P18-101 "Aggregates - Terminology, definitions, classifications" in preparation

Comments relating to this tentative standard are to be sent to AFNOR, TOUR EUROPE CEDEX 7, 92080 PARIS LA DEFENSE.

Translation
Technical Help to Exporters Service of ISI
TRANSLATED FROM THE FRENCH
Only the original Standard in French is authentic
Issued by L'Association Française de Normalisation (AFNOR) - Tour Europe Cedex 7 92080 Paris La Defense - Tel (1) 778 1320

GRANULATS - DETERMINATION DU COEFFICIENT D'ECOULEMENT DES SABLES

4. APPARATUS

The apparatus used for this flow test (see figure 1) comprises:

- two funnels, 85 mm high and made from polycarbonate, one with a 12 mm opening, the other with a 16 mm opening
- a cylindrical body which can be fitted onto one or the other of the funnels, inside diameter 90 mm, outside diameter 100 mm and 125 mm high,
- a stand, provided with a cover plate which can move on a pivot to open and close the orifice,
- a container of sufficient capacity to receive the material flowing from the funnel.

Sieves, 0.08 - 2 and 4 mm;

a chronometer recording to 1/10 seconds,

a balance, minimum capacity 2 kg, capable of weighing to within 1 g,

an oven, capable of reaching 105°C.

5. MATERIAL FOR TESTING

The sample shall be prepared in accordance with standard NF P 18-553 (1).

The weight of the test sample shall be such that the part dried at 105°C and passing through the 2 or 4 mm sieve is 1000 g ± 1 g.

6. CARRYING OUT THE TEST

Select a funnel, using the 12 mm opening for 0/2 sand or 16 mm opening for 0/4 sand, and place it on its stand, its opening closed off. Place the test sample in the funnel and restrict the height of fall to avoid compacting the material.

---

(1) NF P18-553 "Aggregates - Preparing a sample for testing"

Open the orifice and at the same time start the chronometer, determine the time, to within 1/10 second, for all the material to flow through the funnel. Repeat the test five times, using the same test sample.

7. EXPRESSING THE RESULTS

The flow coefficient EC (O/D), expressed in seconds of the sand being tested, is the average of the five measurements, rounded off to the nearest second.

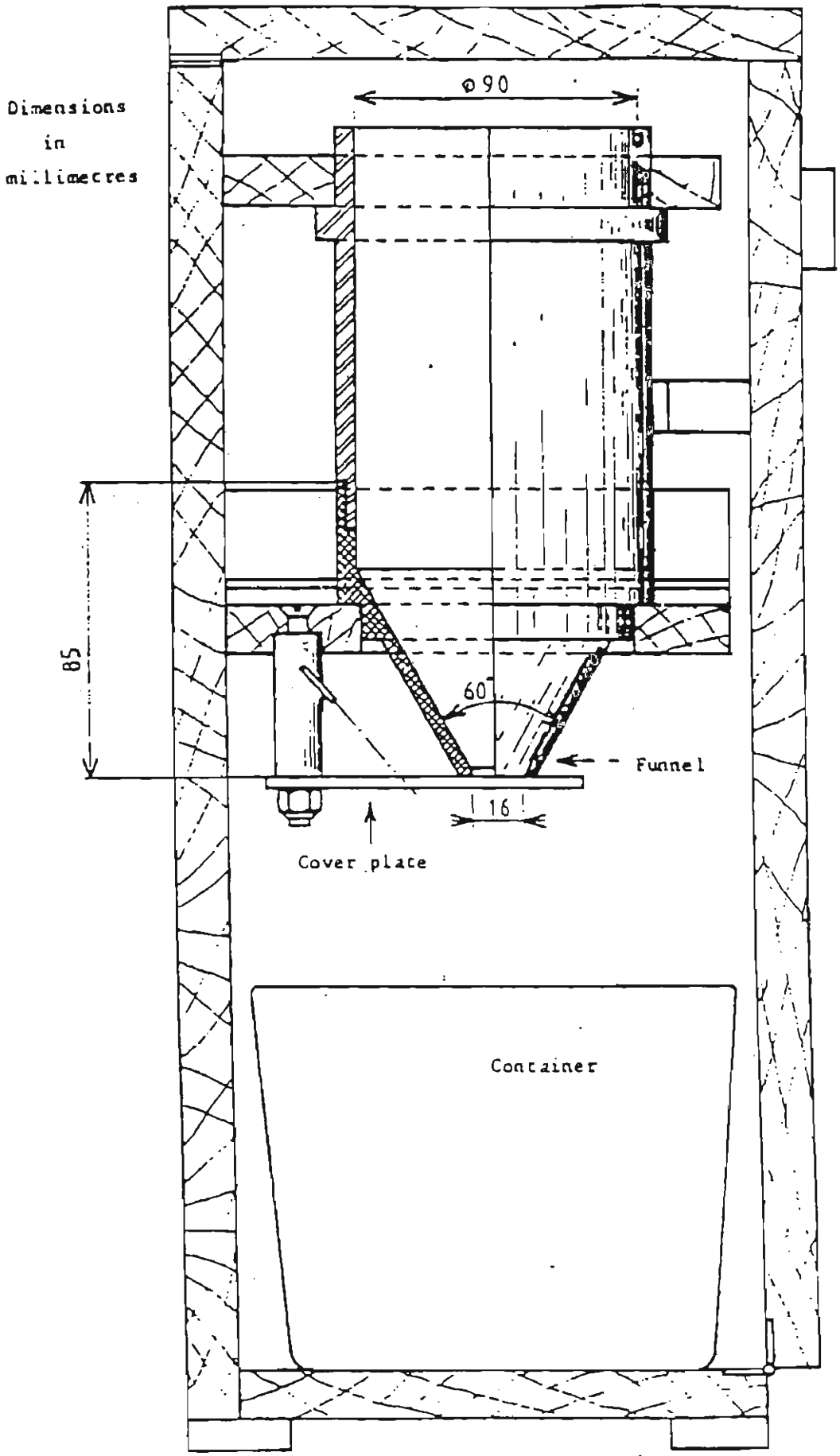
Dimensions
in
millimetres
Ø 90
85
60
Funnel
16
Cover plate
Container