Report No. CDOT-DTD-R-95-8

Factors Affecting the Inter-Laboratory Reproducibility of the Bulk Specific Gravity of Samples Compacted Using the Texas Gyratory Compactor

Charles MacKean
Colorado Department of Transportation
4201 East Arkansas Avenue
Denver, Colorado 80222

Final Report
June, 1995

Prepared in cooperation with the
U.S. Department of Transportation
Federal Highway Administration

The contents of this report reflect the views of the author who is responsible for the facts and the accuracy of the data presented herein. The contents do not necessarily reflect the official views of the Colorado Transportation Institute, the Colorado Department of Transportation, or the Federal Highway Administration. This report does not constitute a standard, specification, or regulation.

Acknowledgements

Larry Lemar (CDOT), for his patience and his thorough knowledge of the various CDOT test procedures. Dave Gallegos (CDOT), Brad Black (CDOT), Robert Meath (CDOT), and Mike Gallegos (Western Mobile), and all of the CDOT Region laboratory testers for their valuable insights and suggestions into the Texas gyratory compactor procedure and its standardization. Tim Aschenbrener (CDOT) and Robert LaForce (CDOT) for their encouragement and comments during the investigation.

The CDOT study panel provided many valuable comments and suggestions for this paper. CDOT participants were: Tim Aschenbrener, Robert LaForce, Steve Horton, Larry Lemar, Donna Harmelink, Alan Hotchkiss. Thanks to Richard Zamorra from the FHWA who also participated in the study panel.

Technical Report Documentation Page

1. Report No.	2. Government Accession No.	3. Recipient's Catalog No.
CDOT-DTD-R-95-8		

4. Title and Subtitle	5. Report Date
Factors Affecting the Inter-Laboratory Reproducibility of the Bulk Specific Gravity of Samples Compacted Using the Texas Gyratory Compactor	June 1995
	6. Performing Organization Code File No. 10.12
7. Author(s) Charles MacKean	8. Performing Organization Rpt. No. CDOT-DTD-R-95-8
9. Performing Organization Name and Address Colorado Department of Transportation 4201 East Arkansas Avenue Denver, Colorado 80222	10. Work Unit No. (TRAIS)
	11. Contract or Grant No.
12. Sponsoring Agency Name and Address Colorado Department of Transportation 4201 E. Arkansas Avenue Denver, Colorado 80222	13. Type of Rpt. and Period Covered Final Report
	14. Sponsoring Agency Code

15. Supplementary Notes
Prepared in Cooperation with the U.S. Department of Transportation
Federal Highway Administration

16. Abstract

The Colorado Department of Transportation (CDOT) uses the inter-laboratory variation of bulk specific gravity results from compacted asphalt mix samples to measure the reproducibility of laboratory compactive efforts. Matched asphalt mixes tested in different laboratories had average differences of sample bulk specific gravities which were statistically significant during the 1993 paving season. This investigation identified and addressed some of the causes of these inter-laboratory differences in sample bulk specific gravities. The findings have implications for the Texas gyratory compactor and possibly for the SUPERPAVE gyratory compactor.

When this investigation's recommendations were implemented in Colorado, inter-laboratory differences in average bulk specific gravity results dropped dramatically. Absolute differences between CDOT Region laboratories and the CDOT Central laboratory decreased from an average of 0.016 in 1993 to 0.002 in 1994.

By taking the following steps, repeatable compaction results were achieved. Formal, scheduled equipment calibration verification was necessary for all laboratories testing asphalt mixes. Also, the loading of the mold and the compaction procedure had to be standardized to a very high degree. The loading and compaction methods must minimize segregation, have strict time limits, achievable by novice testers, be easily taught, and have high operator acceptance to minimize intentional procedure modification.

17. Key Words	18. Distribution Statement
bulk specific gravity, HMA, Texas gyratory compactor, inter-laboratory repeatability, SUPERPAVE gyratory compactor	No Restrictions: This report is available to the public through the National Information Service, Springfield, Virginia 22161

19. Security Classif. (of this report)	20. Security Classif. (of this page)	21. No. of Pages	22. Price
Unclassified	Unclassified	45	

TABLE OF CONTENTS

1.0 INTRODUCTION 1

2.0 INITIAL PROBLEM 2
- **2.1 Differences in Individual Sample Measurements** 2
- **2.2 Testing the Statistical Significance of Differences** 3
- **2.3 Differences in Average Sample Measurements** 4

3.0 INVESTIGATION 7
- **3.1 Initial Response** 7
- **3.2 Equipment Calibration Procedure** 8
- **3.3 Problem Definition** 9
- **3.4 Texas Gyratory Compactor Operation Standardization** 11
- **3.5 Loading Procedure Standardization** 12
- **3.6 Tester Training** 13

4.0 RESULTS 14
- **4.1 Accuracy and Precision of Measurements** 14
- **4.2 Laboratory Comparisons, 1993 and 1994** 14
  - *4.2.1 Accuracy* 14
  - *4.2.2 Precision* 17

5.0 DISCUSSION 17
- **5.1 Mechanism** 17
- **5.2 Implications for the Superpave Gyratory Compactor** 18
- **5.3 Acceptance of Volumetric Results by Project Personnel** 18

6.0 CONCLUSIONS 19

7.0 RECOMMENDATIONS 20

8.0 REFERENCES 20

APPENDIX A

Colorado CP-L 5101, Verification of Laboratory Equipment Used to Test Bituminous Mixtures, Colorado Department of Transportation, Dec. 1994

APPENDIX B

Colorado CP-L 5105, Standard Practice for Preparation of Test Specimens of Bituminous Mixtures by Means of Gyratory Shear Compactor, Colorado Department of Transportation, Dec. 1994

LIST OF FIGURES

Figure 1: Differences in reported bulk specific gravity for matched samples tested by one CDOT Region laboratory and the CDOT Central laboratory 5

Figure 2: Mean differences of bulk specific gravities for the 1993 paving season for six laboratories and the CDOT Central laboratory 6

Figure 3: Mean differences of bulk specific gravities for the 1993 and 1994 paving seasons between six laboratories and the CDOT Central laboratory. . 16

LIST OF TABLES

Table 1. Results from a typical two operator, two laboratory compaction experiment. 9

Table 2. Comparison of 1993 and 1994 observed differences in bulk specific gravity measurements reported by the CDOT Central laboratory and the six CDOT Region laboratories. 15

1.0 INTRODUCTION

The Colorado Department of Transportation (CDOT) routinely takes two matched samples of hot mix asphalt (HMA) at job sites. Matched samples are samples which are taken at the same time from the same material at a job site but are not recombined and split. This means that some random variation in the material may exist between the samples.

One of these samples is tested at one of six CDOT Region laboratories while the other sample is tested at the CDOT Central laboratory. The test results which are reported for the two matched HMA samples are compared in this study. More importantly, the average test results reported over 10 to 60 samples per laboratory are compared and analyzed statistically. This analysis attempts to measure the ability of different laboratories to repeat each others test results or the reproducibility of the test results.

Colorado began using Texas gyratory compactors during the 1992 paving season. Up to and during the 1993 paving season, reproducibility of reported bulk specific gravity results of compacted HMA samples was a problem. None of the six CDOT Region laboratories' results matched the CDOT Central laboratory's results. This meant that samples of mix tested in one laboratory would have, on average, different air void contents than the same mixes tested in another laboratory.

A study for CDOT of flexible pavement test reproducibility was begun in 1992 by Matthew Witczak and Chuck Hughes *(1)*. The study identified the reproducibility of bulk specific gravity results as a problem. This investigation was conducted in response to the findings of the report by Witczak and Hughes.

The bulk specific gravity of compacted samples is used in the design and field control of hot-mix bituminous pavements (HBP). CDOT's HMA mix designs are generated in a different laboratory from the test results used for production control. Thus, it is essential

that the measurements reported by both laboratories agree.

In addition to production control issues, CDOT is currently moving towards a voids acceptance program. This will base HMA pay factors on sample's air void contents and voids in the mineral aggregate. Both of these measurements are calculated using the bulk specific gravity of compacted samples. Colorado contractors may have a tendency to submit higher bids if the reproducibility of tests which determine pay factors is an issue.

Work had already been done by Krugler, Tahmoressi, and Rand *(2)* of the Texas DOT on variables which affected VMA measurement. They discovered that the time of loading affected the bulk specific gravities of compacted samples.

This investigation used these findings and made other discoveries during the process of developing a compaction procedure which greatly reduced or eliminated the inter-laboratory differences in average sample bulk specific gravity results. The findings of this investigation have implications for the Texas gyratory compactor and possibly for the superpave gyratory compactor.

2.0 INITIAL PROBLEM

2.1 Differences in Individual Sample Measurements

During the 1993 paving season, matched samples were sent from paving projects to one of the six CDOT Region laboratories as well as the CDOT Central laboratory. The reported bulk specific gravity results for these samples were tabulated and the results for individual samples which were reported by the Central laboratory were subtracted from the results reported by the Region laboratories.

Test results reported by each of the six Region laboratories were compared to the results

from the CDOT Central laboratory for the 1993 and the 1994 paving seasons. Comparisons of data for the 1993 paving season showed that the bulk specific gravity results reported by every CDOT Region laboratory were statistically different from the results reported by the CDOT Central laboratory.

Figure 1 shows individual bulk specific gravity results reported during 1993 by the CDOT Central laboratory subtracted from the results reported by a single CDOT Region laboratory. Each point on the graph represents the difference between the reported bulk specific gravity from the CDOT Central laboratory and a CDOT Region laboratory for material sampled at the same time from the same paving project.

It can be seen that one laboratory reported a consistently different bulk specific gravity from the other laboratory. This indicated that some aspect of the compaction procedures used at the two laboratories was not the same.

2.2 Testing the Statistical Significance of Differences

The first question to be examined was whether the test result differences which were being observed could have occurred by random chance. The Student's *t* test was used to determine whether the true difference between laboratory results could have been equal to zero. The true difference is the mean difference which would be observed if hundreds of samples were tested and the results compared. The observed difference is the mean difference which was observed with the limited data gathered during this investigation.

Two possibilities were considered. The first was that there was no true difference in the test procedures being used. That is, any observed difference in test results was caused by random chance. The other possibility was that there was a true difference in the test procedures being used. This would be indicated by an observed difference in the test results large enough that it could not reasonably occur by random chance.

Observed differences between individual, matched test results reported by Region laboratories and the Central laboratory were tabulated. The mean and standard deviation of the observed differences were calculated. A 95 percent confidence interval for the true difference was calculated from the mean and standard deviation of the observed differences. This confidence interval is the range of differences in which there is a 95 percent chance of finding the true difference. The equation for the possible range of true differences is:

$$\bar{D} - \frac{t_{0.05} \times s}{\sqrt{n}} \leq \mu_D \leq \bar{D} + \frac{t_{0.05} \times s}{\sqrt{n}}$$

μ_D	=	the true mean difference of the entire population being sampled from
$\bar{D}$	=	the mean difference of the observations in this investigation
$t_{0.05}$	=	1.960 for a large number of observations and a 95% confidence interval (varies with n)
s	=	the standard deviation of the observed differences
n	=	the number of results used to find the observed difference

If the 95 percent confidence interval for the true difference includes zero, then it is possible that the true difference is equal to zero. If the 95 percent confidence interval does not include zero, then there is less than a 5 percent chance that there is no true difference in the results being reported by the two laboratories. This indicates that the difference in results reported by the two laboratories is statistically significant.

2.3 Differences in Average Sample Measurements

During the 1993 paving season, there were statistically significant differences between the results being reported by every CDOT Region laboratory and the CDOT Central laboratory.

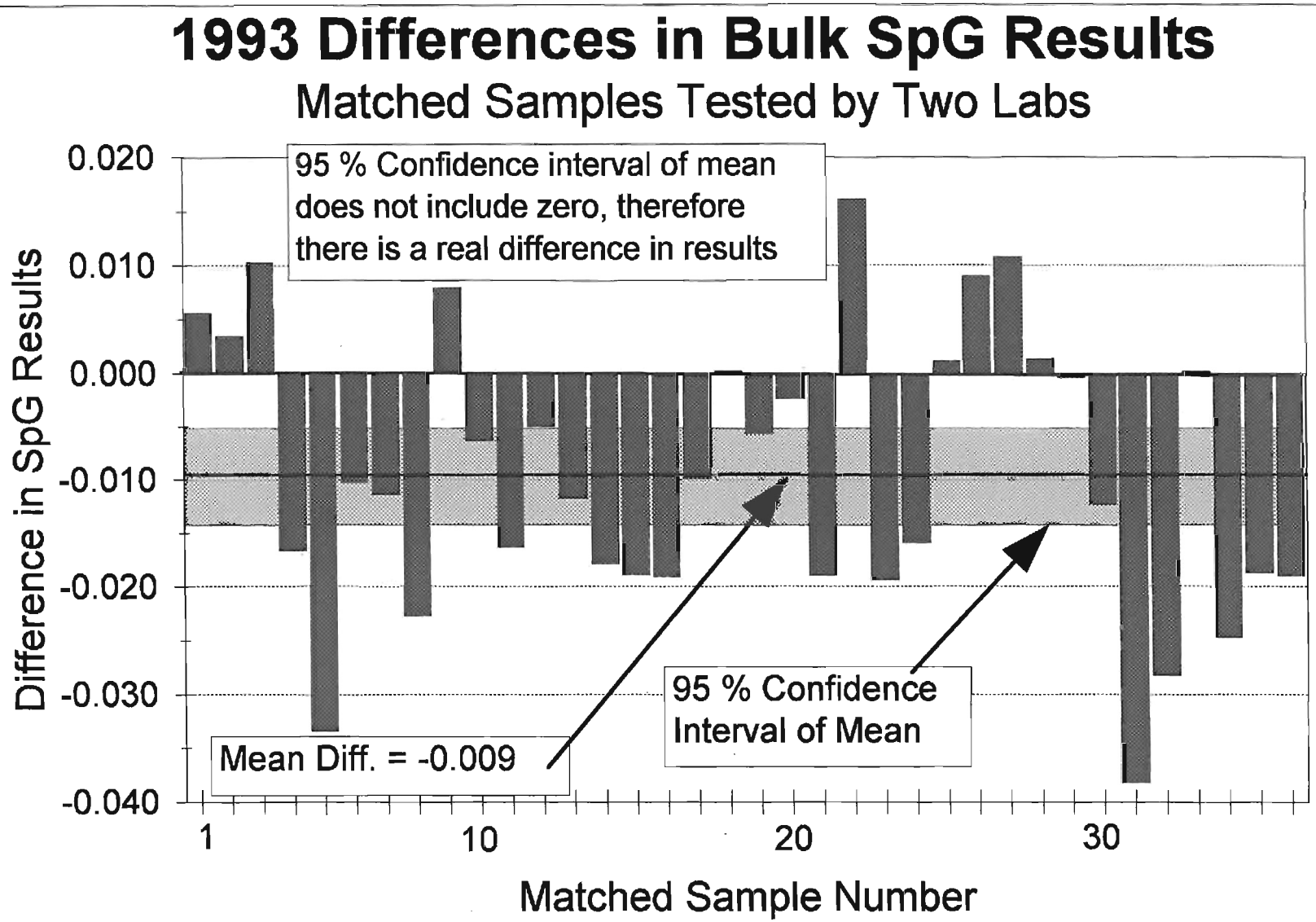

Figure 1: Differences in reported bulk specific gravity for matched samples tested by one CDOT region lab and the CDOT Central lab

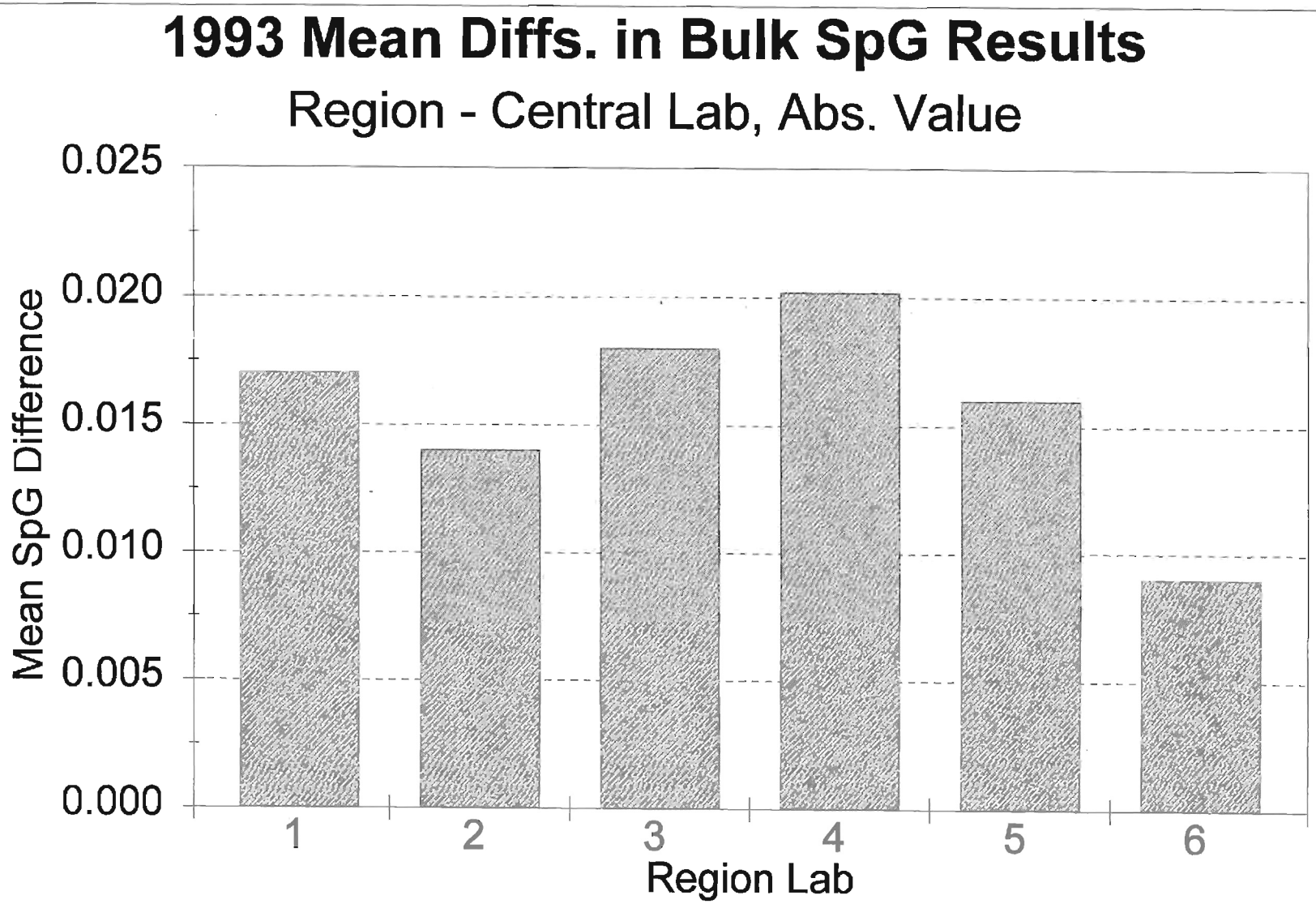

Figure 2: Mean differences of bulk specific gravities for the 1993 paving season for six labs

To put the between-laboratory differences seen in Figure 2 into perspective, a difference of 0.02 in the bulk specific gravity measurement will correspond to a difference in the air void content of approximately 0.8%. This means that, other things being equal, during the 1993 paving season the average of all air void measurements reported by laboratory #4 would have been 0.8% different from the average of all air voids reported by the CDOT Central laboratory.

During Colorado's ongoing move to voids acceptance, a pilot project found differences in bulk specific gravity measurements large enough to affect pay factors for HMA. It became apparent that these differences in test results had to be eliminated to maintain the credibility of the program.

3.0 INVESTIGATION

3.1 Initial Response

This investigation was conducted in two phases. First, laboratory equipment calibration needs were addressed and then the compaction procedure was standardized.

Once it was determined that the inter-laboratory reproducibility of the bulk specific gravity results was a problem, an effort was begun to determine the cause of the differences between the test results reported by different laboratories. It was thought that the most efficient method to discover the causes of the test result variation would be to divide the operation into its component parts and test the parts two by two. For instance, since the results were different between different laboratories but seemed to be the same for different testers in the same laboratory, it was initially assumed that the differences were caused by variation in the equipment in each laboratory.

3.2 Equipment Calibration Procedure

The initial assumption that variations in laboratory equipment calibration were causing test result variation was addressed first.

The equipment checks which were routinely performed by the CDOT Central laboratory were documented and an estimate of a reasonable frequency for these equipment checks was made to produce a calibration verification checklist for laboratories testing HMA. These standardized equipment checks allow all laboratories to conduct thorough, documented verifications of their equipment. They also allow CDOT to effectively communicate known equipment calibration concerns to all laboratories.

The checklist that was produced was given to all of the CDOT and private laboratories in the state which use the Texas gyratory compactor. As part of the investigation, equipment checks were also performed in many CDOT and private laboratories. Equipment which was out of calibration was discovered in almost every laboratory visited.

Once the equipment checks were carried out, persistent between-laboratory differences were still found in the reported bulk specific gravities of compacted samples. Fortunately, there was an immediate reduction in the occurrences of test results which were so different that they caused emergency meetings to try to find the cause.

By reducing completely unpredictable differences in test results, equipment calibration made it possible to obtain data which was precise enough to allow further research into the root cause of the underlying reproducibility problems.

The equipment checks concerning volumetric properties of HMA fell into three categories:

1) temperatures of ovens and water baths
2) compactor measurements and gage accuracy
3) Rice temperatures and vacuum measurement

The details of Colorado's equipment calibration verification procedure are contained in Colorado CP-L 5101, *Verification of Laboratory Equipment Used to Test Bituminous Mixtures* (Appendix 1). As new equipment calibration problems are discovered, new sections are added to the procedure to instruct all laboratories to check for these problems.

3.3 Problem Definition

Once equipment calibration errors were reduced to as low a level as possible, there were still differences in the average bulk specific gravity results being reported by different CDOT laboratories.

Comparisons were run in which two testers compacted five samples each in two different laboratories. A total of 4 sets of 5 samples were compacted. The results from one of these experiments is shown in Table 1.

Table 1. Results from a typical two operator, two laboratory compaction experiment.

Average Bulk Specific Gravity (5 samples for each result)

	Laboratory 1	Laboratory 2	**Average**
Operator 1	2.397	2.402	**2.400**
Operator 2	2.396	2.393	**2.395**
Average	**2.397**	**2.398**	

By examination, it is difficult to determine whether the differences in results were caused by the laboratory, the operator, or an interaction such as when an operator uses machines and equipment they are not familiar with.

Fortunately, when the results from different laboratories were matched by the order that they were compacted and compared using a paired sample *t* test (Section 2.3), the data turned out to be statistically indistinguishable. When the results from different operators were matched by the order that they were compacted and compared using a paired sample *t* test, the differences turned out to be statistically significant at the 95 percent confidence level.

This experiment, as well as others, indicated that it was the operator's compaction style and not the laboratory equipment which was the cause of the difference in test results.

Next, an effort was made to identify which factors were causing the differences in test results between operators. To assist in the analysis, the operations required to compact a sample were divided into the following categories:

1) heating of the loose material to compaction temperature
2) loading of the loose material into the mold
3) operation of the Texas gyratory compactor
4) measurement of the sample's bulk specific gravity

Step one (standardized heating) and step four (standardized measurement of sample bulk specific gravities) had already been addressed during the equipment calibration phase of the investigation. These steps were therefore ruled out as causes of differences in the reported bulk specific gravity measurements.

3.4 Texas Gyratory Compactor Operation Standardization

The compaction process was analyzed first. It was determined that the movement and timing specified by the procedure could be standardized exactly. A method of compacting was developed which standardizes every movement made by the operator of the gyratory compactor. The method uses the sound of the Texas gyratory compactor's counter mechanism (which produces one click per second) as a metronome which times the operations required to compact a sample.

The compaction method which was developed and adopted is described in Appendix 2.

When this compaction method was first introduced, it was not popular with experienced testers since it forced them to slow their operation of the gyratory compactor. This was necessary to allow novice testers to perform the same operations in the same amount of time as experienced testers.

Fortunately, operator acceptance rose dramatically once the method was shown to reduce the differences in test results generated by testers of widely varying experience levels who were testing material in the same laboratory.

Unfortunately, the compaction method which had been developed with a core group of operators did not work as well when it was introduced to the rest of the operators in the state. When laboratories which had not participated in the original compaction standardization effort were asked to use the new method, the inter-laboratory differences in sample bulk specific gravity measurements immediately reappeared. The search for the cause of the differences continued.

3.5 Loading Procedure Standardization

Another compaction experiment was conducted using two testers who were still reporting different test results while using the newly standardized compaction method. Each tester compacted three samples without being observed by the other tester. Three samples were then compacted while the other tester watched. It was immediately obvious that the loading techniques which the testers were using to load loose samples into the mold were very different.

For the last three samples, the testers used the same loading procedure to load their samples into the mold. The specific gravity results generated by the two operators for these samples were statistically indistinguishable.

In an effort to identify a standardized loading procedure which would be acceptable to all testers, a panel of CDOT and private laboratory testers was brought together and given the task of identifying and testing a loading technique which would:

1) minimize segregation as much as possible.
2) be easily described and performed in a very standard way.
3) be teachable to an inexperienced tester and be correctly done by him or her an hour later.
4) have high operator acceptance to minimize the chances for intentional modification of the procedure to increase production or decrease the effort required.

The panel identified an acceptable method. The method was then tested and refined in the CDOT Central laboratory during the compaction of approximately 50 sets of samples from various paving projects.

The method which was identified:

1) has very strict limits on the time taken from oven to the first gyration. It was found that 65 $\pm$ 10 seconds was acceptable to both novice and experienced testers.
2) involves mixing the material and dumping it directly into the mold.
3) allows no rodding or other disturbance of the sample once it has been placed into the mold.

Minimization of segregation during the loading procedure was thought to be a very high priority. It was thought that segregation within the sample would have unpredictable effects on the bulk specific gravity of specimens.

3.6 Tester Training

As soon as the standardized loading and compaction techniques were identified, CDOT immediately documented the techniques into a formal procedure, CP-L 5105, *Standard Practice for Preparation of Test Specimens of Bituminous Mixtures by Means of Gyratory Shear Compactor* (Appendix 2). All CDOT testers were trained in the new procedure and every private laboratory in Colorado which owned a Texas gyratory compactor was sent the new procedure. Private laboratory supervisors were also encouraged to send two or three of their testers to visit the CDOT Central laboratory whenever they had the time. The testers then participated in informal, 30 to 60 minute training sessions in which they observed and practiced the standardized compaction process.

The training was found to be an essential step in achieving reproducible results. It is thought that, in the future, more formal tester training will be conducted in a joint effort between CDOT and the Colorado Asphalt Pavement Association.

4.0 RESULTS

To obtain inter-laboratory reproducibility of bulk specific gravities of compacted samples using the Texas gyratory compactor, certain steps were found to be absolutely necessary.

These steps were:

1) formal, scheduled equipment calibration verification had to be carried out in all laboratories testing asphalt mixes
2) the timing and procedure for loading of loose mix into the mold had to be standardized to a very high degree
3) the timing and procedure for compaction had to be standardized to a very high degree

4.1 Accuracy and Precision of Measurements

Accurate test results should have little or no consistent variation. Consistent variation is measured by the mean differences between test results from different laboratories.

Precise test results should have low random variation. Random variation is measured by the standard deviation in the differences between test results from different laboratories.

4.2 Laboratory Comparisons, 1993 and 1994

4.2.1 Accuracy

Table 2 and Figure 3 show comparisons of the average differences in bulk specific gravity results between each of the six CDOT Region laboratories and the CDOT Central laboratory for the 1993 and 1994 paving seasons. The 1993 results were generated before the standardization effort had started while the 1994 results were generated after

all of the CDOT testers had been trained in the standardized procedures of loading and compaction.

As Figure 3 shows, there were large increases in the accuracy of the bulk specific gravity results between 1993 and 1994. Absolute average differences in test results between the six CDOT Region laboratories and the CDOT Central laboratory decreased from a six-laboratory average of 0.016 in 1993 to 0.002 in 1994.

Table 2. Comparison of 1993 and 1994 observed differences in bulk specific gravity measurements reported by the CDOT Central laboratory and the six CDOT Region laboratories.

	1993 Season			1994 Season		
Laboratory Comparison	n	Mean Difference	Standard Deviation	n	Mean Difference	Standard Deviation
Region 1 - Central	18	-0.017	0.018	38	0.000	0.012
Region 2 - Central	11	-0.014	0.009	68	0.007	0.010
Region 3 - Central	11	-0.018	0.008	66	0.001	0.012
Region 4 - Central	11	-0.020	0.018	43	0.001	0.011
Region 5 - Central	11	-0.016	0.008	19	-0.001	0.018
Region 6 - Central	36	-0.009 *	0.013 *	52	0.002	0.011

* - Excludes 15 observations made while the gyratory compactor was known to be malfunctioning.

During 1993, the CDOT Central laboratory reported bulk specific gravity results which were higher than all of the Region laboratories. This may have been caused by the

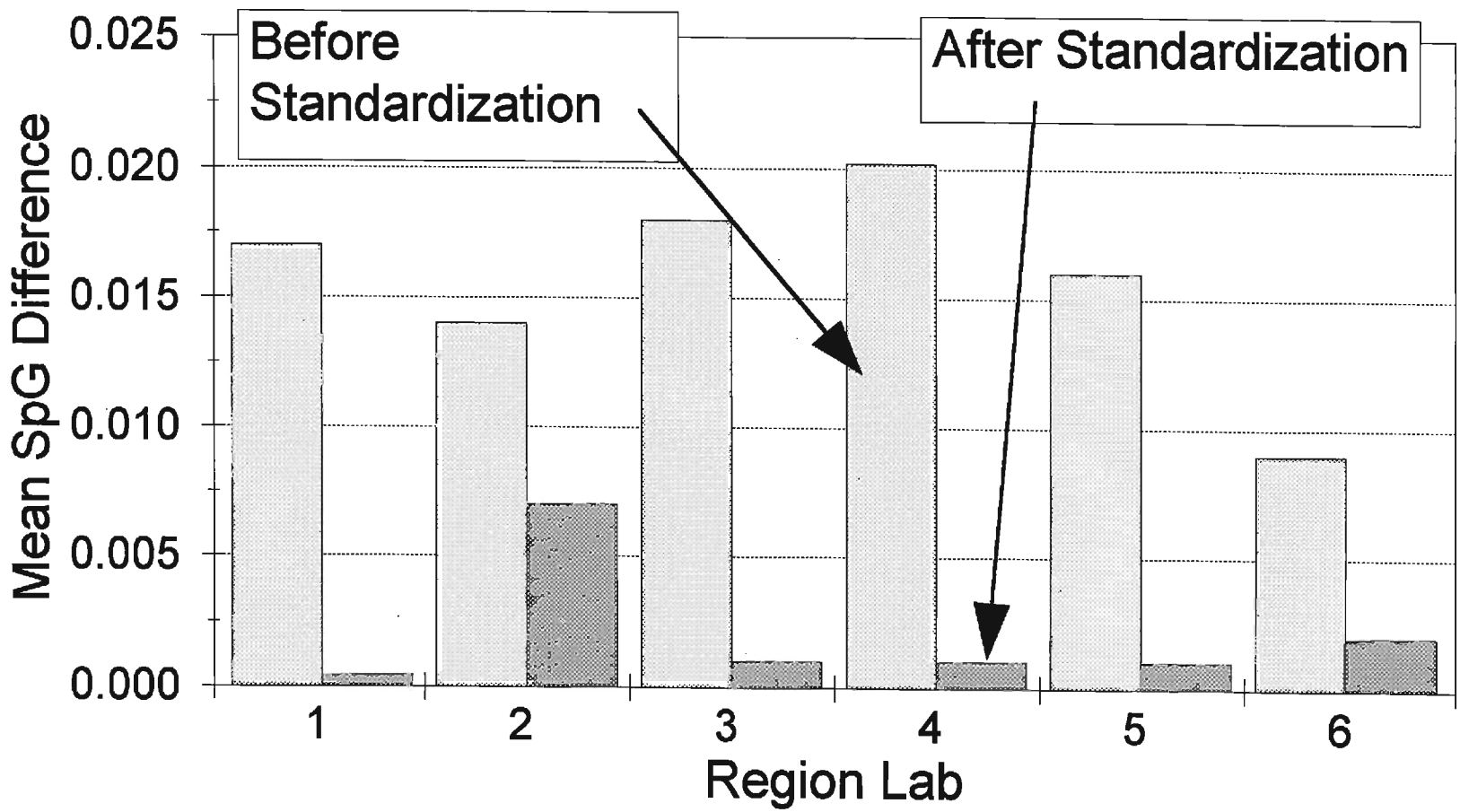

Figure 3: Mean differences of bulk specific gravities for the 1993 and 1994 paving seasons for six labs

greater speed of gyratory compactor operation by testers at the Central laboratory than by testers in the Region laboratories.

During 1994, one Region laboratory's results still showed a statistically significant difference from the Central laboratory results which is, as yet, unexplained.

4.2.2 Precision

From 1993 to 1994, some of the laboratories saw an increase in the precision, as measured by the standard deviation, of their test results while others saw a decrease in precision. The small number of observations during 1993 for some of the laboratories may have led to inaccurate measurements of the standard deviations of their results. The standard deviations were much more consistent from laboratory to laboratory during 1994 when all but one of the laboratories reported more than 35 tests each.

CDOT generated more test data during the 1994 paving season than during the 1993 paving season. This partially reflects the increased confidence that CDOT personnel had in the results being reported by the various CDOT laboratories during the 1994 paving season and the related increased demand by project personnel for test results. It also may have reflected higher morale on the part of the Region laboratory testers caused by the increased reproducibility of their test results.

5.0 DISCUSSION

5.1 Mechanism

The mechanism which causes the increase in reproducibility of the results is unknown. It has been speculated that variation in compaction results may be caused by differences in the amount of heat carried away from the HMA by the mold. The heat carried from the sample to the mold is thought to be time dependant. By reducing the variability of

the heat loss from the sample, the variability in the test results may also have been reduced.

5.2 Implications for the Superpave Gyratory Compactor

These findings have potential implications for the superpave gyratory compactor procedure.

Equipment which was out of calibration was discovered in almost every laboratory which was visited. This points to a need for a standardized laboratory equipment verification procedure which would be thorough and easy to follow. Laboratories following the superpave gyratory compactor procedure will need to calibrate their equipment in a very similar manner to laboratories which use the Texas gyratory procedure. Following a standardized verification procedure such as CPL 5101 (Appendix 1) makes equipment verification easier and more thorough.

The standardization of the compaction method is not an issue with the superpave gyratory compactor since the compactor is completely automated.

From CDOT's experience during this investigation, it is thought that the mold heating and loading procedure for the superpave gyratory compactor should be standardized to a very high degree at the outset. A loading method which minimizes segregation, has strict time and temperature specifications, and has high operator acceptance, is critical to obtaining results which will be repeatable between all laboratories.

5.3 Acceptance of Volumetric Results by Project Personnel

Contractors and project personnel are more likely to use test results which are credible and repeatable to control the volumetric properties of HBP during production. One indication of this was the large increase in the number of samples which were tested

during the 1994 paving season over the number tested during the 1993 season.

6.0 CONCLUSIONS

The following conclusions were drawn from this investigation:

1) For the Texas gyratory compactor, compaction test results can be made repeatable from laboratory to laboratory by standardizing the loading and the compaction procedure. This investigation found a decrease in average mean differences of bulk specific gravity results between laboratories from 0.016 or 0.64% air voids before standardization to 0.002 or 0.08% air voids after standardization.
2) A scheduled, equipment calibration procedure was found to be necessary to get test result precision in asphalt testing laboratories.
3) The precision and accuracy of test results are affected by the experience and training of the testers.
4) Continuous follow up of laboratory reproducibility statistics is necessary to ensure that testing quality is maintained. This may be accomplished by acceptance testing procedures and round robin testing.
5) The precision of the bulk specific gravity test results (as measured by their standard deviation) did not uniformly increase after procedure standardization was introduced. The reasons for this are unclear although limited data from 1993 (before standardization) for many laboratories may have led to inaccurate measurement of test result standard deviation for 1993's results.

7.0 RECOMMENDATIONS

1) All procedures for compacting HMA samples should have very strict time and method specifications for loading loose mixture into the mold and for compaction.
2) Documented equipment calibration should be required from all laboratories testing HMA.
3) The current loading procedures of SHRP M-002 and AASHTO TP4 should be examined and unified before they become widely used. It is hoped that the resulting procedure will take into account the findings of this investigation.
4) Tester training should be considered as essential in the effort to obtain inter-laboratory reproducibility of test results. Documentation of tester training will almost certainly be necessary as voids acceptance is implemented.

8.0 REFERENCES

1) Matthew Witczak and Chuck Hughes, An Investigative Study of the Colorado Department of Transportation Asphalt Mixture Design Procedure, Aguirre Engineers, Englewood, CO, Nov. 1993.

2) Paul Krugler, Maghsoud Tahmoressi, and Dale Rand, Improving the Precision of Test Methods used in VMA Determination. Journal of the Association of Asphalt Paving Technologists, Vol 61, 1992, pp 272-303

APPENDIX A

Colorado CP-L 5101, Verification of Laboratory Equipment Used to Test Bituminous Mixtures, Colorado Department of Transportation, Dec. 1994

Colorado Procedure
L 5101

Method of Test For

Verification of Laboratory Equipment used to Test Bituminous Mixtures

1. Scope

1.1 This method of test covers the verification of laboratory equipment used to test bituminous mixtures and provides documentation that the verification has been done.

2. Referenced Documents

2.1 *CP-L Procedures*

2.2 *AASHTO Standards*

T 27 Sieve Analysis of Fine and Coarse Aggregates

T 209 Maximum Specific Gravity of Bituminous Paving Mixtures

T 246 Resistance to Deformation and Cohesion of Bituminous Mixtures by Means of Hveem Apparatus

T 283 Resistance of Compacted Bituminous Mixture to Moisture Induced Damage

2.3 *ASTM Standards*

D 4013 Preparation of Test Specimens of Bituminous Mixtures by Means of Gyratory Shear Compactor

3. Terminology

3.1 *Daily Verification* - Verification procedures which are carried out each day the laboratory equipment is used for testing. The verification is documented once per month.

3.2 *Weekly Verification* - Verification procedures which are carried out approximately once per week while the laboratory equipment is being used for testing. The verification is documented once per month.

3.3 *Monthly Verification* - Verification procedures which are carried out approximately once per month while the laboratory equipment is being used for testing. The verification is documented.

3.4 *Annual Verification* - Verification procedures which are carried out approximately once per year. This may be done at the same time as the equipment is being calibrated. The verification is documented.

4. Apparatus

4.1 *Thermometers* - Conforming to the requirements of ASTM. The thermometers shall be capable of reading 77°F by 0.2°F (25°C by 0.1°C), 140°F by 0.2°F (60°C by 0.1°C), 250°F by 0.5°F (121°C by 0.2°C).

4.2 *6° angle plate*--machined from aluminum, steel, or plastic (plexiglass or similar material). The plate should be between 5 in. and 6 in. (12.5 and 15 cm) wide and 2 in. (5 cm) high at the

shorter end. The top side must slope upward at an angle of 6° relative to the bottom side.

4.3 *Metal straight edge* - 6 in. (15 cm) long.

4.4 *2 in. (50 mm) height standard* - accurate to at least 0.001 in. (0.025 mm).

4.5 *Vernier caliper* - or other measuring device capable of measuring 0 in. to 6 in. (0 to 15 cm) by 0.001 in. (0.02 mm).

4.6 *Inside diameter telescoping gage* - capable of measuring a 4 in. (10 cm) interior diameter with an accuracy of 0.001 in. (0.025 mm).

4.7 *Dial gauge* - with a total range of at least 0.20 in. (5.0 mm) with graduations of 0.0001 in. (1/10,000 in.)(0.0025 mm).

4.8 *#11 rubber stoppers* - 3 pieces, or hard rubber blocks cut to similar size.

4.8 *Reference cylinder of known bulk specific gravity* - A cylindrical aluminum sample of approximately 4 in. (10 cm) diameter and 2 in. (5 cm) high and weighing between 1000 grams and 2000 grams which has been weighed both dry and submerged in 77°F (25°C) water using a scale known to be accurate, preferably a scale in a different laboratory.

5. Procedure

5.1 The following verification procedures are to be routinely carried out. If there is any question about the calibration of equipment, the verification procedures relating to the equipment must be carried out immediately.

5.2 If the verification procedure indicates that a problem exists, the problem must be addressed before further testing is conducted using the equipment.

5.3 Air temperature verification procedures may be done by placing a pan of fine aggregate into the incubator or oven for at least 5 hours and then measuring the sand temperature with a thermometer.

6. Daily Equipment Verification

6.1 Verify daily that the water bath used in CP-L 5103 (AASHTO T 166) is 77 ± 1.8°F immediately before the bulk specific gravities of compacted samples are measured.

6.2 Verify daily that the temperature of the water baths used in CP-L 5109 (AASHTO T 283) are at 77 ± 1.8°F (25 ± 1°C) and 140 ± 1.8°F (60 ± 1°C). The 77°F water bath temperature should be checked immediately before samples are tested.

6.3 Verify daily that the ram face of the Texas gyratory compactor used in CP-L 5105 (ASTM D 4013) cannot be turned by hand with high effort.

6.4 Verify daily that the Texas gyratory compactor is not leaking hydraulic fluid from any pumps, cylinders, fittings, or from the control block.

6.5 Verify daily that the low and high pressure circuits of the Texas gyratory compactor are not losing pressure during machine operation. This should be done monthly by placing two base plates beneath the ram face, lowering the ram face to contact the plates, raising the pressure to approximately 150 psi and observing the rate of pressure loss. This may also be done daily by observing the rate of pressure drop when samples are almost fully compacted.

6.6 Verify daily that the stabilometer is calibrated correctly using the calibration cylinder

and procedure specified in CP-L 5106 (AASHTO T 246).

7. Weekly Equipment Verification

7.1 Verify weekly that the oil in the vacuum pump used in CP-L 5102 (AASHTO T 209) is not contaminated with water. Examine the desiccating crystals and oven dry them when necessary

7.2 Verify weekly that the liquid in the stabilometer specified in CP-L 5106 (AASHTO T 246) is free from air bubbles by rolling the stabilometer around with the valve oriented upwards and tapping the stabilometer body with a rubber mallet.

7.3 Verify at least weekly that the testing machine settings used to test Hveem stabilities and Lottman tensile strengths yield testing head speeds of 0.050 in. (0.13 cm) per minute and 0.20 in. (0.51 cm) per minute respectively. This may be done by testing a sample which has been previously tested and is at test temperature.

8. Monthly Equipment Verification

8.1 Verify monthly that the temperature of the incubator is at 77 ± 1.8°F (25 ± 1°C).

8.2 Verify monthly that the oven thermostats are maintaining the temperature of the 140 ± 5°F (60 ± 2.8°C) oven and the 250 ± 5°F (121.3 ± 2.8°C) oven.

8.3 Verify monthly that the mercury in the manometer used to measure the vacuum applied to samples is free of air bubbles.

8.4 Oven dry the desiccating agent in the vacuum pump setup (indicating silica gel, 6-16 mesh, has been found to work for this purpose).

8.5 Verify the weights of the flasks used to measure the maximum specific gravity in CP-L 5102 (AASHTO T 209). The weights are measured with the flasks full of 77 ± 1°F (25 ± 0.5°C) water and covered by the same cover plate that is used during the test. If you are using temperatures other than 77°F (25°C) in CP-L 5102 (the Rice test), prepare a chart of flask weight vs. water temperature containing at least 5 points which should span all of the temperatures you will be using.

8.6 Verify monthly that the top edge of the stabilometer diaphragm is 3.5 in. (88.9 mm) above the stabilometer base using a metal ruler. If the correct base position is not marked on the base then this measurement must be checked daily.

8.7.1 Verify that the inside diameter of each Texas gyratory mold being used to compact Hveem samples is 4.010 ± 0.002 in. (101.85 ± .05 mm) at a point approximately 0.5 in. (12 mm) above the bottom edge of the mold when the mold is at room temperature.

8.7.2 Verify that the inside diameter of each Texas gyratory mold being used to compact Lottman samples is 4.010 ± 0.006 in. (101.85 ± .15 mm) at a point approximately 0.5 in. (12 mm) above the bottom edge of the mold when the mold is at room temperature. Molds which no longer have the correct inside diameter for Hveem samples may be used to compact Lottman samples until they fail to meet the less stringent diameter specification for molds used to compact Lottman samples.

8.8 Verify that the Texas gyratory ram face and bottom plates are not worn by holding a metal straightedge ruler next to them. Use an allen key to verify that the hex bolts holding the ram face to the piston are tightened.

8.9 Verify the Texas gyratory ram face displacement which corresponds to a single stroke of the metering pump (high pressure pump). Use a dial gauge capable of measuring 0.0001 in. (.0025 mm) to confirm that a single stroke of the metering pump produces a ram face movement of 0.020 in. (0.508 mm). By loading three #11 or #12 rubber stoppers to resist the load and by using mold bases as metal spacers, the ram face movement may be confirmed at a pressure of about 50 psi (345 kPa) gage reading. This verification must be done each time the metering pump is rebuilt.

8.10 Verify that the tilt of the Texas gyratory compactor mold is 6° by sliding the 6° angle plate beneath the mold track after a sample has been gyrated and before the tilt cam handle has been raised. Check that the wear stripe on the tilt bearings is less than 3/16 in. wide.

8.11 Verify that the gage used to measure the height of samples for CP-L 5106 (AASHTO T 246) is accurate using the 2 in. (50.8 mm) height standard.

8.12 Verify that the freezer temperature is 0 ± 5°F (-18 ± 3°C).

8.13 Verify that all scales are level.

8.14 Verify the scale readings using a reference weight or weights.

8.15 Verify that the weights of the reference cylinder of known bulk specific gravity when dry and when submerged in 77°F (25°C) water are within 0.2 grams of the weights recorded earlier when using a different scale known to be accurate.

8.16 Verify that the #200 (75 μ) sieve screen used for aggregate washes is free from holes and is tight.

8.17 Verify that the sieve screen mesh used for gradations are tight and that there are no holes in the screens.

9. Annual Equipment Verification

9.1 Many of the annual verification steps are best carried out by a certified calibration service.

9.2 Verify the time that aggregate sieving is done by running the sieving adequacy test defined in AASHTO T 27-93.

9.3 Verify the readings of the Texas gyratory compactor's pressure gages by using a load cell which can withstand at least 20,000 lbs. (89 kN) The load reading on the load cell in lbs. should be 8.0 times higher than the gage pressure reading in psi.

9.4 Verify the readout on the testing machine for accuracy using a load cell.

9.5 Verify that the outside diameter of the Hveem stabilometer calibration cylinder is 4.000 ± 0.005 in. (101.6 ± 0.13 mm).

CP-L 5101 - Checklist for Lab Equipment Calibration

Photocopy this sheet and keep a dated record of each calibration procedure. Write any necessary notes on the back of this sheet or on additional sheets stapled to this one

Tester _____ Date (1)_____

Tester _____ Date (2)_____

Tester _____ Date (3)_____

Tester _____ Date (4)_____

Daily (record monthly)

		(1)	(2)	(3)	(4)
6.1	Bulk specific gravity water bath at 77 ± 1.8°F	___/	___/	___/	___
6.2	Water baths for Lottman - 77 ± 1.8°F	___/	___/	___/	___
	- 140 ± 1.8°F	___/	___/	___/	___
6.3	Texas gyratory compactor ram face can not rotate	___/	___/	___/	___
6.4	Texas gyratory compactor not leaking fluid	___/	___/	___/	___
6.5	Texas gyratory compactor not losing pressure	___/	___/	___/	___
6.6	Stabilometer calibrated	___/	___/	___/	___

Weekly

7.1	No water in vacuum pump oil, crystals dry	___/	___/	___/	___
7.2	Stabilometer free of air bubbles	___/	___/	___/	___
7.3	Testing head speed - Hveem - 0.050 in./min.	___/	___/	___/	___
	- Lottman - 0.200 in./min.	___/	___/	___/	___

Monthly

8.1	Incubator temperature - 77 ± 1.8°F	___/	___/	___/	___
8.2	Oven Temperatures - 140 ± 5°F	___/	___/	___/	___
	- 250 ± 5°F	___/	___/	___/	___
8.3	Manometer mercury free of air bubbles	___/	___/	___/	___
8.4	Oven dry desiccating crystals	___/	___/	___/	___
8.5	Weights of Rice flasks with water and lids	___/	___/	___/	___
8.6	Ring 3.50 in. above stabilometer base	___/	___/	___/	___
8.7.1	Hveem mold inside diameters 4.010 ± 0.002 in.	___/	___/	___/	___
8.7.2	Lottman mold inside diameters 4.010 ± 0.006 in.	___/	___/	___/	___
8.8	Check ram face and bottom plates for wear/ram face tight	___/	___/	___/	___
8.9	Texas gyratory ram face, 0.020 in. at about 50 psi	___/	___/	___/	___
8.10	Gyratory mold tilt 6°, bearings not worn	___/	___/	___/	___
8.11	Sample height gauge accurate at 2.000 in.	___/	___/	___/	___
8.12	Freezer temperature 0 ± 5°F	___/	___/	___/	___
8.13	Scales level	___/	___/	___/	___
8.14	Scales accurate	___/	___/	___/	___
8.15	Reference cylinder measured accurately	___/	___/	___/	___
8.16	#200 wash screen in good repair	___/	___/	___/	___
8.17	Gradation screens in good repair	___/	___/	___/	___

Annually

9.2	Sieving adequacy	_____
9.3	Texas gyratory pressure gauge accuracy	_____
9.4	Loading machine load readout accuracy	_____
9.5	Stabilometer calibration cylinder is 4.000 ± 0.005 in.	_____

APPENDIX B

Colorado CP-L 5105, Standard Practice for Preparation of Test Specimens of Bituminous Mixtures by Means of Gyratory Shear Compactor, Colorado Department of Transportation, Dec. 1994

Colorado Procedure
L 5105

Method of Test For

Standard Practice for Preparation of Test Specimens of Bituminous Mixtures by Means of Gyratory Shear Compactor

ASTM D 4013 - 81

1. Scope

1.1 This practice covers the preparation of 10 cm or 4 in. diameter test specimens of bituminous mixtures containing -22.4 mm (-7/8 in.) aggregate.

1.2 The values stated in SI units are to be regarded as standard.

1.3 This standard may involve hazardous materials, operations, and equipment. This standard does not purport to address all of the safety problems associated with its use. It is the responsibility of the user of this standard to establish appropriate safety and health practices and determine the applicability of regulatory limitations prior to use.

2. Referenced Document

2.1 *ASTM Standard*:
E 4 Practices for Load Verification of Testing Machines

3. Summary of Practice

3.1 This practice employs gyratory-shearing action of the mixture at low initial pressures allowing orientation of the aggregate particles to aid compaction, and then nongyratory compression at high pressure for consolidation and shaping.

4. Significance and Use

4.1 The specimens are compacted to simulate the density, aggregate degradation. and structural characteristics possible in the actual road surface when proper construction procedure is used in the placement of the material. The specimens may be used to determine stability, density, strength, water susceptibility, etc., of bituminous mixtures by specified test methods.

5. Apparatus

5.1 *Gyratory-Shear Molding Press:*

5.1.1 *Press Platen*, which is hardened and ground flat.

5.1.2 *Hydraulic Compaction Ram*, with nonrotating metal face as shown in Figs. 1 and 2. The ram face is hardened and ground flat. The ram varies the vertical opening between the ram face and the press platen from +11 cm (4.5 in.) down to less than 2.5 cm (1.0 in.).

5.1.3 *Low-Pressure Gage*, with automatic valve for high pressure protection and with a capability of indicating within ±2 kPa (±0.3 psi) the following:

5.1.3.1 *Pregyration Stress*--219 kPa (31.8 psi on sample, 50 psi on gage), which is 1779 N (400 lbf) total for 10 cm or 4 in. diameter specimens.

5.1.3.2 *End Point Stress*--657 kPa (95.3 psi on sample, 150 psi on gage), which is 5338 N (1200 lbf) total for 10 cm or 4 in. diameter specimens.

5.1.4 *High-Pressure Gage*, with capability of indicating within ±110 kPa (±16 psi) the following:

5.1.4.1 *Consolidation Stress*--11.0 MPa (1590 psi on sample, 2500 psi on gage), which is 89 kN (20 000 lbf) total for 10 cm or 4 in. diameter Hveem specimens. Lottman specimens shall be consolidated as specified in section 12.1.2.

NOTE 1 The pregyration stress, the end point stress and the consolidation stress may be specified to have values other than those given above. The gage end point stress is found in the project plans in Table 403-1 in the project special provisions. The gage pregyration stress and consolidation stress corresponding to various end point stresses are found in Table 1.

TABLE 1 Gauge Pressures for Variable Compactive Efforts in psi. and (kPa)

Pregyration Stress	End Point Stress	Consolidation Stress
10 (70)	**25** (170)	2500 (17,200)
20 (140)	**50** (340)	2500 (17,200)
20 (140)	**75** (520)	2500 (17,200)
30 (210)	**100** (690)	2500 (17,200)
30 (210)	**125** (860)	2500 (17,200)

5.1.5 *Tilt Mechanism*, to cock the mold 6° while the specimen is under pregyration stress (see 5.1.3.1). In reverse manner, it squares the mold axially against the press platen with a smooth quick motion.

5.1.6 *Gyration Mechanism*, to move the mold about the ram face 12° total angle and produce gyratory shear compaction of the specimen. An electric motor drives the gyration mechanism at approximately 1 s/cycle.

5.1.7 *Count Mechanism*, to shut the gyration motor off after three complete cycles and to stop it in the loading position with an electric brake.

5.1.8 *Hydraulic Hand Pump*, which meters 0.51 mm (0.020 in.) ram movement, with a smooth quick motion.

5.2 *Gyratory Mold*--Rigid metal mold as shown in Figs. 1 and 3, with a concentric hardened ring for manipulating gyratory action, and hardened to at least 55 HRC honed and hard-plated interior.

5.3 *Base Plate*--Solid metal plate as shown in Figs. 1 and 2. Top and bottom surfaces are hardened and ground flat.

5.4 *Wide-Mouth Funnel*, approximately 230 mm (9 in.) in diameter and 75 mm (3 in.) deep with mouth that ~~fits inside~~ conforms to the top inside edge of the mold.

5.5 *Scale or Balance*, having at least 4500 g capacity, sensitive to 0.1 g.

~~5.6 *Sieve or Screen*--A 25 mm (1 in.) screen or 22.4 mm (7/8 in.) sieve.~~

5.7 *Spatula*--A flexible spatula having a blade about 100 mm (4 in.) long and between 25 mm (1 in.) and 50 mm (2 in.) ~~20 mm (3/4 in.)~~ wide.

~~5.8 *Spoon*--A large spoon with a right angle bend between the bowl and handle.~~

5.9 *Measuring Device*--A micrometer dial assembly or calipers for determining the height of

the specimens to within 0.25 mm (0.01 in.) is suitable for this purpose.

5.10 *Specimen Extrusion Device*--A rigid right cylinder, having a minimum height of 115 mm (4 1/2 in.), and a diameter of approximately 98 mm (3 7/8 in.) to be used as a pedestal to allow an operator to press a sample from the mold by hand. ~~with~~ A converted arbor press or some similar device or other methods of specimen extrusion that do not damage the specimen may be used if the specimen cannot be removed from the mold by hand.

5.11 *Oven*, for specimen mixtures and mold assemblies having a range from 38 to 175°C ~~150°C~~ (100 to 350°F ~~300°F~~) and thermostatically controlled to within ±3°C (±5°F).

5.12 *Non-Metallic Surface*--A non-metallic tabletop or a square of 1/4" plywood or other material which thermally insulates the mold and base plate from metallic tabletop surfaces.

5.13 *Miscellaneous*--Thermometers, ~~trowels,~~ gloves, and mixing pans.

6. Materials

6.1 *Kerosene.*

6.2 *Lubricating Oil*, lightweight grade.

6.3 *Paper Disks*, 10.16 cm or 4 in. diameter.

7. Test Specimen

7.1 *Preparation of Mixture*--Prepare the bituminous mixture in accordance with the specified test method.

7.1.1 *Preparation of Plant Produced Samples*--Plant produced material shall be heated in a loosely covered container only until samples of the proper weight can be prepared. A minimum of 3 Hveem samples shall be tested.

7.1.2.1 *Preparation of Laboratory Produced Samples*--Samples produced in the laboratory shall be individually batched using dry or oven-dry aggregates which have been separated into their component sizes. If lime is added to the dry aggregates, it shall be hydrated using the amount of water expected to be added at the plant. The combined aggregates shall be oven dried for a minimum of 2 hours before the addition of asphalt cement. If the moisture loss from the aggregate sample causes the aggregate weight to drop below the target weight enough to cause the actual asphalt cement content to change by more than 0.05 %, the sample will be discarded. Any moisture loss will be corrected for by (1) calculating and reporting the exact percent asphalt cement content of each sample or (2) adding a corrected amount of asphalt cement to achieve the targeted asphalt cement percentage or (3) adding additional aggregate to bring the sample to the target weight. A minimum of 2 Hveem samples shall be tested at each of at least 3 asphalt contents and the tested asphalt contents shall span the target void content. Asphalt cement which is added to the aggregate must be in a container more than 75% full and covered by a loose fitting lid to reduce oxidation if it is in the oven for more than 2 hours.

7.1.2.2 *Temperature at Mixing for Laboratory Produced Samples*--the aggregates and asphalt cement for mixes using normal asphalt cement shall be heated in an oven having a temperature of 149 ± 3°C (300 ± 5°F) for at least 2 hours before mixing. The aggregates and asphalt cement for mixes using rubberized or polymerized asphalt cement shall be heated in an oven having a temperature of 163 ± 3°C (325 ± 5°F) for at least 2 hours before mixing.

7.1.2.3 *Aggregate Mixing of Laboratory Produced Samples*--Samples shall be mixed using a mechanical mixer. Samples shall be mixed until they are thoroughly coated with a minimum mixing time of one minute.

7.2 *Amount of Mixture*--Prepare constant-weighed amounts of bituminous mixture such that the compacted specimen heights are within the tolerances of the specified test method. Initial laboratory produced Hveem specimens shall be prepared with a target aggregate weight of 955 grams. Initial plant produced Hveem specimens shall be prepared with a target total weight of 1000 grams. If the specimen heights for Hveem samples is not in the range of 53.3 ± 2.5 mm (2.1 ± 0.1 in.) the specimen weight shall be corrected. Specimen heights for Lottman samples shall be 63.5 ± 6.5 mm (2.5 ± 0.25 in.) and Lottman specimens shall have an air void content of 7.0 ± 1.0 %. If an initial specimen height is not within tolerances, revise the constant weight of subsequent specimens by multiplying the initial constant weight by the optimum height and dividing by the initial height as follows:

$$\textit{Revised constant weight} = \frac{\textit{(initial constant weight)} \times \textit{(optimum height)}}{\textit{initial height}}$$

7.2.1 *Example*--The specified height is 2.10 ± 0.10 in. ~~2.00 ± 0.25 in.~~ The weight of the initial specimen is selected to be 1000.0 g, ~~2500.0 g,~~ and it is compacted to 2.32 in. The constant weight for the next and subsequent specimens of this mixture should be (1000.0 g x 2.10 in.)/2.32 in.; or 905.2 g. ~~(2500.0 g x 2.00 in.)/2.32 in.; or 2155.2 g.~~

8. Calibration

8.1 *Gage Scales*--The scales on the low- and high-pressure gages may indicate the pressure of the hydraulic system or the force of the ram. Distinct points on the low pressure gage must be determined for pregyration stress (5.1.3.1) and end point stress (5.1.3.2), and one point on the high pressure gage for the consolidation stress (5.1.4.1). These points are shown in table 1.

8.2 *Verification*--The low- and high-pressure gages should be verified annually or whenever the accuracy of the gages is in question on the gyratory-shear molding press at the points determined in 8.1, in accordance with ASTM Method E 4. The ram face displacement corresponding to one full stroke of the high pressure pump should be verified monthly using CP-L 5101.

9. Preparation for Test and Compaction Temperatures

~~9.1 Mix hot-mix asphalt mixtures that contain asphalt cement and compact into test specimens at a temperature of 121 ± 3°C (250 ± 5°F).~~

9.1.1 *Compaction temperatures of plant produced and laboratory produced samples*--Mixtures shall be heated in a forced draft oven having temperatures as follows. Mixtures using normal asphalt cement shall be heated in an oven having a temperature of 121 ± 3°C (250 ± 5°F). Hveem mixtures using rubberized or polymerized asphalt cement shall be heated in an oven having a temperature of 149 ± 3°C (300 ± 5°F). Lottman mixtures using rubberized or polymerized asphalt cement shall be heated in an oven having a temperature of 121 ± 3°C (250 ± 5°F). The mix compaction temperatures are the same as the specified oven temperatures and have the same tolerances.

9.1.2 *Plant produced samples*--shall be heated

in an oven at the temperature specified in 9.1.1 for at least 15 minutes after the mixture has been brought to compaction temperature.

9.1.3 *Laboratory produced samples*--shall be brought to compaction temperature in an oven at the temperature specified in 9.1.1 for not less than 2 hours and not more than 3 hours. The heating time shall be as close to 2 hours as possible.

~~9.2 Place hot-mix, cold-laid mixtures and rock asphalt mixtures in an oven, cure to constant weight at a temperature of 60 ± 6°C (140 ± 10°F) to remove moisture or hydrocarbon volatiles, and mold at a temperature of 38 ± 3°C (100 ± 5°F). Curing to a "constant weight" may be accomplished by drying for a specific period of time that has proven by experiment to be adequate or drying to the point that by observation, based on experience the material is sufficiently dry for testing. Drying should be accompanied by frequent stirring.~~

9.3 The Texas gyratory compactor shall not be used to compact samples of mixture containing aggregate larger than 25.4 mm (1 in.).

~~9.3 If the mixture (such as one obtained from an asphaltic concrete plant) contains aggregate larger than 22.4 mm (7/8 in.), separate the large size aggregate from the sample by means of a 22.4-mm sieve (or a 25.0 mm (1 in.) round opening screen). Use the trowel to rub the material through the sieve, scrape off and recover as much of the fines clinging to oversize particles as possible.~~

9.4 Preheat the mold and base plate for at least 1 hour in an oven ~~to approximately 60 to 93°C (140 to 200°F). For hot-mix cold-laid mixtures and rock asphalt mixtures heat to 38°C (100°F)~~ having the following temperatures. For samples using normal asphalt cement, the oven heating the mold and base plate shall have a temperature of 60°C (140°F). For Hveem samples using rubberized or polymerized asphalt cement, the oven heating the mold and base plate shall have a temperature of 149°C (300°F). For Lottman samples using rubberized or polymerized asphalt cement, the oven heating the mold and base plate shall have a temperature of 121°C (250°F). Make certain that the gyratory mechanism is in proper working order and in the loading position. Connect the motorized gyratory-shear molding press to its electrical outlet, and switch on the gyration mechanism, allowing the press to go through one set of gyrations.

9.5 Place a small amount of lightweight oil in the center of the motorized press platen and a drop or two on the surfaces of the lower bearing. (This is the bearing that "cocks" the mold and gives or creates the gyratory action.) Squirt a small ring of oil around the periphery of the top surface of the mold's ring, in the path that the upper bearing will follow during the gyration. Do not use an excessive amount. When molding a number of specimens, this step should be repeated as appears necessary for adequate lubrication.

9.6 Remove the mold and base plate from the oven and wipe the inside of the mold with a rag lightly moistened with kerosene or light lubricating oil if required, and place them on a non-metallic surface as specified in 5.12. Insert the base plate into the mold with the large diameter up, and cover with a paper disk. Paper disks may be lightly moistened with kerosene to no more than SSD condition. Using the spatula ~~bent spoon~~ and wide-mouthed funnel, transfer the laboratory mixtures, or a weighed quantity of plant mixed material, heated to proper molding temperature, in two approximately equal layers, into the mold. Material should be loaded directly into the center

of the bottom of the mold and efforts should be made to prevent falling material from hitting the funnel or sides of the mold. Efforts should be made to avoid segregation which is noticed as non-uniform rocky areas on the top and sides of molded samples. Do not intentionally place fine material on the top or bottom of the sample. Use the spatula to press down the top of each layer only enough to prevent loss of aggregate. Do not rod or saw around the edge of the sample. ~~Use the small spatula to move any large aggregate a small distance away from any surface that must be molded smooth. Level the top of each layer while pressing the material downward with the spoon.~~ Place a paper disk on top of the mixture and level the top surface of the sample by pressing down on it by hand using the specimen extrusion device. Be careful to avoid loss of material and segregation of particles.

9.7 Slide the hot mold and contents to the edge of the work table, and with a gloved hand holding the base plate in place, transport the mold to the platen of the press. Slide the mold onto the platen and center it in the molding position beneath the ram of the press. Pump the ram down into the center of the mold using moderately paced strokes. Continue pumping until the low pressure gage barely reaches the pregyration stress point (5.1.3.1) and stop pumping immediately. It is normal for the pressure to immediately drop below the pregyration stress after the pregyration stress has been reached. Do not attempt to compensate for this. The time taken between the time the material is removed from the oven until the first gyration shall be 65 ± 10 seconds.

10. Gyratory-Shear Compaction

10.1 Next, simultaneously lift the high pressure pump handle and lower the tilt cam handle completely. If it is not possible to perform both of these operations simultaneously, the high pressure pump handle may be lifted at any time before the end of the three gyrations. One second after the start of the last operation, reset the gyration counter mechanism. One second after starting to reset the gyration counter, switch on the gyrating mechanism.

~~10.1 Immediately tilt the mold to the specified angle of gyration. Be certain that the mold is tilted all the way. The metering pump should be completely full, accomplished by lifting its handle all the way up.~~

10.2 ~~Switch on the gyrating mechanism.~~ The mold is automatically gyrated three times and stopped. The counter mechanism will click at one second intervals. These clicks should be used as a metronome to time the other operations.

NOTE 2 ~~1~~--Experience has revealed that the smoothest operating procedure, and certainly the safest, is for the operator to keep one hand on the pump handle at all times while operating the controls with the other hand.

11. End Point Trial

11.1 Simultaneously with the third click, turn off the switch or release the push button. One second after the third click, raise the tilt cam handle to square the mold. Two seconds after the third click, pump the metering pump one full stroke. ~~As soon as the mold stops gyrating, reverse the tilt mechanism to square the mold, and immediately follow with one full stroke of the metering pump.~~ Squaring the mold and the test pump stroke must be two smooth, complete, ~~and consecutive~~ motions. Observe the low-pressure gage during the one full stroke of the metering pump; this is important because it checks for the end point of gyratory-shear compaction.

11.2 If the low-pressure gage does not surge to

~~reach~~ end point stress (5.1.3.2), adjust the pressure to pregyration stress (5.1.3.1), and repeat the procedure in Section 10. During molding when the gage comes to rest between pregyration stress and end point stress, drop the pressure to about 10 psi below pregyration stress and pump back up to it at a moderate speed:

11.2.1 *Example*—Suppose the pregyration stress is 345 kPa (50 psi) on the low-pressure gage and the end point stress is 1034 kPa (150 psi). If the mold is squared and the test pump stroked once, three types of conditions are possible:

11.2.1.1 The low-pressure gage goes to 414 kPa (60 psi) and drops to 310 kPa (45 psi); pump to 345 kPa (50 psi) and repeat the procedure in Section 10.

11.2.1.2 The low-pressure gage reaches 965 kPa (140 psi) and drops to 793 kPa (115 psi); release the pressure to approximately 276 kPa (40 psi), pump to 345 kPa (50 psi), and repeat the procedure in Section 10.

11.2.1.3 The low-pressure gage surges to ~~reaches~~ 1048 kPa (152 psi) and drops, which indicates that compaction is completed in accordance with 12.1; proceed as described in 12.2 through 12.6.

12. Completion of Test

12.1.1 For Hveem samples, the gyratory-shear compaction and the end point trial are repeated alternately until one nonviolent smooth stroke of the metering pump causes the gage to surge to end point stress (5.1.3.2) or higher, thus indicating completion of the gyratory-shear portion.

12.1.2 For Lottman samples, the gyratory shear compaction and the end point trial are repeated alternately until the sample height approaches the target height as determined by a height measuring device. Every attempt shall be made to adjust the number of gyrations so that the consolidation stress required to achieve the target height will be approximately 1000 ± 500 psi.

12.2 ~~Pump slowly until the automatic gage protector valve cuts the low-pressure gage out of the system. Then,~~ At approximately one stroke per second of the metering pump, pump the pressure up to consolidation stress (5.1.4.1), as measured by the high-pressure gage.

12.3 As soon as the gage registers consolidation stress, stop pumping ~~with the one hand, and with the other~~. Very carefully bleed-off the pressure, watching the descent of the high-pressure gage when releasing stress so as to prevent damage to the gage.

12.4 Pump the ram up and out of the mold. Slide the mold out of the press, remembering to place a gloved hand beneath the mold to keep the base plate from falling out. Remove the specimen from the mold by placing the assembly on the extrusion pedestal and pressing down using both hands. Care must be taken to hold the mold level with the table as the samples are extruded to keep the sample sides square. ~~and, with the aid of a converted arbor press or some similar device, force the mold off the specimen. (Other methods of specimen extrusion that do not damage the specimen may be used.)~~

12.5 Using the measuring device from Section 5.9, measure and record the height of ~~the~~ Hveem specimens to ensure a height of 53.3 ± 2.3 mm (2.10 ± 0.10 in.) and to allow for interpolation of stabilometer results in Figure 2 of CP-L 5106. ~~for conformity to the specified test method (see 7.2), and log it in if satisfactory.~~

12.6 If necessary, clean the mold on the inside with a kerosine rag before molding another specimen.

12.7 If there is a delay in compaction for more than 1 minute, the mold shall be stored in an oven having the temperature specified in 9.4. Delays of less than 1 minute do not require additional heating of the mold.

NOTE 3 ~~2~~--It should be emphasized that this motorized press must be kept clean. If dirt and grit collect on the platen, ram face, or hardened steel ring, wipe it off and re-oil before molding the next specimen. Attention must be given to cleanliness during and after molding.

NOTE 4 ~~3~~--When all the molding is completed, disconnect the press from the electrical outlet, clean the unpainted parts of the press, platen, ram face, mold, and base plate with a lightly moistened kerosine rag, and coat with a thin coat of light-weight oil. Wipe the painted parts of the press with a clean, dry rag. This cleaning and oiling is necessary if the press is to function properly ~~and deliver a long useful life~~.

TABLE 2 ~~1~~ Dimensions of Figs. 2 and 3

	mm	Tolerance		in.	Tolerance
A	100.00	+0.00	or	4.000	+0.000
		-0 05			-0.002
B	2.54	+0.00		0.100	+0.000
		-0.25			-0.010
C	1.57	+0.25		0.062	+0.010
D	25.40	+0.38		1.000	+0.015
E	14.27	+0.38		0.562	+0.015
F	100.25	+0.05	or	4.010	+0.002
G	100.00	+0.00	or	4.000	+0.000
		-0.13			-0.005
H	1.57	+0.13		0.062	+0.005
	3.18	+0.25		0.125	+0.010

Figures not to scale

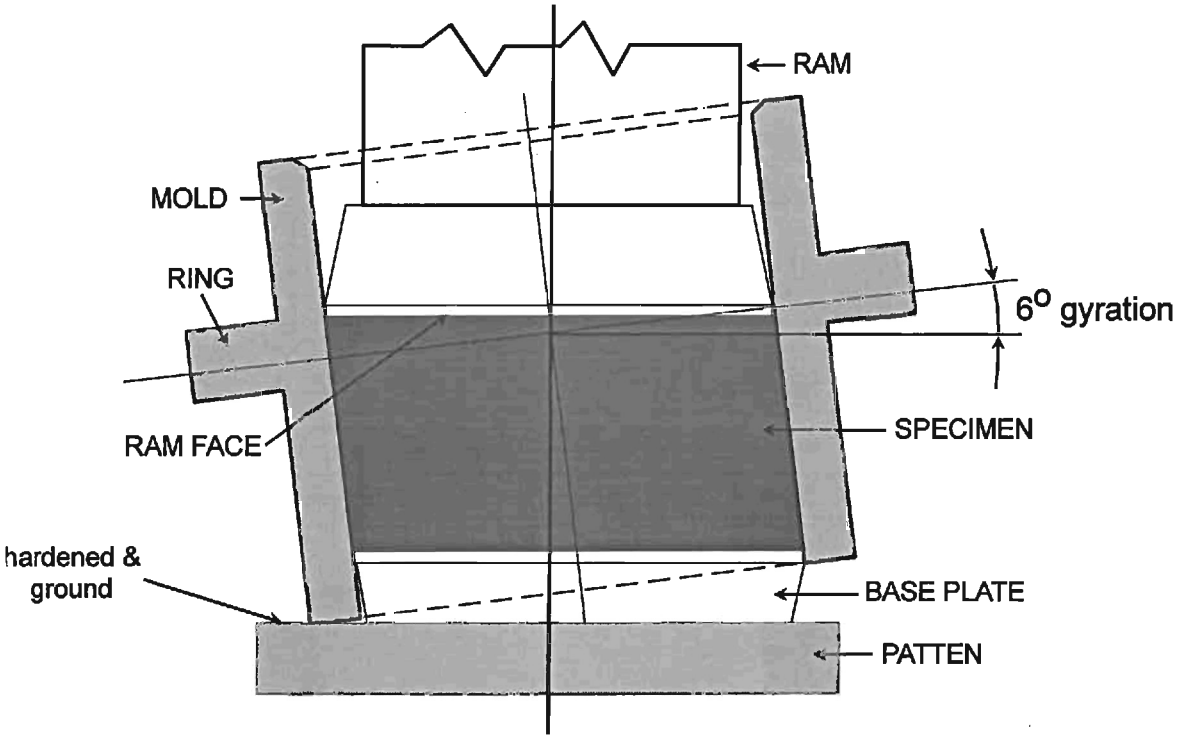

FIG. 1 Mold Assembly

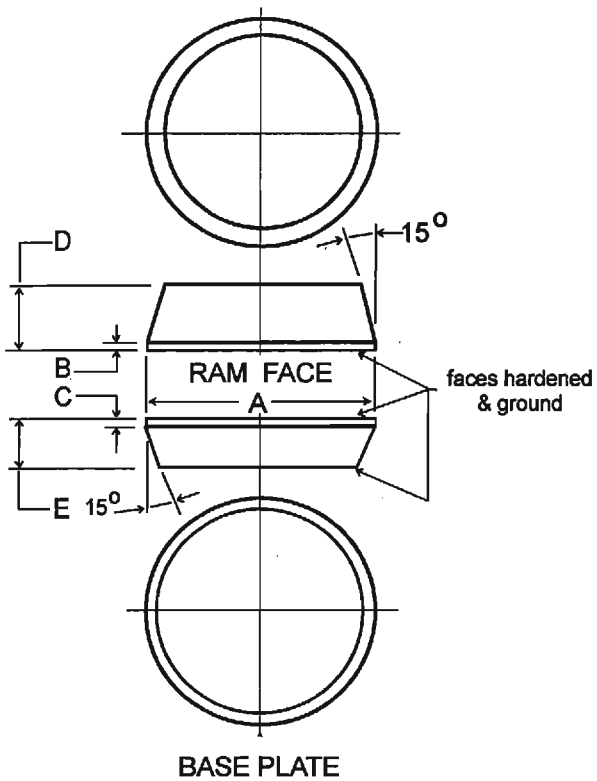

FIG. 2 Ram Face and Base Plate

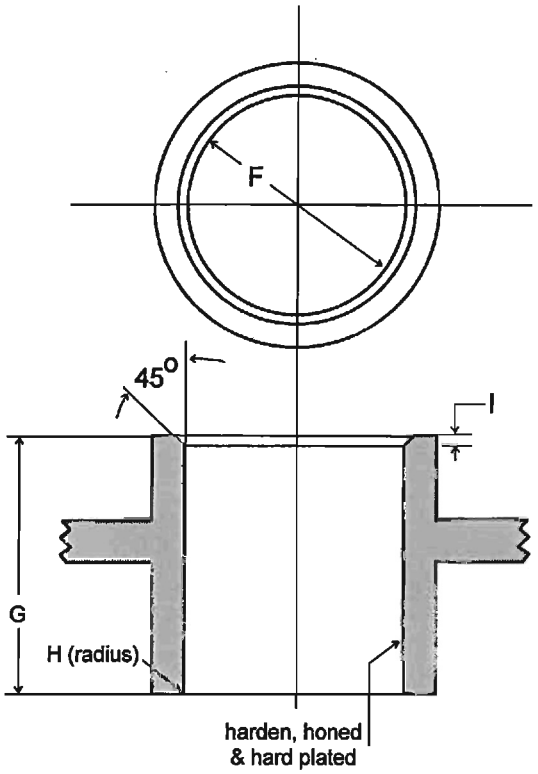

FIG. 3 Mold