DOT/FAA/CT-94/23

FAA Technical Center
Atlantic City International Airport,
N.J. 08405

Development of an Automated Nondestructive Inspection (ANDI) System for Commercial Aircraft: Phase I

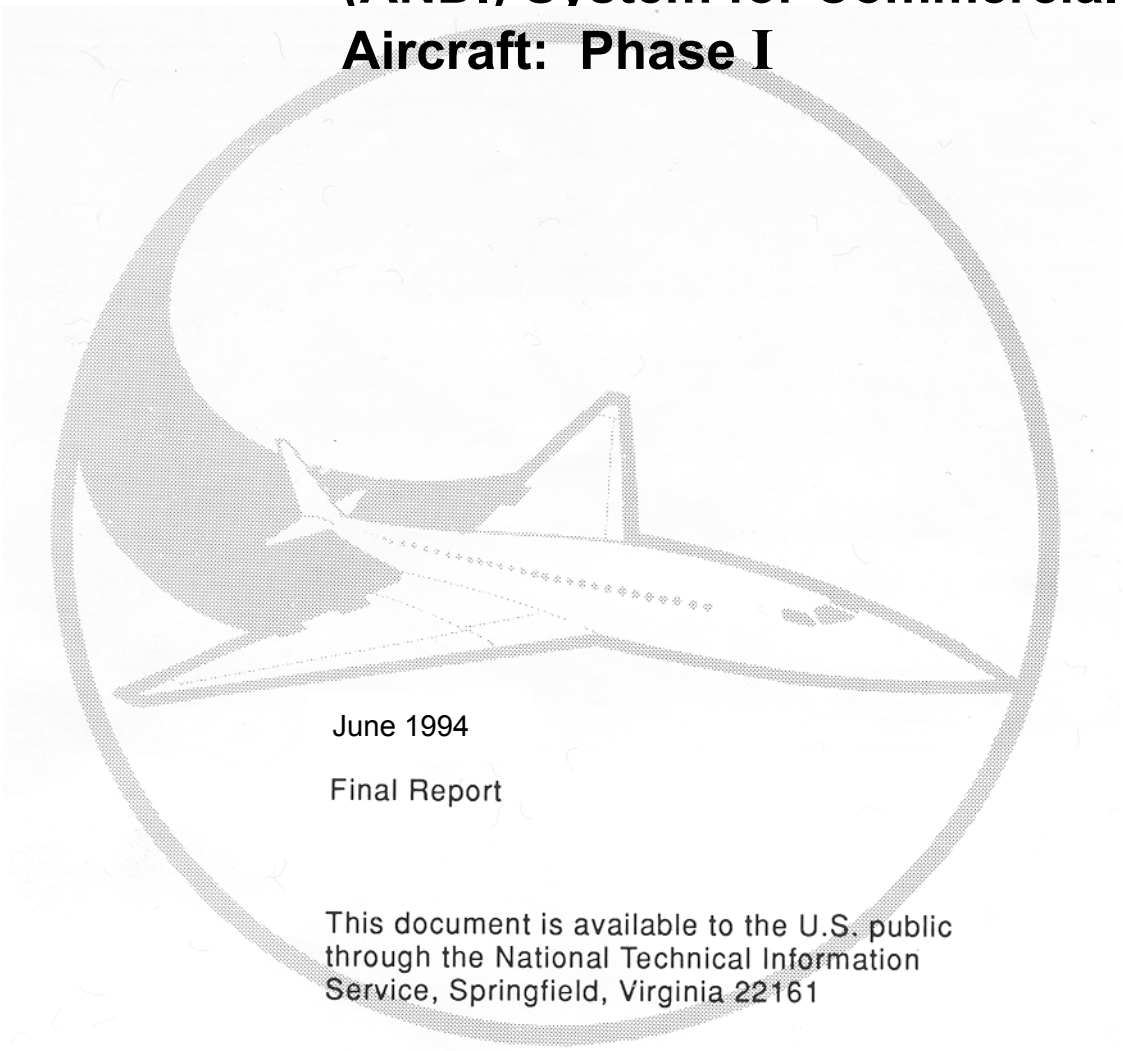

June 1994

Final Report

This document is available to the U.S. public through the National Technical Information Service, Springfield, Virginia 22161

U.S. Department of Transportation
Federal Aviation Administration

NOTICE

This document is disseminated under the sponsorship of the U.S. Department of Transportation in the interest of information exchange. The United States Government assumes no liability for the contents or use thereof.

The United States Government does not endorse products or manufacturers. Trade or manufacturers' names appear herein solely because they are considered essential to the objective of this report.

Technical Report Documentation Page

1. Report No.	2. Government Accession No.	3. Recipient's Catalog No.
DOT/FAA/CT-94/23		

4. Title and Subtitle	5. Report Date
Development of an Automated Nondestructive Inspection (ANDI) System for Commercial Aircraft: Phase I	June 1994
	6. Performing Organization Code Carnegie Mellon Research Institute
7. Author(s) C.J. Alberts, W.M. Kaufamn, and M.W. Siegel	8. Performing Organization Report No.
9. Performing Organization Name and Address Carnegie Mellon Research Institute A Division of Carnegie Mellon University 4400 Fifth Avenue Pittsburgh, PA 15213	10. Work Unit No. (TRAIS)
	11. Contract or Grant No. Bureau of Mines Grant No. G0319014
12. Sponsoring Agency Name and Address U.S. Department of Transportation Federal Aviation Administration Technical Center Atlantic City International Airport, NJ 08405	13. Type of Report and Period Covered Final Report, May 15, 1992 - January 31, 1993.
	14. Sponsoring Agency Code

15. Supplementary Notes

16. Abstract

This report describes the first phase in the development of a robotic system designed to assist aircraft inspectors by remotely deploying nondestructive inspection (NDI) sensors and acquiring, processing, and storing inspection data.

To demonstrate the feasibility of using robots to acquire data, a prototype inspection system was developed. The system comprises a surface-walking robot for sensor deployment and a personal computer for controlling the robot and for processing and displaying the acquired data. The robot can deploy an eddy current sensor on the skin surface, scan a portion of a rivet row, and step to another location to gather more data. In addition, requirements to include video cameras to provide visual images of the surface were specified.

The prototype system was tested in a laboratory setting on a simulated aircraft panel. The design of the robot satisfied the mobility and manipulation requirements of the skin inspection application. The eddy current traces displayed on the computer monitor from the robotically deployed eddy current sensors were comparable to those from manually deployed eddy current sensors. Overall, the results of this phase of work indicate that robotic inspection tools designed to assist human inspectors hold great promise.

17. Key Words	18. Distribution Statement
Robotics, NDI, Eddy Current, Data Management, Sensor Deployment, Navigation, Path Planning, Robot Control, Sensor Calibration, Inspection Robot, ANDI	This document is available to the public through the National Technical Information Service, Springfield, Virginia 22161.

19. Security Classif. (of this report)	20. Security Classif. (of this page)	21. No. of Pages	22. Price
Unclassified	Unclassified	51	

Form DOT F1700.7 (8-72) Reproduction of completed page authorized

TABLE OF CONTENTS

	Page
EXECUTIVE SUMMARY	vii
INTRODUCTION	1
Background	1
Objectives	3
RESULTS AND DISCUSSION	6
System Implementation	6
Mechanical System Design	9
Sensors	28
Calibration	31
Control System Design	34
Data Management	39
System Performance	41
CONCLUSIONS	42
REFERENCES	43

LIST OF ILLUSTRATIONS

Figure		Page
1.	Prototype Robotic System	7
2.	Lab Set-Up	9
3.	Drawing of the Cruciform Robot	11
4.	Robot Dimensions (Overhead View)	12
5.	Robot Dimensions (Side View)	12
6.	Reference Directions	13
7.	Drawing of the Stabilizer Bridge	14
8.	Stabilizer Bridge Motions	15
9.	Pivot Lock Schematic (Unlocked)	15
10.	Pivot Lock Schematic (Locked)	16
11.	Drawing of the Sensor Bridge	16
12.	Drawing of the Spine Assembly	17
13.	Photograph of the Robot	18
14.	Eddy Current Sensor Deployed By Robot	18
15.	Unaligned Robot (Overhead View)	19
16.	Unaligned Robot (Side View)	20
17.	Step 1 of Alignment Process	20
18.	Step 2 of Alignment Process	21
19.	Aligned Robot (Overhead View)	21
20.	Robot Steering	22
21.	Direction of Scanning Motion	22
22.	Robot's Position After Scanning Motion	23
23.	Initial Configuration for Walking	23
24.	Walking Motion: Spine Assembly Raised	23
25.	Walking Motion: Spine Assembly Motion	24
26.	Walking Motion: Spine Assembly Lowered	24
27.	Walking Motion: Stabilizer Bridge Moved Into Position	24

28. Robot Tethered to Bottom of Aircraft 26
29. Tether Limitation 26
30. Special-Case Tether 27
31. Reflectance Eddy Current Sensor 29
32. Camera Placement 30
33. Calibration Standard (Front) 31
34. Calibration Standard (Back) 32
35. Eddy Current Instrument Display for Subsurface Crack 32
36. Eddy Current Instrument Display for Surface Crack 33
37. Robot States 34
38. Robot Initial State (Side View) 36
39. Robot Initial State (Overhead View) 36
40. Operator Interface 37
41. Alarm Region on an Impedance-Plane Display 40

EXECUTIVE SUMMARY

Carnegie Mellon University (CMU) is conducting a research program for the Federal Aviation Administration's (FAA) National Aging Aircraft Research Program to develop robotic tools to assist aircraft inspectors by automating the collection, archiving, and post-processing of inspection data. The results of this program will establish the feasibility of using large-scale robotic nondestructive inspection (NDI) systems in major aircraft maintenance facilities. This program has been funded through Bureau of Mines Grant No. G0319014 by the FAA Technical Center. USAir, a major commercial airline, is supporting the project by providing technical guidance from experienced aircraft inspectors and access to aircraft in its Pittsburgh, PA, maintenance facilities.

During a preliminary phase of work under this program, CMU studied the task of aircraft inspection, compiled the functional requirements for an automated system to inspect skin fastener rows, and developed a conceptual design of an inspection robot. The purpose of this robotic system was to automatically deploy conventional FAA-approved sensors commonly used by aircraft inspectors. The system was designed to be sufficiently flexible to allow for the incorporation of new sensor technologies, such as those being developed by other organizations participating in the FAA's National Aging Aircraft Research Program.

This interim report describes the design and development of a prototype robot capable of walking on an aircraft fuselage and inspecting the skin for cracks and corrosion using an eddy current probe.

The major accomplishments of this phase of the project are:

- An inspection robot consistent with the design proposed in the first phase of work has been fabricated.
- The robot is able to adhere to surfaces in various orientations (e.g., vertical and inverted surfaces).
- The robot is capable of scanning a portion of a rivet line using an eddy current sliding probe.
- The system can simultaneously search for surface and subsurface flaws.
- A method of probe calibration comparable to that used in the calibration of manually deployed eddy current sensors has been developed.
- The robot can walk along the surface of an aircraft panel under commands issued by the inspector via a computer.
- The robot can scan faster than a human inspector.

This report provides details of the electro-mechanical design of the inspection robot and the design of the electronic controls. Initial operating tests are also described.

In its current state, the robot can be remotely operated by an inspector. The built-in alarm features of the commercial eddy current instrument being deployed can be used as an aid in identifying abnormal eddy current signals.

The next phase of work will include the enhancement of the electromechanical device and the development of sensing and path planning capabilities, automated signal interpretation for alarm generation, a marking apparatus for indicating the locations of suspected flaws, and an architecture for data management. With these additions, the system will be capable of providing the benefits anticipated from automated inspection of aircraft.

INTRODUCTION

Carnegie Mellon University (CMU) is conducting a research program under Bureau of Mines Grant No. G0319014 for the Federal Aviation Administration's (FAA) National Aging Aircraft Research Program aimed at developing automated robotic inspection systems to facilitate the inspection of commercial aircraft. This project is a joint effort of the Carnegie Mellon Research Institute and the Robotics Institute of Carnegie Mellon University. USAir, a major commercial airline, is also providing technical support and access to its Pittsburgh aircraft maintenance facilities.

The long-term objective of this project is to develop an inspector's assistant comprising automated robotic data acquisition, operator visual and graphical interfaces, and integrated data management. The system, called the Automated Nondestructive Inspector (ANDI), will alert inspectors as perceived abnormalities are encountered; the inspectors will interpret the data and choose what action, if any, to take. The development of ANDI will demonstrate the feasibility of using robotic systems at the airlines' major inspection and repair facilities.

The benefits anticipated to be derived from the successful completion of this program are:

- Improved Detection - The automated inspection system will consistently maintain a high probability of detection from start to finish.
- Improved Repeatability - The robotic system will perform the inspection in the same way every time.
- Reduced Aircraft Downtime - The automated system will help an inspector accomplish more inspections per shift.
- Electronically Retrievable Inspection Data - The system will keep a continuing record of the development of structural flaws for post-processing and analysis.
- Increased Inspection Intervals - Improved detection combined with the collection, archiving, and post-processing of inspection data will translate into greater confidence in the structural integrity of the aircraft; this will decrease the frequency of aircraft inspections.
- Improved Safety for Inspectors - The use of robots to inspect hazardous areas will reduce risks to the health and safety of inspectors.

BACKGROUND.

The task of aircraft skin inspection was selected as the first application to be automated because the airline industry indicated a preference for automation of this function. During this inspection task, the aluminum skin around the fasteners that attach the skin to the aircraft frame is examined for cracks. The skin is also examined for corrosion that may have developed during the years that the aircraft has been in use. These are highly repetitive tasks that lead to a reduced probability of detection of defects by inspectors due to inspector fatigue or boredom.

Manual inspection techniques do not incorporate extensive data acquisition and archiving. Currently, inspection results are recorded on paper, and, therefore, inspectors do not have easy access to previous inspection results. This information, if stored in an electronic database, could be accessed easily and used to identify problem areas on an aircraft or on a specific class of aircraft.

The emphasis of CMU's development effort is to provide inspectors with tools designed to help them do their jobs more efficiently; inspection tasks will be divided between the automated inspection system and the human inspectors. The automated system will deploy the sensors in a consistent manner and process sensor signals for any abnormal indications while the inspectors will monitor the system and will be required to make final judgments on unusual sensor readings. The inspector monitoring the system will be required to investigate any areas on the aircraft that produced the abnormal readings; the inspector's responsibility is to decide if a flaw exists at that location. Thus, the robot will deploy the sensors while the inspector will interpret the meanings of the data.

Work on the development of an automated inspection system for aircraft skin inspection was initiated in May, 1991. The initial work comprised reviewing airline inspection procedures and state-of-the-art robotics technology and creating a conceptual design of an automated inspection system. This was completed in December, 1991. The basic design of the robot consisted of the following elements [I]:

- Mechanical System - The mechanical device was envisioned as a cruciform robot that would adhere to the aircraft fuselage using suction cups. An umbilical comprising air, electrical power, and electronic control lines would run to the robot from the control area. Air passing through aspirating ejectors would create the vacuum for the suction cups. The robot would possess the ability to deploy a suite of sensors, and it would physically mark the locations where abnormalities are encountered.

- Control System - Based on the map of a specific aircraft contained in the database and the inspection to be performed, the control software would generate a path for the robot to follow. The path would be generated to avoid all known obstacles on the surface of the aircraft. Sensors would search for the skin seams on the aircraft to establish the location of the robot; the seams and seam intersections would be used as benchmarks to identify the robot's position on the fuselage surface. Between such benchmarks, dead reckoning would be used to guide the robot. The software would also control the two basic motions of the robot: scanning and walking. [A scan is defined as the condition in which the robot deploys the eddy current sensor over a fastener line and moves the sensor along the line, taking readings as it moves. The term "walk" indicates the condition in which the robot physically moves from one location on an aircraft to another.]

- Data Management System - Information on the types and locations of flaws would be stored in a database. The database would contain a map of the surface of each type of aircraft. Each specific aircraft would have a record of flaws that would describe the locations of repairs and flaws; a map and the record of flaws would give all of the information for a specific aircraft. Locations yielding sensor signal abnormalities that have not reached their respective thresholds for cracks or corrosion would be noted as well. Inspectors could use this information to track the evolution of the growth of a crack or corrosion. Statistical analyses would be performed on the data to note trends for a specific aircraft, a class of aircraft, or for an operator's fleet. The database would also be used by the control system for path planning for the robot; based on the inspection being performed and the map of the aircraft, the system would generate the path that the robot must follow. Signal processing software would be provided to analyze the data acquired by the on-board sensors. Image processing software would be developed to process images from the video cameras. Any data concerning flaws would be stored in the appropriate format as part of the database's record of flaws.

- Sensors - The robot would deploy eddy current sensors on the skin to test for surface and subsurface cracks and/or corrosion which may have begun to form. Contact sensors would sense any obstacles directly in the path of the robot. Proximity sensors would also be used to sense for obstacles in the robot's path. In addition, small on-board cameras focusing on the fuselage surface would provide the inspector with images of the skin. At least two cameras would be used, one focusing at short distances to allow inspectors to view the fasteners and a second focusing at long distances to allow inspectors to look at large areas of the fuselage.

- Human-Machine Interface - This would comprise the following elements: video monitors, teleoperation controls, and a workstation with graphics capabilities. The video monitors would provide operators with the visual images from the on-board cameras. The teleoperation controls would allow the users to manually control the motion of the robot from the operator's console for those cases when manual control is necessary. The workstation would be capable of providing complete process information to the users. Before an inspection would be performed, the monitoring system would generate the robot's path, and the users would be given the opportunity to edit the path as appropriate. Automatically generated path plans would be presented as graphics (perhaps overlaid on video); alternative plans could be presented for selection by the operator. During the inspection, the workstation would provide graphical images of the robot's position and orientation to the users. The operators would also use the workstation to graphically view the locations of suspected defects on the aircraft. All relevant inspection data would be accessed via the workstation. In addition, all control functions for the robot would be run by the users from the workstation environment.

OBJECTIVES.

The conceptual design described a very robust inspection system. The strategy employed by CMU was to approach the system development in phases; the product of each phase would be a system with a useful subset of the complete system's capabilities. In addition, each system would be upwardly compatible with subsequent systems. The following lists are intended to convey the basic goals of each phase of development as viewed following the completion of the conceptual design. As the development is in progress and more is learned, the goals may require modification.

Phase 1:

- Mechanical System - The first prototype of the robotic system will be developed and tested. The prototype will weigh approximately 30 pounds (14 kg), and it will be able to adhere to a surface and perform a scan.

- Control System - The development of the control software will be initiated in this development phase. The software will control the scanning motion of the mechanical device.

- Data Management System - The data acquisition and analysis functions used by the system during this phase will be those available in commercial eddy current systems.

- Sensors - The mechanical device will deploy operator-accepted eddy current sensors over a row of fasteners. In addition, experimentation with video cameras will begin, and a video specification document will be written.

- Human-Machine Interface - The system functions will be controlled by a PC workstation. A simple menu-driven interface will be provided for the operator. The output from the commercial eddy current system will be shown on the monitor.

At the conclusion of Phase 1, the system will possess several capabilities that are potentially beneficial to aircraft inspectors. The robot will perform a scan much faster than a human inspector; data will be acquired in a consistent manner resulting in a constant probability of detection; and the system will have the ability to record data electronically. The Phase 1 robotic system will be potentially operable by one inspector.

Phase 2:

- Mechanical System - The weight of the device will be reduced to approximately 15-20 pounds (7-9 kg). Modifications will be made to the design based on experience from Phase 1 development. A device to physically mark the locations of defects (e.g., using washable paint) and a tether system to secure the robot will be developed. In addition, structural enhancements to enable the device to walk along the fuselage surface will be made.

- Control System - Software development will continue with software enhancements being made to instruct the device to walk along the fuselage surface. The walking and scanning motions will be integrated with each other. Physical controls for the teleoperation of the system will be developed. Work directed towards integrating the sensor data to allow for more autonomous motion will begin.

- Data Management System - The development of signal processing software for the analysis of information from the eddy current sensors will be initiated. Software development for processing of the images from the on-board cameras will also be initiated. A prototype database to support the signal and image processing activities will be developed, and a specification for the long-term database requirements of the system will be written.

- Sensors - Miniature cameras will be added to the mechanical device. Other sensors will be tested, and appropriate sensors for collision avoidance and navigation will be added.

- Human-Machine Interface - Graphical capabilities will be added to the interface. Additional features will be developed based upon the experience gained from the testing of the Phase 1 human-machine interface.

At the conclusion of Phase 2, the capabilities of the system will have increased substantially. The robot will possess a degree of autonomous motion; it will have some ability to manage data; it will be able to physically mark the surface when abnormalities are encountered; and the weight of the robot will be reduced. The Phase 2 robotic system will be operable by one inspector.

Phase 3:

- Mechanical System - Modifications will be made to the design based on experience from Phase 2 development. Efforts to improve the performance and to reduce the weight of the device will continue.

- Control System - Path planning capabilities will be developed to enable the system to generate a path based on the map of the aircraft contained in the database. The navigation and sensor-integration capabilities initiated in Phase 2 will be enhanced.

- Data Management System - The signal and image processing capabilities will be further enhanced. The database to support the automated system will be developed according to the specifications from Phase 2. The statistical routines to support the trend analyses will be developed.

- Sensors - If experience shows that they are needed, additional or alternative sensors will be integrated with the system.

- Human-Machine Interface - The graphical capabilities of the interface will be further developed. The control interface will be increased hierarchically to permit the operator to enter high-level abstract instructions and have the computer plan the corresponding low-level specific actions.

At this point, the system will be fully functional. The robot will be autonomous once it has been placed on a fuselage; a database for post processing and statistical analysis of data will be

integrated with the system; the robot will be able to inspect faster than in previous phases; and it will be possible to incorporate other NDI sensors into the sensor suite. One inspector will be able to monitor the entire inspection operation.

Following the third phase of development, any necessary modifications will be made to the system. After all modifications have been made, the main goal will be to transfer the technology to industry. A more detailed plan to transfer this technology will be developed later in the system development cycle. The remainder of this report details the design and construction of the first prototype of ANDI which follows the goals outlined above for Phase 1.

RESULTS AND DISCUSSION

SYSTEM IMPLEMENTATION.

The main objective of Carnegie Mellon University's Automated Inspection of Aircraft Project is to demonstrate the feasibility of using a robot to remotely deploy nondestructive inspection (NDI) sensors on the skin of an aircraft. This is a complex problem that comprises many technical disciplines. To adequately address all of the technical issues involved, the choice was made to approach this objective in phases, as explained in the Introduction section of this document. The first phase of development has been completed. The general objective of this phase was to develop a lab prototype capable of both adhering to an aircraft panel and performing a multiple-sensor scan of a line of fasteners. The following are the specific system objectives used in the development of the first prototype of the automated aircraft inspection system:

- Mechanical Device - A robot will be designed to hold to the skin of an aircraft at all orientations (top, side, and underneath) in most locations. It will perform fine placement and movement of a sensor platform with respect to the site on the skin being inspected, and the sensor platform will translate along one axis.

  During the initial phase of development, this general purpose robot will not be required to inspect the high-curvature areas such as the nose of the aircraft. Also, the robot will not be required to move on the aircraft fuselage.

- Sensor Suite - At least three NDI sensors will be initially investigated for inclusion on the sensor platform. One will be a high frequency eddy current probe for surface crack detection radiating from fastener holes. The second will be a low frequency eddy current probe for both corrosion and subsurface crack detection, and the third will be a video camera for larger area examination.

- Calibration Routine - A method to ensure that the eddy current sensors of the automated inspection system are properly calibrated will be designed. The calibration method will make use of airline calibration standards if possible; custom calibration fixtures will be designed and fabricated if necessary. The calibration protocol will be simple and will assure repeatable data acquisition.

- Control Software - In anticipation of the mechanical device becoming mobile and capable of walking, software development will be initiated for the guidance and control of the device. This software will be enhanced and refined in future phases of the project.

- Data Management - An investigation into the data necessary for a data archiving system will be initiated. The data acquisition and analysis functions used by the system will be those available in commercial eddy current systems.

Figure 1 shows a diagram of the basic elements of the prototype robotic system implemented during this phase of development. Each of the elements is briefly described below:

- Eddy Current Sensor - A reflectance eddy current sensor (also known as a sliding probe) is used in the prototype system. This sensor is run simultaneously at two frequencies searching for both surface and subsurface defects; the electronics effectively makes this two independent sensors. The specific sensor used is the Nortec SPO-1958.

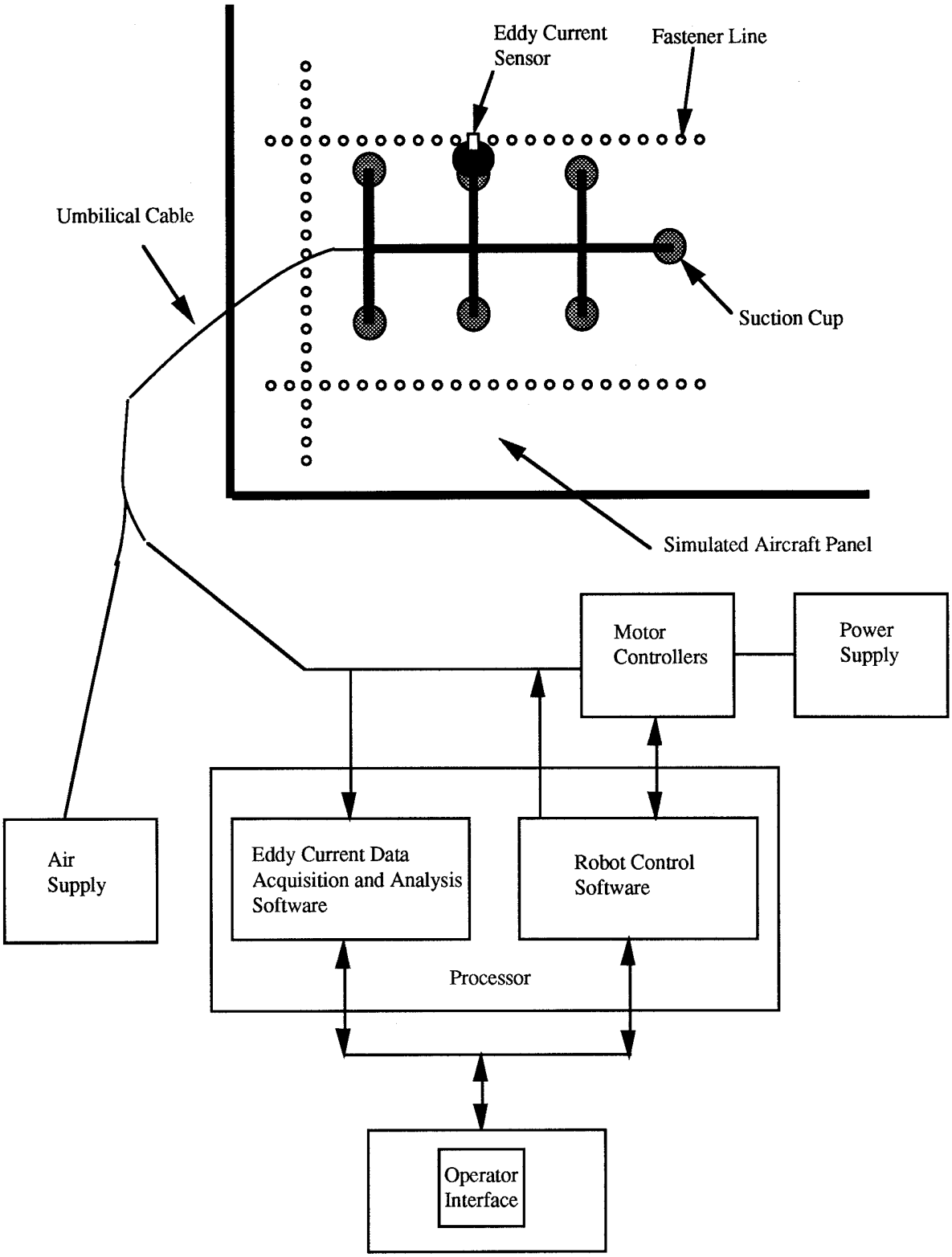

FIGURE 1. PROTOTYPE ROBOTIC SYSTEM

- Simulated Aircraft Panel - A simulated aircraft panel manufactured by Foster-Miller, Inc. was provided to the CMU Automated Inspection of Aircraft Project by Sandia National Laboratories. The panel's curvature and fastener layout are similar to that of a Boeing 737.
- Umbilical Cable - This consists of multiple lines running to the robot from the control area. The umbilical comprises air, electrical, control, and sensor lines. A tether to support the robot if the air supply fails is planned for the next phase of development.
- Air Supply - The system's source of air is an air tank; future versions of the system will make use of air compressors as an air source. Air is required, for the on-board pneumatic cylinders and for the creation of a vacuum by passing the air through on-board aspirating ejectors.
- Power Supply - DC, AC, and high-frequency electrical power is supplied to the on-board valves and to the linear and lead screw motors.
- Motor Controllers - RS-232 communication lines transmit command and status messages between the computer's serial ports and controllers for the linear motors and lead screw motors.
- Eddy Current Data Acquisition and Analysis Software - The eddy current data acquisition and analysis software used in this phase of the project is a commercial package, SmartEDDY™ 3.0, developed by SE Systems, Inc.
- Robot Control Software - The robot control software controls the walking and scanning motions of the robot.
- Processor - A PC using a 486 50 MHz processor running DOS 5.0 is used to run the robot control software and the eddy current data acquisition and analysis software.
- Operator Interface - The operator interface to the robotic system is displayed on a 14 inch VGA color monitor.

The above description gives a brief overview of the prototype aircraft robotic inspection system as it currently exists. The long-term architecture comprises additional elements such as a vision system, image and signal processing, and the design and implementation of a database of navigation landmarks and defects; these will be completed in future phases of development. The remainder of this section gives a general description of the results of this phase of development while the sections that follow explain the mechanical, sensor, and control systems in more detail and give a more extensive review of the system capabilities.

During the initial phase of development, the simulated aircraft panel was mounted horizontally in the lab; all testing on the panel during this phase was performed with the panel mounted in this position. Because the panel is a curved surface, the robot was tested on a modest slope during this phase. The lab set-up is shown in figure 2.

The robot was able to adhere to the skin of the horizontally-mounted aircraft panel. In addition, during the course of experiments conducted to determine if the robot could hold to vertical surfaces, the robot was successfully affixed to a wall.

Simultaneous high and low frequency scans were completed both on a calibration standard and on the simulated aircraft panel. Scans were completed by translating the sensor platform along one axis; the results of the eddy current scans were displayed on a PC screen. Flaws were identified by examining the traces produced on the screen. Also, experiments were conducted with a video camera to help determine the specifications necessary to include vision as a sensing means in future phases of the project. A video specification document was written outlining the recommended hardware and its placement on the robot. Prototype algorithms are being developed to enable machine identification of lap joints and rivets and to aggregate rivets into rivet lines.

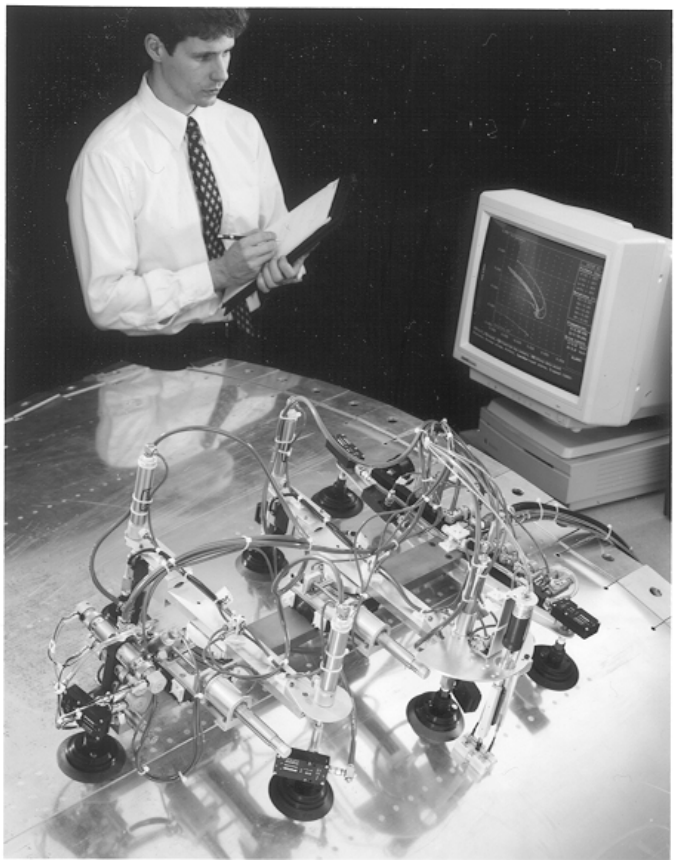

FIGURE 2. LAB SET-UP

A method to ensure that the eddy current sensors of the automated inspection system are properly calibrated was designed. To keep the automated inspection system consistent with airline procedures, the calibration standards used in today's manual inspection procedures were also used with the robotic inspection system. During calibration, the robot deployed the eddy current sensor and scanned the two rows of fasteners on the standard. The parameters of the eddy current software were adjusted to obtain the standard calibration curves. In this way, the robotic system was calibrated simultaneously at both a high and a low frequency.

Software development was initiated for the guidance and control of the robot. The software was used to control the robot as it positioned and moved an eddy current sensor along a length of skin seam. The walking motion of the robot was also successfully tested using the control software.
By the end of the first development phase, the robot was able to scan a length of skin seam, take a step, and scan a second length of skin seam. This ability to scan and step was an additional system capability that went beyond the objectives of the grant for this phase of the project. The walking motion was not tested while the robot was affixed to a wall. This test was deferred until the next phase of work when a tether will be present to prevent damage in case of any mishaps.

MECHANICAL SYSTEM DESIGN.

During this development phase, the main objectives in the mechanical design of the robot were to ensure that the device would adhere to an aircraft at all orientations (top, side, and underneath) in most locations and that it would be able to properly position and move an eddy current sensor along a line of fasteners. The robot would not be required to move its position on the aircraft fuselage at this

point. (However, during this development phase, the robot was able to successfully walk, exceeding the stated objectives.)

During the conceptual design phase, three basic approaches were considered for the automation of aircraft skin inspection: an overhead robot, a ground-based robot, and a surface-walking robot. The overhead gantry-approach would consist of a permanent structure through which aircraft Would be towed for inspections; this is also called the "car wash" approach. This proved to be incompatible with airline maintenance procedures and infeasible from an economic point of view. The ground-based-robot approach would have a mobile platform that carries an arm and probe manipulator to areas of aircraft that need to be inspected. This type of robot would be difficult to incorporate into the crowded and cluttered hangar environments of commercial airlines. The third approach, the surface-walking robot, would consist of small mobile robots that would crawl over the fuselage surface. This is compatible with airline maintenance procedures and could easily be incorporated into the crowded hangar environments. These robots are also acceptable to human aircraft inspectors who view them as inspection tools rather than as competitors for their jobs. The design of the surface-walking robot created by members of the Carnegie Mellon team was driven by the application for which it was to be used.

A fuselage is generally a cylindrical surface with orthogonal rows of rivets. The rivets tend to run in two directions: circumferentially around the fuselage, which is called the "vertical" direction in this document, and approximately parallel to the horizontal axis of the aircraft from nose to tail, which is called the "horizontal" direction. An aircraft typically has more curvature and non- orthogonal rivet patterns at the nose and tail than at the main fuselage section; however, very few inspections are required to be performed at the nose and tail. One of the main goals of the Carnegie Mellon program is to develop useful inspection tools that have the potential to be commercialized quickly. Thus, the decision was made to design a tool that would perform most of the conventional inspections on the fuselage. At this time, developing a prototype to inspect areas requiring few inspections is not considered a goal of this program. If the FAA and industry decide in the future that a robot should inspect areas such as the nose and tail, the design would be modified or a special-purpose device would be designed and fabricated to inspect these areas. Inspection personnel from USAir and other airlines clearly indicated that the robot must be able to perform large-area inspections on the main fuselage sections of commercial aircraft. In addition, there are more inspections performed along the horizontal lines of fasteners than along the vertical lines of fasteners, and there are repair patches and other obstructions located at random locations on any given aircraft. From this information, a decision regarding the minimum requirements for the robot was reached. It would be required to move gracefully in the horizontal direction, to move adequately in the vertical direction, and to possess some steering capability. A cruciform robot with some degree of compliance between the axes would satisfy these walking requirements.

In addition, the weight of the robot must be kept to a minimum. Inspectors will be required to lift the robot when they affix it to the aircraft surface before initiating an inspection procedure and when they remove it from the surface after an inspection has been completed. The robot must be light enough to enable inspectors to lift it. The ultimate goal is to produce a robot that weighs between 15 and 20 pounds (7 and 9 kg) and can both walk on the aircraft surface and deploy sensors. However, for this phase of development, a heavier version of the robot was fabricated, and a strategy to reduce its weight was developed. This was done to reduce the time necessary to fabricate the first prototype of the robot and to allow system testing in the laboratory to begin sooner. Thus, for this phase of development, the goal was to produce a robot weighing approximately 30 pounds (14 kg).

Adding additional mechanical elements (e.g., a robotic arm) to deploy NDI sensors would add significantly to the weight of the device. Weight would be saved if the same elements used by the system to walk were also used by the system to deploy sensors; this approach was chosen for the robot design. Therefore, the walking and sensor deployment motions of the cruciform robot efficiently share the same mechanical elements, resulting in a lighter device.

To affix the robot to the fuselage, active suction cups are used. Small on-board vacuum pumps, one for each suction cup, generate the vacuum necessary to hold the robot to the fuselage surface. Thus, the cruciform robot was designed to adhere to surfaces in all orientations using suction cups as the active adhering means, to deploy sensors on a surface, and to walk across a curved surface. The robot design is shown in figure 3; pneumatic and electrical connections are not shown in this figure.

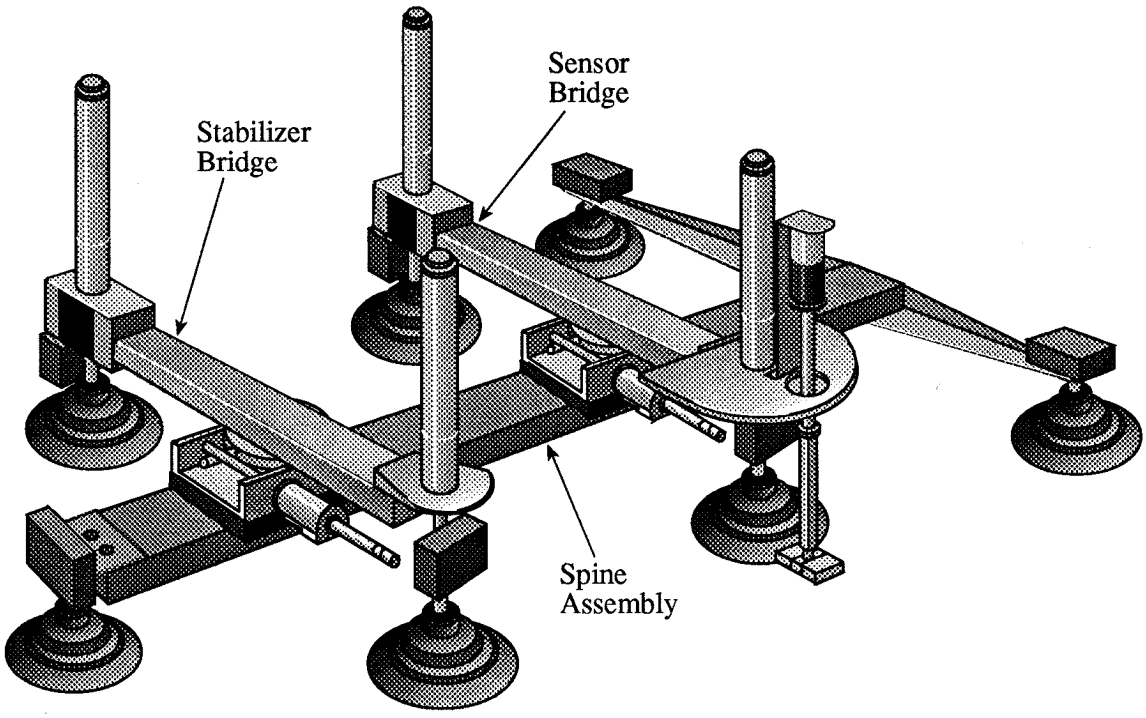

FIGURE 3. DRAWING OF THE CRUCIFORM ROBOT

The robot comprises a spine assembly and two bridges. The spine assembly is the main member upon which the bridges move. The sensor bridge possesses dual functionality: it is used to deploy the eddy current sensor during scanning and is also used for support during walking. The stabilizer bridge is used only for support during walking, although later it might have an inspection role. Each of these structures and the basic robot motions will be discussed in more detail below. The relevant dimensions of the robot are shown in figures 4 and 5, and figure 6 indicates the reference directions which will be used when describing the system components.

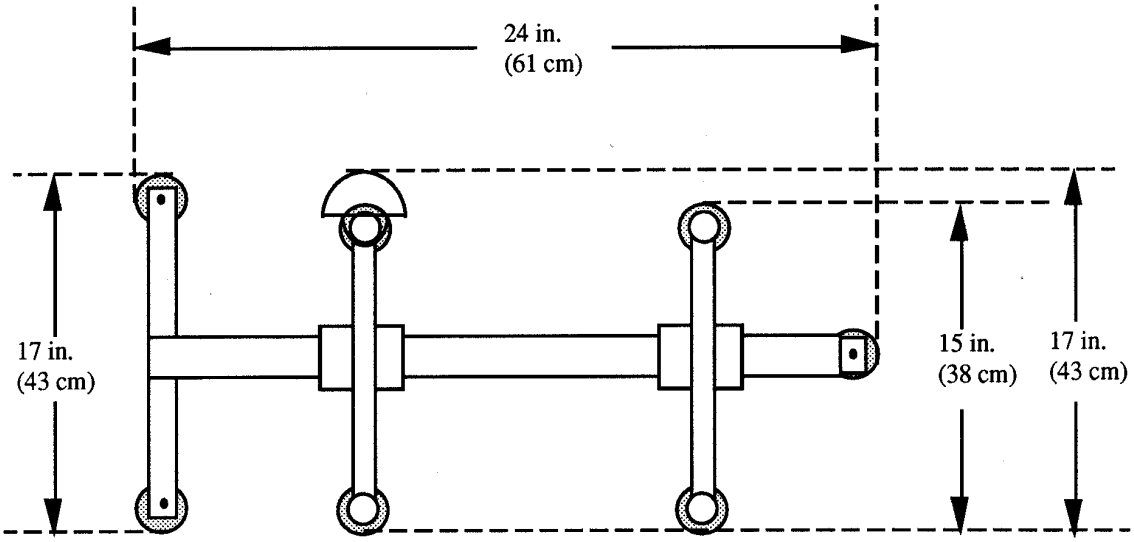

FIGURE 4. ROBOT DIMENSIONS (OVERHEAD VIEW)

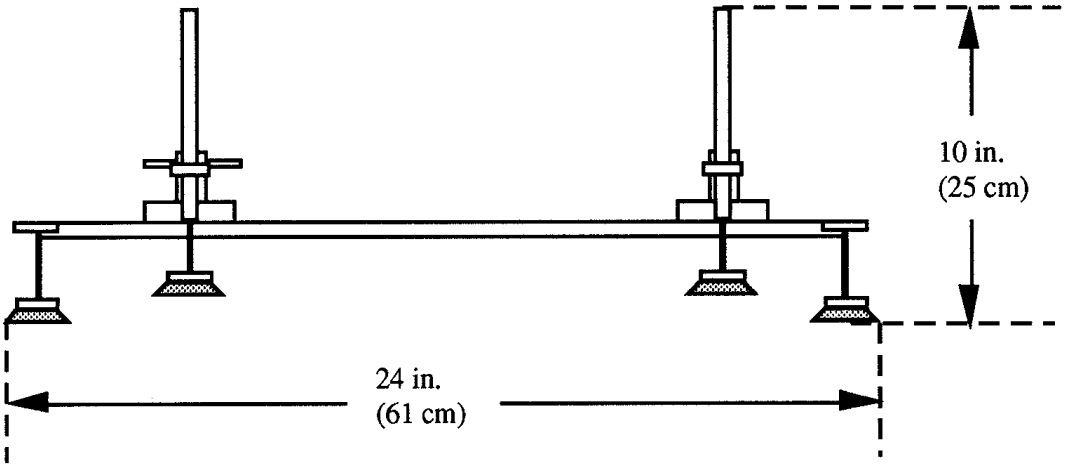

FIGURE 5. ROBOT DIMENSIONS (SIDE VIEW)

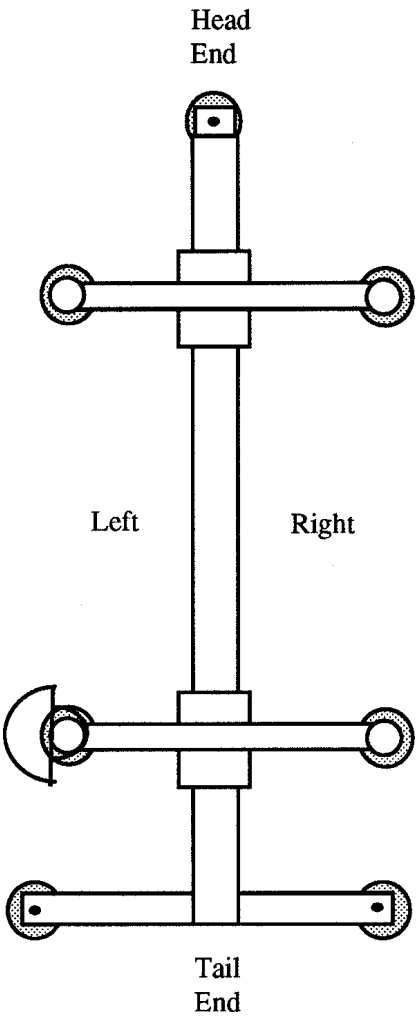

FIGURE 6. REFERENCE DIRECTIONS

The robot design is symmetrical, permitting many possible configurations; thus, a standard configuration for the robot was defined. The design team designated the following configuration as the standard:

- The sensor bridge is the bridge closest to the tail end of the spine assembly.
- The sensor platform is mounted on the sensor bridge so that it is positioned on the left side of the robot.
- The stabilizer bridge is the bridge closest to the head end of the spine assembly.

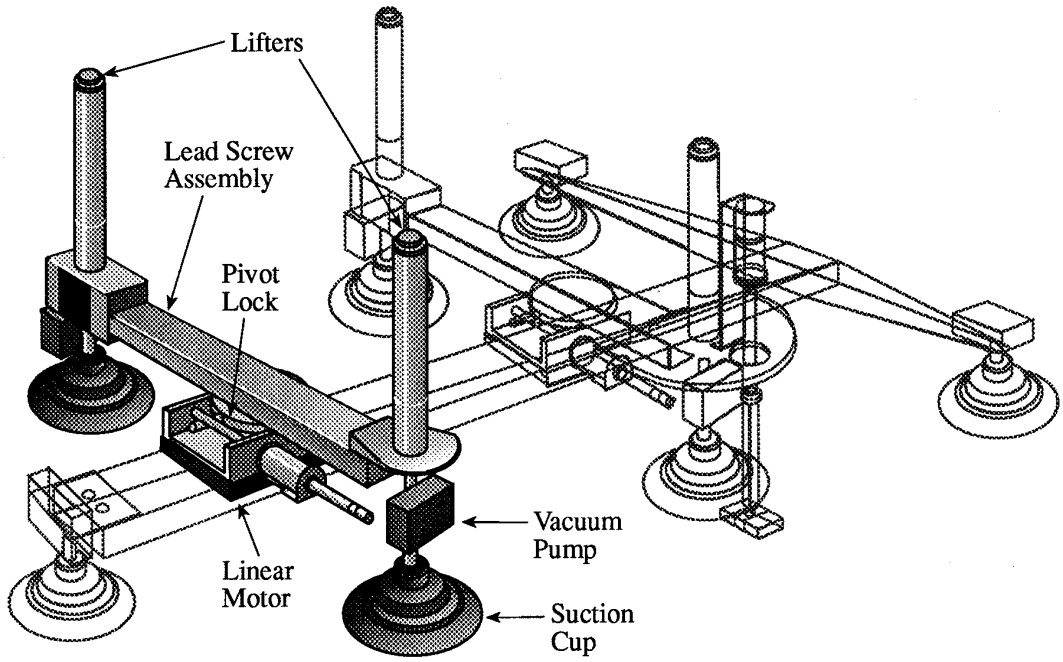

FIGURE 7. DRAWING OF THE STABILIZER BRIDGE

The stabilizer bridge, shown in figure 7, comprises the following elements:

- Linear Motor - The positioning accuracy of the linear motor is ±0.003 inches (± 0.076 mm), and the static force holding it to the platen (spine) is 180 pounds (801 N). It rides along the platen on an air cushion provided by an air bearing.
- Lead Screw Assembly - This assembly provides 6 inches (15 cm) of travel and is driven by a stepping motor.
- Lifters - These are double-acting pneumatic cylinders.
- Vacuum Pumps - Bernoulli-type vacuum pumps (one for each suction cup) generate the vacuum required to adhere to a surface. They require 1.12 cubic feet per minute (0. 53 1/sec.) of air at a pressure of 73 pounds per square inch (0.5 MPa) to produce a vacuum of 28.1 inches of mercury (714 mm Hg).
- Suction Cups - These are 3 inches (8 cm) in diameter and are made of silicone rubber. At a vacuum of 28 inches of mercury (711 mm Hg), the lifting power for each suction cup on a smooth and clean surface is 44.0 pounds (196 N) in the direction normal to the surface and 24.2 pounds (108 N) in shear.
- Pivot Lock - This is a floating pneumatic-type pivoting mechanism that allows ±20 degrees of motion about its reference (locked) position. It consists of an air bearing support and a single-acting cylinder with a spring return.

The stabilizer bridge can pivot with respect to the linear motor, can translate along the spine assembly, and can translate along its own axis. These motions are shown in figure 8.

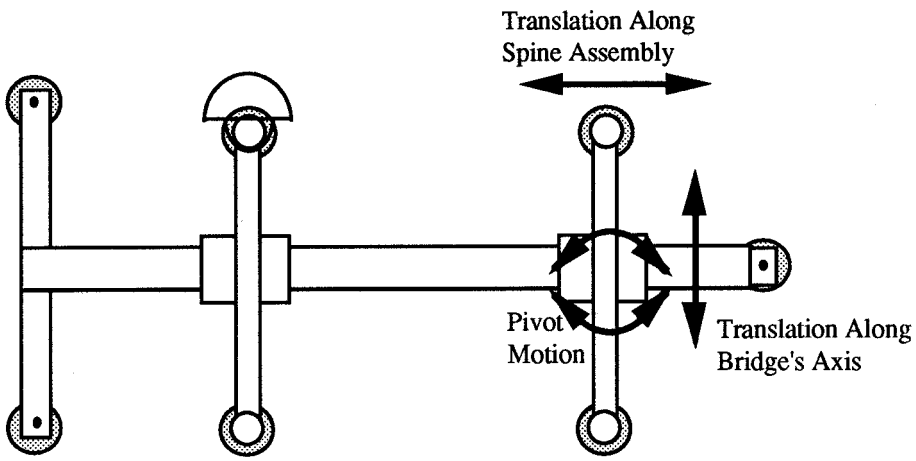

FIGURE 8. STABILIZER BRIDGE MOTIONS

The stabilizer bridge can travel a maximum distance of 15 inches (38 cm) along the spine assembly, and the stroke of the bridge's lead screw assembly is 6 inches (15 cm). The pivot locks give ±20 degrees of motion as shown in figure 9. The locking mechanism consists of a single- acting/spring-return cylinder floating in an air bearing. In the position shown in figure 9, the cylinder is in its extended position, allowing the lead screw assembly to pivot with respect to the linear motor. When the cylinder is retracted, as shown in figure 10, the clamps lock the pivot into position securing the lead screw assembly perpendicular to the spine. This is the position used for the scanning and walking motions; the pivots are unlocked only when using the alignment motion. The details of these motions are described later in this section.

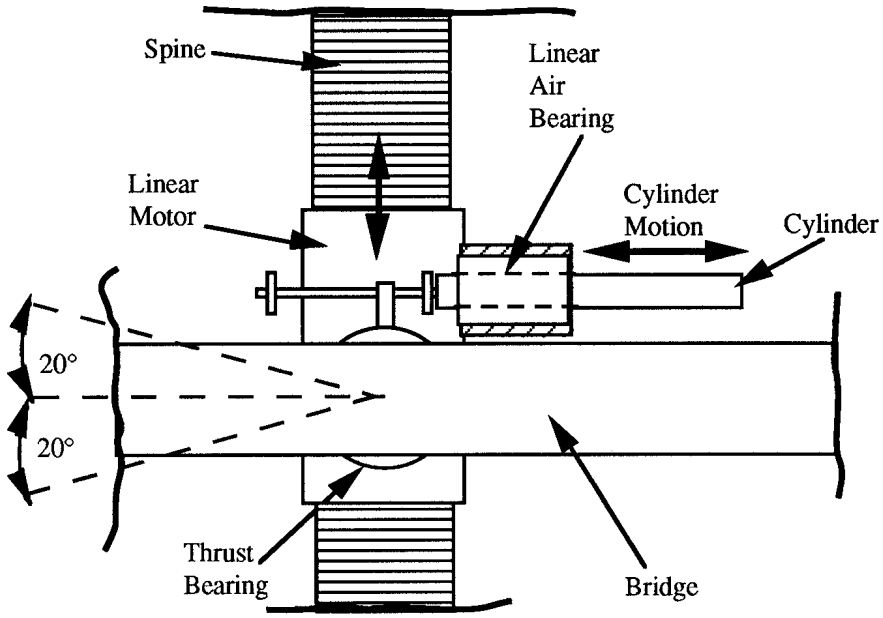

FIGURE 9. PIVOT LOCK SCHEMATIC (UNLOCKED)

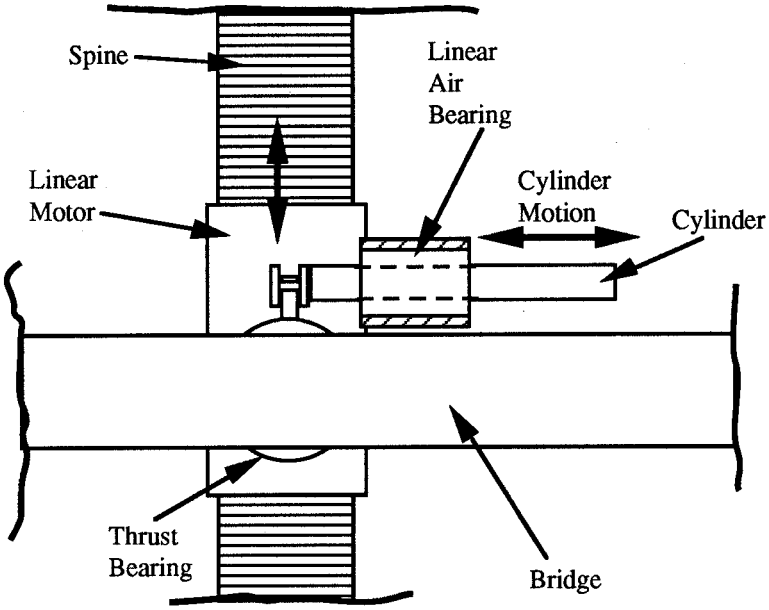

FIGURE 10. PIVOT LOCK SCHEMATIC (LOCKED)

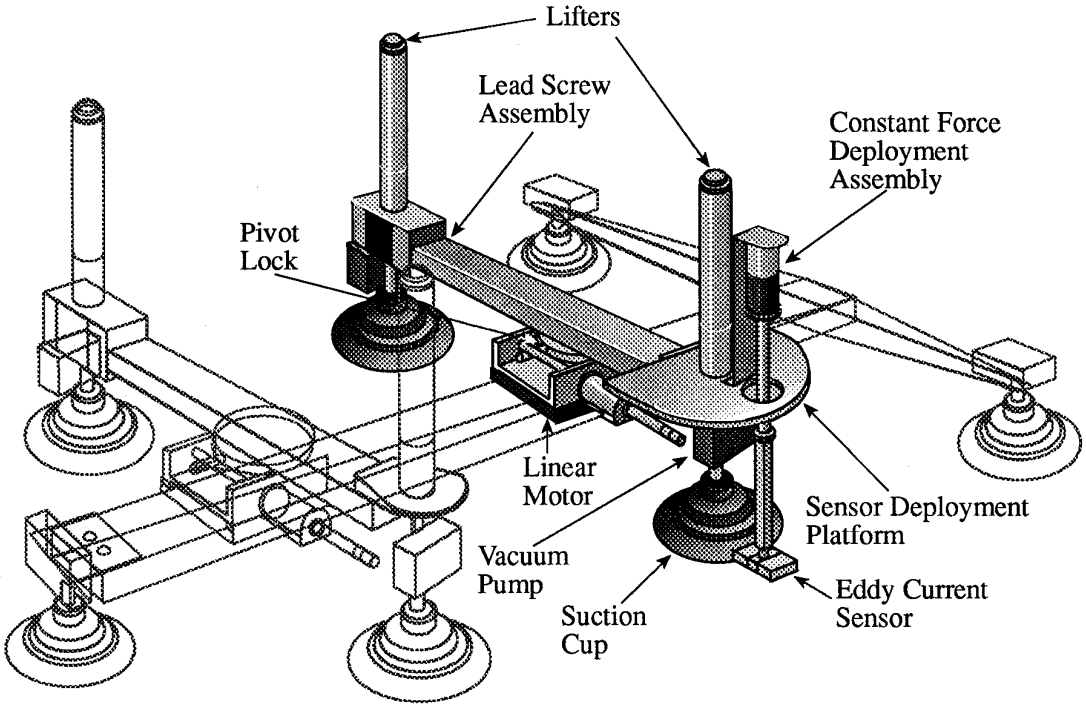

FIGURE 11. DRAWING OF THE SENSOR BRIDGE

The sensor bridge, shown in figure 11, is mechanically identical to the stabilizer bridge except that is contains the following additional items:

- Sensor Deployment Platform - A suite of sensors can be mounted on this platform. It can be indexed to deploy a specific sensor and locked into position. During this phase, one reflectance eddy current sensor is mounted on the platform.
- Eddy Current Sensor - A reflectance-type Nortec SPO-1958 eddy current sensor is mounted on the sensor platform.
- Constant Force Deployment Assembly - A precision actuator (air pot) is used to deploy the eddy current sensor on the fuselage surface and to retract it from the surface. This assembly applies a constant force during sensor deployment which can be set from 1-3 pounds (4-13 N).

Because the sensor bridge is mechanically identical to the stabilizer bridge, its motions are the same. It can translate along the spine assembly a maximum distance of 15 inches (38 cm), translate along its own axis a maximum distance of 6 inches (15 cm), and pivot with respect to the linear motor ± 20 degrees.

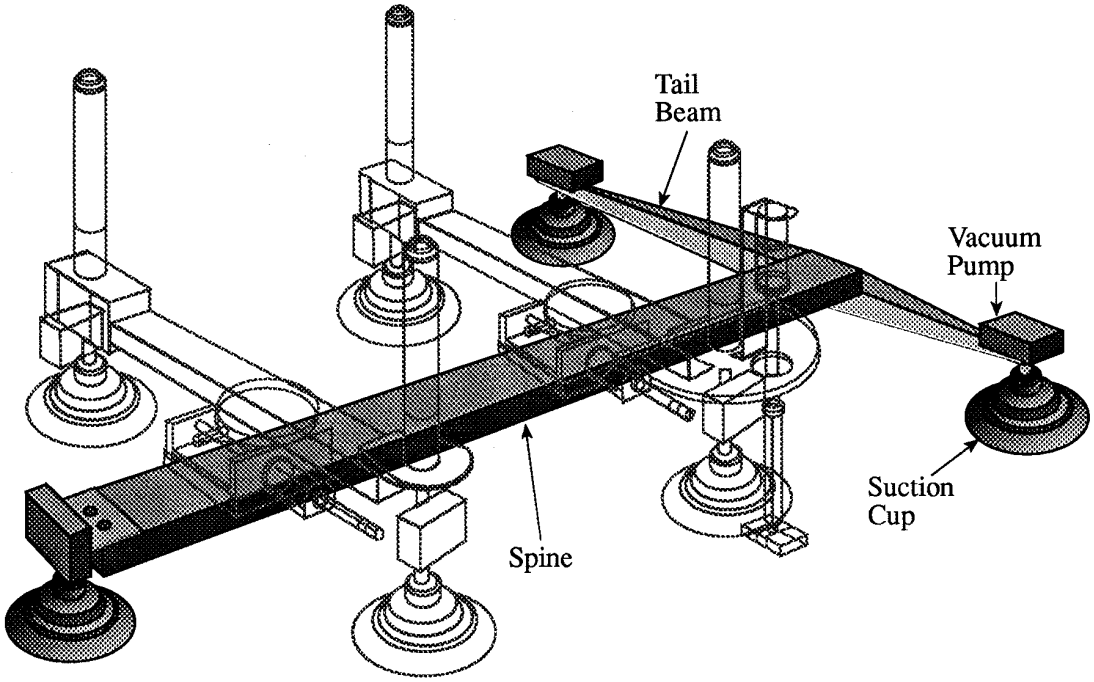

FIGURE 12. DRAWING OF THE SPINE ASSEMBLY

The spine assembly, shown in figure 12, consists of the following items:

- Spine - This is the platen upon which the linear motor travels.
- Tail Beam - This is a machined 606l-T6 aluminum T-section.
- Control Valves - These are three-way 24 volt direct current solenoids. The airflow through the valve is 0.5 cubic feet per minute (0.2 1/sec) at a pressure of 100 pounds per square inch (0.7 MPa).

The spine assembly can be thought of as the backbone of the robot. The bridges are mounted on the spine assembly and translate with respect to it during both scanning and walking. In addition, the control valves are mounted at the head and tail ends of the assembly. Current plans anticipate mounting three small video cameras on the spine assembly and a fourth on the sensor deployment platform; this is detailed in the Sensors section of this document.

Notably, all of the major parts used to fabricate the robot were standard off-the-shelf components; very few modifications were made to the parts. The reasons for using standard components were to shorten the fabrication process and to keep fabrication costs to a minimum. To complete the assembly, designing and fabricating custom bracketing was necessary; detailed designs of the custom bracketing are not provided in this report.

A photograph of the finished robot including the air and electrical supply lines is shown in figure 13. A close-up photograph of the robot deploying the eddy current sensor on the simulated aircraft panel is shown in figure 14.

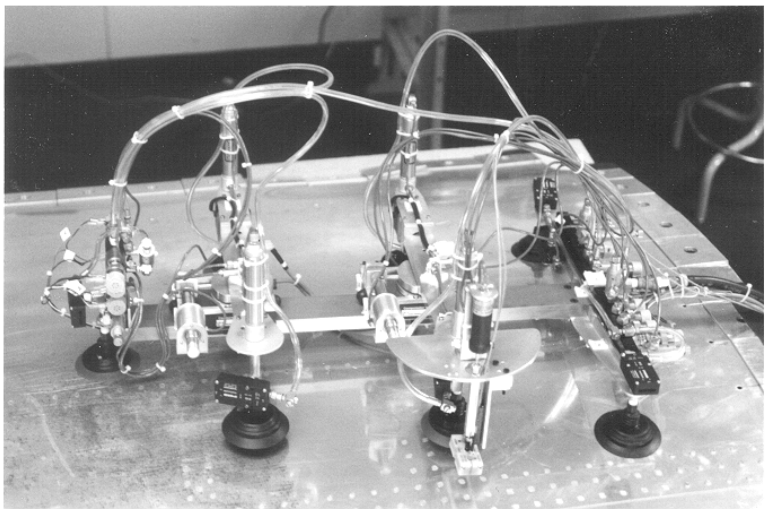

FIGURE 13. PHOTOGRAPH OF THE ROBOT

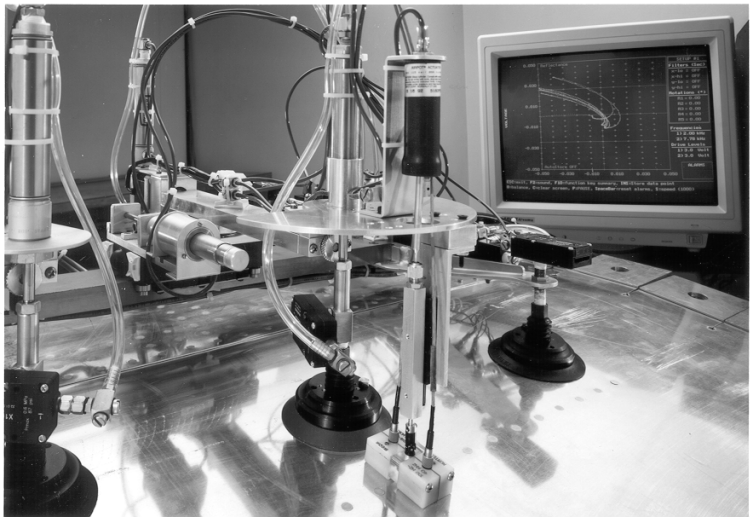

FIGURE 14. EDDY CURRENT SENSOR DEPLOYED BY ROBOT

As mentioned previously, the cruciform robot was designed to move gracefully in the horizontal direction, to move adequately in the vertical direction, and to possess some degree of steering capability. Since the majority of skin inspections lie along fastener lines oriented in the horizontal direction, the first phase of testing was performed with the robot moving in that direction. The device was designed to inspect in the vertical direction as well; testing of the robot's ability to inspect fastener lines oriented vertically will be completed during the next development phase. Below is a description of the motions necessary for the robot to inspect horizontal rows of fasteners. An analogous sequence of motions can be used to describe the inspections of vertical rows of fasteners, but it will not be explored in detail here.

The robot has three basic motions: alignment, walking, and scanning. The alignment motion refers to the condition where the spine of the robot is aligned parallel to a line of fasteners; this is done so that the sensor may be deployed and information may be gathered. The robot performs the scanning motion when it deploys the eddy current sensor and moves it along the fastener line. After the robot completes a scan, it is ready to move to another location on the aircraft to gather more data. The act of the robot moving to another location on the aircraft surface is called walking. Each of these motions will now be described in greater detail.

The alignment motion is used in two basic circumstances: when the operator initially affixes the robot to the aircraft surface and, if necessary, after the robot takes a step. Once the navigation sensors are added to the robot, this motion will be automatic; in the interim, the operator performs it manually. As shown in figure 15, two interim alignment posts have been attached to each end of the robot's spine. When its spine is not parallel to the fastener row and the tips of the alignment posts are not in line with the rivet row, the robot needs to be aligned; this is the situation shown in figure 15.

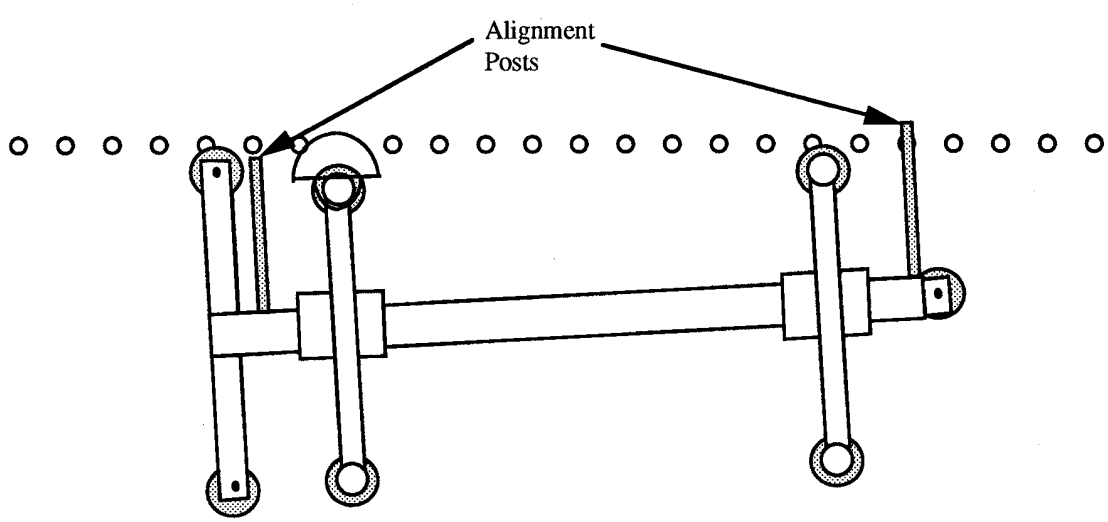

FIGURE 15. UNALIGNED ROBOT (OVERHEAD VIEW)

After the operator initially affixes the robot to the aircraft surface or after a step has been taken, the three suction cups on the spine assembly are activated and hold the robot to the aircraft surface. A profile of the robot in this position is shown in figure 16.

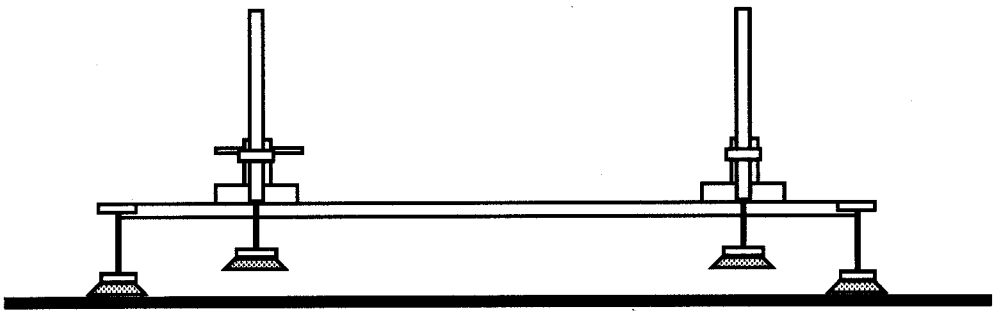

FIGURE 16. UNALIGNED ROBOT (SIDE VIEW)

Note that the sensor and stabilizer bridges are at opposite ends of the spine, the suction cups on both bridges are deactivated, and the lifters are retracted. The sensor is also lifted from the surface (this is not shown in figure 16).

To start the alignment procedure, the operator uses a set of switches to extend the lifters, activate the suction cups on the bridges, and deactivate the suction cups on the spine assembly; these actions must be performed in this order. A profile of the robot in this position is shown in figure 17 (the lift is exaggerated for clarity).

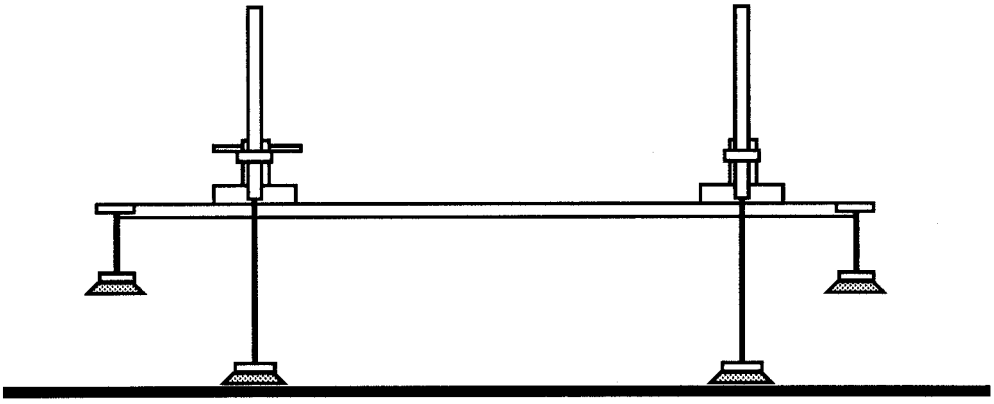

FIGURE 17. STEP 1 OF ALIGNMENT PROCESS

Next, the operator throws a switch to unlock the pivot locks on both bridges. Following this, the operator uses switches to drive the stepping motors on the lead-screw assemblies; this will adjust the position of the spine assembly. When the spine is parallel to the rivet row and the tips of the alignment posts are in line with the fasteners as shown in figure 18, the robot's spine is properly aligned to perform a scan.

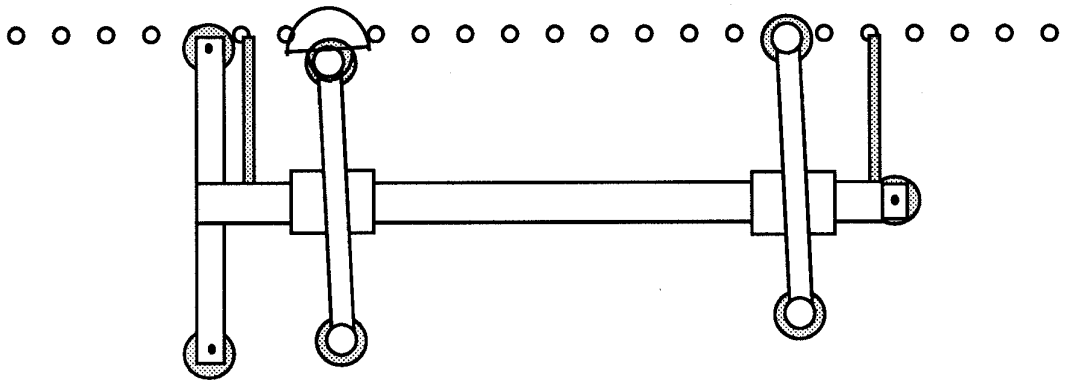

FIGURE 18. STEP 2 OF ALIGNMENT PROCESS

The operator then retracts the lifters on both bridges, activates the suction cups on the spine assembly, and deactivates the suction cups on the bridges; as before, these actions must be performed in this order. Finally, the operator uses a switch to engage the pivot locks on both bridges, locking the bridges into position perpendicular to the spine. The alignment has been completed and the robot is oriented as shown in figure 19. The operator then moves the sensor to its starting position by using a switch, and the robot is ready to scan a line of fasteners.

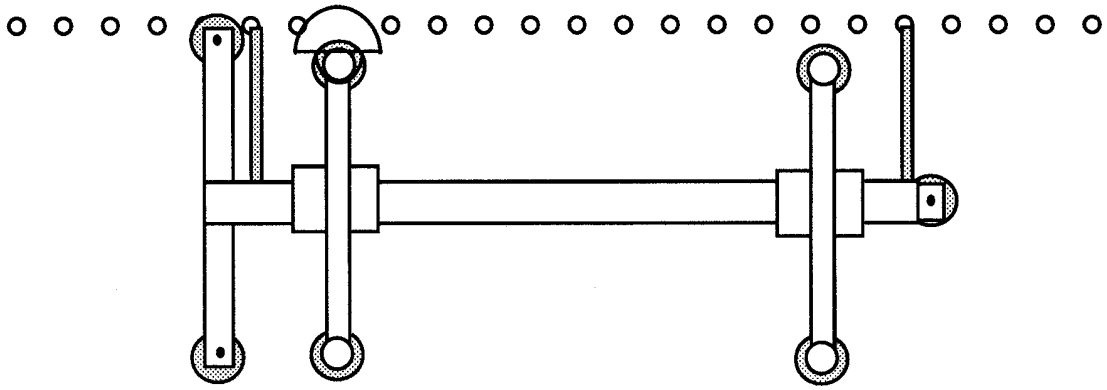

FIGURE 19. ALIGNED ROBOT (OVERHEAD VIEW)

The alignment motion can also be used to provide a degree of steering for the robot. For example, if obstacles are encountered, the direction of motion can be changed. This happens when the operator uses the alignment switches to change the position of the spine, thus changing the direction of motion. Figure 20 illustrates how the alignment motion is used to steer the robot. In future phases of development, a more flexible steering mechanism will be added if field experiments show this to be necessary.

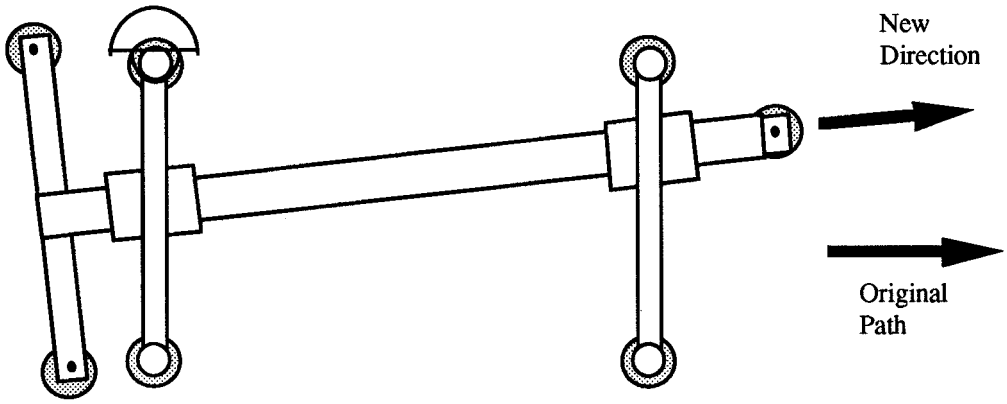

FIGURE 20. ROBOT STEERING

The inspector uses the operator's interface to control the walking and scanning motions of the robot. Unlike the alignment motion, both of these motions are automatic functions initiated from the operator's workstation. A more complete description of the operator's interface and the control software is contained in the Control System Design section of this document.

After the inspector instructs the robot to perform a scan, the robot deploys the eddy current sensor on the surface of the aircraft; the sensor is deployed with a light constant pressure simulating that provided by a human inspector. The system pauses for a few seconds to allow the operator to ensure that the eddy current system is ready to acquire data; this function will become automatic during the next phase of development. The robot moves its sensor bridge a preset distance in the direction indicated in figure 21 until it reaches the position shown in figure 22; this completes a scan of a portion of a line of fasteners. [Limit switches, which would limit the travel of the bridges, have not been incorporated into the system during this phase, but will be added during the next phase.]

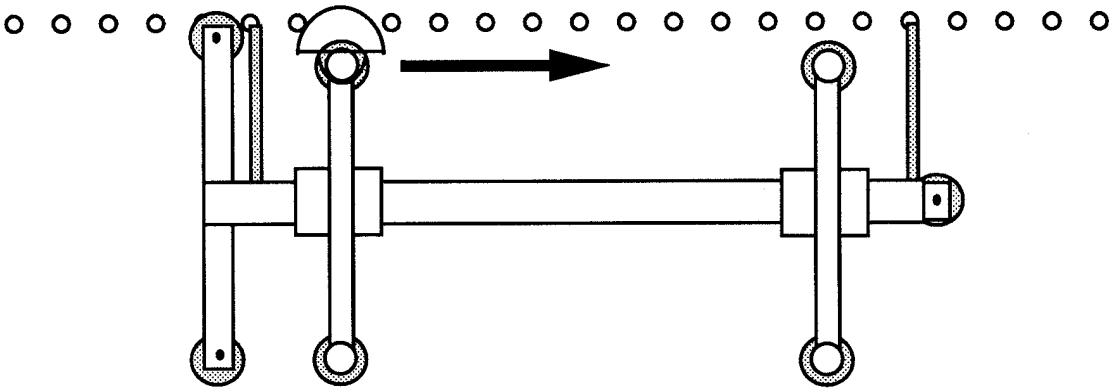

FIGURE 21. DIRECTION OF SCANNING MOTION

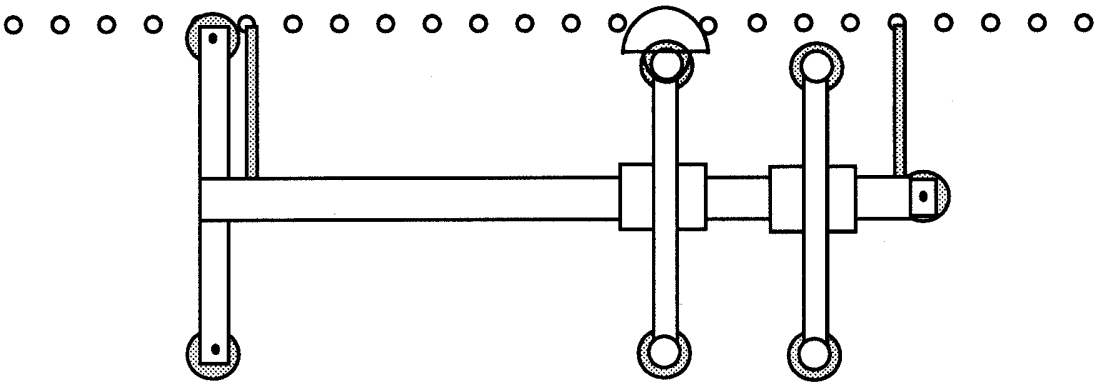

FIGURE 22. ROBOT'S POSITION AFTER SCANNING MOTION

The initial position of the robot during walking is shown in figure 23, where both of the bridges are toward one end of the spine. This will be the robot's position after it has performed a scan. If the bridges are not in this position (e.g., after an alignment has been performed), the robot will move the bridges into the configuration shown in figure 23 after the inspector instructs the robot to take a step.

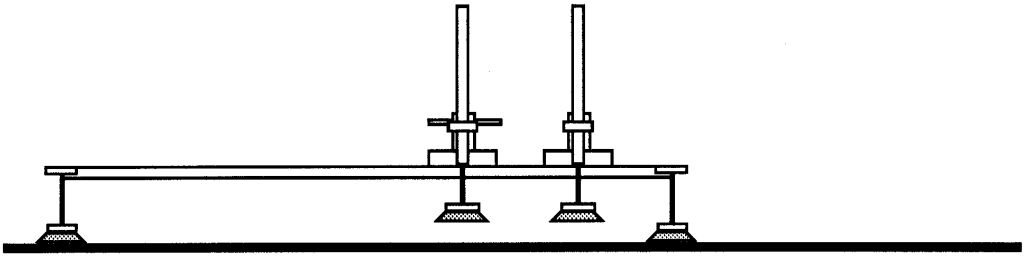

FIGURE 23. INITIAL CONFIGURATION FOR WALKING

Next, the lifters extend until the bridges' suction cups touch the surface. The suction cups on the bridges are activated, and all seven suction cups are affixed to the surface. The suction cups on the spine assembly are then deactivated, allowing the lifters to extend completely (see figure 24). The spine assembly is now lifted off of the fuselage surface.

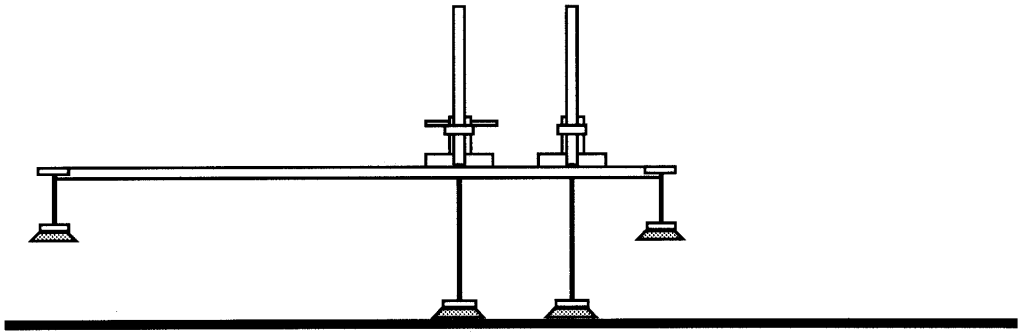

FIGURE 24. WALKING MOTION: SPINE ASSEMBLY RAISED

Both linear motors run simultaneously, causing the spine assembly to move with respect to the bridges (which are affixed to the surface). When the spine assembly has moved a preset distance, the robot will be in the configuration shown in figure 25.

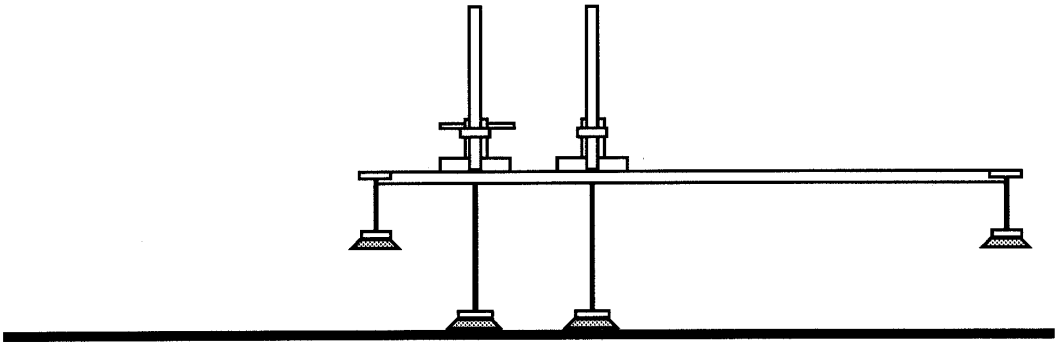

FIGURE 25. WALKING MOTION: SPINE ASSEMBLY MOTION

Next, the lifters retract until the suction cups of the spine assembly touch the surface. Those suction cups are activated, and all seven suction cups are affixed to the surface. The suction cups on the bridges are then deactivated, allowing the lifters to retract completely as shown in figure 26.

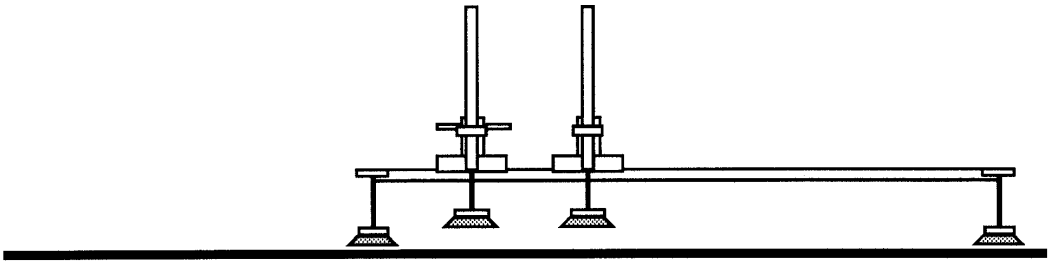

FIGURE 26. WALKING MOTION: SPINE ASSEMBLY LOWERED

Finally, the stabilizer bridge is moved to the far end of the spine as shown in figure 27. If the robot needs to be aligned, the alignment process is initiated. Once aligned, it is ready to scan a line of fasteners.

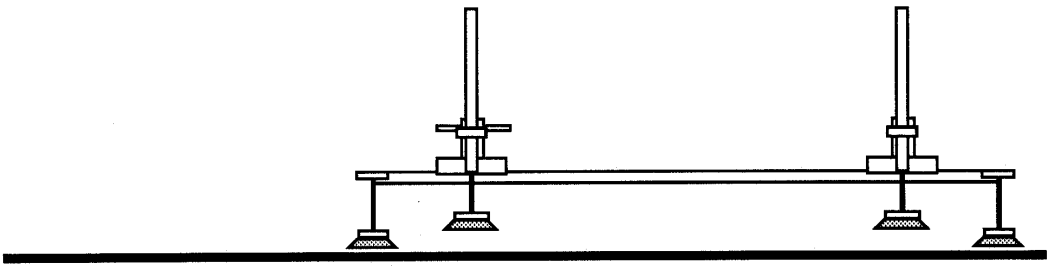

FIGURE 27. WALKING MOTION: STABILIZER BRIDGE MOVED INTO POSITION

The robot described above was designed to inspect the main fuselage sections of aircraft the size of the McDonnell Douglas DC-9 (or Boeing 737) and larger. The design can be adapted to inspect

highly curved areas such as the nose or tail, hard-to-reach areas such as those around windows or doors, and smaller aircraft. The robot designed by the Carnegie Mellon team can be scaled either larger or smaller; most components used to build the robot are commercially available in a variety of sizes. Thus, for smaller aircraft or for areas on larger aircraft with greater curvature, a smaller version of the prototype could be produced. This version would weigh less than the current version, but it would also have a much shorter maximum scanning distance. It would have to take several steps to inspect the same number of fasteners that the current prototype can inspect in one step.

When inspecting large aircraft such as the McDonnell Douglas DC-10 or the Boeing 747, it might be advantageous to build a large version of the robot to cover even greater distances with a single scan. Of course, the larger versions would weigh more, so there is a practical limit to the maximum size. In addition, scaling relations favor smaller devices when suction cups are used as the affixing means. Ultimately, the size of production versions will be driven by the requirements of aircraft inspectors. During the testing of the system on aircraft owned by USAir and those owned by other airlines, it will be decided which aircraft are best suited to robotic inspection and which inspections benefit most from the automated deployment of sensors. This will determine the optimum size of the robot. Several sizes of spine assemblies and bridges may be commercially produced, allowing end users to buy robots to fit their needs.

In addition, special attachments could be developed to enable the robot to inspect hard-to-reach areas. For example, inspecting areas around the windows of an aircraft could prove troublesome because these are areas on the fuselage on which maneuvering might be difficult. If some type of window inspection is required, a special attachment allowing access to the inspection area from an area above (or below) the windows might be used.

The design can also be easily extended to incorporate other NDI sensors. During this phase of development, the prototype can deploy a reflectance eddy current probe, and the basic requirements for mounting small cameras on the device have been written (see Sensors section below). In the future, a number of NDI sensors will be mounted on the sensor platform. Of the probes commonly used by inspectors today, pencil eddy current sensors and ultrasonic sensors are good candidates for inclusion in the sensor suite. New NDI sensors, such as the magneto-optic sensor developed by Physical Research, Inc. [2), and new techniques, such as shearography [3], will become FAA-approved and operator-accepted in the next few years. As new sensor technologies emerge, they will be evaluated and included as part of the sensor suite if appropriate.

A tether to secure the robot from above will be designed, built, and tested during the next phase of development. If the air supply is lost during an inspection, the robot will no longer be able to adhere to the surface; the tether will prevent the robot from falling to the ground. As currently envisioned, the tether will be secured to the safety lines already present for human inspectors; these safety lines are mounted on trolleys that run parallel to the horizontal axis of the aircraft from nose to tail. The trolley-mounted safety lines give inspectors the freedom to move along the length of the aircraft and secure them from falling.

However, the tether arrangement for the robot will not work when the robot is positioned on the "belly" of the aircraft. The clearance underneath a typical mid-size jet aircraft (e.g., McDonnell Douglas DC-9 or Boeing 737) is about 40 inches (1 m), and the approximate radius of the fuselage is 75 inches (1.9 in). If the robot were positioned on the "belly" of the aircraft as shown in figure 28, the tether would follow the circumference of the fuselage to this point.

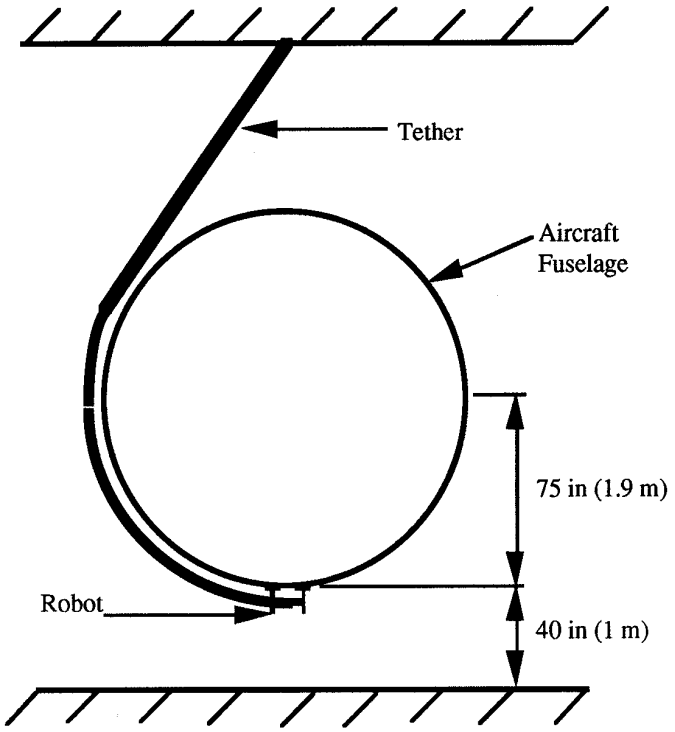

FIGURE 28. ROBOT TETHERED TO BOTTOM OF AIRCRAFT

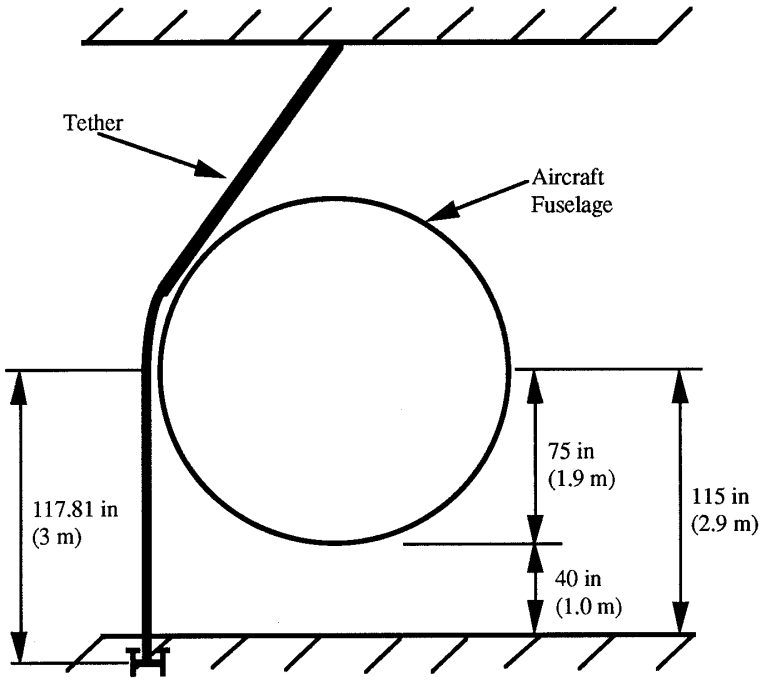

FIGURE 29. TETHER LIMITATION

If air is lost when the robot is in this position, the tether will not prevent the robot from hitting the ground. This is illustrated in figure 29. Note that the tether is too long to keep the robot from falling to the hangar floor. A means of tethering the robot for this special case will be designed in the next phase of development. One of the designs under consideration is shown in figure 30; in this design, when the robot is inspecting the "belly" of the aircraft, a second tether suspended from the opposite side of the fuselage would be attached to the robot in order to prevent the device from falling if the air supply is lost.

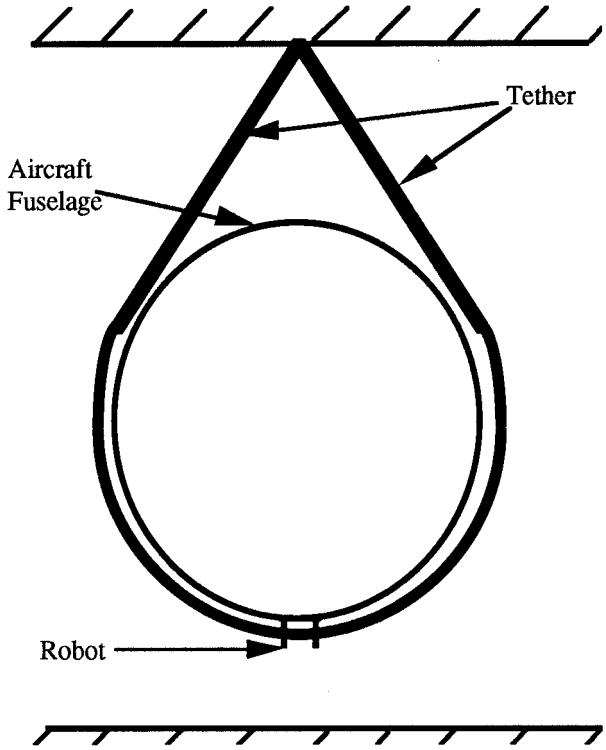

FIGURE 30. SPECIAL-CASE TETHER

As mentioned previously, a heavy version of the robot was built during this phase of development to reduce the time necessary to fabricate and assemble the device. In addition, a strategy for reducing the weight of the robot was developed. One area where significant weight can be removed is the spine assembly which weighs roughly 12 pounds (5 kg), or about forty percent of the total weight of the device. On the prototype device, the spine is a solid steel bar with a rectangular cross section. Experimentation with a test piece, which was machined into a U-shaped cross section, proved that up to two thirds of the weight can be removed from the spine without adversely affecting the functionality of the robot. During the next phase of development, the weight of the spine will be reduced significantly. In addition, the possibility of using alternative materials, such as magnesium or plastics, and lighter components, such as smaller valves and cylinders, will be explored. The weight of the device is expected to be cut in half to approximately 15 pounds (7 kg). Such a weight reduction is necessary if the robot is to become a valuable inspection tool since lifting a heavy device and positioning it on the fuselage is uncomfortable.

The robot has been successfully affixed to flat horizontal surfaces such as tables, flat vertical surfaces such as walls, and curved surfaces such as the simulated aircraft panel. No limitations were observed with respect to the ability of the robot to adhere to surfaces, regardless of the orientations of those surfaces. The alignment, scanning, and walking motions of the robot were tested to ensure that they functioned as specified. The manually-controlled alignment procedure successfully aligned the robot

to a line of fasteners, and the robot's scanning motion was used to deploy a reflectance eddy current sensor and move it along a fastener line. The robot was able to walk along the aircraft panel, and a coordinated scan and walk motion was performed. Thus, the design of the robot satisfied the mobility and manipulation requirements of the skin inspection application.

The implementation of the design resulted in a need to align the robot to the fastener line after each step; the accumulated error was too large. The robot strayed from its path approximately 0.125 inches (3.2 mm) during each step due to excessive compliance in the system. With the reflectance eddy current sensor requiring that it be aligned ±0.05 inches (±1.3 cm) from the center of a fastener, an alignment was necessary after every step with the initial prototype. To correct the problem of error accumulation during walking, the design team decided to increase the stiffness of the system. The bearing arrangement holding the linear motors to the spine needs to be improved, and the stiffness of the lifters when fully extended also requires improvements. These enhancements to the system will be added early in the next phase of development.

Experiments measuring the leak rates at various positions on aircraft showed that vacuum pumps with one half of the air consumption of those on the prototype could be used without sacrificing system performance. The performance of the reduced-flow vacuum pumps vis-a-vis leak rates on aircraft surfaces was nearly identical to the performance of the larger vacuum pumps.

SENSORS.

Visual inspections currently account for ninety percent (90%) of the inspections performed on aircraft; the remainder are other forms of nondestructive inspections, the majority of which are eddy current inspections. Thus, the major objective concerning the selection of sensors for the robotic inspection system was to be able to provide for both visual and eddy current inspections. The automated deployment of eddy current sensors was explored first because it is much easier to implement than is an automated visual inspection system. More specifically, the objective used to develop the sensor system was to initially investigate at least three NDI sensors for inclusion on the sensor platform: a high frequency eddy current sensor to find surface flaws, a low frequency eddy current sensor to find subsurface flaws, and video cameras for visual examination of the surface and for navigation.

There are many types of eddy current sensors used by inspectors to examine the fuselages of aircraft. The philosophy used with regard to sensor selection for the robotic system was to choose sensors that are both FAA-approved and operator-accepted. A comparison of results can then be made between the sensors that are deployed manually and those that are deployed robotically. One of the most popular types of sensors is the reflectance probe, also known as the sliding probe. Reflectance probes have separate driver and pickup coils and are deployed over a row of fasteners as shown in figure 31. They are scanned over the fastener heads, and the differences in the complex impedance-plane displays for good fastener holes and those with cracks are noted. Because of its universal acceptance, the reflectance probe is a good choice to be included in the robotic system.

The Nortec SPO-1958 eddy current sensor is the reflectance-type sensor chosen for the robotic system. This probe can operate at frequencies between 100 Hz and 40 kHz, allowing for both subsurface crack detection at low frequencies and surface crack detection at high frequencies. At its lowest frequencies, the SPO-1958 produces eddy currents that can penetrate up to a depth of 0.50 inches (13 mm).

Various eddy current systems were evaluated with respect to their applicability to this project. SE Systems SmartEDDY 3.0 system was chosen because it operated on a PC platform and could easily be integrated into the robotic system. The SmartEDDY 3.0 has a dual frequency feature, meaning that one probe can be run simultaneously at two different frequencies. Thus, for the robotic system, one SPO-1958 can simultaneously search for both surface and subsurface defects; the electronics effectively makes this two independent sensors.

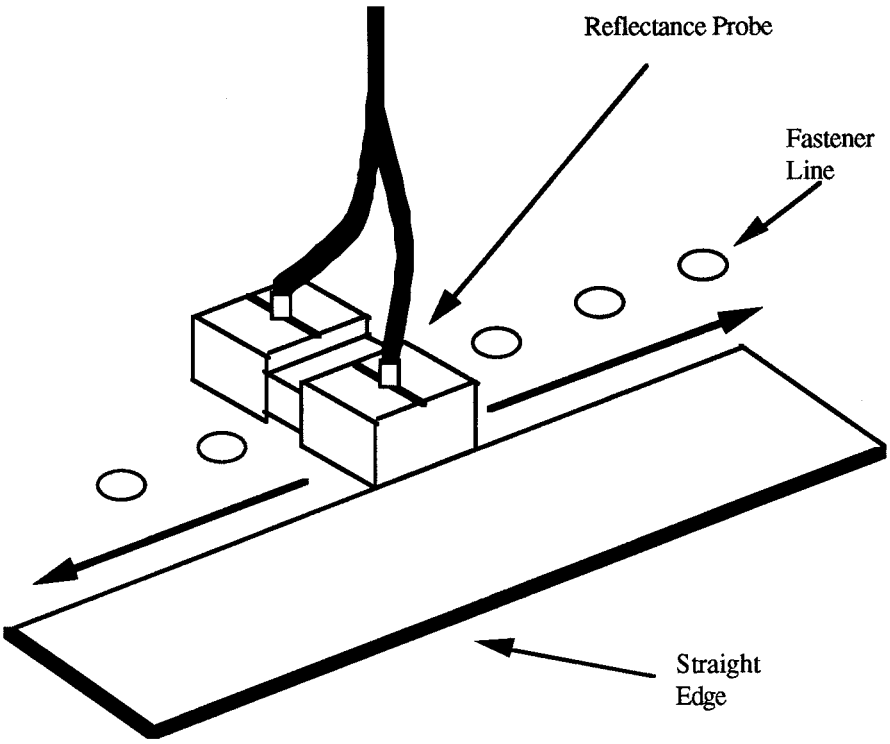

FIGURE 31. REFLECTANCE EDDY CURRENT SENSOR

To aid operators in identifying abnormal signals, manufacturers of eddy current instruments provide alarm thresholds. Such features are available on the SmartEDDY system. In practice, these alarm features are seldom used during inspections since the oscilloscope display provides a richer kind of information, helping the operators to make subtle decisions. Future phases of this project will explore pattern recognition based on captured operator perceptions as a system feature designed to aid in the classification of signals. An operator will be alerted to the existence of unusual signals as they are encountered. The data will subsequently be examined by the inspector who will decide whether the signal was caused by a flaw or not.

As mentioned previously, visual inspections account for most of the inspections performed on aircraft today. Providing a means of acquiring images of the fuselage surface for inspectors is very important. Aircraft inspectors note that, even when they are performing nonvisual nondestructive inspections on a fuselage, they tend to notice other defects as well. For example, when inspectors use eddy current sensors to examine lap joints for cracks around the fasteners, they are also looking at the area for other types of flaws and damage, such as dished rivet heads and lightning strikes. Video cameras mounted on the robot will be used to acquire such images of the fuselage. The vision system will have three basic functions:

- To provide images of the surface for the operator
- To aid in navigation, alignment, and collision avoidance
- To perform machine-vision-based inspections

To perform the functions outlined above, four cameras will be included on the inspection device. The camera positions, shown in figure 32, are:

- One High Magnification Camera - This camera will have roughly a one-rivet field of view and will be mounted in close proximity to the eddy current sensor. Illumination will be provided by a ring light or equivalent. The camera will be used to confirm probe location and to give the inspector a close-up view of selected rivets.

- Two Alignment Cameras - For alignment purposes, cameras will be mounted at both the head and tail ends of the spine. Each of these cameras will have a field of view of approximately 4 to 6 inches (10 - 15 cm). They will require low angle illumination, possibly from the opposite ends of the spine and will be used to align the spine of the robot parallel to the row of rivets to be inspected. Algorithms for finding lap joints and rows of rivets and for providing feedback for the alignment control system are under development.

- One Broad Field of View Camera - This will be mounted on the tail end of the spine assembly. The camera will have pan and tilt functions and will use either ambient light or some type of flood lighting. It will be used for obstacle avoidance, long-range navigation, robot positioning and status evaluation, and wide-area visual inspection.

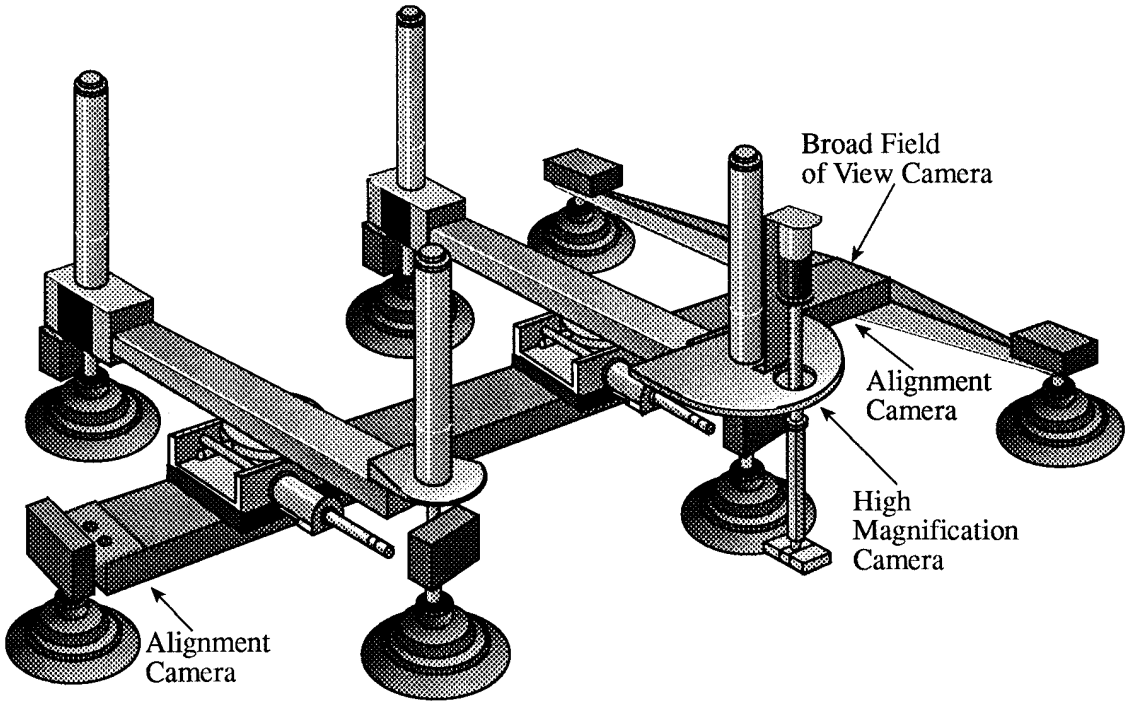

FIGURE 32. CAMERA PLACEMENT

During laboratory testing, the robotic system deployed the eddy current sensors over the fastener lines on the simulated aircraft panel, and the traces displayed on the PC monitor clearly showed the eddy current signals. The results were identical to those resulting from manually deployed eddy current sensors. Experiments with a number of small cameras showed that the proposed camera positions give the necessary images for visual inspection, obstacle avoidance, spine alignment, and robot evaluation and navigation.

CALIBRATION.

During the first phase of development, the main objective in the calibration of the robotic system was to ensure that the operator sees a clear and distinct separation of signals between those produced by areas on an aircraft containing flaws and those produced by flaw-free areas. In essence, during the calibration procedure, the operator is being calibrated with the eddy current sensor. In future phases of the project, calibration techniques for other parts of the system, such as the navigation subsystem (based on database and vision), will be developed.

The method of calibrating the eddy current sensor of the robotic system is based upon the accepted methods of calibrating eddy current sensors for manual inspections. Those methods require eddy current sensors to be initially deployed on a calibration standard before they are deployed on an aircraft. A calibration standard contains both areas without flaws which result in a consistent trace on eddy current instruments and areas containing flaws which result in traces that differ from those produced by the flaw-free areas. A standard is shown in figures 33 and 34, depicting the front and back of the standard, respectively. The front of the standard represents the outside skin which is normally accessible to inspectors while the back represents the substructure which is normally inaccessible to inspectors.

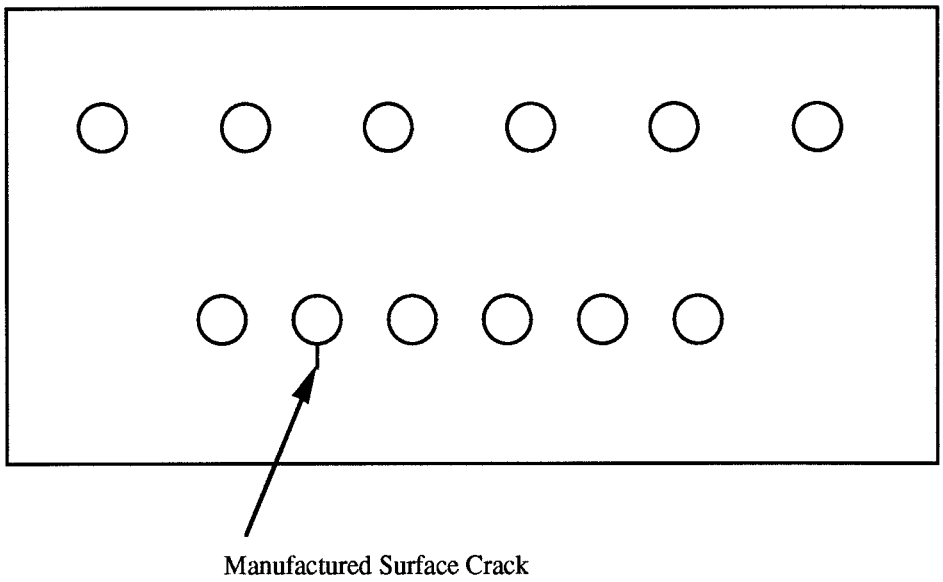

FIGURE 33. CALIBRATION STANDARD (FRONT)

Operators can see the differences between signals produced by flaw-free areas and those produced by areas with flaws by deploying an eddy current sensor on a standard. After the sensors are manually deployed on a standard and the differences in traces are noted by the operator, the sensors are considered to be calibrated. When an inspection is executed on an aircraft fuselage, the unknown areas are classified with respect to the good and bad signals previously generated from the calibration procedure. Similarly, before the robot deploys its eddy current sensor on the simulated aircraft panel, the sensor is first deployed on a calibration standard. To keep the automated inspection system consistent with airline procedures, the calibration standards used in today's manual inspection procedures will also be used by the robot.

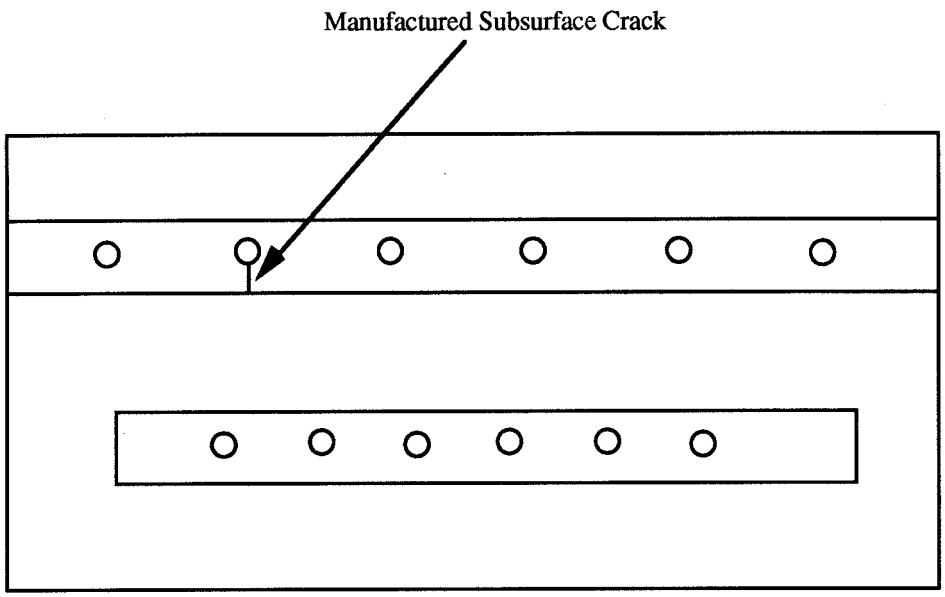

FIGURE 34. CALIBRATION STANDARD (BACK)

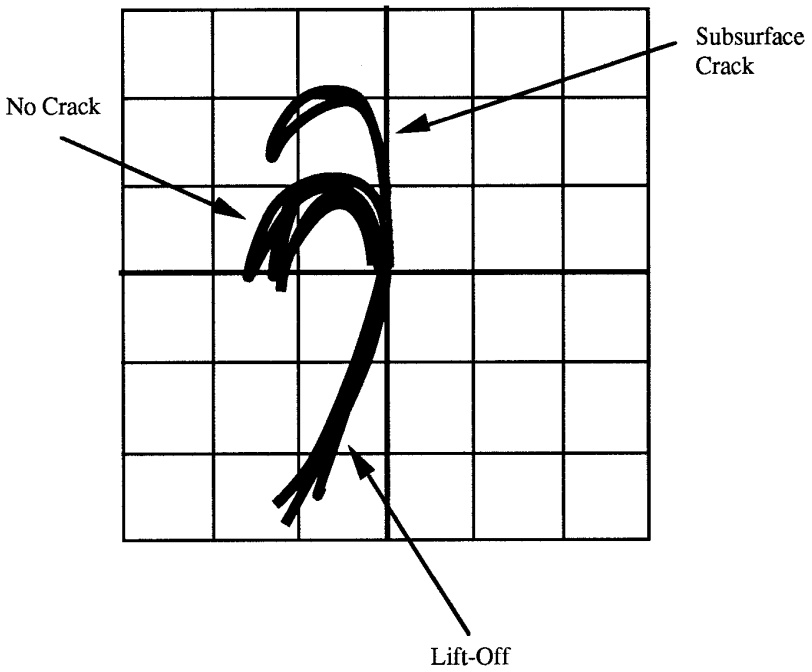

FIGURE 35. EDDY CURRENT INSTRUMENT DISPLAY FOR SUBSURFACE CRACK

The calibration standard shown in figures 33 and 34 is the type used to calibrate the robotic system; it contains both surface and subsurface flaws. Because it contains both types of flaws, it is an appropriate standard for the robotic system. When it is being calibrated, the eddy current data acquisition and analysis software is set for two frequencies: low frequency to detect subsurface flaws and high frequency to detect surface flaws.

The low frequency setting is calibrated when the robot deploys the sensor and scans the top row of rivets in the standard. The system parameters for the low frequency calibration are set such that the eddy current instrument display resembles figure 35, which is a drawing representing the oscilloscope output that an operator sees. An x-y position on the display represents the complex number that characterizes the impedance of the metal under the probe; the curves in figure 35 represent the variation of impedance as the probe is moved over several good fasteners and one containing a subsurface crack.

The signal produced by the subsurface crack is easily separated from the signals produced by the flaw-free areas. When this type of display is produced after the system has deployed the sensor over the top row of fasteners, the system has been calibrated to find subsurface cracks similar to those found in the standard.

Similarly, the high frequency setting is calibrated when the robot deploys the sensor and scans the bottom row of rivets in the standard. The system parameters for the high frequency calibration are set such that the eddy current instrument display resembles figure 36.

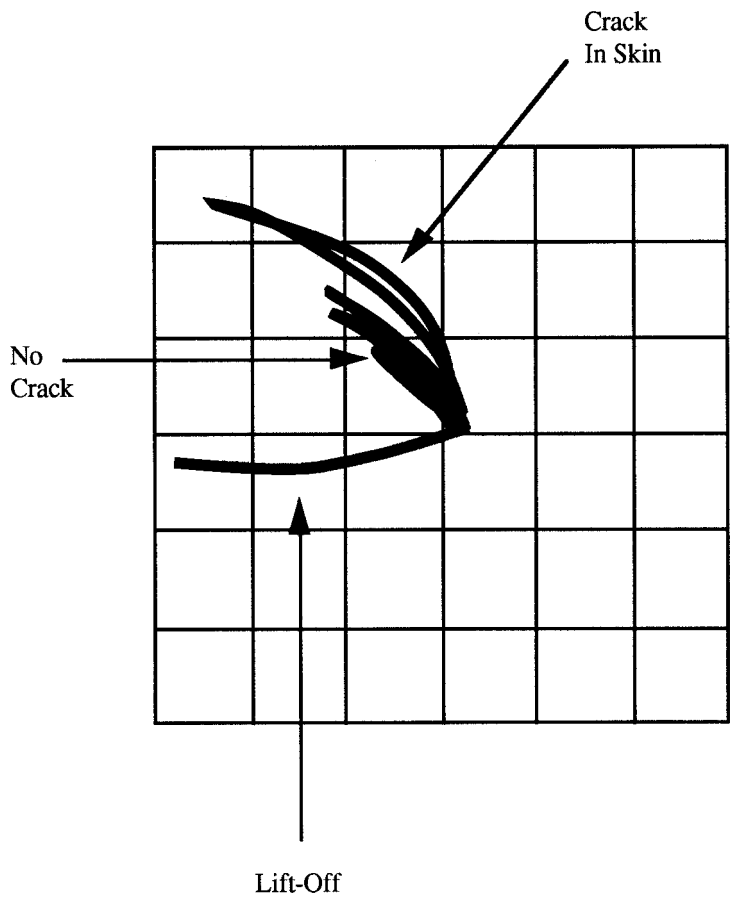

FIGURE 36. EDDY CURRENT INSTRUMENT DISPLAY FOR SURFACE CRACK

The signal produced by the surface crack is easily separated from the signals produced by the flaw-free areas. When this type of display is produced after the system has deployed the sensor over the bottom row of fasteners, the system has been calibrated to find surface cracks similar to those found in the standard. After both the high and the low frequency settings have been properly calibrated, the sensors can be deployed on the simulated aircraft panel to inspect for flaws.

The method described above to calibrate the system proved to work well. The system parameters for both high and low frequencies were adjusted to produce signals comparable to those shown in figures 35 and 36, respectively, providing a clear separation of signals for the operator. Thus, the eddy current sensor on the robotic system was properly calibrated to find both surface and subsurface cracks simultaneously.

CONTROL SYSTEM DESIGN.

During this development phase, the main objectives for the control system were to develop a strategy that would control the walking and scanning motions of the robot, to implement the hardware and software necessary to perform the scanning motion, and to develop a prototype menu-driven operator interface for the system. The software necessary to control the walking motion was to be initiated, but not completed, during this phase.

The interface between the inspector and the robotic system is a pull-down menu system implemented on an 80486/DOS PC. The menu system allows the user to describe high-level robot actions such as scanning and walking. The major control functions for the system are implemented via RS-232 communication lines that transmit command and status messages between the computer's serial ports and the controllers for the linear motors and lead screw motors. The pneumatic components are controlled via solenoid valves operated by digital I/O lines on a multipurpose (analog, digital, time, etc.) card on the PC bus.

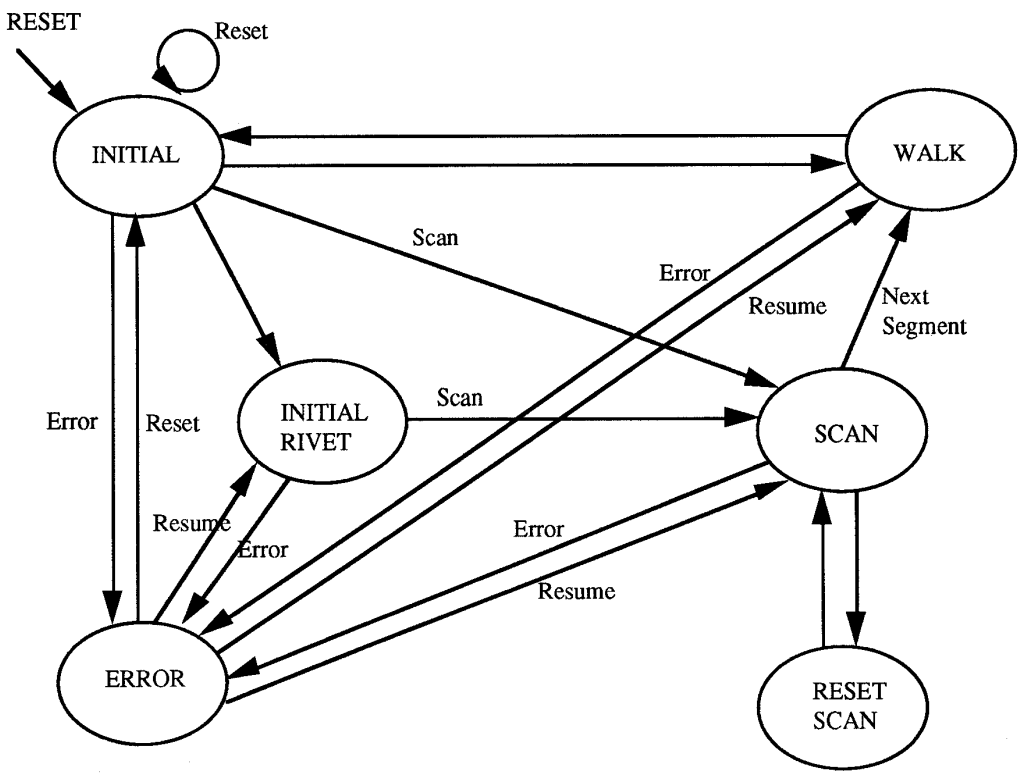

FIGURE 37. ROBOT STATES

Descriptions of the scanning, walking, and alignment motions of the robot that may be helpful in understanding the remainder of this section can be found in the Mechanical System Design section of

this document. The operator interface for the system and the operational states that control the robot's motion are described in more detail below. Figure 37 shows the four defined states of the robot: INITIAL, ERROR, WALK, and SCAN.

The operator has four buttons that can be used to begin and end the inspection process; they are currently located on a switch box in the work space. In future phases of development, they will be placed on the robot for operator convenience. The buttons are:

- Initialize - This function is used to define the INITIAL state of the robot which is done before the robot is placed on the aircraft. The robot's bridges are manually moved to their home positions, and, when the Initialize button is pressed, this position is registered. In future phases, sensors will be placed on the robot to define the home positions of the elements, eliminating the need for the Initialize button.
- Reset - When the operator presses this button, the robot will go to its INITIAL state, sending all elements to their home positions.
- Affix - Pressing this button will activate the three suction cups on the spine assembly, allowing the operator to affix the robot to an aircraft.
- Clear - When the operator presses this button, all suction cups are deactivated, allowing the operator to remove the robot from the aircraft surface.

Thus, the INITIAL state is defined off-line by the operator. In general, the INITIAL state comprises the following actions, which are also shown graphically in figures 38 and 39:

- The sensor bridge linear motor is placed near the tail end of the spine while the stabilizer bridge linear motor is placed near the head end of the spine.
- The lead-screw assemblies of both bridges are centered with respect to the spine.
- The suction cups on the spine assembly are activated (if they are not already activated).
- The suction cups on both bridges are deactivated and the lifters are retracted.
- The sensor is lifted from the surface.

To start the inspection process, the inspector positions the robot on the aircraft skin at a desired location and presses the Affix button. This ensures that the robot affixes to the skin and that it is in its INITIAL state. If necessary, the Reset button may be pushed to re-home the linear motors. When positioning the robot, the operator must position the spine approximately parallel to the line of fasteners to be inspected and the eddy current probe approximately above the initial rivet to be inspected. After the robot is correctly placed in its starting position and is in its INITIAL state, it is ready to start the inspection process.

The first two steps in the inspection process are: ensuring that the spine is parallel to the fastener line and ensuring that the eddy current sensor is over the initial rivet. The sensing required to do these steps automatically will be added during the next phase of development. In the interim, the operator is required to manually align the robot and position the sensor over the initial fastener using a set of switches as described in the Mechanical System Design section.

After the operator has performed the alignment and positioned the sensor, the robot is ready to scan the line of fasteners. A command issued by the operator from the workstation puts the robot into the SCAN state. In this state, the eddy current sensor is deployed and the sensor bridge linear motor moves the sensor bridge along the fastener line at a preset speed. The data gathered by the eddy current sensor are sent to the workstation where they are displayed on the monitor. The operator

must view the eddy current data and make judgments as to the presence and extent of defects. The SCAN state ends when the sensor bridge completes its travel; this is determined by a preset value of the distance. A scan can be repeated by selecting the Scan command from the operator's menu on the workstation. Entering the SCAN state directly from the INITLAL state is possible; this may be helpful in certain diagnostics or for special inspection modes.

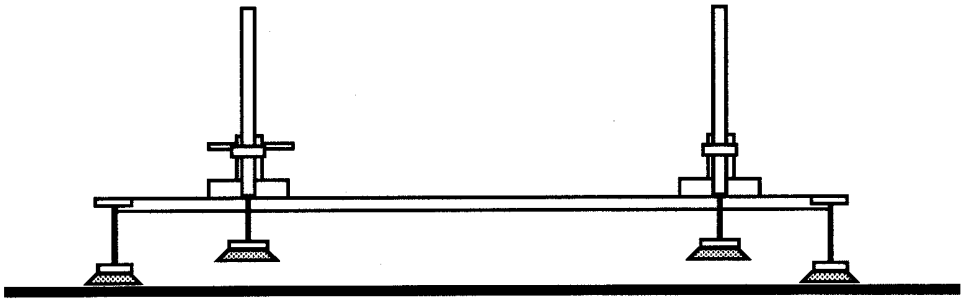

FIGURE 38. ROBOT INITIAL STATE (SIDE VIEW)

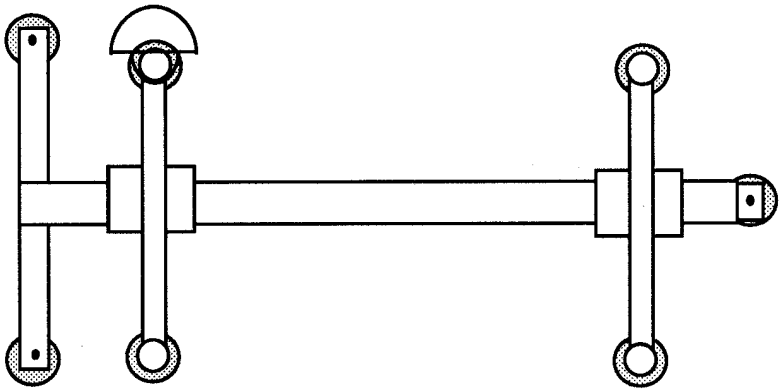

FIGURE 39. ROBOT INITIAL STATE (OVERHEAD VIEW)

Once the scan has been completed, the next section of the fastener line may be inspected. The next segment command from the operator's menu initiates the walking motion of the robot. The WALK state is characterized by the sequencing of valves and motors to translate the robot to the next segment of fasteners for inspection. Currently, no checks are performed to ensure adhesion to the skin, alignment of the spine, and proper positioning of the sensor; these checks will be added during the next phase of development. Spine alignment and sensor positioning must be performed manually as described above. Entering the WALK state directly from the INITIAL state is possible; this may be helpful in certain diagnostics or for special inspection modes.

The ERROR state can be entered from any of the other states. When a command is chosen, the sequence of actions initiated could fail to meet the expected results. If this happens, an error message will appear on the screen and the operation will be suspended. If the problems can be corrected easily, without disturbing the state of the robot, the operator can select the Resume command to repeat the failed action and continue the inspection. If extensive repair to the robot is required, the operator can select the Reset command to put the robot into the INITIAL state. To control the motion of the robot as described above, the operator issues a series of commands from the workstation. The remainder of this section describes the interface used by the operator to control the robot's actions.

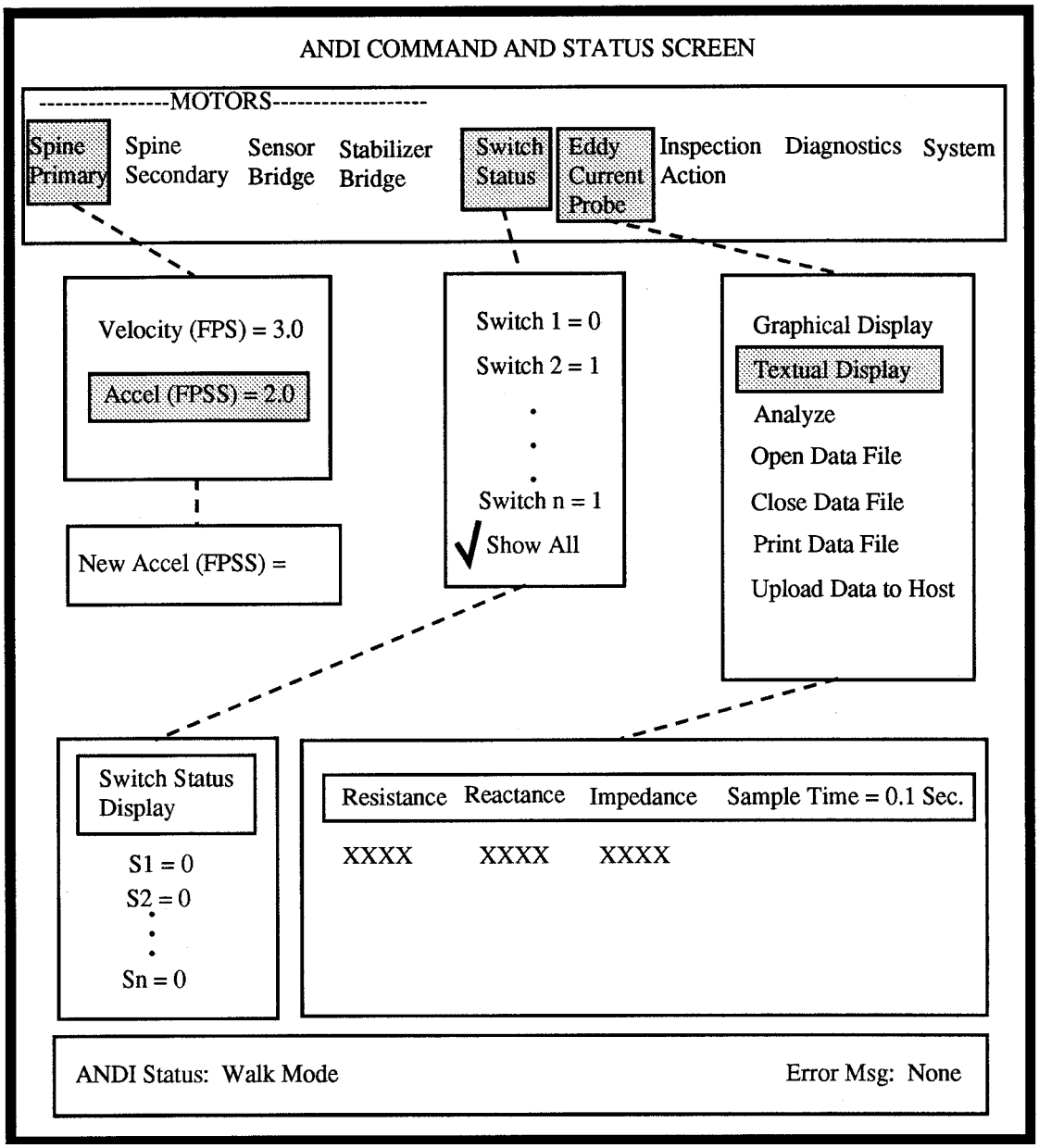

FIGURE 40. OPERATOR INTERFACE

The operator interface for the system consists of menu bars and pull-down menu selections as shown in figure 40. The following operations can be performed by using the menu bars at the top of the Command and Status Screen:

- Set/Modify Motor Parameters
- Display Status/Sensor Data
- Perform an Inspection
- Perform System Diagnostics

The top half of the screen is used to display the user-selectable pull-down menu options for initializing, running, and checking the system. The bottom half of the screen is reserved for system status information should the operator desire to look at it. The operator can also look at a graphical representation of the impedance-plane display while the system is running. The impedance-plane representation will be displayed in a window on the PC monitor.

User commands are subdivided into three basic categories: component commands, inspection commands, and maintenance commands. Each of these categories will be described in more detail below.

Component commands allow the operator to view and modify attributes associated with specific robotic components such as motors or suction cups. The operator can use these commands to experiment with component values to determine the optimal operational values. These commands may also be used to change parameters when programming the robot for more complicated inspections. In general, these values are global and remain in effect until they are changed by the operator or until the system is reset. The following list briefly describes each of the component commands:

- Spine Primary Linear Motor - This selection refers to the linear motor upon which the sensor bridge rests; one of two actions will be performed by this motor depending on the robot's state. If the robot is in the SCAN state, the spine assembly will be affixed to the surface and the motor will translate along the spine, causing the eddy current sensor to move over a fastener line. If the robot is in the WALK state, the suction cups of the sensor and stabilizer bridges are affixed to the surface and the spine assembly is elevated over the surface; running the motor moves the spine in the appropriate direction. Selecting this item from the main menu bar will give the operator the opportunity to set the motor's velocity and acceleration parameters.

- Spine Secondary Linear Motor - This selection refers to the linear motor upon which the stabilizer bridge rests; one of two actions will be performed by this motor depending on the robot's state. If the robot is in the SCAN state, the spine assembly will be affixed to the surface and this motor remains stationary. If the robot is in the WALK state, the suction cups of the sensor and stabilizer bridges are affixed to the surface and the spine assembly is elevated over the surface; running the motor moves the spine in the appropriate direction. Selecting this item from the main menu bar will give the operator the opportunity to set the motor's velocity and acceleration parameters.

- Sensor Bridge Motor - This selection refers to the motor of the lead screw assembly that is used as part of the sensor bridge. This motor is used to align the spine parallel to the fastener line to be inspected, to locate the rivet line to be inspected, and potentially to allow the robot to walk in the direction perpendicular to the direction of the spine. Selecting this item from the main menu bar will give the operator the opportunity to set the motor's velocity and acceleration parameters.

- Stabilizer Bridge Motor - This selection refers to the motor of the lead screw assembly that is used as part of the stabilizer bridge. This motor is used to align the spine parallel to the fastener line to be inspected and potentially to allow the robot to walk in the direction perpendicular to the direction of the spine. Selecting this item from the main menu bar will give the operator the opportunity to set the motor's velocity and acceleration parameters.

- Switch Status - This selection allows the user to view the status of the binary sensors (switches) on he robot. The operator can use this to check whether the suction cups are affixed to the surface, whether the sensor is deployed, etc.

The inspection commands allow the operator to perform inspections and to view the output from the eddy current sensor. The operator can use these commands to move the robot along a desired

path and to interact directly with the sensor. The following list briefly describes each of the inspection commands:

- Eddy Current Probe - This selection allows the operator to view and store data acquired by the eddy current sensor. Selecting this item from the main menu bar will give the operator the opportunity to view either graphical or textual displays of the eddy current data; to access the SmartEDDY eddy current software; to open, close, or print a data file; and, in the future, to upload a data file over the Ethernet.

- Inspection Action - This selection allows the operator to instruct the robot to perform an inspection along a single line of rivets or to perform a sequence of motions that comprise an action. Selecting this item from the main menu bar will give the operator the opportunity to reset the robot to its INITIAL state, to locate a fastener, to scan a line of fasteners, and to step to the next segment of the fastener line being inspected.

The maintenance commands allow the operator to directly control certain hardware on the robot. For example, turning motors on/off and activating/deactivating specific suction cups can be accomplished by using these commands. In addition, computer system functions such as escaping or exiting to DOS are included here. The following list briefly describes each of the maintenance commands:

- Diagnostics - This selection allows the operator to directly actuate all of the components of the robot. It functions primarily as an integrity check of the component selected in the pull-down menu.

- System - This selection allows the operator to interact with the computer's operating system.

The operator interface and control system described above were developed and successfully tested on the system; the 486 PC was sufficient to control the system. An integrated control system was designed and developed, and the software was able to control both the walking and the scanning motions of the robot; this was beyond the requirements of the grant which specified only that the robot be able to scan a length of skin seam. In addition, a coordinated walking and scanning motion was achieved during the testing of the system.

DATA MANAGEMENT.

A major goal of the Automated Inspection of Aircraft Project is to develop a data management system which includes both signal and image processing as well as a database of inspection information. This will begin during the next phase of the project; however, some initial groundwork for the development of the data management system was scheduled for the first phase of the project. The primary objectives during this phase were to investigate the data that are needed in a database of inspection information and to determine the techniques that are used by aircraft inspectors to classify eddy current signals. The data acquisition and analysis functions used by the system during this phase were confined to those available in commercial eddy current systems.

A lot of information can be stored about any given flaw found on the skin of an aircraft. Members of the Carnegie Mellon team discussed this issue with USAir inspection managers and developed a list of data that the managers felt were the most relevant. The following items were identified by the inspection managers:

- The location of defect

- The description of the defect

- The inspection being performed when the defect was found

This will also be discussed with representatives of other airlines to develop a complete list of relevant inspection data. During the next phase of development, a database architecture will be specified.

Discussions with USAir NDI inspectors clearly showed that they classify eddy current signals based on samples of "good" and "bad" signals generated when they deploy an eddy current sensor on a calibration standard. They do not use quantitative means when classifying signals, but instead, base their decisions on how a signal compares to known patterns. While a person can easily distinguish between the signals produced by normal and flawed rivets, the signals are not unidimensional, and, in many cases, simple thresholding may not be definitive. Pattern recognition methods, which capture the discrimination criteria being used by human inspectors without explicitly requiring the inspectors to articulate (in words) the criteria, are most suitable for automating this kind of decision making. In future phases of this project, pattern recognition techniques will be selected to aid in the classification of abnormal signals. The robot will mark the area producing an abnormal signal, and the operator will be responsible for examining the site and making the final judgment as to whether the abnormality was caused by a flaw or by some other anomaly.

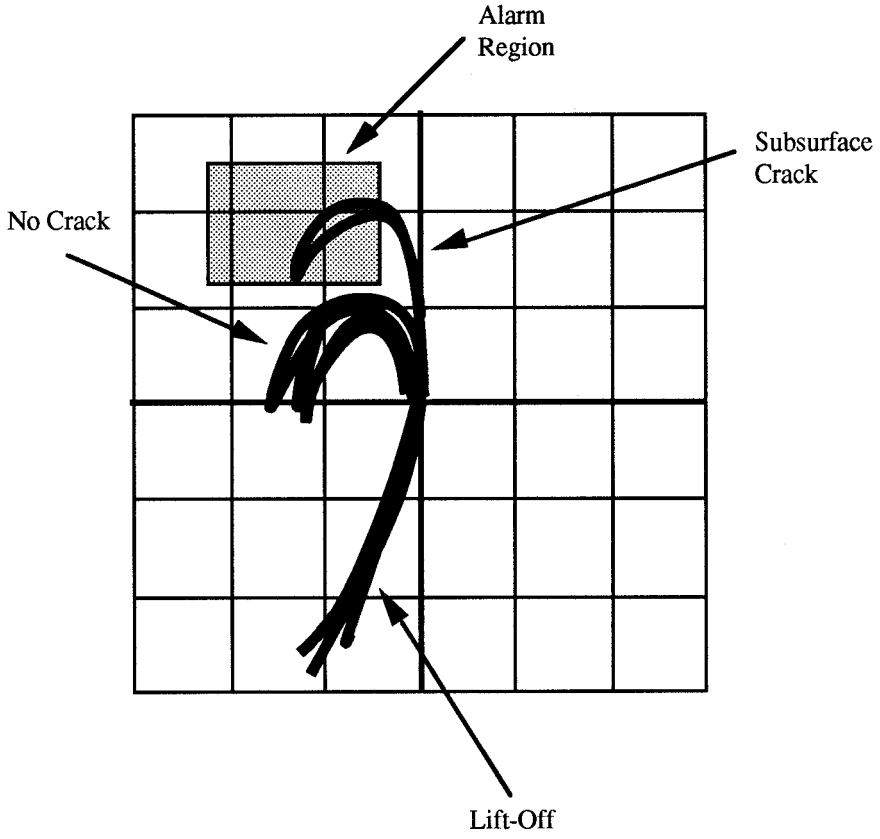

FIGURE 41. ALARM REGION ON AN IMPEDANCE-PLANE DISPLAY

As mentioned previously, during the first phase of system development, the only data analysis functions available to operators are those features found in commercial eddy current systems. For example, to aid operators in identifying abnormal signals, manufacturers of most eddy current instruments provide features which allow operators to set alarm regions. The SmartEDDY 3.0 eddy current software package used as part of the robotic inspection system allows inspectors to

set such thresholds. As described previously in the Calibration section, to calibrate eddy current systems, inspectors deploy an eddy current sensor on a calibration standard and set the eddy current system's parameters to produce a clear separation between signals produced by fasteners without flaws and those produced by fasteners with flaws. Inspectors can also define a rectangular area on the eddy current system's screen which will produce an audible and/or visual alarm if the impedance-plane signal enters this region. A drawing depicting this situation is shown in figure 41. In practice, these alarm features are seldom used during inspections; the oscilloscope traces provide better qualitative information for the operators to make intelligent decisions.

The SmartEDDY 3.0 software also has a dual frequency feature that allows one probe to be run simultaneously at two different frequencies, allowing the system to acquire data at two different frequencies during the same scan. In the robotic system, this feature is used to look for both surface and subsurface cracks during a scan.

SYSTEM PERFORMANCE.

The time that it takes to complete one scan and the time that it takes to inspect a line of fasteners are two good parameters that help to define the inspection speed of the robot. During this phase, the scanning speed was measured, but because of the need for manual intervention in the alignment motion, the time required to automatically inspect a line of fasteners could not be quantitatively defined; this will be deferred until the next development phase.

Manual inspectors move a reflectance eddy current sensor across a line of fasteners at an average rate of 2.4 inches per second (6 cm/sec.). This number was acquired by having an NDI supervisor time eddy current inspections as they were performed at the USAir facilities in Pittsburgh, Pennsylvania, and by averaging the results. Although this is not an absolute number, it is a fairly good estimate of the manual-scanning rate needed for a rough comparison to the automated scanning speeds of the robot.

The robot's scanning rate is variable and can be set using the operator interface. During initial testing, the robot was able to move the sensor at 5 inches per second (13 cm/sec) and still produce high-quality traces on the PC monitor. This rate is considerably higher than the rate at which inspectors move the same sensors. However, this is not the upper limit for the scanning speed. The linear motors which control the rate of scanning have a limit of 100 inches per second (2.5 m/sec), and the SmartEDDY 3.0 can sample at a rate of approximately 3,600 data points per second. During the next phase, the upper limit for the scanning speed will be experimentally determined. Thus, the scanning rate for the automated system is faster than that for manually- deployed sensors.

CONCLUSIONS

- No limitations were observed with respect to the ability of the robot to adhere to surfaces, regardless of the orientations of those surfaces.
- The design of the robot satisfied the mobility and manipulation requirements of the skin inspection application.
- Vacuum pumps that require one half of the air flow needed by those on the prototype could be substituted. The reduced-flow vacuum pumps require less air than those currently used, yet they are just as competent in keeping up with the leak rates commonly found on aircraft surfaces.
- The robot's weight must be reduced in the next phase of the project. The robot in its present form is uncomfortable to lift and position on the fuselage.
- A large error accumulated while the system walked due to excessive compliance in the initial prototype of the mechanical device. The structure must be made more rigid in the next phase of the project.
- The eddy current traces that appeared on the PC monitor when the robot deployed the eddy current sensor were identical to those from manually deployed eddy current sensors.
- The device will need a minimum of four cameras (two for alignment, one for close-up inspection, and one for long-range vision) to give the necessary images for visual inspection, obstacle avoidance, spine alignment, and robot evaluation and navigation.
- Calibration techniques similar to those used for calibrating manually-deployed eddy current sensors are effective for calibrating robotically-deployed eddy current sensors.
- A PC-based control system is sufficient to control the robot's motions.
- The automated system completes a single scan faster than the average human inspector does. However, the upper limit for the scanning speed has not yet been determined. During the next phase of the project, the maximum scanning speed will be experimentally determined.

REFERENCES

1. Carnegie Mellon University, "Feasibility of Navigation (Guidance) of a Measurement Unit Over the Surface of an Aircraft," Final Report for Federal Aviation Administration, March 1992.

2. S. N. Bobo, "Magneto-Optic Imaging Inspection of Selected Corrosion Specimens," Federal Aviation Administration Technical Note, Document Number DOT/FAA/CT-TN92/20, July 1992.

3. S. N. Bobo, "Shearographic Inspection of a Boeing 737," Federal Aviation Administration Technical Note, Document Number DOT/FAA/CT-TN92/19, July 1992.

***U.S. GOVERNMENT PRINTING OFFICE:** 1994-504-078-00102