TN
95/
178

technical note

Performance of Improved Aerosol Cans Subjected to an Aircraft Fire

Christopher Hawthorne
David Blake

December 1995

DOT/FAA/AR-TN95/78

FEDERAL AVIATION ADMINISTRATION
8 1997
TECHNICAL CENTER
LIBRARY

Document is on file at the Technical Center Library,
Atlantic City International Airport, NJ 08405

U.S. Department of Transportation
Federal Aviation Administration

Technical Center
Atlantic City International Airport, NJ 08405

NOTICE

This document is disseminated under the sponsorship of the U.S. Department of Transportation in the interest of information exchange. The United States Government assumes no liability for the contents or use thereof. The United States Government does not endorse products or manufacturers. Trade or manufacturer's names appear herein solely because they are considered essential to the objective of this report.

DOT/FAA
CT-TN
95/78
c. 1

Hawthorne, Christopher
Perfromance of improved
aerosol cans subjected to
an aircraft fire

FAA
TECHNICAL CENTER
Atlantic City, N.J.

Technical Report Documentation Page

1. Report No.	2. Government Accession No.	3. Recipient's Catalog No.
DOT/FAA/AR-TN95/78		

4. Title and Subtitle	5. Report Date
PERFORMANCE OF IMPROVED AEROSOL CANS SUBJECTED TO AN AIRCRAFT FIRE	December 1995
	6. Performing Organization Code AAR-422
7. Author(s) Christopher Hawthorne, David Blake	8. Performing Organization Report No. DOT/FAA/AR-TN95/78
9. Performing Organization Name and Address Airport and Aircraft Safety Research and Development Division FAA Technical Center Atlantic City International Airport, NJ 08405	10. Work Unit No. (TRAIS)
	11. Contract or Grant No.
12. Sponsoring Agency Name and Address U.S. Department of Transportation Federal Aviation Administration Office of Aviation Research Washington, D.C. 20591	13. Type of Report and Period Covered Technical Report
	14. Sponsoring Agency Code

15. Supplementary Notes

16. Abstract

This study was undertaken following the completion of a Small Business Innovation Research (SBIR) Phase 2 contract involving the fire hazards of aerosol cans. Tests were conducted on a newly designed aerosol can developed during the SBIR Phase 2 contract as well as two types of currently produced cans. The purpose was to compare the hazards associated with typical aerosol cans versus the newly designed can when they are involved in an aircraft fire. The testing determined that the new can created the least hazard when involved in aircraft fire scenarios.

17. Key Words	18. Distribution Statement
Hydrocarbon propellant, Aerosol, Rim venting	This document is on file at the Technical Center Library, Atlantic City International Airport, NJ 08405

19. Security Classif. (of this report)	20. Security Classif. (of this page)	21. No. of Pages	22. Price
Unclassified	Unclassified	13	

Form DOT F1700.7 (8-72) Reproduction of completed page authorized

TABLE OF CONTENTS

		Page
EXECUTIVE SUMMARY		v
1.	PURPOSE	1
2.	BACKGROUND	1
3.	TEST DESCRIPTION	2
4.	INITIAL TEST RESULTS	2
	4.1 Nonventing Can Tests	2
	4.2 MEI Can Tests	3
	4.3 Rim Vent Release Cans (RVR)	3
	4.4 Suitcase Test Results	4
5.	CONCLUSIONS	4
6.	REFERENCES	4

LIST OF FIGURES

Figure		Page
1	Can Holder and Can	5
2	LD-3 Container	6

LIST OF TABLES

Table		Page
1	Cargo Container Test Results	7

EXECUTIVE SUMMARY

This study was undertaken following the completion of a SBIR Phase 2 contract involving the fire hazards of aerosol cans. The propellant used in the vast majority of aerosol cans is a mixture of propane, butane, and isobutane. When exposed to the heat of a fire, these cans burst violently and the contents ignite into a large fireball. A new can design was developed under the SBIR contract that withstands higher internal pressures and also vents the contents in a controlled manner when the can buckles. The testing compared the performance of the new can with conventional aerosol cans when exposed to two aircraft fire scenarios. The time, method, and severity of the can's failures were recorded. The testing determined that the new can created the least hazard of the three types tested.

1. PURPOSE.

The purpose of this project was to determine the hazards from three different aerosol can designs when exposed to a fire on an airplane. The three designs were the typical nonventing can, the rim vent release (RVR) can, and a welded seam venting can. The welded seam venting can is a new design developed by Materials Engineering, Inc. (MEI) under a Small Business Innovation Research (SBIR) Phase II contract. The two main factors used to determine the effectiveness of the cans were the time to failure and the severity of the fire or explosion after failure.

2. BACKGROUND.

Due to the ozone depletion potential of chlorofluorocarbons (CFC), industry, in 1979, started to replace the CFC propellant used in aerosol cans with combinations of butane, propane, and isobutane. Although these flammable gases are not normally permitted on passenger flights, Title 49 Code of Federal Regulations provides an exception by allowing each passenger to carry up to 75 ounces of medicinal items, toilet items, and aerosols in checked baggage. Previous tests have shown that when typical nonventing aerosol cans are exposed to a fire they violently explode and their contents ignite. This greatly increases the severity of the original fire. These cans pose a serious hazard on aircraft in the event of a fire in a cargo compartment.[1]

Most aerosol cans now manufactured are required to pass a DOT standard consisting of a 130 degree Fahrenheit water bath to ensure the cans have sufficient strength to prevent them from bursting in normal situations. The products in some cans, such as whipped cream, cannot be exposed to this temperature, and there currently exists an alternative safety feature known as a rim vent release (RVR) which is used in lieu of the water bath test for these types of products. This RVR can has twelve sets of three notch scores on the top rim of the can. When these cans are heated, the internal pressure rises and eventually the top dome buckles and the scores open and release the contents in a relatively controlled manner. According to studies done by Materials Engineering, Inc.[2] however, these cans have a drawback in that they may vent at pressures between 200–230 psi. NFPA 30B, Code for the Manufacturing and Storage of Aerosol Products, 1990 edition, states in section 4-1.7, 'Level 2 and 3 aerosol products whose containers are designed to vent at pressures less then 210 psig shall not be stored.'[3]. The classifications of Level 1, 2, and 3 aerosol products are based on the percentage of flammable material in the base product and the percentage of flammable propellant. This information can be found in NFPA 30B table 1-7.

The new aerosol can (MEI can) designed under the SBIR contract has welded seams as opposed to the crimped seams in currently produced cans. This allows for much higher internal pressures before failure. In addition, notches are cut into the top of the can to allow a controlled release of the contents at a rate slower than the RVR can design. In tests performed by Materials Engineering, Inc., these cans took longer to fail then the cans with no venting device.

3. TEST DESCRIPTION.

The tests were conducted to determine how the three types of aerosol can designs would perform when exposed to a fire. The cans that were tested used a combination of propane, butane, and isobutane as the propellant and were filled with a mixture of isopropyl alcohol and water to simulate the product. In the initial series of tests, the cans were wired to a pan of alcohol (see figure 1), and then placed into an LD-3 cargo container (see figure 2). The alcohol was ignited using a transformer and electrodes. Video and high-speed photography were taken of the tests, and the times of the cans failures were recorded. The video and photography were also used to capture the severity of the failures.

Following these initial tests, the cans were tested in a more realistic fire environment in the cargo compartment of an aircraft. Two of each type of can were placed in a suitcase full of rags to simulate passenger luggage. The contents of the suitcase was ignited by energizing a coil of nichrome wire placed inside. A small quantity of alcohol was poured onto the rags to insure ignition. The severity of the failure of the cans and the time of each failure were used to compare the three different cans designs.

4. INITIAL TEST RESULTS.

The test results for nonventing cans, MEI cans, and rim vent release cans are summarized in table 1.

4.1 NONVENTING CAN TESTS.

Test 1 — The first can was not wired onto the pan and after the can buckled, it fell into the fire pan. Therefore the results from this test were discarded.

Test 2 — During this test, as well as every other test in this series, the can was wired to the pan so that it could not move. The can buckled at 2:20 (minutes:seconds) after the fire was started, and it violently exploded at 3:37. The can buckles because the rise in internal pressure forces the top dome and bottom cap to bulge outward. In this test, the fire was put out by the release of the contents of the can when it failed.

Test 3 — This test was almost identical to test 2. This time, however, the released contents ignited into a fireball. The times were 2:21 for can buckling and 3:42 for the can explosion.

Test 4 — In this test, the container had to be moved to facilitate the film crew. This movement caused the wind to become a factor and delayed the times to 2:40 for buckling and 4:13 for bursting. The contents again ignited into a fireball, burning the inside of the container along with the wires used for the ignition device.

Test 5 — After blocking the wind from entering the container, test 5 was performed. Test 5 results were consistent with tests 2 and 3. Buckling occurred at 2:12 and bursting at 3:32. The contents again produced a large fireball.

4.2 MEI CAN TESTS.

Test 6 — In this test, the can buckled at the bottom and at the top. The bottom buckled first at 1:37, and the top buckled at 3:00. The can failed and vented at 5:26. The can vented with enough energy to cause it to break free of the wire holding it onto the pan and bounce around the inside of the container. The escaping contents ignited and then self-extinguished several times.

Test 7 — When the can first buckled during this test, it broke free of the wire securing it and fell off the pan.

Test 8 — The can was better secured to the pan for this test. The bottom of the can buckled at 1:22 and the top at 2:30. The can vented at 4:44, and the contents were released into the air. The contents ignited, turning the spray into a torch. The torching effect lasted almost ten seconds and extended approximately 3 feet.

Test 9 — The results of this test were similar to that of test 8. The times for top and bottom buckling and venting were 1:25, 2:24, and 4:12 respectively. Once again, the vented contents turned into a torch-like flame that reached the top of the container.

Test 10 — The results of this test were very close to those of the previous two tests. The contents caught fire and the times for the bottom and top buckling along with venting were 1:32, 2:30 and 4:35 respectively.

Test 11 — Tests 11 through 14 were conducted on a different day than the previous ones. It was much windier than previously, which may have been the cause for the differing times. Test 11 had times for top and bottom buckle and venting of 1:50, 3:00, and 4:14 respectively. The contents did not ignite during this test.

Test 12 — Wind was considered a factor in test 11, and in the rest of the tests, the wind was blocked as much as possible. The times for this test were 1:14, 2:18, and 3:55. The contents caught fire briefly then self-extinguished. The remaining contents continued to vent without igniting.

Test 13 — Test 13 was also very similar to the previous two tests with times of 1:26, 2:28, and 4:07. The contents did ignite and had the torch effect that was seen in the previous tests.

Test 14 — Test 14 was captured on high-speed film. The times for the buckling and venting were 1:28, 2:24, and 4:08. The contents of the can did not ignite during this test.

4.3 RIM VENT RELEASE CANS (RVR).

Test 15 — Because these test cans were larger then the previous two types of cans, a larger pan was constructed. The first can buckled and vented at 1:10. When the can vented, the contents were released from all twelve "triple scores," in several directions. The contents were then ignited by the fire forming a large fireball that continued burning until the can was empty.

Tests 16 through 19 — The times the cans vented for these tests were 1:14, 1:59, 1:42, and 1:25 respectively. The contents ignited in all cases, forming a fireball inside the container that continued until the cans were empty.

Tests 20 and 21 — For these two tests the cans were conditioned in a refrigerator prior to testing. The cans vented during these tests at 1:43 and 1:42 respectively. This indicated that ambient temperatures could account for some of the variability in the can venting times of previous tests. The contents, like the previous five tests, ignited into a fireball.

4.4 SUITCASE TEST RESULTS.

MEI Cans — The two MEI cans failed at 12:00 and 22:00. The fire had burned through the wall of the suitcase before the cans failed. When each of the cans failed, the contents vented and ignited. The torch like effect that formed extended about two to three feet above the suitcase and lasted approximately three to five seconds.

Nonventing Cans — The two nonventing cans failed at 2:20 and 3:25. When these cans failed, they violently exploded and the contents ignited forming a large fireball.

RVR Cans — The Rim Vent Release cans buckled and vented at 2:54 and 3:12. No torching was observed but the size of the fire increased dramatically while the contents were venting.

5. CONCLUSIONS.

1. The nonventing cans created the most severe hazards of the three types tested. These cans failed earlier than the MEI cans and produced a much larger fireball and overpressure at failure than both the MEI cans and the RVR cans. The results of these tests were similar to the results reported in reference 1.

2. The RVR can failed, by design, much earlier than the other two types of cans. In every case, the released contents ignited and produced a large fire which was sustained until the cans were empty.

3. The MEI created the least hazard when it failed and also was exposed to the fires for the longest time before failure occurred.

6. REFERENCES.

1. Blake, David R., Fire Hazards of Aerosol Cans in Aircraft Cargo Compartments, FAA Technical Center Report No. DOT/FAA/CT-89/32, December 1989.

2. Daehn, Ralph C., Final Project Summary Report: Improved Aerosol Can, DOT Contract DTRS-57-91-C-00140, April 1994.

3. National Fire Protection Society, National Fire Codes, 1992.

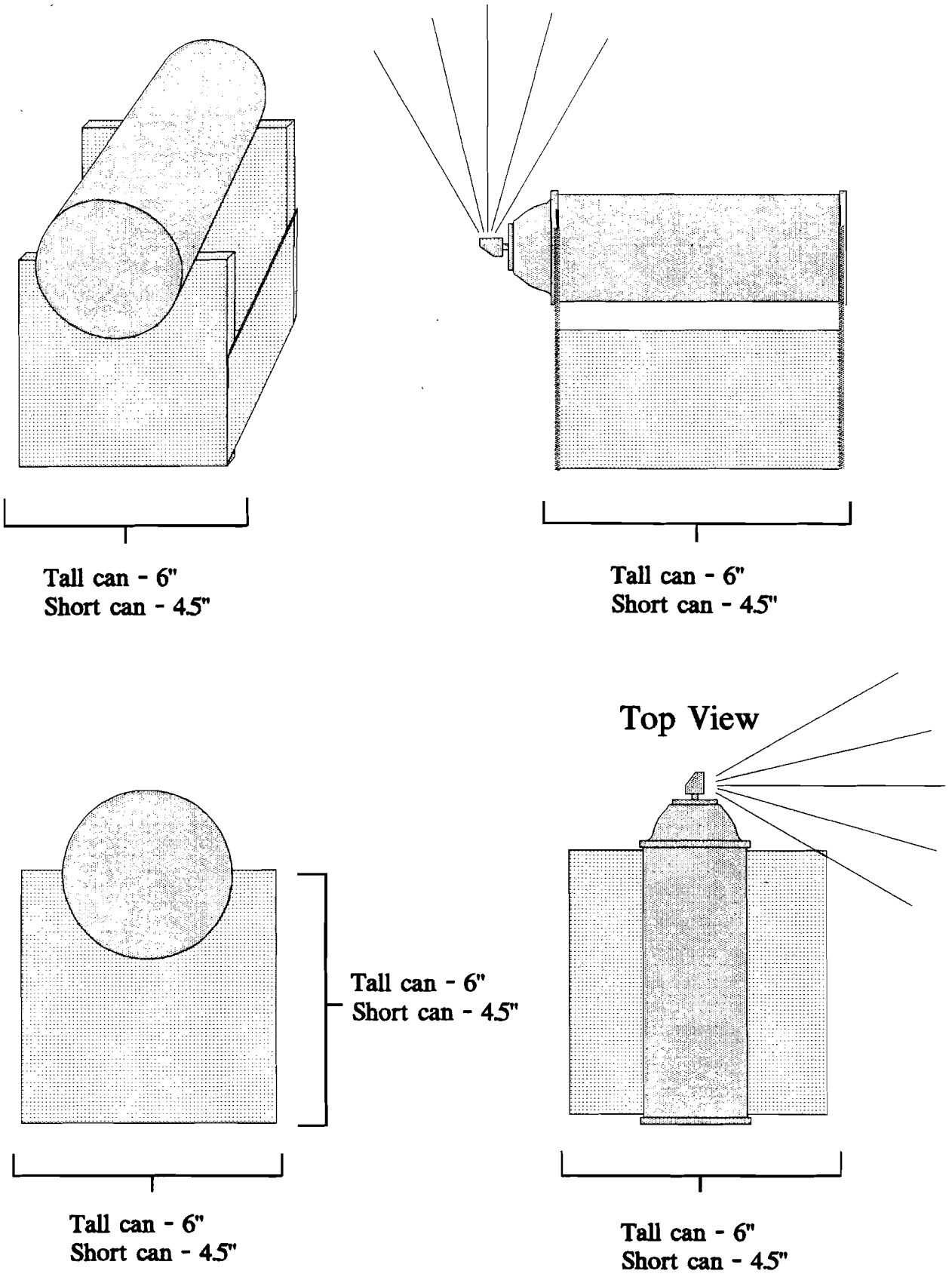

FIGURE 1. CAN HOLDER AND CAN

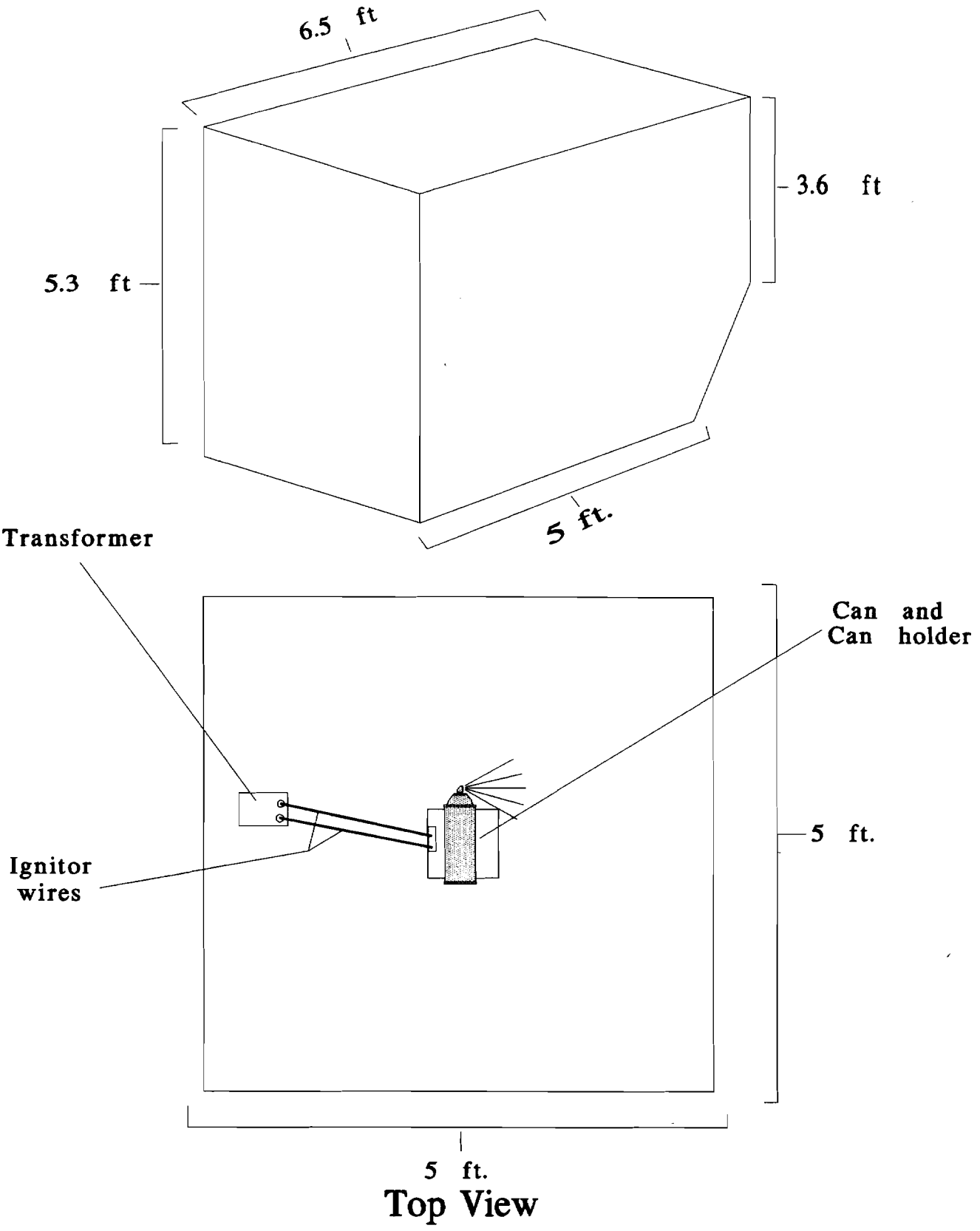

FIGURE 2. LD-3 CONTAINER

TABLE 1. CARGO CONTAINER TEST RESULTS

Test #	Can type	Time of failure	Type of failure
1	Nonventing		Can fell off stand
2	Nonventing	3:37	Can violently exploded, but no fire
3	Nonventing	3:42	Can violently exploded into a fireball
4	Nonventing	4:13	Can violently exploded into a fireball
5	Nonventing	3:32	Can violently exploded into a fireball
6	MEI can	5:26	Can vented contents
7	MEI can		Can fell off holder before failure
8	MEI can	4:44	Vented contents ignited forming torch
9	MEI can	4:12	Vented contents ignited forming torch
10	MEI can	4:35	Vented contents ignited forming torch
11	MEI can	4:14	Vented contents did not ignite
12	MEI can	3:55	Contents briefly ignited
13	MEI can	4:07	Vented contents ignited forming torch
14	MEI can	4:08	Vented contents did not ignite
15	RVR can	1:10	Vented contents ignited into a fireball
16	RVR can	1:14	Vented contents ignited into a fireball
17	RVR can	1:59	Vented contents ignited into a fireball
18	RVR can	1:42	Vented contents ignited into a fireball
19	RVR can	1:25	Vented contents ignited into a fireball
20	RVR can	1:43	Vented contents ignited into a fireball
21	RVR can	1:42	Vented contents ignited into a fireball