Technical Report Documentation Page

1. Report No.	2. Government Accession No.	3. Recipient's Catalog No.
FHWA/TX-95/1392-6		

4. Title and Subtitle	5. Report Date
DETECTOR LOCATION FOR COMPUTERIZED ARTERIAL STREET SAMPLING DETECTORS	February 1995
	6. Performing Organization Code
7. Author(s)	8. Performing Organization Report No.
Donald L. Woods and Neilon J. Rowan	Research Report 1392-6
9. Performing Organization Name and Address	10. Work Unit No.
Texas Transportation Institute The Texas A&M University System College Station, Texas 77843	11. Contract or Grant No. Study No. 0-1392
12. Sponsoring Agency Name and Address	13. Type of Report and Period Covered
Texas Department of Transportation Research & Technology Transfer Office P.O. Box 5080 Austin, TX 78763-5080	Interim: September 1993 - August 1994
	14. Sponsoring Agency Code

15. Supplementary Notes

Research performed in cooperation with the Texas Department of Transportation and the U.S. Department of Transportation, Federal Highway Administration.
Research Study Title: Effective Detector Placement for Computerized Traffic Management

16. Abstract

This report provides a systematic method of identifying and evaluating sites for arterial street sampling detectors to compliment computerized traffic control on arterial streets. The research literature failed to identify significant written documents on the locations of arterial detectors. Contacts with several signal manufacturers and many engineers who have designed computerized signal systems produced no consistent method for detector location. One of the most significant findings is that the cost of detailed volume counts and correlation with downstream traffic problems commonly exceeds the cost of installing detectors at all tentative locations. The data collection and correlation can then be accomplished using the system.

Recommended average sampling detector spacing is 800 meters (one-half mile) along the controlled arterial street.

17. Key Words	18. Distribution Statement
Computerized Signal Systems, Sampling Detectors, Detector Location	No Restrictions: This document is available to the public through NTIS: National Technical Information Service 5285 Port Royal Road Springfield, Virginia 22161

19. Security Classif. (of this report)	20. Security Classif. (of this page)	21. No. of Pages	22. Price
Unclassified	Unclassified	28	

Reproduction of completed page authorized

Form DOT F 1700.7 (8-72)

DETECTOR LOCATION FOR COMPUTERIZED ARTERIAL STREET SAMPLING DETECTORS

by

Donald L. Woods, P.E.
Research Engineer
Texas Transportation Institute

and

Neilon J. Rowan, P.E.
Research Engineer
Texas Transportation Institute

Research Report 1392-6
Research Study Number 0-1392
Research Study Title: Effective Detector Placement for Computerized Traffic Management

Sponsored by the
Texas Department of Transportation
In Cooperation with
U.S. Department of Transportation
Federal Highway Administration

February 1995

TEXAS TRANSPORTATION INSTITUTE
The Texas A&M University System
College Station, TX 77843-3135

IMPLEMENTATION STATEMENT

The methods in this report can be immediately applied in the location of sampling detectors for a computerized traffic control system for arterial street traffic management. The procedure is systematic and based on the information received from systems manufacturers and practicing engineers.

DISCLAIMER

The contents of this report reflect the views of the authors who are responsible for the facts and the accuracy of the data presented herein. The contents do not necessarily reflect the official views of the Texas Department of Transportation or the Federal Highway Administration. This report does not constitute a standard, specification or regulation, nor is it intended for construction, bidding or permit purposes. Dr. Donald L. Woods (P.E. 21315) was Principal Investigator for this project.

ACKNOWLEDGEMENTS

The authors wish to express their appreciation to Eagle Signal Company, Traffic Engineers, Inc., Mr. Roy Wilshire and the City of Los Angeles, California who provided valuable insight into the problem of locating sampling detectors for arterial street computerized traffic signal system operation which is the basis of this report.

TABLE OF CONTENTS

	Page
LIST OF FIGURES	x
LIST OF ABBREVIATIONS AND SYMBOLS	xi
SUMMARY	xiii
1. OVERVIEW	1
Introduction	1
Objective	1
Background	2
2. ARTERIAL STREET SYSTEM DETECTOR LOCATION GUIDELINES	3
Special Conditions to Avoid	9
Special Detector Locations	9
Closure-Detector Location	9
Detector Operation	10
3. FINDINGS AND RECOMMENDATIONS	13

LIST OF FIGURES

FIGURE **Page**

1. Flow Chart to Identify Strategic Locations for Placing Detectors 6
2. Location of Detectors Upstream from Intersections 8
3. Recommended Detector Location Downstream From A Signalized Intersection 8
4. Illustration of Detector Placement Near Driveways 9
5. Relationship of Loop Detector Occupancy and Operating Speed 10

LIST OF ABBREVIATIONS AND SYMBOLS

MOE	Measure of Effectiveness
X	Acceleration distance from a signalized intersection

SUMMARY

This report provides guidelines for the selection and evaluation of potential sampling detector sites for arterial street computerized traffic signal systems. The basic spacing guideline suggests that detectors be spaced at 800 meters (one-half mile) and at all high volume driveways or intersections. The survey of manufacturers and practicing engineers did not identify any consistent guidelines for the placement of sampling detectors. There was a general expression that a spacing of about 1600 meters (one-mile) was about optimal for tentative sites. It was also reported that the cost of conducting detailed volume counts and correlation of these data with downstream traffic problems is greater than the cost of installing loops/detectors at all candidate detector locations. This practice also provides backup for detector failures. The location guidelines reflect this cost factor.

A flow chart is provided which allows the user to quickly evaluate the quality of potential sampling detector locations to determine if they are functional.

1. OVERVIEW

INTRODUCTION

A traffic surveillance system is commonly characterized by its use of traffic sensors to collect necessary data, a transmission network to transmit the data to a central data bank, and a digital computer system with peripheral devices to analyze the data and provide information for the management decision process. Arterial streets are the major traffic facilities of concern, and traffic surveillance and control on arterial streets reduces congestion. Placing detectors at strategic locations along the arterial streets assists in the decisions to balance demand with capacity at congested locations.

A number of research projects related to incident detection and location of detectors in freeway management have been conducted and published. However, very limited research has been conducted toward the application of detection systems in computerized signal systems on arterial streets. This lack of research can perhaps be attributed to the characteristic differences between freeways and arterials. Freeways are expected to flow efficiently even in peak periods, and management of the freeway system should strive for great economic returns. Freeways generally have limited access points, reduced median and marginal friction, fewer geometric constraints, and a more homogeneous mix of traffic than arterial streets. On the other hand, arterials have signals, access , and other limiting friction factors that produce an ambient level of stoppage and congestion. Arterial traffic is interrupted by traffic signals, and a high degree of uncertainty is associated with operational problems of traffic detection on arterial streets. These marked differences between freeway and arterial street operations limit the potential for applying existing freeway detection techniques to arterial streets.

The two basic measurement variables, volume and occupancy, are used for traffic control and management of the arterial street system. Volume can be easily and accurately obtained by counting the number of pulses measured during a given time period. Occupancy is the percent of time that a detector is indicating the presence of a vehicle. Research has indicated that an occupancy level of more than 25 percent is an indication of the onset of congestion. The objective of the detector system is to provide input for the adjustment of the signal timing to reflect the upstream changes in major traffic flow. System detectors are strategically placed at mid-block locations in an effort to increase the efficiency of progression along arterial streets. The control parameters can be computed by a master supervisory station by using the inbound and outbound traffic flow data. Detection on cross-street approaches and high volume driveways are similar to those for normally operated local intersection control. The arterial master controller selects the best timing plan based on the traffic patterns as measured by the arterial street sampling detection system.

OBJECTIVE

The objective of this study was to identify the general location of sampling detectors on

arterial streets, and to recommend guidelines that would assist the practitioner in evaluating the appropriateness of each selected sampling location. In operating an arterial system, it is important to identify strategic traffic generating locations on arterial streets where placement of sampling detectors would be helpful in operating the system. These detectors measure the changes in traffic volume entering from cross streets and driveways located along the arterial street. The detection system provides data that are useful in relieving the operational problems. This is accomplished by reducing detection time and providing information to the system operator to take timely and necessary traffic management actions. This reduces congestion on the arterial street by reducing delay and fuel consumption. It also increases the operating speed along the arterial street.

BACKGROUND

Very limited research has been conducted and published on detector application and location of system detectors on arterial streets. A literature search was conducted, and very limited material was found on placing detectors on arterial streets. Many traffic engineering professionals were contacted and asked for their expertise in this field. None of them were able to provide any suggestions or guidance relevant to this topic. With this limited background, this study was restricted to the concepts and ideas that were developed based on the available literature and consideration of the operational problems that may exist on arterial streets.

2. ARTERIAL STREET SYSTEM DETECTOR LOCATION GUIDELINES

A detection point is warranted where there is the potential for major changes in volume to occur or where demand is likely to exceed the capacity of the arterial streets. An efficient detection system will enable the traffic management team to carry out the following tasks:

1. Detect traffic demand changes that will impact the system in the near term.

2. Associate the demand with a particular system operating mode

3. Adjust the system to the revised operational mode.

Detecting traffic demand is a most important and difficult task to perform in the field. Traffic demand can be detected by placement of traffic sensors at selected locations. This is a difficult task because if the demand change is not recognized early, it leads to higher levels of congestion and delay to the traffic not only on that arterial street but also to the traffic on adjacent arterials and freeways. Placing detectors at strategic locations on the arterial street helps identify the changes in traffic demand patterns. If these changes can be correlated with downstream traffic congestion or have already been previously correlated with downstream demands, based on previous counts, the system can be adjusted in advance and the problem at an intersection or street section downstream may be ameliorated.

Figure 1 is a flow chart which is useful in making decisions for an effective traffic management system and identifying the strategic locations for placing detectors. The detector system should identify the existing problem, the location of the problem, classification of the problem, and the severity of the problem. Prompt and reliable identification of the problem enables the system operator to more effectively remedy the causes of congestion. The occurrence of congestion may be recurring and/or sporadic. Recurring congestion conditions include change in volumes at certain time periods of the day or change in cross-sections due to lane closure, roadway construction activities, and at selected high volume driveways entering the arterial street. Recurring congestion occurs on roadways entering the central city where the inbound traffic is heavy in the morning hours and the outbound traffic is heavy during the evening hours of the day. Recurring congestion situations also occur near work places with a large number of employees.

Sporadic congestion situations include unexpected changes in traffic demand at shopping complexes and sudden lane closure due to incidents or maintenance activities. These conditions may occur at any time period of the day and are difficult to detect, assess, and handle.

Location of the system detectors for arterial street signal systems should satisfy the following criteria:

1. The detector system should measure the demand at points where the change in demand has been demonstrated to be a forerunner of a change downstream or locations which have the potential for doing so.

2. The location should be away from the path of turning vehicles and outside the queue space of an intersection.

3. There should be as few detectors as is practical to reduce the computation, but sufficient to measure the major demand changes on the system.

4. Generally, a sampling detector should be placed at an average of about 800 meters (one-half mile) along the coordinated arterial street.

These general requirements are best satisfied at a point downstream from an intersection, and between curb access points.

The site characteristics include:

1. Points of major cross section change,

2. Points up- and down-stream from major generators-
   Employment centers
   Industrial centers
   Major retail centers
   Large educational institutions, and

3. Near intersecting arterial streets.

The following procedure is recommended in selecting system sampling detector locations:

1. Tentatively select sites that have the potential to be sampling detector locations based on the criteria described above. These should average about 800 meters (one-half mile) spacing along the arterial street.

2. Review the sites using the guidelines present in Figure 1, and select those locations where the conditions appear favorable for a good sampling site.

3. When the detectors are operational, continue with steps 4 through 7 below.

4. Using normal traffic counting procedures, count the traffic at the sampling detector locations and at selected points downstream.

5. Correlate the measured flows at the sampling detector locations with the flows downstream allowing for the travel time differences. A minimum of 3 minutes should be allowed for the decision and system timing changes (i.e., detector locations must be at least 3 minutes in advance of the area where the modification is to be made).

6. Identify the sampling detector locations that have a high degree of correlation with downstream flows at least three minutes later (i.e., it takes two to three minutes to change operating modes in the system). When two or more tentative sampling detectors are equally correlated with the flows downstream, only one should be used.

7. Sampling detectors not highly correlated with down stream traffic and other overly redundant detectors should be turned off electronically.

The person selecting and designing the sampling detector sites should understand that it is not necessary to have detection across all lanes in all cases. Indeed, detection in only one or two lanes will serve the needs well in many cases and provide the desirable degree of redundant detection coverage.

The procedure suggested above appears, on the surface, to be wasteful as more detectors are actually installed than are used by the control system. Discussions with operating agencies consistently brought out the point that it is more costly to conduct the detailed studies to correlate the upstream traffic changes with the downstream traffic conditions than to install detectors at all feasible locations and do the correlation studies after the system comes on-line. With this perspective in mind, the procedure was modified to reflect the reality. The extra detectors are available as spares when the primary detectors malfunction. Also, the extra detectors may be used for adapting to future traffic changes.

Figure 2 suggests the desirable location of sampling detectors relative to a downstream intersection. If the queue builds up over the detector, the response time of the system is greatly increased. The 95th percentile queue length is suggested as the minimum queue length design value, and the 100th percentile queue length is suggested as the desirable design value.

The sampling detector should be located clear of the turning movements and beyond the acceleration area of an upstream intersection. Figure 3 illustrates the minimum and desirable sampling detector placement distances downstream from a signalized intersection. When a compromise must be made between the queue storage space of a downstream intersection and the acceleration space of an upstream intersection, the compromise should always be on the acceleration space.

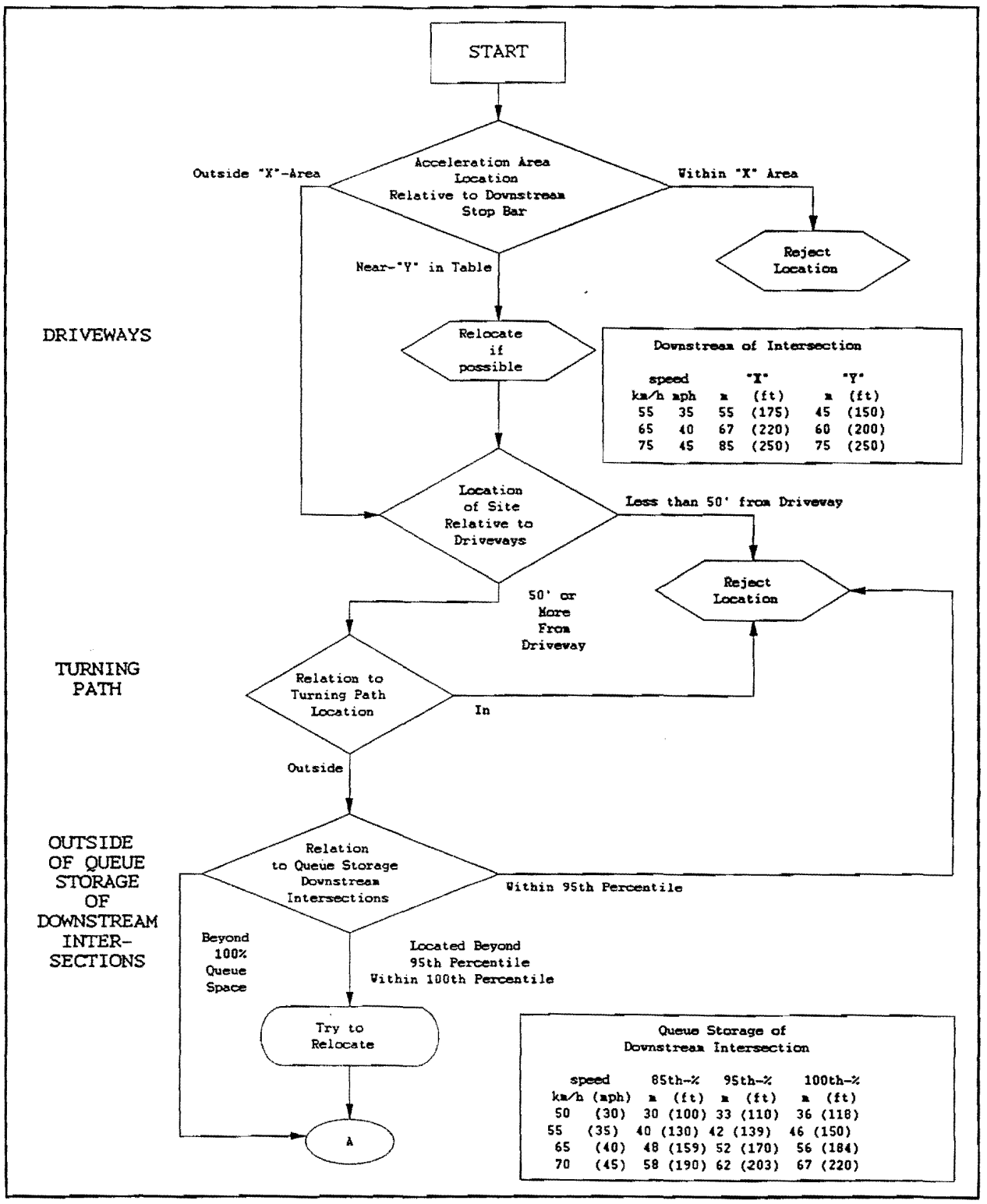

Figure 1. Flow Chart to Identify the Strategic Locations for Placing Detectors.

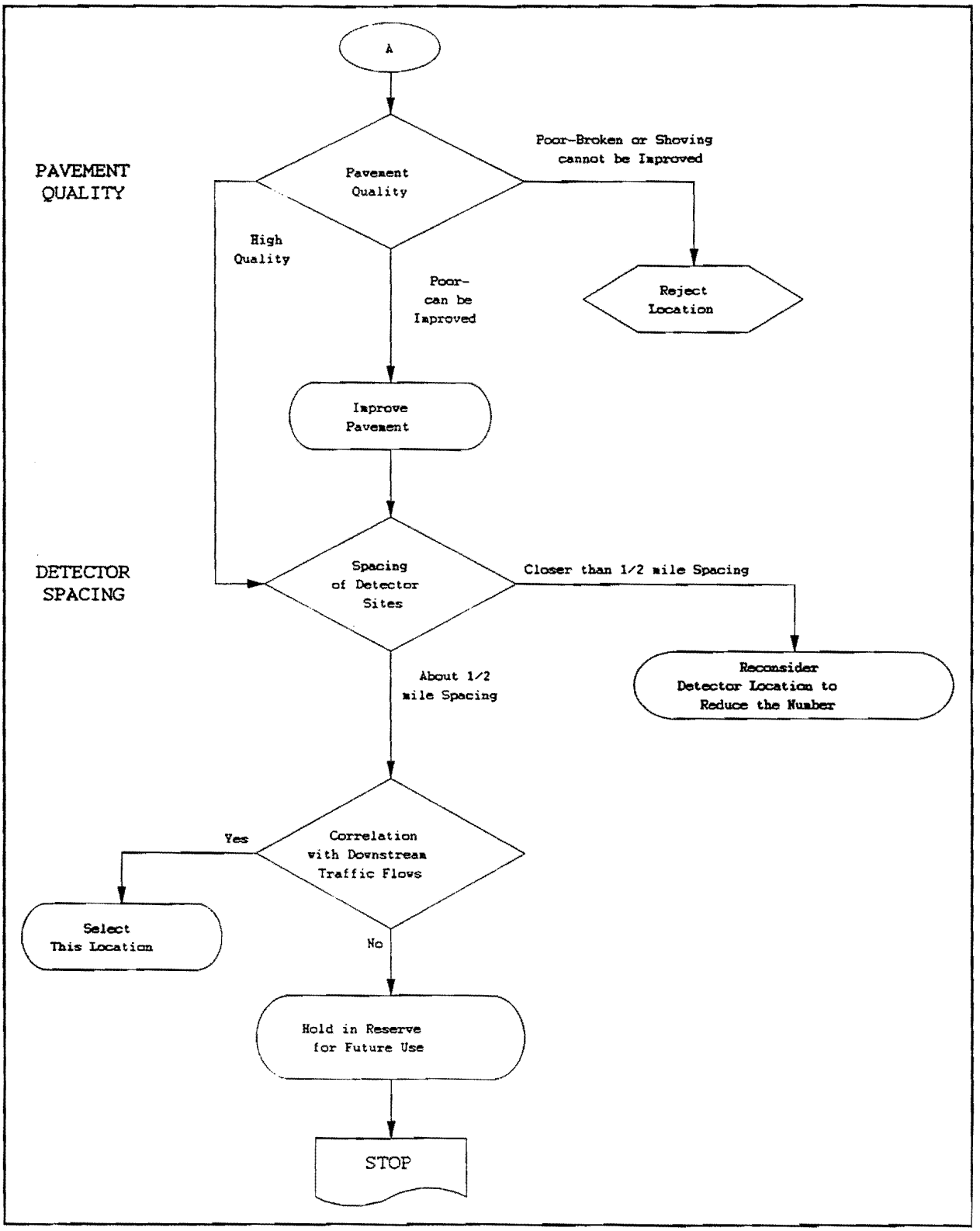

Figure 1. Flow Chart to Identify the Strategic Locations for Placing Detectors. (Continued)

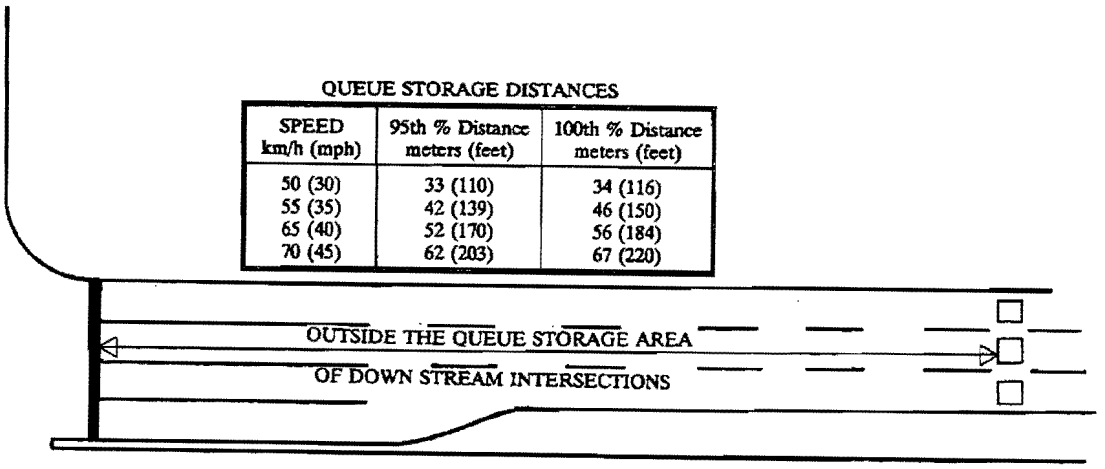

Figure 2. Location of Detectors Upstream from Intersections.

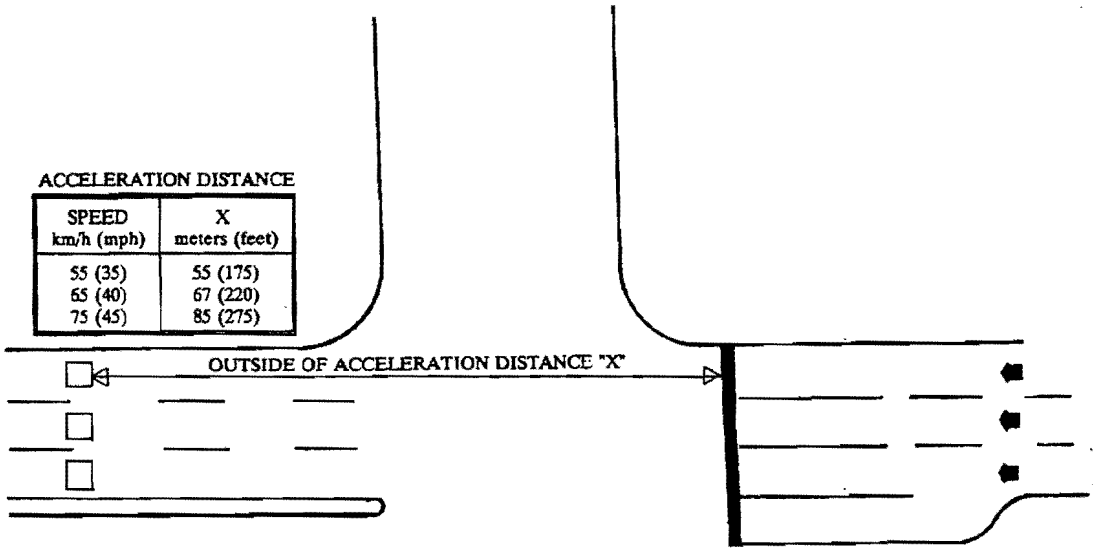

Figure 3. Recommended Detector Location Downstream From A Signalized Intersection.

Figure 4 illustrates the desirable sampling detector location relative to driveways which generate high arterial street traffic volumes. To detect the traffic demand at this location, the detector should be placed at least 15 meters (50 feet) downstream from the driveway. This spacing may be increased depending on the geometric and roadway conditions.

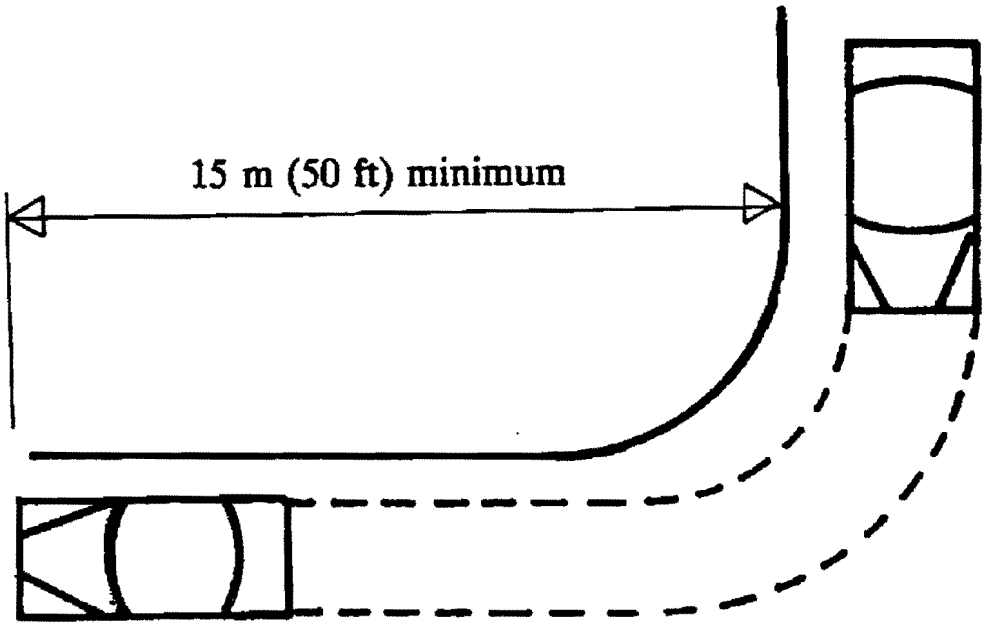

Figure 4. Illustration Of Detector Placement Near Driveways

Special Conditions To Avoid

It should be noted that detectors should not be located within 3.3 meters (10 feet) of any manhole, water valve, or other appurtenance located within the roadway itself. This distance is required to permit sufficient clearance to allow work at these locations without disturbing the detector.

Special Detector Locations

Placing detectors is not limited to these locations on the arterial street system. Observing the traffic in the field and collecting traffic volume data at some selected locations will help in making a decision whether a detector is warranted at other locations. High volume driveways to private or commercial property are candidates for the location of a detector. This is especially true when a site on the arterial street is unsuitable for a detector.

Closure-Detector Location

The information provided here should help traffic control systems management in selecting the most strategic locations for placing detectors along arterial streets. After making a preliminary plan, the system designer should literally walk through each location to make the final selection of

detector locations. This field check should also consider location and access to the intersection controller cabinet, special driveway problems, pavement conditions, and manhole locations.

System detectors located according to these guidelines will provide the traffic control software with the most factual information about current, on-street traffic demand patterns. This information is useful in selecting the timing patterns (traffic responsive plan selection), providing input to on-line optimization techniques (adaptive control strategies), and providing input for local intersection optimization (critical intersection control).

Detector Operation

After the detectors used in an arterial street traffic control system are located, it is necessary to decide whether the detectors are to operate in the pulse or presence mode. This is usually based on the decision variables to be used: either density or flow rate. Density, or loop occupancy, is a reasonable measure, and is particularly advantageous when traffic over the sampling detector location approaches saturation flow. Flow rate will also serve well at most sampling detector locations, particularly for operation below saturated flow conditions.

If occupancy is used as the measure of effectiveness (MOE), then the detector must be operated in the presence mode. Figure 5 illustrates the relationship between detector occupancy and speed.

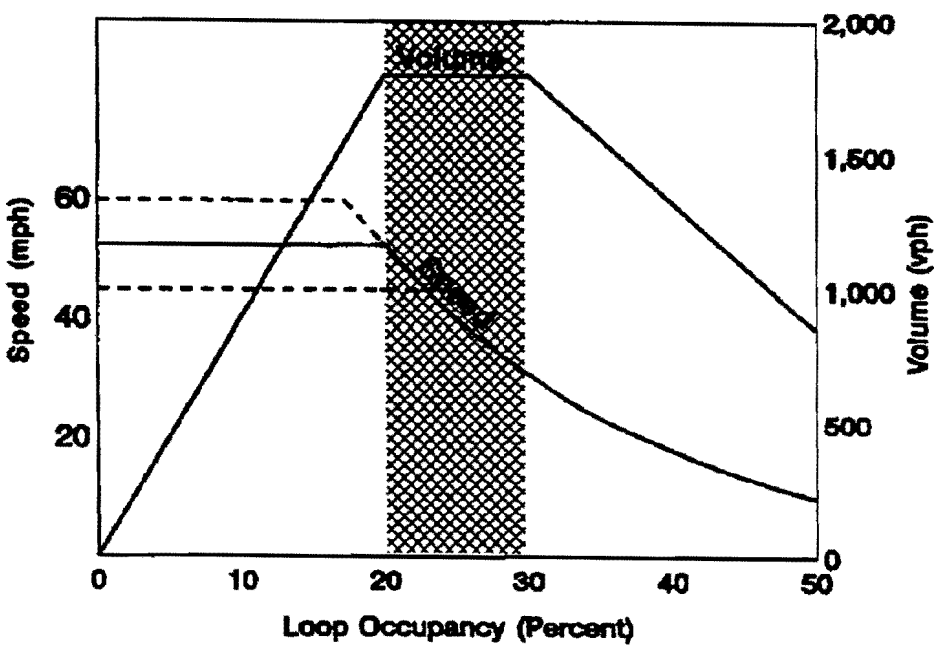

Figure 5. Relationship of Loop Detector Occupancy and Operating Speed

Occupancy as the measure of effectiveness is sensitive to changes in congestion for occupancy values below 20 percent. When the occupancy level exceeds 20 percent, speed changes very little as the occupancy percentage increases. This property renders occupancy an insensitive measure of effectiveness in the most critical range of observations which are to be used to address changes in future downstream congestion. For this reason, flow rate, or traffic counts per unit of time is the recommended MOE.

The choice of flow rate for a particular unit of time as indicated by the MOE, usually dictates that the pulse mode of detector operation be used. Use of the pulse mode eliminates the potential problem of vehicles stopping over the detector. Pulse mode has proven the most reliable mode for counting traffic volumes.

3. FINDINGS AND RECOMMENDATIONS

This study failed to uncover significant findings from previous research on the placement of sampling detectors for computerized traffic control systems on arterial streets. Based on previous work in this study, and on a rational review of traffic and detector characteristics, four findings of this effort are significant:

1. There is no widely accepted guideline for the selection of sampling detector locations on arterial streets.

2. Traffic patterns tend to change in relatively short distances on an arterial. The detector location must be capable of responding to minimize congestion downstream. An 800 meter (one-half mile) average spacing of sampling detectors is suggested to provide the necessary coverage.

3. The pulse mode of detector operation is recommended for sampling detector operation, because it provides greater accuracy.

4. The cost of field data collection and analysis to select the best detector sites is generally greater than the cost of installing loop detectors at all candidate sites and selectively using them as the data reveals the degree of correlation of traffic flows with downstream locations. Therefore, sites at about 800 meter (one-half mile) intervals should be selected in accordance with the procedure outlined in Figure 1, and loops should be installed. Correlation of site data with downstream congestion may then be done over time to fine-tune the system.