CIVIL AERONAUTICS AUTHORITY

Washington

TECHNICAL DEVELOPMENT

REPORT NO. 4

Reissued as
Technical development report no. 19

THE ALFARO ENGINE

By
K. S. Cullom
Power Plant Section

January - 1939

TABLE OF CONTENTS

	Page
SUMMARY - - - - - - - - - - - - -	1
INTRODUCTION - - - - - - - - - -	2
DESCRIPTION OF ENGINE - - - - -	3
INSTALLATION - - - - - - - - - -	5
DESCRIPTION OF TEST - - - - - -	7
RESULTS AND DISCUSSION - - - -	8
CONCLUSIONS AND RECOMMENDATION	10
LOG SHEETS AND ILLUSTRATIONS -	11

THE ALFARO ENGINE

By

K. S. Cullom
Power Plant Section

SUMMARY

The Alfaro engine built for the Bureau of Air Commerce (now Civil Aeronautics Authority) by Aircraft Development, Inc., Boston, Massachusetts, passed its contract two hour acceptance test on May 16, 1938. This engine was developed to its present stage with the assistance of the Bureau in an attempt to provide a more efficient power plant for commercial aircraft.

The engine is of the crankless or so-called "barrel" type, employing two cam plates which are actuated by double-opposed pistons, and operates on the 2-stroke cycle with fuel injection and spark ignition. The engine built for the Bureau was of the 4-cylinder (eight piston) water-cooled type. The average performance figures for the two hour test are: 113 b.hp. (obs.) at 2030 r.p.m., 132 lb. per sq. in. b.m.e.p. (obs.), and a specific fuel consumption of 0.59 lbs. per b.hp.-hr. The corrected values are 115 b.hp. at 2000 r.p.m. with a b.m.e.p. of 136. The specific dry weight of the engine, including generator and starter, is 2.34 lbs. per b.hp. The frontal diameter is approximately 15½ inches.

The results of the test prove the practicability of the design and indicate that, with further development, there is con-

siderable promise that the Alfaro engine can become a lighter, and more compact aircraft power plant than conventional types. It is recommended that the development of this engine be continued.

INTRODUCTION

In August, 1935, tests were completed with a water-cooled, single cylinder engine of the crankless, 2-stroke cycle, fuel injection, spark ignition, double-opposed piston type designed by Heraclio Alfaro, of Aircraft Development, Inc., of Boston, Massachusetts, and built with the cooperation of the Indian Motorcycle Company of Springfield, Massachusetts.

The tests were conducted at the engine laboratory of the Massachusetts Institute of Technology. The engine was, as far as is known, the first of this type and was made to investigate the possibilities of Mr. Alfaro's design. This single cylinder engine was of 3-3/4 inch bore and 5 inch stroke (111 cu. in. displacement) and developed 80 b.hp. at 2000 r.p.m. on 72 octane fuel. A 9.5:1 compression ratio was used, and the scavenging pressure was $6\frac{1}{2}$ inches Hg. A b.m.e.p. of 145 lb. per sq. in. and a specific fuel consumption (at a power output corresponding to cruising) of 0.435 lbs. per b.hp.-hr. were obtained, with the scavenging air supplied by an independent air compressor. With full load the air consumed was approximately 145 percent of the piston displacement.

988

These results were considered promising, since they indicated that a lighter and more compact engine than the conventional type could be developed advantageously. Accordingly, designs were prepared for an engine of suitable size for light commercial airplanes. This design was submitted, together with the data obtained on the single cylinder tests, to the Development Section of the Bureau of Air Commerce of the Department of Commerce. The data and design appeared so promising that specifications were written for an engine of this type to be used in small, privately owned airplanes, and on October 16, 1935, the Bureau ordered from Aircraft Development, Inc., the construction of such an engine. The contract required, in part, that the engine should deliver 90 b.hp. for a period of two hours at a speed of not over 2000 r.p.m., and that the specific fuel consumption should not exceed 0.65 lbs. per b.hp.-hr. It was further required that the engine develop 0.4 b.hp. for every pound of its weight, including generator and starter.

DESCRIPTION OF ENGINE

The engine built for the Bureau is a 4-cylinder (eight piston) execution of the same type as the original single cylinder engine, except that it was constructed of lighter materials and had a bore of 2-11/16 inches and a stroke of 3-3/8 inches per piston (167 cu. in. total displacement) and the engine shaft was designed to fit a standard propeller hub.

The cylinders are parallel to the drive shaft and disposed at equal distances and angles about the shaft (see figs. 1, 2 and 3). There are two pistons operating in each cylinder with heads opposite each other, thus forming a common combustion chamber. The pistons act directly on two cam plates by means of roller bearings. The cam plates are integral with the drive shaft and located one at each end. The drive shaft is equipped with single row annular ball bearings.

With the exception of the fuel injection valve there are no mechanically operated valves, the intake and exhaust being accomplished by the pistons uncovering the ports, one piston controlling the intake ports and the other piston controlling the exhaust ports. The fuel injection takes place under a pressure of 2000 lb. per sq. in. The pump comprises two units with two plungers each, of the Bosch type, placed 90° from each other on a cam casing which contains also a drive for the primary fuel pump and another for the tachometer connection. The cam shaft drive has an adjustable coupling which permits accurate injection timing. Each cylinder has a fuel discharge nozzle of the Bosch differential type.

The scavenging air is supplied by a centrifugal blower built within the engine and driven thru an intermediate gear at approximately ten times engine speed. Calibration of the blower showed that at an engine speed of 2000 r.p.m., and a delivery of 350 cu. ft. per min. at $6\frac{1}{2}$ inches Hg pressure, the power required was 8.34 hp., and the adiabatic efficiency approximately 60 percent.

The engine has dual ignition, which was originally supplied

by magnetos, but later changed to the timer and battery type in order to save bulk and weight. The final arrangement included two special 12 volt Autolite coils. Champion L.M. 5-C 14 mm spark plugs are used. The generator is driven by a belt from the end of the cam shaft, and an "Eclipse" type electric starter is used.

The engine is equipped with a centrifugal water pump, one oil pressure and two scavenger pumps. Lubrication is accomplished by spraying oil thru jets onto the cam plate, and the reciprocating units are lubricated by oil scooped from these elements.

The compression ratio is 9.5:1. The dry weight of the engine is 269 lbs., including generator and starter, which weigh 29 lbs. together. The overall length of the engine is 44-9/16 inches, and the diameter of the body approximately 15½ inches, excluding spark plugs and other protruding small accessories. The total running time on the engine prior to the acceptance test was approximately 40 hours, about ten hours of which were at or near full throttle.

INSTALLATION

The power was absorbed by an electric cradle dynamometer connected to the engine by means of a short flexible coupling. The engine was mounted on three rubber blocks of a natural frequency out of the range of operation of the engine. The torque was measured on a beam scale.

The fuel consumption was measured by the volume method, by timing the flow from a 215 c.c. pipette. Carbon dioxide could be

admitted to the pipette to force the flow. The fuel was supplied from a tank under pressure of water from the city mains.

The oil system consisted of an oil tank and an oil cooler, the latter being equipped with coils for use of water and steam for regulating the temperature.

The water system was equipped with a tank placed about ten feet above the engine. The centrifugal pump driven by the engine circulated the water between the tank and the cylinder jackets. Cold water could be added to the tank to maintain the proper temperature.

The exhaust system included a manifold attached to the engine outlets and loosely connected to the exhaust main of the laboratory. In this way the engine could freely oscillate due to the elasticity of the rubber blocks of its mount. The laboratory's exhaust main was connected to a clearing blower which produced a suction of approximately 1/10 inch Hg. An auxiliary air blower was used to keep the exhaust manifold from becoming overheated.

The electric current necessary for the ignition system was supplied by two regular automobile 6 volt batteries in series.

The throttle control was arranged so that it was possible to operate the air inlet and the fuel delivery simultaneously, or independently.

The instruments read during the test are indicated in the data.

DESCRIPTION OF TEST

The two hour acceptance test required by the contract was run on May 16, 1938. The test was made at 2000 r.p.m., at practically full throttle.

The fuel used was gasoline with an octane rating of 87 (sp. gr. 0.73), although the designer states that the engine has operated successfully on 72 octane fuel without detonation. Five per cent of lubricating oil was added to the fuel in order to save the fuel pumps and injection nozzles from excessive wear. Wolf's Head H.O. 120 oil was used. Oil consumption was not specified in the development contract, but the consumption during the test was somewhat less than 0.025 lbs. per b.hp.-hr.

The test was completed without difficulty. The torque was steady throughout the test except when a certain irregularity could be heard. This irregular sound, it is believed, was caused by unevenness in the injection nozzles which were of an experimental type, and may have caused slow or uneven burning in the cylinders, with corresponding explosions in the intake. Small oscillations of the column of mercury could be observed coincident with these explosions.

Near the end of the test the power dropped slightly, and it became necessary to open the throttle fully to maintain the power. Examination of the engine after the test showed that the coupling

between the engine and the injection pump was broken. Although it was still in operation, the timing of the injection pump was substantially altered, which accounts for the drop in power.

After completion of the acceptance test, runs were made to ascertain the friction horsepower.

RESULTS AND DISCUSSION

The engine met the contract requirements.

The average performance figures for the test are: 113 b.hp. (obs.) at 2030 r.p.m., 132 lb. per sq. in. b.m.e.p. (obs.), and a specific fuel consumption of 0.59 lb. per b.hp.-hr. The corrected values are: 117 b.hp. at 2030 r.p.m., or 115 b.hp. at 2000 r.p.m. with a b.m.e.p. of 136. The test data and the computed results are shown on pages 11, 12 and 13.

The mechanical efficiency at 2000 r.p.m. was 86 percent at full throttle, and 90 percent with the throttle closed.

The dry weight of the engine including generator and starter is 269 lbs., which gives a specific weight of 2.34 lb. per b.hp.

The tear-down inspection made after the test showed a broken Oldham coupling disc in the fuel pump drive, and one slightly fractured crosshead casting; all other parts were satisfactory.

The dry specific weight of this first Alfaro engine (2.34 lb. per b.hp.) is approximately in line with that of radial air-

cooled engines of the same power. The weight of the complete power plant, including the cooling system, which would add 0.4 to 0.5 lb. per b.hp., would therefore be greater than that of conventional engines of the same power. However, it is known that the weight of this first engine can be reduced considerably by refinement of design, because the cylinder block including the water jackets is made of cast iron. It has been estimated by the designer that an 8-cylinder execution of this engine would deliver approximately 265 b.hp. at 2400 r.p.m., with a total weight, including ethylene-glycol cooling system, generator and starter, of close to 400 lbs., which would give an estimated total specific weight of approximately 1.5 lb. per b.hp. The diameter of the main body of the engine would remain approximately $15\frac{1}{2}$ inches.

The frontal diameter of this engine is close to half that of equivalent radial engines, which would give a frontal area about one-fourth as great. This factor would prove a considerable advantage in minimizing power plant drag at high speeds, in addition to improving the visibility from single engine aircraft.

This engine embodies the important feature of two cycle operation which is essential to large reductions in specific weight. Also, it lends itself to the adaptation of compression ignition and the use of heavier fuels.

CONCLUSIONS AND RECOMMENDATION

1. It was concluded that the results of the test indicate the practicability of the Alfaro engine design.

2. It was further concluded that refinement of the design, together with additional testing, and development work, may be expected to produce a simpler, lighter and more compact power plant than conventional types for aircraft use.

3. It is recommended that the development of the Alfaro engine be continued.

988

ALFARO ENGINE

AIRCRAFT DEVELOPMENT, INC.

U. S. DEPARTMENT OF COMMERCE

GENERAL LOG SHEET

Test - Contract 2 Hr. Acceptance

Date 5-16-38

Observer - J. H. Geisse

Run No.	Time Hr. Min.	Counter RPM Start-Fin.	Oil Inlet Temp. °F.	Water Temp. °F In	Water Temp. °F Out	Oil Pressure Lb. per Sq. In. Gage	Throttle Setting	Spark Setting Degrees	Intake Port Pressure In. Hg
1	11:10	(Ind. (2000	120	140	180	25	F.T.	12	6.1
2	11:30	(S.2996 (F.3200	110	140	180	25			6.1
*3	11:45	(3200 (3406	105	140	180	25			6.0
4	12:00	(3406 (3608	100	140	180	25			5.7
5	12:15	(3608 (3812	100	140	180	25			6.0
6	12:30	(3812 (4015	100	140	180	25			6.0
7	12:45	(4015 (4217	100	140	175	25			6.0
8	1:00	(4217 (4420	100	140	170	25			6.0
9	1:10	(Ind. (2020	100	140	170	25			6.0

*Generator pulley came off and was left off for balance of run.

ALFARO ENGINE

AIRCRAFT DEVELOPMENT, INC.

U. S. DEPARTMENT OF COMMERCE

GENERAL LOG SHEET

Test - Contract 2 Hr. Acceptance

Date 5-16-38

Observer - J. H. Geisse

Run No.	Counter rpm	Torque lb. at 21 inches	Dry Bulb Temp. °F.	Wet Bulb Temp. °F.	Barometer observed pressure cm Hg	Secs. Fuel 215 c.c.	S.F.C. (lbs.-per b.hp.-hr.)	B.Hp. Obs.	B.Hp. Corr.
1	Ind. 2000	165	79	60	75.2	- -	- -	110	113.5
2	2040	163				17	(.66)	111	114.5
3	2060	169				17.8	.600	116	119.7
4	2020	170				18.2	.595	114.5	118.1
5	2040	169.5				18.6	.578	115.3	119.0
6	2030	169.5				18.6	.581	114.8	118.4
7	2020	168.5				19.0	.575	113.7	117.3
8	2030	166				18.6	.592	112.3	115.9
9	Ind. 2020	165				18.5	.604	111	114.5
Av. =	2030					Av. -	.59	113.2	116.8

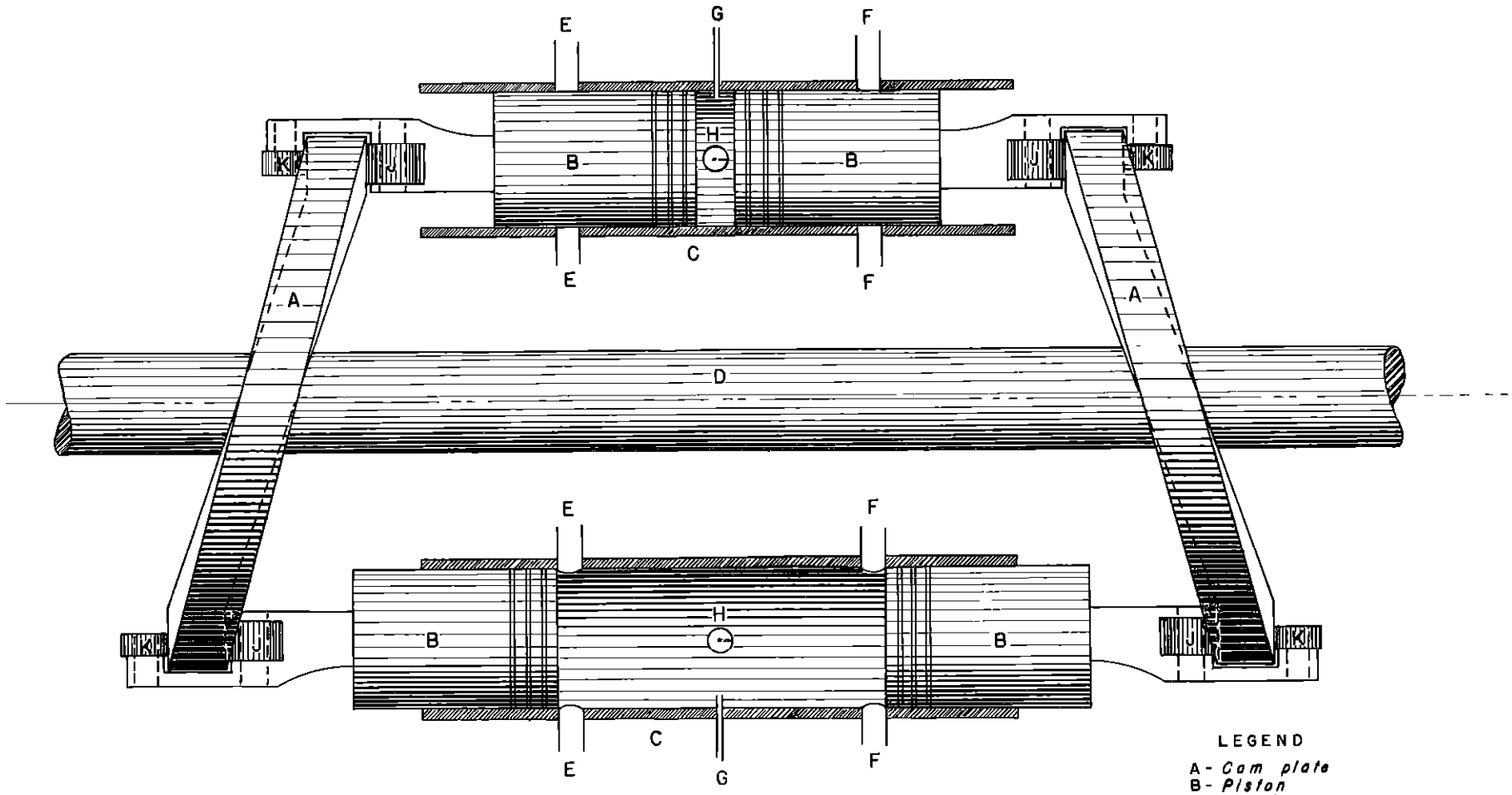

LEGEND

A - *Cam plate*
B - *Piston*
C - *Cylinder*
D - *Drive shaft*
E - *Exhaust port*
F - *Intake port*
G - *Fuel injector*
H - *Spark plug*
J - *Roller*
K - *Roller*

C&GS A 749

SCHEMATIC VIEW

TWO CYCLE DOUBLE-OPPOSED PISTON BARREL TYPE ENGINE

FIGURE 1

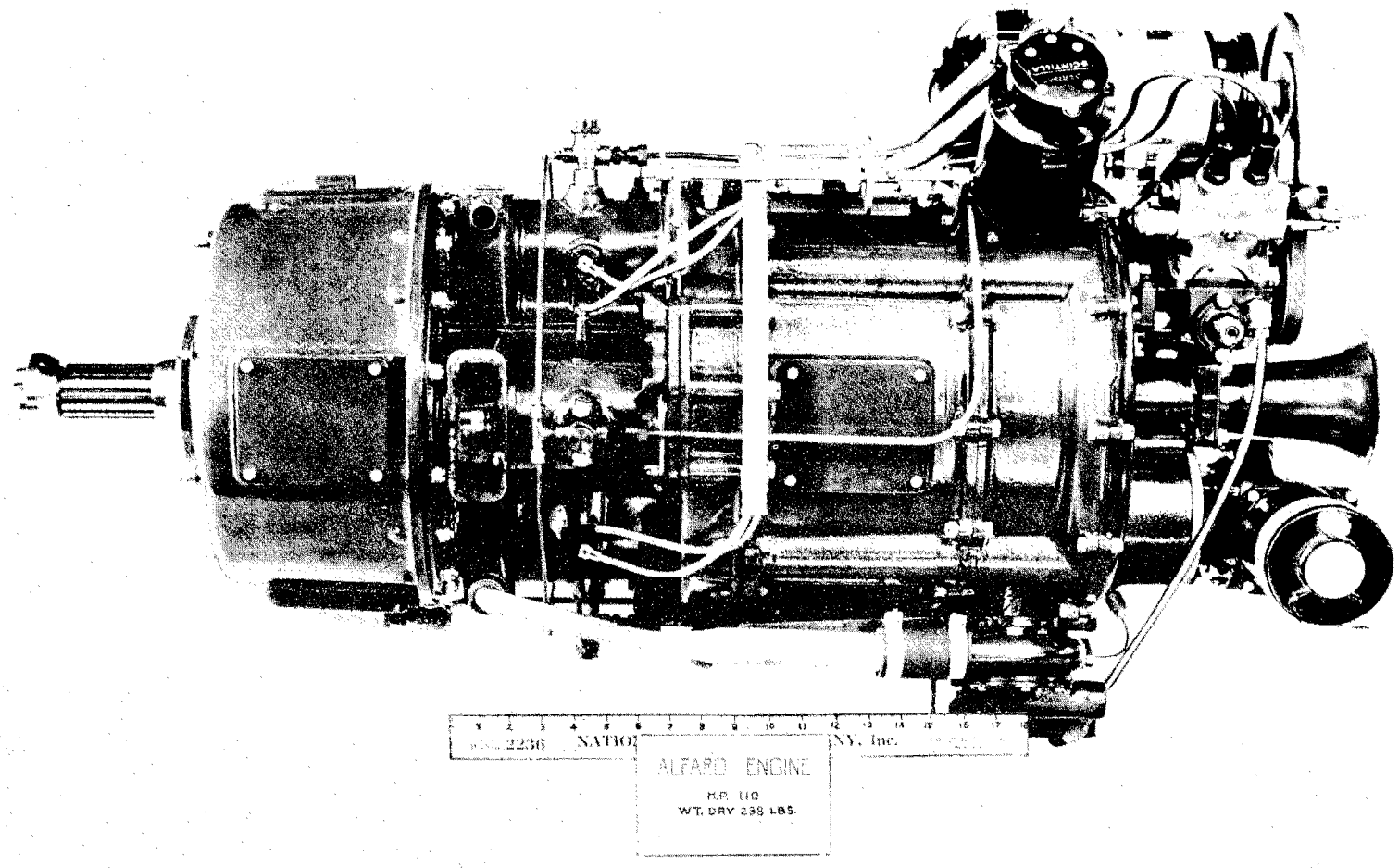

Figure 2

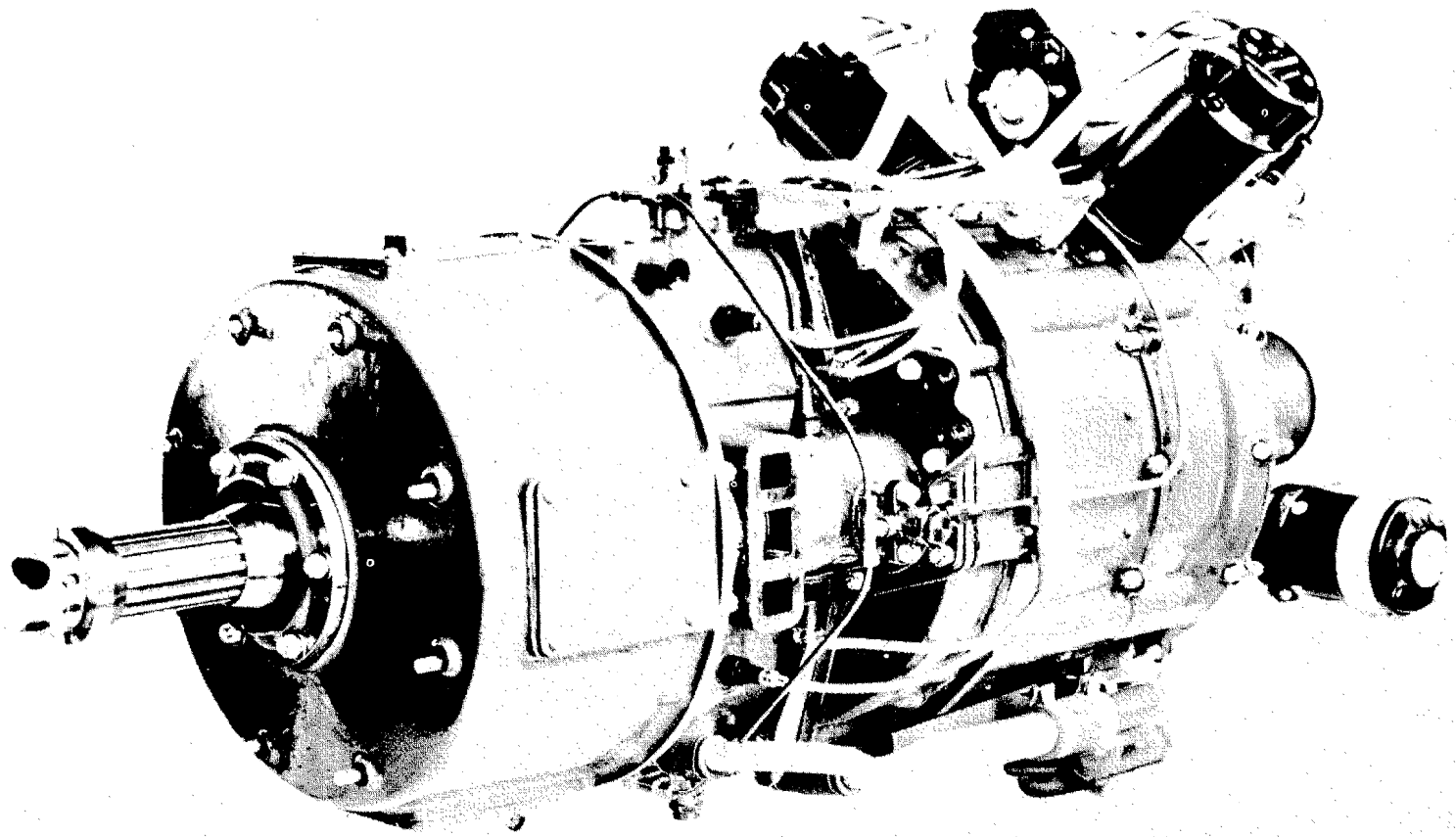

Figure 3