REPORT NO. FRA

FRA/ORD 81/75.1

ENGINEERING DATA CHARACTERIZING THE FLEET OF U.S. RAILWAY ROLLING STOCK
Volume I User Guide

Frank P. DiMasi

U.S. DEPARTMENT OF TRANSPORTATION
Research and Special Programs Administration
Transportation Systems Center
Cambridge MA 02142

April 1980

FINAL REPORT

DOCUMENT IS AVAILABLE TO THE PUBLIC
THROUGH THE NATIONAL TECHNICAL
INFORMATION SERVICE, SPRINGFIELD,
VIRGINIA 22161

Prepared for

U.S. DEPARTMENT OF TRANSPORTATION
FEDERAL RAILROAD ADMINISTRATION
Office of Research and Development
Washington DC 20590

Technical Report Documentation Page

1. Report No.	2. Government Accession No.	3. Recipient's Catalog No.
4. Title and Subtitle ENGINEERING PARAMETRIC CHARACTERIZATION OF THE U.S. FLEET OF RAILWAY ROLLING STOCK		5. Report Date August 1979
		6. Performing Organization Code
7. Author(s) P.G. Przybylinski & G.B. Anderson		8. Performing Organization Report No. -
9. Performing Organization Name and Address Pullman Standard Company 1414 Field Street Hammond IN 46320		10. Work Unit No. (TRAIS)
		11. Contract or Grant No. DOT-TSC-1362
12. Sponsoring Agency Name and Address U.S. DEPARTMENT OF TRANSPORTATION Transportation Systems Center Kendall Square Cambridge MA 02142		13. Type of Report and Period Covered Final Report
		14. Sponsoring Agency Code

15. Supplementary Notes

16. Abstract

This report contains engineering parameter descriptions of major and distinctive freight vehicle configurations covering approximately 96% of the U.S. freight vehicle fleet. This data has been developed primarily for use in analytical simulation modeling of rail vehicles to analyses of vehicle/track dynamic interaction dynamics. To characterize loaded freight vehicles, representative ladings and average load conditions were defined, and load-dependent characterizations were developed for each major vehicle/lading combination. Freight truck design data was assembled and correlated with carbody descriptions, and some typical freight vehicle wheel profiles were defined based on a field measurement survey. Population data and estimates of total annual mileage traveled by each vehicle and vehicle/lading combination are also provided.

Engineering parameter descriptions of major locomotive and passenger vehicle design groups are also provided.

The concept of generically similar railcar configurations is also introduced as a practical and cost effective approach to analyzing large numbers of vehicles in rail system dynamics studies.

Volume I - is user oriented containing (a) a summary description of data developed, (b) a detailed data directory to facilitate access to data contained in appendices of Volume II, and (c) supplemental comments on elements of the detailed methodology.

Volume II- contains the fleet characterization data and describes the detailed methodology used to generate the data.

17. Key Words	18. Distribution Statement
Engineering Parameters, Freight Vehicles, Locomotives, Passenger Vehicles, Characterization, Freight Wheel Profiles.	

19. Security Classif. (of this report)	20. Security Classif. (of this page)	21. No. of Pages	22. Price

Form DOT F 1700.7 (8-72) Reproduction of completed page authorized

PREFACE

The Federal Railroad Administration (FRA) is sponsoring research, development and demonstration programs to provide improved safety, performance, reliability and maintainability of the rail transportation system at reduced life-cycle costs. The Transportation Systems Center is supporting the FRA Office of Research and Development by developing engineering data sufficient for characterization of the vehicle/track system and conducting analytical and experimental studies under the Improved Track Structure Research Program to provide the technological base for meeting these objectives. These studies are aimed at developing relationships between track design, construction, and maintenance parameters and the safety and performance of the fleet of railcars operating over the nation's track system in order to:

(1) Quantify vehicle/track dynamic responses associated with variations in track geometry and structural compliance for the range of rolling stock including freight, locomotive and passenger vehicles in operation over the track system network, and

(2) Develop improved performance-based safety standards for track construction and maintenance which limit vehicle/track dynamic interactions to safe and tolerable levels at reduced life cycle costs.

Accomplishment of these goals requires development of a physical characterization of the fleet of U.S. railway rolling stock operating over the track system network. Engineering parameter descriptions of freight, locomotive and passenger vehicles are necessary in sufficient detail for use in analytical simulation modeling to predict vehicle/track dynamic response characteristics for the range of railcars and track conditions which characterize the U.S. railway system.

1.0 INTRODUCTION

1.1 BACKGROUND

The Transportation Systems Center, in support of the FRA Office of Rail Safety Research, is conducting analytical and experimental studies of the interrelationship between track geometry variations and railcar safety related dynamic response under the Improved Track Structures Research Program. In order to conduct these studies, a physical characterization of the fleet of U.S. railway rolling stock, including locomotive, freight and passenger vehicles, is required for use in analytical simulation models which will be used to predict the dynamic performance of:

(a) Railcars typical of those having a high incidence and frequency of derailment in selected derailment scenarios.

(b) Railcars typical of a particular type of service (e.g., all bulk commodity cars), and/or

(c) The entire fleet of U.S. railway rolling stock described in terms of generically similar classes of railcars for more global analyses of the vehicle/track system network aimed at developing improved performance-based standards for track geometry.

The fleet characterization must envelop a wide range of vehicle configurations including approximately 1.7 million U.S. owned freight vehicles, 22,000 locomotives and 5,000 passenger vehicles. In particular, the large freight vehicle population exhibits wide variations in length, capacity, car function and other design-related features. Fleet characterization data must span this range of equipment variation and configuration and provide engineering parameter descriptions in sufficient detail for use in a wide range of rail vehicle dynamic simulation models. These models may be used for assessing railcar lateral stability, lateral/roll/yaw forced response (e.g., harmonic roll), vertical pitch/bounce forced response, longitudinal train action, and

curving performance. Engineering parameter descriptions must include all principal carbody and truck dimensions, masses and inertias (including effects of representative loads carried), carbody flexibility characteristics, parameters describing carbody/truck interface, and truck suspension data.

The fleet characterization data in this report has been developed by Pullman Standard R&D of Hammond, Indiana, under Contract DOT-TSC-1362, entitled "Engineering Data for Characterization of Railway Rolling Stock and Representative Ladings and Wheel Profiles." Volume I is intended to serve as a user's guide and data directory to the fleet charaterization data contained in the appendices of Volume II and to facilitate organizing various data elements into "complete vehicle descriptions" for use in vehicle simulation modeling. Volume II also contains the detailed methodology used to generate the characterization data.

1.2 APPROACH

The fundamental problem associated with developing characterizing data for the fleet of 1.7 million U.S. freight vehicles at the desired level of detail, involves making reasonable tradeoffs between the extremes of detail and accurate representation. At one extreme, every vehicle can be considered distinctive in some way. However, characterization of the fleet in this manner would obviously result in a prohibitively expensive venture producing an unmanageable amount of information. At the opposite extreme one might consider characterizing the fleet in terms of just a few, representative vehicles. The large variations in equipment size, capacities, mechanical configurations and functions, however, are broad enough such that this approach would not produce information in adequate detail to accurately model a significant part of the fleet.

The amount of data available in the literature must also be considered. There are several detailed vehicle characterizations available in the published literature based on FRA and AAR/TTD

sponsored test programs, but these characterizations are representative of a very small fraction of the fleet. On the other hand, there are two major fleet registers available for analysis (10,11), which cover the entire freight vehicle fleet and contain significant amounts of useful dimensional and design related data on individual vehicles.

Detailed individual vehicle characterization and the all-encompassing fleet register both include parts of what is really needed. The former characterizes a vehicle in the right depth and detail; the latter contains information sufficient to define major and distinctive categories of dimensionally similar railcar designs which in the aggregate describe the composition of the entire freight vehicle fleet. The fleet register file does not, however, contain enough data to provide a detailed characterization of these vehicle design groups.

The above considerations led to the approach of defining and developing detailed engineering parameter descriptions for major and distinctive vehicle design categories, as shown in Figure 1-1, each category being representative of a "standard" or "equivalent" vehicle design group having a significant population in the fleet. A total of 198 dimensionally similar freight vehicle design categories (or DVCs) were defined, based on analysis of fleet register data, to represent the range of freight vehicle equipment types and the variations in configuration. Figure 1-2 illustrates the number and relative populations of these design categories by cartype. A representative railcar was selected from each DVC and extended engineering parameter descriptions were developed for this vehicle, which in an approximate sense, are representative of the entire group pouplation. Representative ladings were defined for each DVC and an additional 434 loaded-vehicle characterizations were also developed. Major freight vehicle truck designs were identified, engineering parameter descriptions were assembled, and truck designs correlated with freight vehicle carbody descriptions. Representative freight vehicle in-service wheel profile descriptions were also developed based on a small field measurement survey.

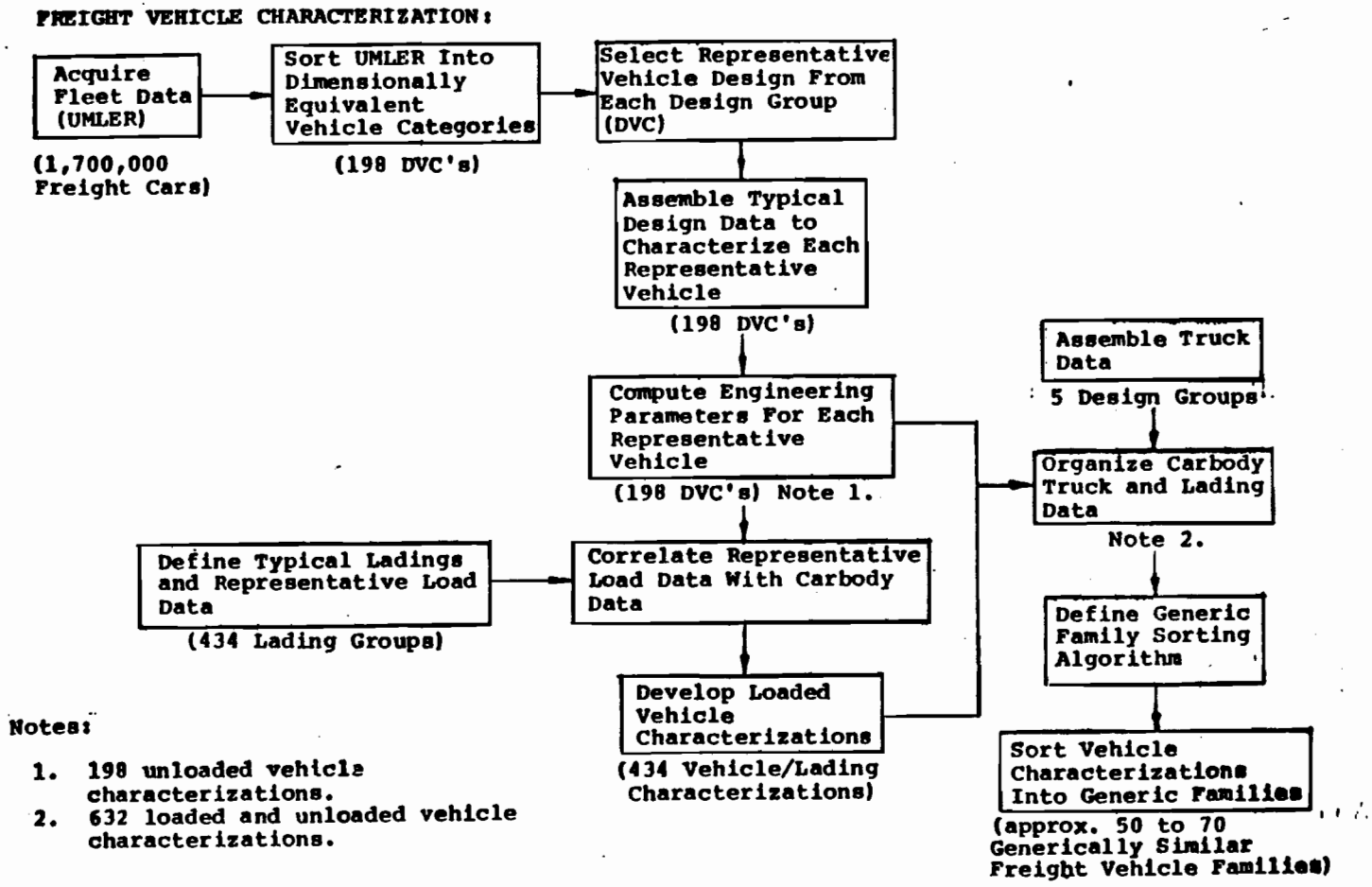

FIGURE 1-1. OVERVIEW OF METHODOLOGY USED IN FREIGHT VEHICLE CHARACTERIZATION

Figure precedes Text Reference

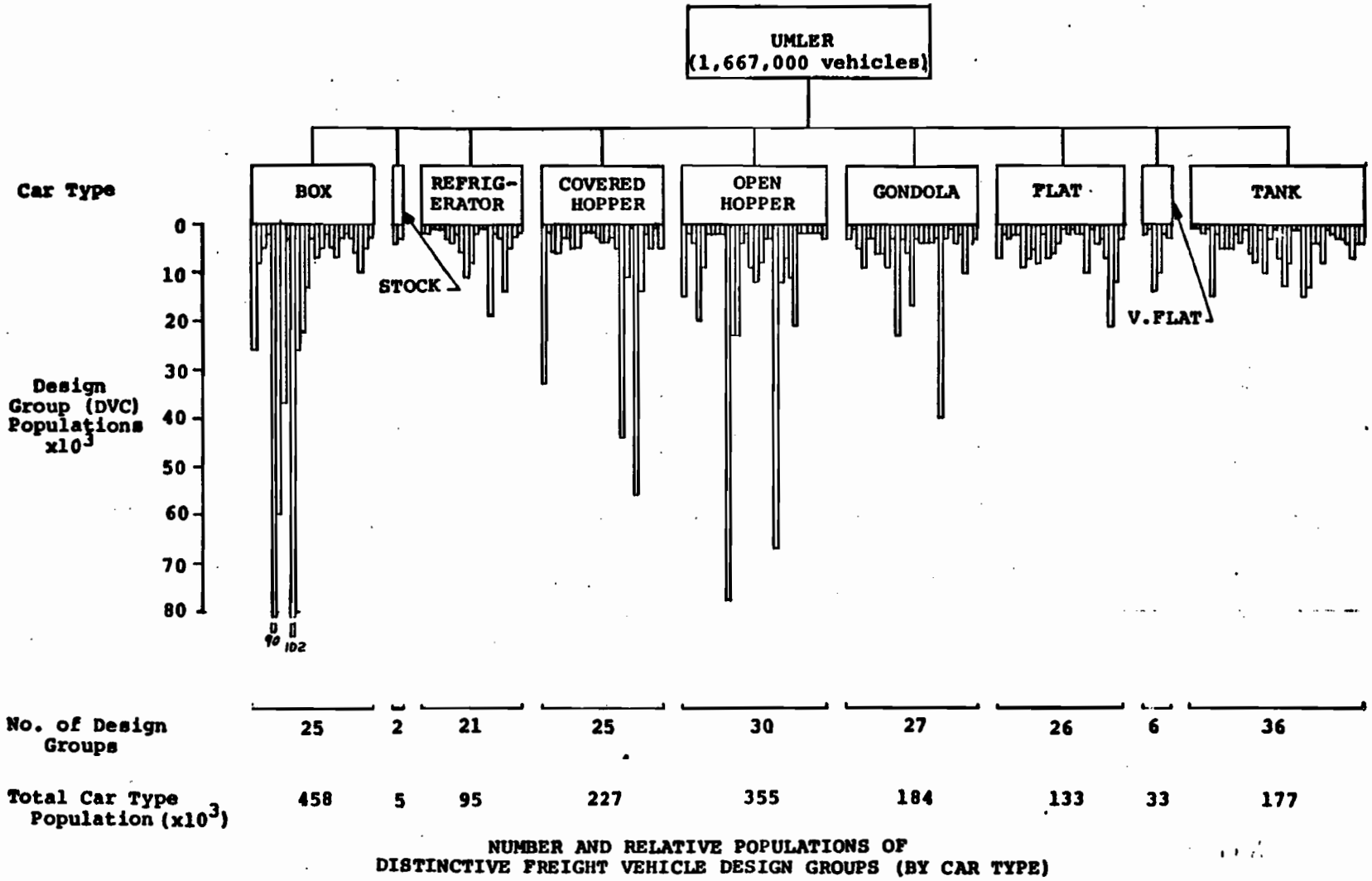

FIGURE 1-2. NUMBER AND RELATIVE POPULATIONS OF DISTINCTIVE FREIGHT VEHICLE DESIGN GROUPS (BY CAR TYPE)

The UMLER file used in these analyses was current as of December 1977. Since the overall composition of the fleet does not change rapidly from year to year the fleet characterization data developed should be representative of the current fleet. Lading data was developed based on waybill sample data and ICC annual carload statistics for CY1974, which was the latest available at the time of this study. Overall lading statistics such as carloads and freight car miles traveled for the year 1974 are also projected to be very similar to current statistics.

To provide a reduced number of freight vehicle characterizations for use in more global rail systems dynamics analyses, the 198 vehicle and 434 vehicle/lading characterizations have been consolidated into a smaller number of generically similar vehicle families and statistical engineering descriptions developed for each family. This step is also shown in Figure 1-1. These statistical descriptions will be useful in probabalistic analyses of each railcar family to predict the likelihood of dynamic response to statistically described track conditions.

Major and distinctive groups of locomotives and passenger vehicles have also been defined; however, the relatively small populations of these vehicles permits a more direct approach to developing engineering parameter descriptions. On the other hand, the relatively complex suspension systems typically used by these vehicles make these characterizations more difficult to complete in their entirety.

1.3 REPORT ORGANIZATION

Section 2.1 of this report contains an overview description of the freight vehicle characterization data developed and, to aid in this description, some discussion of the methodology used to generate this data. The data and detailed methodology descriptions are contained in Volume II.

Section 3.0 provides an overview description of the locomotive and passenger vehicle data developed. The data and detailed methodology used to generate this data are contained in Volume II.

Section 4.0 contains supplemental discussions and/or data on (a) computational methods used in computing freight vehicle carbody parameters; (b) variations in freight vehicle truck suspensions; and (c) development of generic families of freight vehicles.

SECTION 2.0 SUMMARY DESCRIPTION OF FLEET CHARACTERIZATION DATA

A physical characterization of the fleet of U.S. railway rolling stock including locomotives, freight and passenger vehicles, has been developed in terms of engineering parameter descriptions for major and distinctive vehicle design categories. The following paragraphs provide an overview description of the nature of the data developed and the methodology used to produce it.

2.1 OVERVIEW OF VEHICLE CHARACTERIZATION DATA

not parallel

Major and distinctive freight vehicle design groups representative of "standard" or "equivalent" vehicle configurations, having significant populations in the freight vehicle fleet, have been developed through analysis of the Universal Machine Language Equipment Register (UMLER). The UMLER file was acquired from the AAR in the form of magnetic data tapes and contains important dimensions and design-related information on the fleet of approximately 1.7 million U. S. owned freight vehicles. The UMLER tapes were first sorted to group vehicles on the basis of similar mechanical design and function, hence separate groups were established for box, stock, refrigerator, covered hopper, open-top hopper, gondola, flat, vehicular flat, and tank cars. Each of these mechanical car types has a significant population and individual cars (within a mechanical car type) exhibit large variations in length, capacities and other design related features. In order to provide reasonable characterizations of the vehicles in each car type category, it was necessary to establish sub-groups which were to a large degree identical or at least very similar in terms of overall design. This was accomplished by re-sorting the vehicles in each car type category into distinctive sub-groups defined in terms of a matrix of ranges on primary and secondary physical attributes describing each car type as contained in UMLER. For example, it

was found that the fleet of 476,000 box cars could be characterized by a total of 25 distinctive design groups using this procedure. The following example illustrates the form of the resulting design group definitions for each distinctive box car configuration.

Box Car Group No. 12A
(Medium Length and Weight Capacity Vehicles)

Description	Range of Possible Values
Inside Length	50" to 50'11"
Outside Length	54' to 55'11"
Extreme Height	14' to 15'11"
Door Width	8' to 10'11"
Door Configuration	Centered
Nominal Weight Capacity	140,000 lb. to 160,000 lb.
Light (Tare) Weight	56,000 lb. to 71,000 lb.
Draft Gear or Cushion	Standard (Draft Gear)
Truck Center Spacing	40' to 40'11'
Population	102,171 (21.5% of box car fleet)

It can be seen that box car groups are defined in terms of ranges on principal dimensions, door size and configuration*, light weight (weight of car body plus a carset of trucks), nominal weight capacity and draft gear characteristics. After sorting in this manner, group population statistics were developed. The box car design (group) cited above has a population of over 100,000 vehicles and accounts for about 21.5% of the entire box car fleet. Although this is the largest single group in terms of population, all of the design groups have significant populations. Very small design groups have either been excluded as inconsequential or lumped with similar design groups by adjusting group definitions as required. In the aggregate, about 96% of all box cars registered in UMLER are represented by 25 box car design groups definitions similar to that described above. Table 2-1 summarizes: (a) the

*Door size and configuration has been included because of its influence on carbody flexibility characteristics.

TABLE 2-1. NUMBER OF DISTINCTIVE VEHICLE CONFIGURATIONS AND PERCENTAGE OF POPULATION REPRESENTED BY MECHANICAL CAR TYPE

MECHANICAL CAR TYPE	NUMBER OF DISTINCTIVE DESIGN CATEGORIES FOR EACH MECHANICAL CAR TYPE	NUMBER OF VEHICLES INCLUDED IN DESIGN CATEGORIES	TOTAL CAR TYPE POPULATION (UMLER)	PERCENT POPULATION INCLUDED IN DESIGN GROUPS
BOX	45	458,019	476,179	96.2%
STOCK	2	4,895	5,590	87.6%
REFRIGERATED	21	94,565	98,896	95.6%
COVERED HOPPER	25	226,957	241,112	94.1%
OPEN HOPPER	30	355,450	366,769	96.9%
GONDOLA	27	183,911	189,495	97.1%
FLAT	26	132,936	141,020	94.3%
VEHICULAT FLAT	6	33,093	33,596	98.5%
TANK	36	177,072	187,539	94.4%
ALL CARS	198	1,666,898	1,740,196	95.8%

number of major and distinctive vehicle design groups developed to represent the range of vehicle configurations comprising other mechanical car types, (b) the aggregate number of vehicles included in the design groups (c) total car type populations and (d) the percent population of each mechanical car type represented by the design group definitions.

It can be seen that a total of 198 design groups were developed in this manner to define all major and distinctive freight vehicle designs characterizing the fleet of box, stock, refrigerator, covered hopper, open-top hopper, gondola, TOFC and general flat, vehicular flat and tank cars. Approximately 96% of the 1.7 million freight vehicles registered in UMLER are represented by the 198 design groups. Table 2-2 indicates the primary and secondary attributes used in establishing design groups for the various mechanical car types.

Because many of the physical attributes used in developing the design group definitions are dimensional in nature, the design groups are frequently referred to as Dimensional Vehicle Categories or DVCs throughout Volume II and in later sections of this report. Hence the acronym "DVC" and the expression "design groups" may be used interchangeably. In addition, the various mechanical equipment types (box, stock, etc) are often referred to as "mechanical car types" or simply "car types". However, all of these terms are intended to denote either a major vehicle class or subgroups within that major class. Equivalent references to a major class or subgroups are listed below.

Major Class (e.g., all Box Cars or all Flat Cars)	Subgroups Within Major Class.
Mechanical Equipment Type	Design Groups
Mechanical Car Type	Dimensional Vehicle Categories
Car Type	DVCs

TABLE 2-2. PRIMARY AND SECONDARY UMLER ATTRIBUTES USED IN DEVELOPING DVC DESCRIPTIONS

Mechanical Car Type	Weight Capacity	Tare Weight	Volumetric Capacity	Outside Length	Inside Length	Extreme Height	Platform Height	Door Wide & Type
Box	P	P	*	P	P	S	*	S
Stock	P	P	*	P	P	S	*	S
Refrigerator	P	P	*	P	P	S	*	S
Covered Hopper	P	S	P	P	S	S	*	*
Open Hopper	P	S	P	S	S	S	*	*
Gordola	P	P	S	P	P	S	*	*
Flat (incl TOFC)	P	P	*	P	P	S	S	*
Vehicular Flat	P	P	*	P	P	S	S	*
Tank	P	P	*	P	*	S	*	*

P = Primary Attribute

S = Secondary Attribute

* = Not available or not applicable.

After defining the design groups (or DVCs) for each car type in the manner described above, a single railcar design was selected to represent each of the dimensionally similar design groups by searching Pullman's engineering files to identify a vehicle having a nominal configuration (in terms of the primary and secondary sorting parameters used to define each group) which is representative of the entire group population. Having selected a representative railcar design, important structural data could be assembled from design drawings and other sources for use in extending the physical characterization of the representative railcar and in an approximate sense, the entire design group population. Hence engineering parameter descriptions were developed for each "representative railcar by assembling data from the literature, the fleet register, design drawings, equipment manufacturers, FRA and AAR/Track Train Dynamics sponsored test program and/or by computational methods.* Representative values of all principal carbody dimensions, e.g., heights, weights and capacities, mass moments of inertia, carbody flexibility characteristics and coupler and draft gear data have been assembled to characterize each of the 198 carbody design groups. Table 2-3 indicates typical data developed to characterize the boxcar design group previously discussed.

BAD Spacing

Freight vehicle truck characterization data has been assembled primarily from published reports describing experimental test programs conducted by the AAR or FRA sponsored contractors. [1,2,3,4] Engineering data includes assembled truck and component masses and inertias, principal dimensions, typical suspension characteristics, and nominal clearances between components. Data for 50, 70, 100, 125 ton trucks and a special low-level truck design used with certain low platform TOFC/COFC and vehicular flat cars was developed.

The 50, 70 and 100 ton capacity truck designs consititue the preponderance of truck designs in current use accounting for approximately 24%, 43% and 32% respectively, of the freight vehicle truck population.

The typical truck suspension data provided is not comprehensive in the sense that certain stiffness parameters are non-linear with spring travel and may also vary with different spring group arrangements.**

*A supplemental discussion on computational methods is provided in Section 4.1
**An overview discussion of these variations is provided in Section 4.2

TABLE 2-3. TYPICAL CARBODY CHARACTERIZATION DATA FOR REPRESENTATIVE RAILCAR DESIGN

Example: Box Car Group No. 12A

Descriptor	Nominal Value	
Inside Length	50.5 ft	Appendix A Volume II Physical Attributes of Representative Railcar Design
Outside Length	54.5 ft	
Extreme Height	15.08 ft	
Door Width	9 ft	
Door Type	Centered	
Nominal Weight Capacity	149,000 lbs	
Light (Tare) Weight	63,500 lbs	
Draft Gear or Cushion	Standard	
Truck Center Spacing	40.83 ft	
Carbody Mass	122.2 # sec^2/in	Appendix C Volume II Extended Railcar Characterization Data Based Primarily on Engineering Computations
Carbody Yaw Inertia	4.24×10^6 in lb sec^2	
Carbody Pitch Inertia	4.3×10^6 in lb sec^2	
Carbody Roll Inertia	4.8×10^5 in lb sec^2	
C.G. Height	69.6 in	
Vertical Bending Stiffness	4×10^6 lb/in	
Lateral Bending Stiffness	1.8×10^6 lb/in	
Torsional Stiffness	41×10^7 in lb/rad	
Length Between Coupler Pins	596 in	
Length of Coupler	29.3 in	
Vertical Bending Mode Frequency	38.0 Hz	
Lateral Bending Mode Frequency	31.1 Hz	
Torsional Mode Frequency	14.6 Hz	

Note: This table is for unloaded carbody only. Excludes population, mileage and codification data.

The appropriate truck has been correlated with each of the 198 representative design groups (or DVCs) by summing the vehicle lightweight and weight capacity and comparing it with the AAR standard rail load limit for each truck capacity group. This permits a simple correlation to be made since in most cases the vehicle weight capacity is defined as the difference between the rail load limit for a particular truck capacity and the vehicle lightweight. The five truck designs are correlated with carbody designs using a "truck code" identifier as described in Section 2.2.

Since many carbody parameters are load dependent, typical ladings carried and representative loads and loading configurations are of interest. Representative ladings and average load conditions have been defined for each mechanical car type through analysis of the FRA's 1% Waybill Sampling Tapes, supplemented by annual carload data taken from the ICC's Freight Commidity Statistics and Pullman's knowledge of car-commodity relationships. As a result of this analysis it was determined that certain mechanical car types such as covered hopper, open top hopper, vehicular flat stock and tank cars (about 50% of the carbody design groupw) were essentially commodity and load-dependent. As such, "typical ladings" could be characterized by a single commodity group which usually fills the vehicle to maximum weight capacity. These commodity groups have average densities which correlate with a carbody's weight capacity and volumetric capacity since these cars were designed to carry bulk commodities having a specific density. Other mechanical car types such as box, refrigerator, gondola, and flat cars tend to be commodity independent, hence multiple "representative" ladings were required to describe typical loads for these vehicles.

As a result of the lading analysis, representative lading descriptions have been defined for all principal commodity groups transported by each mechanical car type in terms of specific commodities (or commodity groups), average commodity density, average weight per carload, average volume per carload, number of annual carloads, average mileage per carload and an estimate of total annual car-miles traveled by each vehicle design group/representative lading combination.

Representative lading descriptions developed for each mechanical car type were correlated with the vehicle design groups characterizing that car type through a system of lading code identifiers and load-dependent carbody parameters were re-computed for each loaded carbody configuration. This resulted in 434 loaded carbody characterizations in addition to 198 empty carbody characterizations.

To complete the freight vehicle characterization effort a small field measurement survey was conducted with the object of defining typical wheel profile wear patterns found on in-service freight vehicles. Wheel (and rail) profile data contain important spatial data necessary for establishing non-linear wheel/rail geometric constraint relationships which are important in analyses considering lateral wheelset forces and/or displacements. Accordingly, some representative in-service wheel profile data has been assembled to provide additional data for use in analytical simulation modeling activities concerned with railcar lateral dynamics, stability analyses, and/or curve negotiation.

A total of 262 wheel profiles were obtained from a representative cross-section of the freight vehicle fleet in terms of extremes of size and configuration. The profiles were visually analyzed and sorted into groups according to similar tread and flange characteristics such as: flange slope and root radius, flange location (tantamount to flange wear) and tread contour. This analysis resulted in the definition of six symmetrical wheel profile groups and four asymmetrical wheelset groups. A representative wheel profile (or set of wheel profiles in the case of an asymmetric group) was selected from each of these groups and a digitized description was prepared and stored on magnetic tape to facilitate future use. This data is available at TSC.

2.1.1 Summary of Freight Vehicle Data and Potential Uses

The engineering parameter descriptions of freight vehicle carbodies (with or without representative ladings), coupler and draft gears and freight truck designs provides a physical characterization of the range of loaded or unloaded freight vehicle configurations operating over the nation's track system

network. These descriptions together with representative wheel profile data provide freight vehicle fleet characterization data suitable for computer simulation modeling of a wide range of vehicle/vehicle or vehicle/track dynamic interaction modes. These analyses include: lateral stability, lateral/yaw/roll forced response (e.g. harmonic roll); vertical pitch/bounce forced response; curve negotiations; longitudinal train action; and effects of train action or vehicle/track dynamic interaction on structural components of vehicles and/or track.

The freight vehicle fleet characterization data described above has other potential uses. In the aggregate, the 198 empty and 434 loaded vehicle characterizations with associated populations or mileage estimates describe the composition, detailed physical characteristics, car-commodity relationships and average load conditions, and approximate relative utilization or frequency of occurrence of various rolling stock configurations (based on estimated mileage data). Accordingly, this data is potentially useful to freight systems analyses. Selected carbody data and mileage estimates have been used at TSC in conjunction with accident data contained in the FRA's Railroad Accident/Incident Reporting System (RAIRS) to study derailment incidence and to approximate relative derailment frequencies (derailments per million miles traveled) for various equipment configurations.

2.1.2 Generically Similar Freight Vehicle Families

Because of the relatively large number of vehicle and vehicle/lading characterizations developed, the concept of defining a reduced number of generically similar freight vehicle groups has been introduced as a practical and cost-effective approach to quantifying freight vehicle fleet dynamic response characteristics in analytical studies of rail systems dynamics. Analysis of individual vehicle configurations in specific derailment-related scenarios are, and will continue to be necessary. However, more global analyses of the vehicle/track system will require a reduced number of statistical vehicle characterizations describing the full range of rolling stock configurations in addition to statistical descriptions of track geometry variations. Accordingly, the 198 empty and 434 loaded vehicle characterizations previously discussed have been further grouped into generically similar freight vehicle families on the basis of key physical attributes which are known to have a strong influence on a railcar's dynamic

response. These attributes include: truck suspension, truck center spacing, c.g. height, gross vehicle weight and carbody flexibility. Pullman has completed an initial definition of generically similar freight vehicles resulting in 66 statistically described vehicle groups. These descriptions are contained in Volume II. The composition of generic freight vehicle families in terms of codified data indicating car type, design group (DVC), and lading codes, is also contained in Volume II. A supplemental discussion on the approach and methods used to generate these families is contained in Section 4.0 of this report.

2.2 ORGANIZATION AND CODIFICATION OF FREIGHT VEHICLE CHARACTERIZATION DATA

The freight vehicle characterization data discussed above is contained in the appendices of Volume II.* The following summary outline indicates the nature and format of the data contained in each appendix.

Location	Data Description
Appendix A	contains definitions of dimensionally similar vehicle design categories (DVCs) in terms of dimensional data, special equipment features, and carbody capacities, for the 198 major and distinctive freight vehicle configurations identified. Population and percent population data is also included. This data is linked with data contained in the other appendices by specification of mechanical car type and a DVC code (for that car type). It should be noted that flatcars with end-bulkheads and flat cars without end bulkheads are interspersed under the general heading of Flatcars in Appendix ? In Appendix C, bulkhead and non-bulkhead cars are separated. Flatcar numbers (i.e. flatcar DVCs) 20a, 20b, 21, 28a, 28b and 29 represent TOFC/COFC designs.
	Sample DVC data for box cars is contained in Table 2-4. Each of the DVCs is assigned a brief description which is indicative of car size and weight. The DVCs are generally organized by listing in order of increasing (inside) length or truck capcity (indicative of gross weight). The percent of vehicles equipped with roller vs plain bearing trucks is also indicated.

*All references to appendices in this Volume (I) refer to appendices in Volume II.

TABLE 2-4. BOX CAR DIMENSIONAL CATEGORIES

DVC CODE	DESCRIPTION	BEARINGS R-ROLLER P-PLAIN	INSIDE LENGTH	OUTSIDE LENGTH	EXTREME HEIGHT	DOOR WIDTH	DOOR TYPE	NOMINAL CAPACITY	LIGHT WEIGHT	DRAFT GEAR OR CUSHION	TRUCK CENTERS	POPU-LATION	% POPU-LATION
2a	40'-50T	R-.34 P-.66	40'-6"	44'-6"	15'-1"	8'	CENTERED	110k	52.0k	STD.	30'-10"	26,295	5.5
2b	40'-50T	R-.34 P-.66	40'-6"	44'-6"	15'-1"	14'	STAGGERED	110k	52.0k	STD.	30'-10"	8,343	1.8
3	40'-50T	R-.23* P-.77*	40'-6"	48-0"	15'-1"	6'	STAGGERED	100k	47.0k	STD.	30'-10"	5,560	1.2
4	40'-50T	R-.23* P-.77*	40'-6"	44'-6"	14'-10"	8'	CENTERED	110k	62.0k	STD	30'-10"	2,068	0.4
35	40'-50T	R-.13 P-.87	40'-6"	44'-6"	15'-1"	8'	CENTERED	110k	47.0k	STD.	30'-10"	90,450	19.0
8a	50'-50T	R-.24 P-.76	50'-6"	54'-6"	15'-1"	9'	CENTERED	110k	58.3k	STD.	40'-10"	60,077	12.6
8b	50'-50T	R-.24 P-.76	50'-6"	54'-6"	15'-1"	15'	STAGGERED	110k	58.3k	STD.	40'-10"	37,523	7.9
9	50'-50T	R-.24 P-.76	50'-6"	54'-6:	15'-1"	15'	STAGGERED	100k	73.0k	STD.	40'-10"	2,915	0.6
13a	50'-70T	R-.90 P-.10	50'-6"	58'-0"	15'-1"	10'	CENTERED	140k	78.0k	20" CTR. CAR	40'-10"	13,517	2.8
13b	50'-70T	R-.90 P-.10	50'-6"	58'-0"	15'-1"	16'	CENTERED	140k	78.0k	20" CTR. CAR	40'-10"	3,150	0.7
14	50'-70T	R-.90* P-.10*	50'-6"	60'-5"	15'-1"	10'	CENTERED	150k	69.0k	30" CTR. CAR	40'-10"	7,079	1.5
15	50'-70T	R-.90* P-.10*	52'-6"	60'-5"	15'-6"	12'	CENTERED	134k	81.0k	20" CTR. CAR	43'-0"	4,574	1.0
16a	50'-100T	R-.90* P-.10*	50'-6"	55'-5"	15'-1"	10'	CENTERED	188k	73.0k	STD.	40'-10"	1,801	0.4
16b	50'-100T	R-.90* P-.10*	50'-6"	58'-0"	15'-1"	16'	CENTERED	188k	73.0k	20" CTR.CAR.	40'-10"	4,568	1.0
	50'-70T	R-.93 P-.07	50'-6"	54'-6"	15'-1"	9'	CENTERED	149k	63.5k	STD.	40'		
		R-.93 P-.07	50'-6"	58'-0"	15'-1"	16'	CENTERED	149k					

From Appendix A, Volume II

Appendix B contains representative lading data including: commodity or commodity group definitions, density range and average density average load conditions described by average weight per carload and average volume, annual carloads carried, average mileage per carload and total annual carload-miles for that commodity. Average and extreme load condition data is provided separately for each commodity independent car type. Correlation of representative loadings with specific design groups (i.e. DVCs) is made through use of lading codes. (See below.) Typical lading data developed for box cars is shown in Figure 2-5.

Appendix C contains (computed) engineering parameter descriptions of the 198 empty carbody configurations and 434 vehicle/lading combinations, together with codified data for correlating the appropriate truck design and representative ladings identified with each DVC. Figure 2-1 describes the format and general content of this data. Data for each mechanical car type is listed separately. For each car type the first part of Appendix C lists empty carbody data (as indicated in Figure 2-1) and codification data for truck type and representative ladings. Part 2 of this data contains load-dependent carbody parameters for each vehicle with each representative load identified with that vehicle.

Appendix D contains freight vehicle truck characterization data. Five principal truck design groups have been characterized in terms of principal masses inertias, dimensions and suspension characteristics. Table 2-6 illustrates typical data describing the 50 and 70 ton capacity truck design groups.

Appendix E contains statistical descriptions of generically similar freight vehicles. A typical family description is illustrated in Table 2-7. (The development of these families is discussed further in Section 4.3.)

Appendix F describes the composition of generically similar freight vehicle families in terms of codified data indicating constituent members. Member vheicles are described by codes indicating car type, design group (DVC) and lading group.

TABLE 2-5

BOX CAR LADING DATA SUMMARY - AVERAGE CONDITIONS

AVERAGE CONDITIONS (ANNUAL)

WEIGHT CAPACITY	LADING CODE	DENSITY RANGE (lbs/cu. ft.)	AVERAGE DENSITY (lbs/cu. ft.)	AVG. WT. /CARLOAD (kips)	AVG. VOL. /CARLOAD (cu.ft.)	NO. OF CARLOADS (x1000)	AVG. MILES /CARLOAD	TOTAL MILES (x1000)
0-120 k	1	Empty	—	—	—	—	—	1,325,183
	2	11-19	16.6	34.5	2078	686.53	780.82	536,056
	3	24-40	33.1	72.04	2176	1259.22	778.66	980,504
	4	44-60	51.6	89.58	1736	509.69	476.59	242,913
	5	61-100	97.6	54.47	558	87.48	500.58	43,791
	6	101-155	138.9	75.62	544	163.18	650.92	106,222
0-154 k	7	Empty	—	—	—	—	—	1,382,596
	8	11-19	16.6	37.32	2248	595.75	780.82	457,365
	9	24-40	33.1	91.86	2775	1271.84	778.66	990,331
	10	44-60	51.6	109.93	2130	729.84	476.59	347,834
	11	61-100	97.6	64.09	657	82.04	500.58	41,068
	12	101-155	138.9	102.67	739	239.06	650.95	155,616
0-210 k	13	Empty	—	—	—	—	—	273,215
	14	11-19	16.6	43.07	2595	98.43	780.82	76,856
	15	24-40	33.1	105.95	3201	256.91	778.66	200,046
	16	44-60	51.6	114.69	2223	154.02	476.59	73,704
	17	61-100	97.6	99.09	1015	18.73	500.58	9,376
	18	101-155	138.9	121.87	877	52.23	650.95	33,999

From Appendix B of Volume II

TABLE 2-5

BOX CAR LADING DATA SUMMARY - AVERAGE CONDITIONS
(CONTINUED)

MAXIMUM LOAD CONDITIONS (ANNUAL)

WEIGHT CAPACITY	LADING CODE	DENSITY RANGE (lbs/cu. ft.)	AVERAGE DENSITY (lbs/cu. ft.)	AVG. WT. /CARLOAD (kips)	AVG. VOL /CARLOAD (cu.ft.)	NO. OF CARLOADS (x1000)	AVG. MILES /CARLOAD	TOTAL MILES (x1000)
0-120 k	19	11-19	16.6	106	6386	36.09	780.82	28,178
	20	24-40	33.1		3202	371.31	778.66	289,124
	21	44-60	51.6		2054	316.22	476.59	150,707
	22	61-100	97.6		1086	27.88	500.58	13,956
	23	101-155	138.9		763	53.32	650.95	34,709
0-154 k	24	11-19	16.6	138	8313	15.97	780.82	12,470
	25	24-40	33.1		4169	226.77	778.66	176,577
	26	44-60	51.6		2674	306.84	476.59	146,237
	27	61-100	97.6		1414	9.45	500.58	4,731
	28	101-155	138.9		994	103.69	650.95	67,497
0-210 k	29	11-19	16.6	196	11807	1.94	780.82	1,515
	30	24-40	33.1		5921	8.22	778.66	6,401
	31	44-60	51.6		3798	10.77	476.59	5,133
	32	61-100	97.6		2008	2.94	500.58	1,472
	33	101-155	138.9		1411	3.84	650.95	2,500

DENSITY lbs/cu.ft.	CHARACTERISTIC COMMODITIES
--	Empty Car Code
11-19	Furniture, Textiles, Tobacco Products, Rubber & Plastic Products, Transportation Equipment
24-40	Food & Kindred Products, Lumber, Pulp & Paper Machinery
44-60	Field Crops, Chemicals, Stone, Clay, Glass
61-100	Non-Metallic Minerals, Fabricated Metal Products
101-155	Metallic Ores, Primary Metal Products, Waste & Scrap

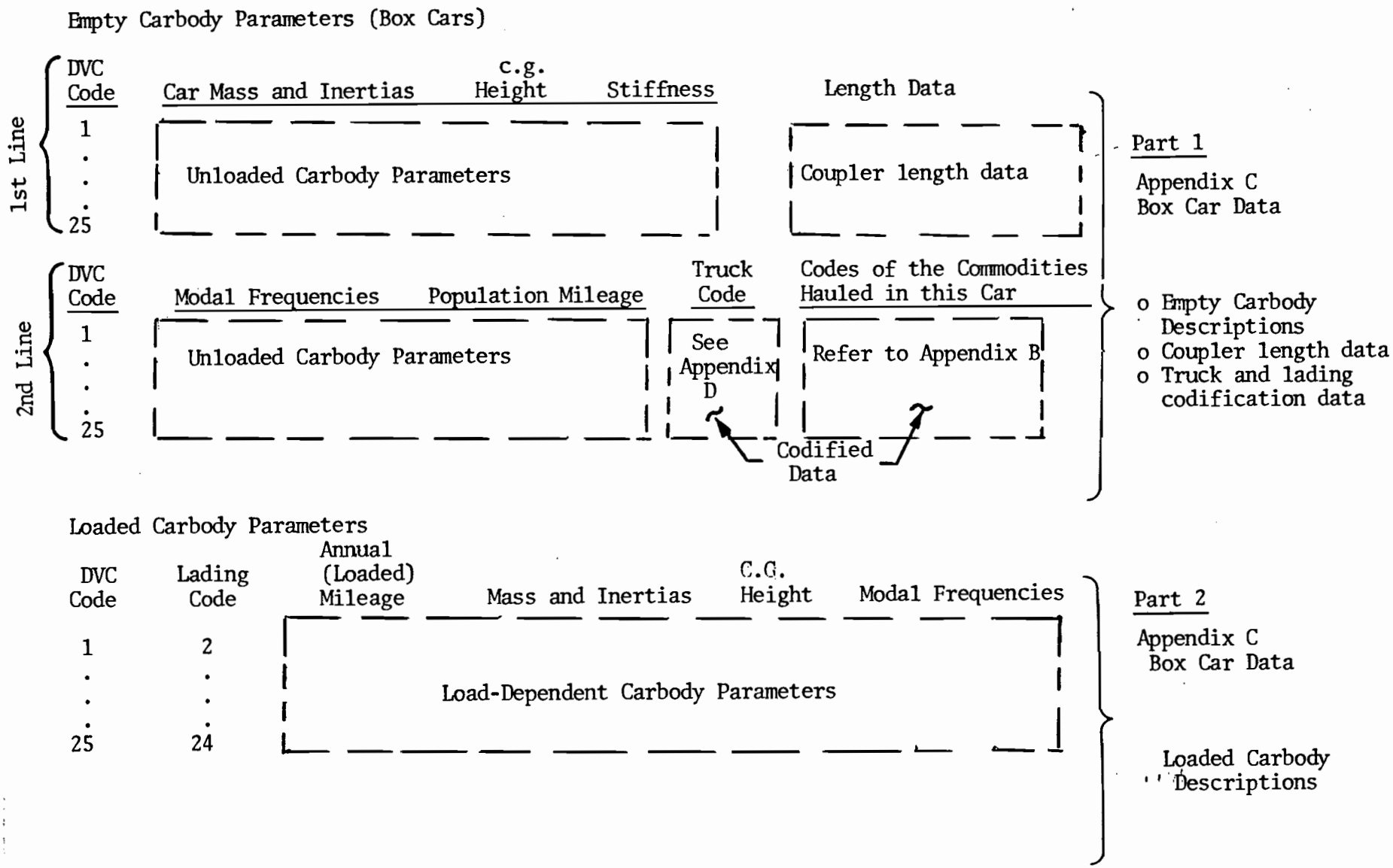

FIGURE 2-1. Typical Organization of Carbody Data in Appendix C

TABLE 2-6. FREIGHT CAR TRUCK PARAMETERS

I. GENERAL FAMILY DESCRIPTORS AND COMPOSITION

Family No.	1	2
Descripton (Classification)	50-ton	70-ton
Assembled Weight/Pair	13,830 lbs.	16,310 lbs.

II. ENGINEERING PARAMETER DESCRIPTION OF FAMILIES

	PARAMETER	VALUE	VALUE	NOTES
MASS & INERTIA	Mass: Complete Truck	17.9	21.1	mass units
	One Sideframe	1.7	2.1	$lb\text{-}sec^2/in.$
	Bolster	2.2	2.7	
	Wheelset (axle-2 wheels)	5.0	5.6	
	Center of Mass (in.)	17.1	17.5	complete truck-above of rail — word missing
	Yaw Moment of Inertia w/bolster	30,400	35,950	complete truck-about center of mass; $lb\text{-}sec^2\text{-}in$ (typical)
	Yaw Moment of Inertia w/o bolster	29,400	34,740	
	Pitch Moment of Inertia w/bolster	14,590	18,050	
	Pitch Moment of Inertia w/o bolster	15,660	19,180	about centerplate
	Roll Moment of Inertia w/bolster	17,190	19,590	
	Roll Moment of Inertia w/o bolster	17,280	19,600	about centerplate
SPRING & MEMBER STIFFNESS	Bolster to Sideframe -Vertical Stiffness	(D-3,4) 48,730	(D-5) 47,130	2 spring groups lb/in. (typical)
	-Lateral Stiffness empty car	9,510	7,160	
	-Lateral Stiffness loaded car	24,030	18,810	
	Bolster to Sideframe -Roll Stiffness	72.2×10^6	71.7×10^6	springs only in-lb/rad. (typical)
	-Yaw Stiffness empty car	14.1×10^6	10.9×10^6	
	-Yaw Stiffness loaded car	35.6×10^6	28.6×10^6	
	-Pitch Stiffness	4.38×10^5	7.94×10^5	
	Sideframe to Wheelset -Vertical Stiffness	5.46×10^6	6.26×10^6	bending of two sideframes lb/in.
	-Lateral Stiffness	652,000	800,000	bending of one sideframe lb/in.
COMPLETE TRUCK STIFFNESS (INCL. STRUCTURAL COMPLIANCE)	Centerplate to Rail -Vertical Stiffness (springs, bolster, sideframes)	47,250	45,930	lb/in. (typical) prior to solid springs
	-Vertical Stiffness (bolster, sideframes)	1.558×10^6	1.797×10^6	solid springs
	-Lateral Stiffness (springs, sideframes)	9,440 23,600	7,130 18,590	-empty car -car loaded to capacity prior to gib contact
	-Lateral Stiffness (one sideframe only)	652,000	800,000	after gib contact
	Centerplate to Rail -Roll Stiffness (springs, bolster, sideframes)	70.0×10^6	69.5×10^6	in-lb/rad. (typical) prior to solid springs
	-Roll Stiffness (bolster, sideframes)	2.31×10^9	2.73×10^9	solid springs
	Centerplate to Rail -Yaw Stiffness	2.2×10^9	3.3×10^9	in-lb/rad. (typical) bolster, sideframes only
	-Pitch Stiffness	482.0×10^6	574.0×10^6	bolster, sideframes only
	Bolster Vertical Stiffness	2.18×10^6	2.52×10^6	lb/in.
FRICTION DAMPING	Lineal Damping/Friction Bolster to Sideframe -Vertical	0.5	0.5	average coefficient of sliding friction
	-Lateral	0.37	0.37	

From Appendix D of Volume II

TABLE 2-6. FREIGHT CAR TRUCK PARAMETERS (CONTINUED)

	Family No.	1	2	
	PARAMETER	VALUE	VALUE	NOTES
FRICTION DAMPING & COLUMN LOADS	Centerplate Yaw Friction -Dry Surface -Teflon Surface	 2.1 .41	 2.4 .41	torsional resistance/ vertical load in-lb/lb. (typical)
	Column Load - Constant (4/truck) lbs.	(D-3) 3130 (D-4) 2360	(D-5) 4040	nominal force acting on one sideframe column
	Column Load - Variable (4/truck) lbs.	N/A	(D-5) 1472 3430	-empty car) -loaded car) one column
CLEARANCES	Bolster to Sideframe -Vertical Clearance	5.69	5.75	solid springs in.
	-Lateral Clearance (average worn condition) (range) (standard deviation)	 0.75 .375 - 1.125 0.125	 1.10 0.70 - 1.5 0.135	in.
	-Longitudinal Clearance (average worn condition) (range) (standard deviation)	 ±0.19 .064 - .316 0.042	 ±0.22 .061 - .375 0.053	in.
	Sideframe to Axle Yaw Clearance	9.8/4.5	7.2/3.4	(max/min) degrees, roller bearings
	Centerplate-Bolster Bowl Net Clearance	0.5/0.25	0.5/0.25	(max./min.) in.
	Side Bearing Clearance (average worn condition) (range) (standard deviation)	 0.25 .125 - .375 0.042	 0.25 .125 - .375 0.042	in.
DIMENSIONS	Wheelbase Distance	66.0	68.0	in.
	Wheel Diameter	33.0	33.0	nominal at tape line (in.)
	Distance Between Outside Face of Wheels	64.19	64.19	average nominal condition (in.)
	Bolster Bowl Diameter	12.0	14.0	new nominal condition (in.)
	Center Pin Height	8.0	8.0	above bowls bottom surface (in.)
	Rail to Bolster Bowl Wear Surface Height	25.75	25.75	empty car on truck (in.)
	Side Bearing Distance from Longitudinal Centerline	25.0	25.0	(in.)

Notes:

1. Non-linear with vertical loading
2. Wear conditions are estimated by assuming normally distributed user between a new, unworn condition and the condemmable limit on wear as specified in the AAR Interchange Rides.
3. Spring travel by spring group

Spring group	Spring travel (free to solid height)
D-3	2 1/2
D-4	3 1/16
D-5	3 8/16
D-6	3 3/8

TABLE 2-7. TABULATION OF GENERIC FAMILY DESCRIPTIONS FOR FREIGHT VEHICLES

PART A. GENERAL FAMILY DESCRIPTORS AND COMPOSITION

GENERIC FAMILY NO.		1	2
FAMILY DESCRIPTORS		50-Ton, Short, High C.G., Light Weight Stiff Body	50-Ton, Short, High C.G., Medium Heavy Stiff Body
DESCRIPTOR	TRUCK CENTER SPACING	18 to 28 feet	18 to 28 feet
RANGES	C.G. HEIGHT (EX. TRUCKS)	62 to 95 inches	75 to 99 inches
	GROSS WEIGHT (EX. TRUCKS)	26 to 53 kips	80 to 151 kips
	VERTICAL FREQUENCY	Above 10 Hz	Above 10 Hz
MAJOR VEHICLES CONSTITUTING FAMILY AND APPROXIMATE LOAD CONDITION		Open Hopper (E) Tank Car (E)	Open Hopper (L) Tank Car (L)
ANNUAL MILES TRAVELED BY FAMILY		4.31×10^8 miles	4.27×10^8 miles
PERCENT OF TOTAL MILEAGE		1.776%	1.760%
FAMILY CLASSIFICATION		1.1.1.1.1	1.1.2.1.1

PART B. ENGINEERING PARAMETER DESCRIPTIONS OF FAMILIES, IN TERMS OF NOMINAL MILEAGE WEIGHTED VALUE AND RELATED STATISTICS

PARAMETER DESCRIPTION (UNITS: IN-LB-SEC)	MEAN VALUE	STD. DEV.	RANGE	MEAN VALUE	STD. DEV.	RANGE
CARBODY MASS ($LB\text{-}SEC^2\text{-}IN$)	92.00	24.03	137.20 67.30	300.74	57.00	390.79 205.95
CARBODY YAW MOMENT OF INERTIA $\times 10^5$	15.26	4.46	24.67 8.06	38.07	8.11	54.09 19.47
CARBODY PITCH MOMENT OF INERTIA $\times 10^5$	14.99	4.58	24.69 8.07	37.42	8.13	54.09 19.48
CARBODY ROLL MOMENT OF INERTIA $\times 10^4$	19.51	6.11	36.93 10.34	51.95	27.73	99.25 19.87
CARBODY C.G. HEIGHT ABOVE RAILS	76.53	9.36	95.20 62.00	81.77	5.78	99.06 74.84
STATIC VERTICAL BENDING STIFFNESS $\times 10^5$	143.65	162.06	795.67 40.19	138.94	159.85	795.67 40.18
STATIC LATERAL BENDING STIFFNESS $\times 10^5$	139.90	164.45	795.67 28.63	134.78	162.40	795.67 28.63
STATIC TORSIONAL STIFFNESS $\times 10^7$	688.10	571.55	2105.00 1.20	655.17	577.05	2105.00 1.20
VERTICAL BENDING FREQUENCY (Hz)	79.92	29.18	175.50 45.50	44.72	19.56	100.45 21.95
LATERAL BENDING FREQUENCY (Hz)	77.56	31.63	175.50 35.60	43.55	20.90	100.45 18.54
TORSIONAL BENDING FREQUENCY (Hz)	83.32	54.57	153.70 2.80	57.47	40.80	108.30 1.74
LENGTH BETWEEN TRUCK CENTERS (inches)	298.71	29.59	336.00 216.00	298.54	28.90	336.00 216.00
LENGTH BETWEEN COUPLER PINS (inches)	390.82	32.02	433.40 313.40	390.07	31.44	433.40 313.40
LENGTH OF COUPLER (inches)	29.3	—	29.3	29.3	—	29.3

From Appendix E, Volume II

Appendices G, H, I,J contain passenger and locomotive carbody and truck descriptions which are discussed in Section 3.0

Appendix K contains descriptions of some representative wheel profile wear patterns measured on in-service freight vehicles.

2.3 DIRECTORY TO FREIGHT VEHICLE CHARACTERIZATION DATA

To facilitate the use of this data in assembling engineering parameter descriptions of freight vehicles for computer simulation modeling or for other purposes, the following data directory has been constructed to: (a) provide a detailed tabulation and description of the data included; (b) supplement engineering parameter descriptions with drawings or schematic representations as required; and, (c) provide rapid access to key data elements contained in the various appendices. The directory is organized into the following parts:

- Part I Carbody General Descriptors and Dimensional Data
- Part II Load Dependent Carbody Parameters
- Part III Carbody Bending and Torsional Stiffness Data
- Part IV Representative Lading Data
- Part V Carbody/Truck Interface Data
- Part VI Freight Truck Data
  - a - General
  - b - Masses and Inertias
  - c - Spring Group Stiffnesses and Friction Damping
  - d - Dimensions and Clearances
  - e - Bolster and Sideframe Bending Stiffnesses
  - f - Complete Truck Stiffness

Part I Carbody General Descriptors and Dimensional Data

Symbol	Descriptor	Units	Reference Figure	Data Location (Appendix)
-	DVC population	-	-	A,C
-	DVC annual mileage estimate (empty)	10^3 miles	-	C
-	DVC, % of mechanical car type	-	-	A
-	DVC truck code	-	-	C
-	DVC, % roller vs plain bearings (est.)	-	-	A
-	Nominal weight capacity	10^3 lbs	-	A
-	Nominal volumetric capacity	ft^3/gal [a]	-	A
-	Lightweight (carbody plus carset of trucks)	10^3 lbs	-	A

[a]Tank car volumetric capacity in gallons.

Part I (Carbody General Descriptors and Dimensional Data)

Symbol	Descriptor	Units	Reference Figure	Data Location (Appendix)
-	Door type (centered or staggered	-	-	A
XD	Door width	ft, in	2-2	A
XIL	Inside length	ft, in	2-2	A
XTCS	Truck center spacing	ft-in/in	2-2	A/C
XPC	Length between coupler pins	in	2-2	C
XCL	Coupler length (pin to pulling face)	in	2-2	C
XPF	Length between coupler pulling faces	in	2-2	C
XDG	Standard draft gear travel	in	2-2	-
XEH	Extreme height	ft, in	2-2	A
SPH	Platform height (flatcars only)	ft, in	2-2	A
XCS	Center sill travel from centered position	in	2-2	A
XEC	End cushion travel from nominal position	in	2-2	A

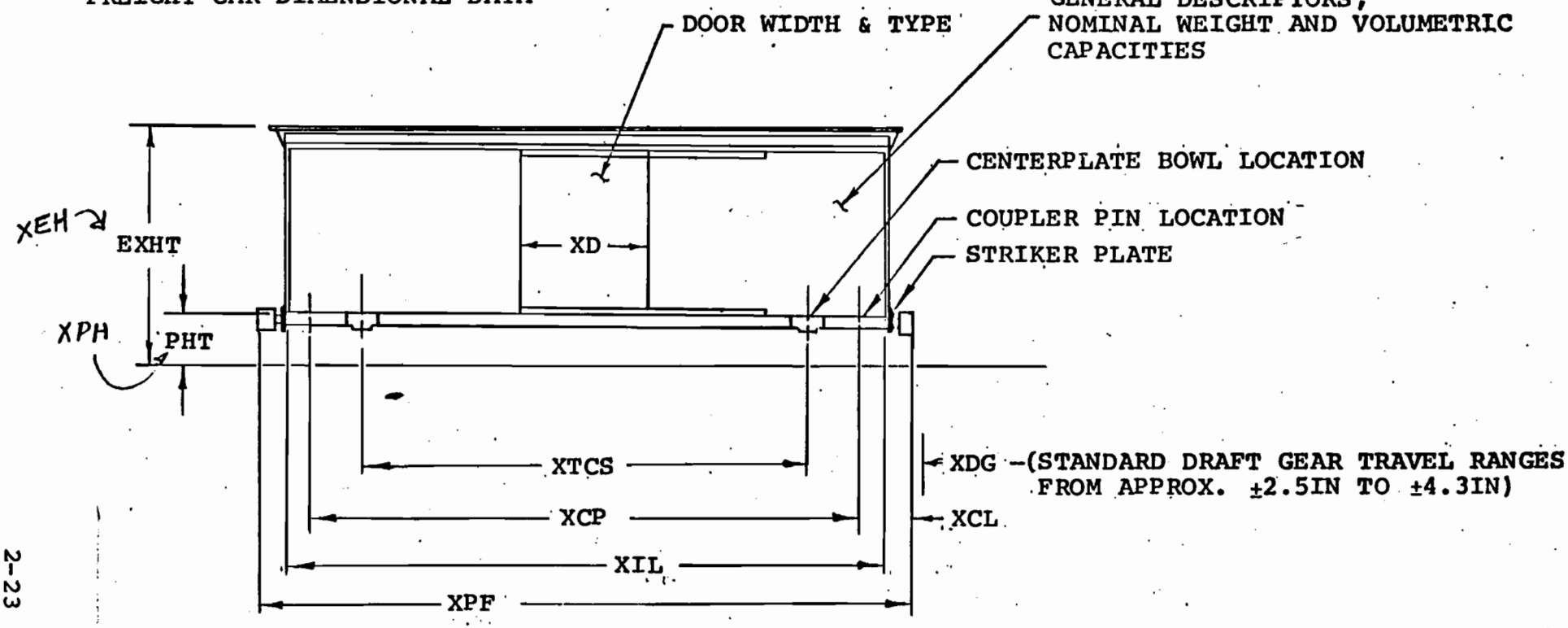

(a) DIMENSIONAL DATA & GENERAL DESCRIPTORS

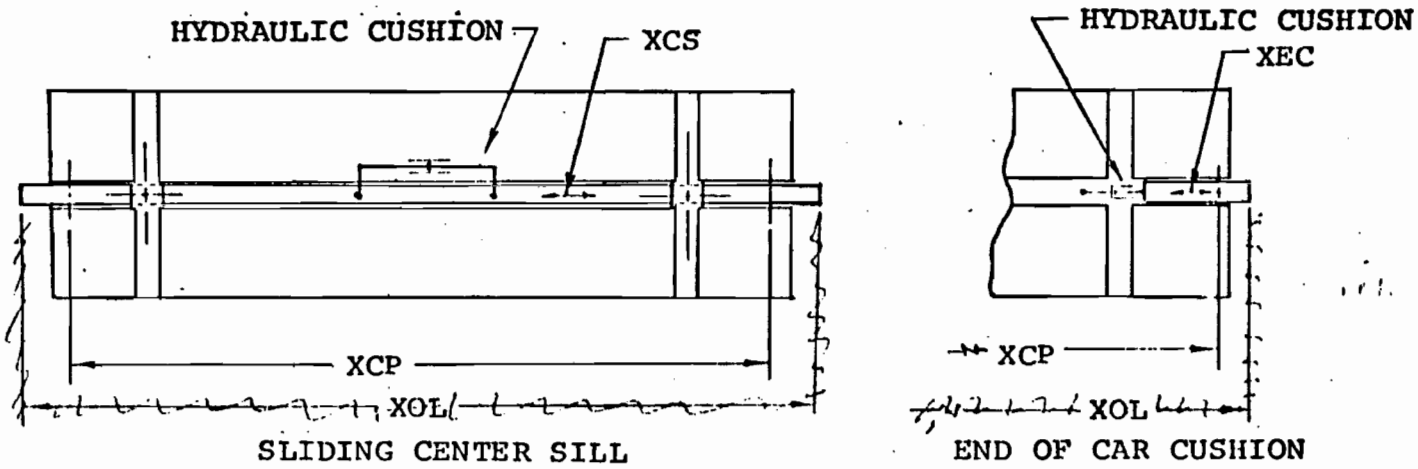

(b) CARBODY CUSHIONING SYSTEMS

FIGURE 2-2. FREIGHT CAR DIMENSIONAL DATA

Part II Load Dependent Carbody Data (Masses and Inertias)[a]

Symbol	Descriptor	Units	Reference Figure	Data Location (Appendix)
LC	Lading codes, each DVC (1 to 6)	-	2-3	C
MC	Composite carbody lading mass	(lb sec^2/in)	2-3	C
YCG	C.G. height of carbody/lading above rail	(in)	2-3	C
I_p	Carbody/lading pitch moment of inertia	(in-lb-sec^2)	2-3	C
I_y	Carbody/lading yaw moment of inertia	(in-lb-sec^2)	2-3	C
I_r	Carbody/lading roll moment of inertia	(in-lb-sec^2)		
f_v	Carbody/lading vertical bending mode freq	(Hz)	2-3	C
f_ℓ	Carbody/lading lateral bending mode freq	(Hz)	2-3	C
f_t	Carbody/lading torsional frequency	(Hz)	2-3	C

[a] Refer to Figure 2-1 for typical organizations of load-dependent carbody

LOAD DEPENDENT CARBODY PARAMETERS

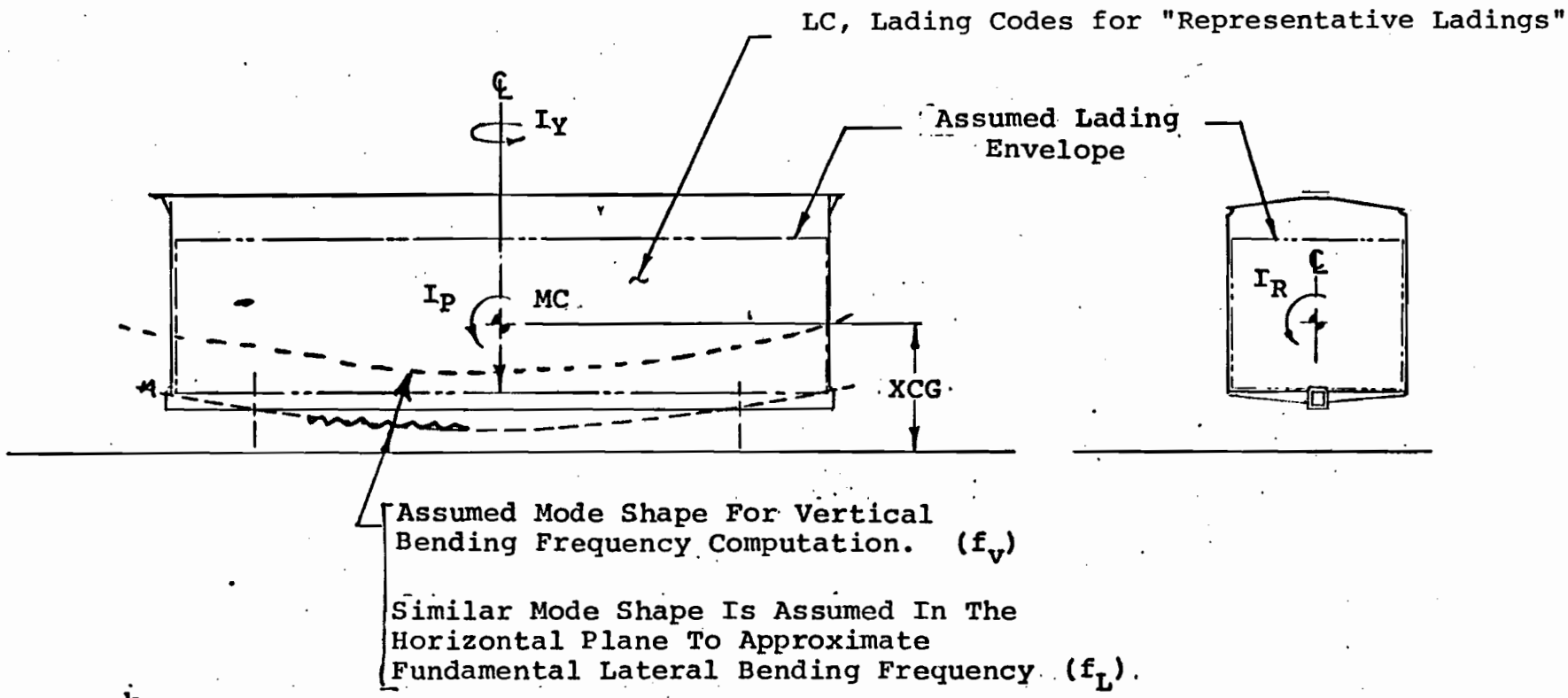

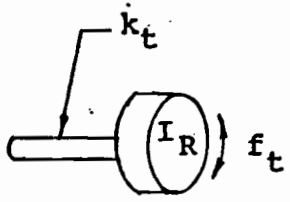

Single DOF Approximation Used in Estimating Carbody Torsional Frequency (f_t)

Note: C.G. Height is for loaded or unloaded carbodies only and is referenced to top of rail. For loaded cars c.g. heights do not consider vertical spring deflection of the truck due to weight of loads. (These deflections are generally small and typically range between 0.2 and 2 inches.)

FIGURE 2-3. LOAD DEPENDENT CARBODY PARAMETERS

Part III Carbody Bending and Torsional Stiffnesses

Symbol	Descriptor	Units	Reference Figure	Data Location (Appendix)
k_v	Vertical Bending Stiffness	lb/in	-	C
k_ℓ	Lateral Bending Stiffness	lb/in	-	C
k_t	Torsional Stiffness	in/lb/rad	-	C

Part IV Representative Lading Data

Lading code; density range; average density, weight per carload; volume per carload; number of ? ; average miles per carload; total mileage; commodity group definitions.	-		Data Location (Appendix) ?

Part V Carbody Truck Interface

Symbol	Descriptor	Units	Reference Figure	Data Location (Appendix)
f_{cp}	Centerplate yaw friction (break-away torque)	in-lb/lb	2-4	D
-	Bolster bowl diameter	in	2-4	D
-	Centerplate/bolster bowl clearance*	in	2-4	D
δ_{sb}	Side bearing clearance	in	2-4	D
XSB	Side bearing distance from $\mathcal{C}_L$	in	2-4	D
XCPH	Centerpin height above bolster bowl	in	2-4	D
XBBH	Rail to bolster bowl wear surface height	in	2-4	D

Part VI Freight Truck Data

a. General

Symbol	Descriptor	Units	Reference Figure	Data Location (Appendix)
-	Truck capacity	tons	-	D
-	Assembled weight per pair	lbs	-	D

b. Masses and Inertias

MT	Truck mass (complete truck)	lb sec^2/in	2-5	D
MSF	Mass of one sideframe	lb sec^2/in	2-5	D
MB	Bolster mass	lb sec^2/in	2-5	D

* i.e., Difference in diameters.

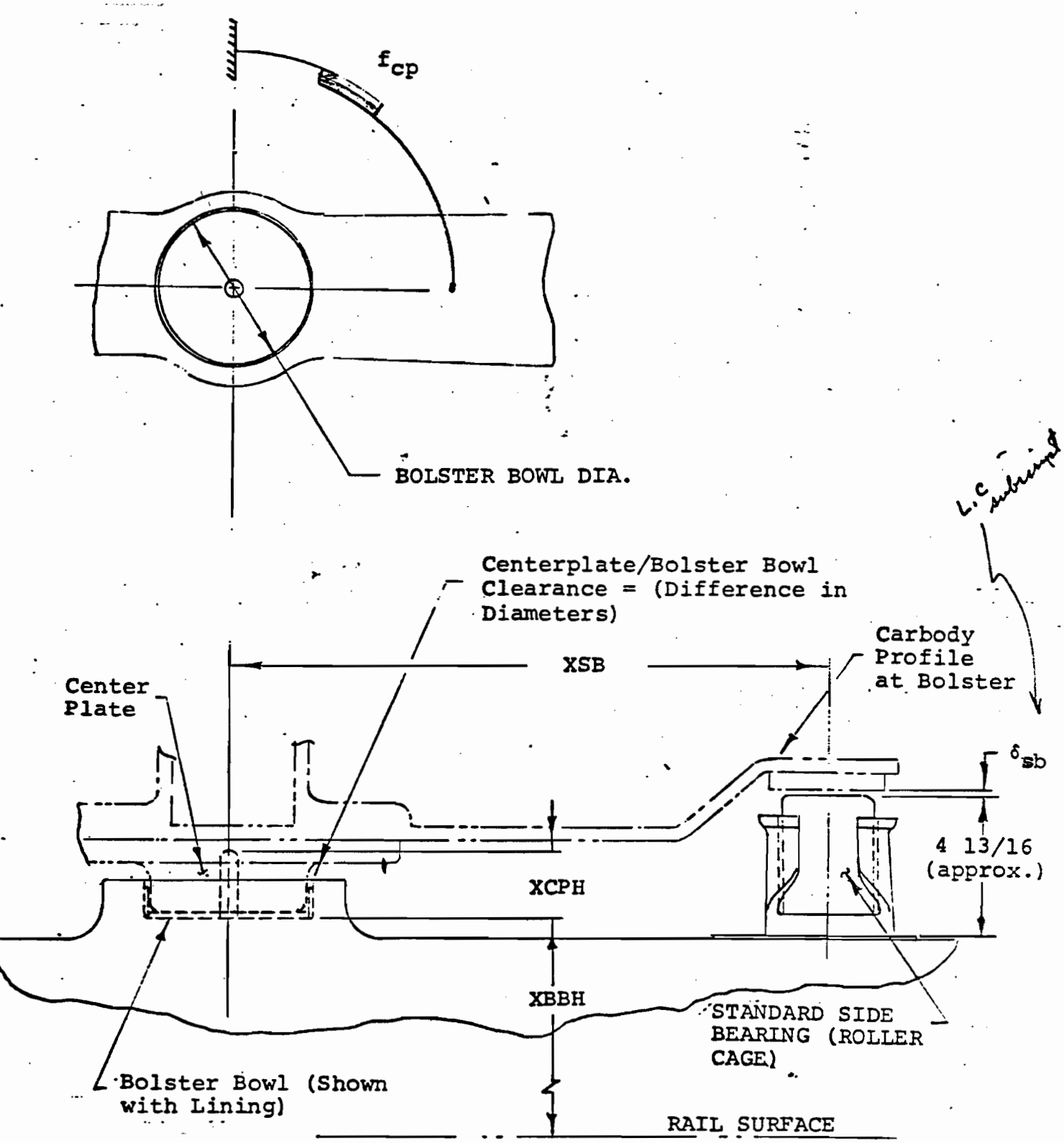
f_{cp}
BOLSTER BOWL DIA.
L.C. subtracted
Centerplate/Bolster Bowl Clearance = (Difference in Diameters)
XSB
Carbody Profile at Bolster
Center Plate
δ_{sb}
4 13/16 (approx.)
XCPH
XBBH
STANDARD SIDE BEARING (ROLLER CAGE)
Bolster Bowl (Shown with Lining)
RAIL SURFACE

FIGURE 2-4

b. Masses and Inertias (Continued)

Symbol	Descriptor	Units	Reference Figure	Data Location (Appendix)
MWS	Wheelset mass (axle and two wheels)	lb sec^2/in	2-5	D
IT_y	Truck ass'y yaw inertia about truck c.g.	lb sec^2/in	2-5	D
IT_p	Truck ass'y pitch inertia about truck c.g.	lb sec^2/in	2-5	D
IT_r	Truck ass'y roll inertia about truck c.g.	lb sec^2/in	2-5	D
-	Truck ass'y yaw inertia without bolster (a)	lb sec^2/in	-	D
-	Truck ass'y pitch inertia without bolster (a)	lb sec^2/in	-	D
-	Truck ass'y roll inertia without bolster (a)	lb sec^2/in	-	D
c. Spring Group Stiffnesses and Friction Damping				
k_v	Bolster to sideframe vertical stiffness (per truck) (b)	lb/in	2-5	D
k_ℓ	Bolster to sideframe lateral stiffness (per truck)(b,c)	lb/in	2-5	D
k_r	Bolster to sideframe roll stiffness (per truck)(d)	in lb/rad	2-5	D
k_y	Bolster to sideframe yaw stiffness (per truck)	in lb/rad	2-5	D
k_p	Bolster to sideframe pitch stiffness (per truck)(e)	in lb/rad	2-5	D
μ_v	Bolster to sideframe vertical function damping coefficient (f)	-	2-6	D
μ_ℓ	Bolster to sideframe lateral function damping coefficient (f)	-	2-6	D
F_c	Column Load, constant load (one column) (g)	lbs	2-6	D
$F_c(\delta)$	Column load variable with bolster deflection (g)	lbs	2-6	D

(a) Axis located at centerplate/bolster bowl surface location (not at truck center of mass)
(b) Two spring groups per truck, one at each sideframe.
(c) Varies non-linearly with bolster deflection.
(d) Computed from 1/4 $K_v L^2$ where L is the lateral distance between vertical spring groups. (approximately 78 inches)
(e) Rotation of bolster only, with respect to sideframe
(f) Average coefficient of sliding friction.
(g) Two columns per side frame, four columns per truck.

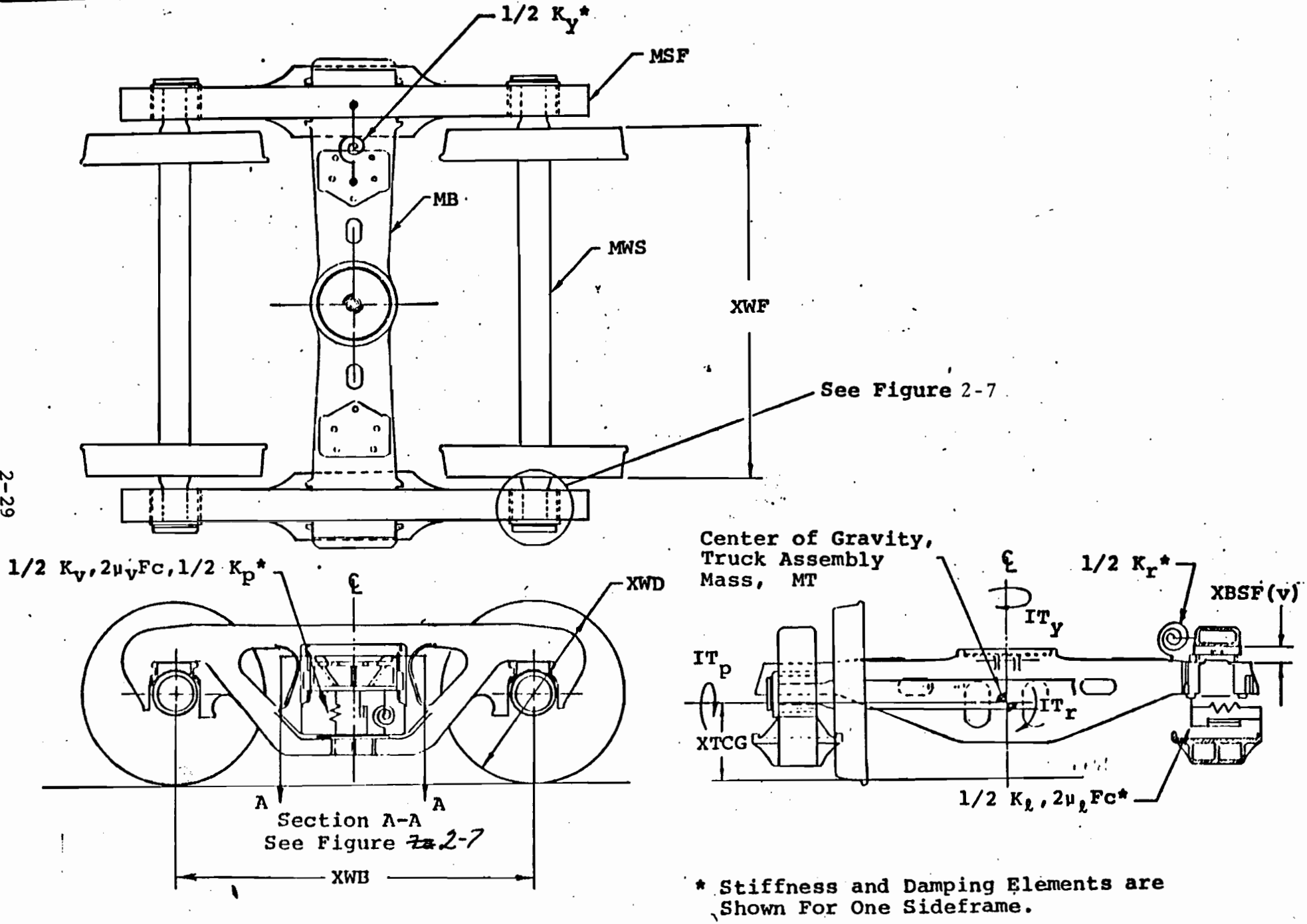

* Stiffness and Damping Elements are Shown For One Sideframe.

FIGURE 2-5

d. Dimensions and Clearances

Symbol	Descriptor	Units	Reference Figure	Data Location (Appendix)
XWB	Wheelbase	in	2-5	D
XWD	Wheel diameter	in	2-5	D
XWF	Distance between outside faces of wheels	in	2-5	D
XBSF(v)	Bolster/sideframe vertical clearance (solid springs) (a)	in	2-5	D
(XBSF(ℓ))	Bolster/sideframe lateral clearance (total gib travel) (b)	in	2-7	D
XBSF (long.)	Bolster/sideframe longitudinal clearance (b)	in	2-7	D
ψTAX	Sideframe to axle yaw clearance	deg.	2-7	D
XTCG	Assembled truck c.g., height above rails	in	2-5	D

e. Bolster and Sideframe Bending Stiffnesses

KB	Bolster vertical bending stiffness	lb/in	2-8	D
KSF_v	Vertical bending stiffness of two sideframes	lb/in	2-8	D
KSF_ℓ	Lateral bending stiffness of one sideframe	lb/in	2-8	D

f. "Complete Truck Stiffnesses" (Spring group, and component bending stiffness)

TVS(1)	"Truck vertical stiffness" before springs bottom	lb/in	2-9	D
TVS(2)	"Truck vertical stiffness" solid springs	lb/in	2-9	D
TLS(1)	"Truck lateral stiffness" empty (c) (prior to gib contact)	lb/in	2-9	D
TLS(2)	"Truck lateral stiffness" full load (prior to gib contact (c)	lb/in	2-9	D
TLS(3)	"Truck lateral stiffness" after gib contact	lb/in	2-9	D

(a) Nominal value, may vary with different spring groups. See ___ .
(b) Average worn condition.
(c) Varies non-linearly with bolster deflection.

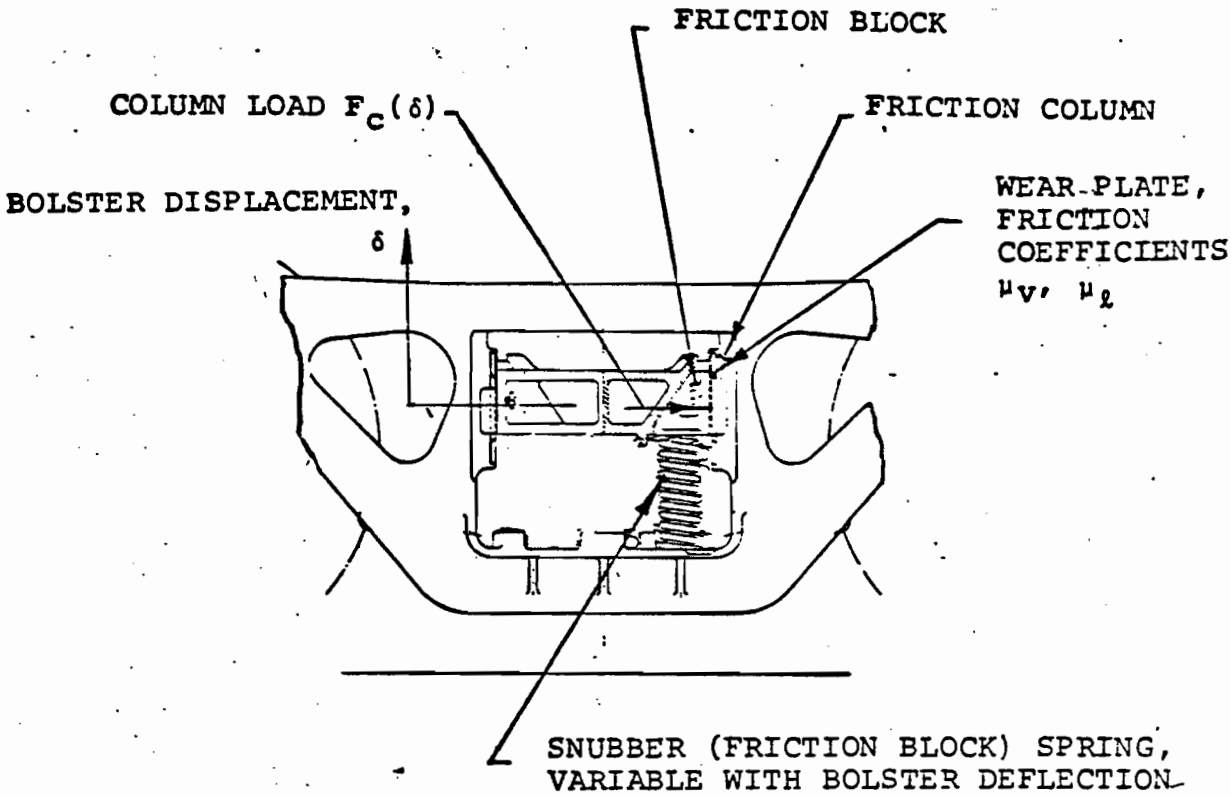

(a) VARIABLE FRICTION DAMPING CONFIGURATION

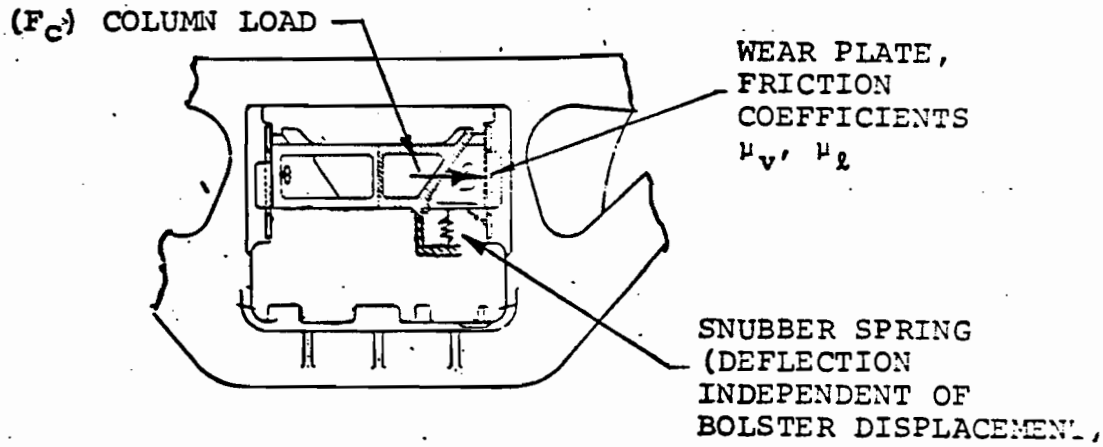

(b) CONSTANT FRICTION DAMPING CONFIGURATION SCHEMATIC REPRESENTATION

FIGURE 2-6. VERTICAL AND LATERAL FRICTION DAMPING MECHANISM

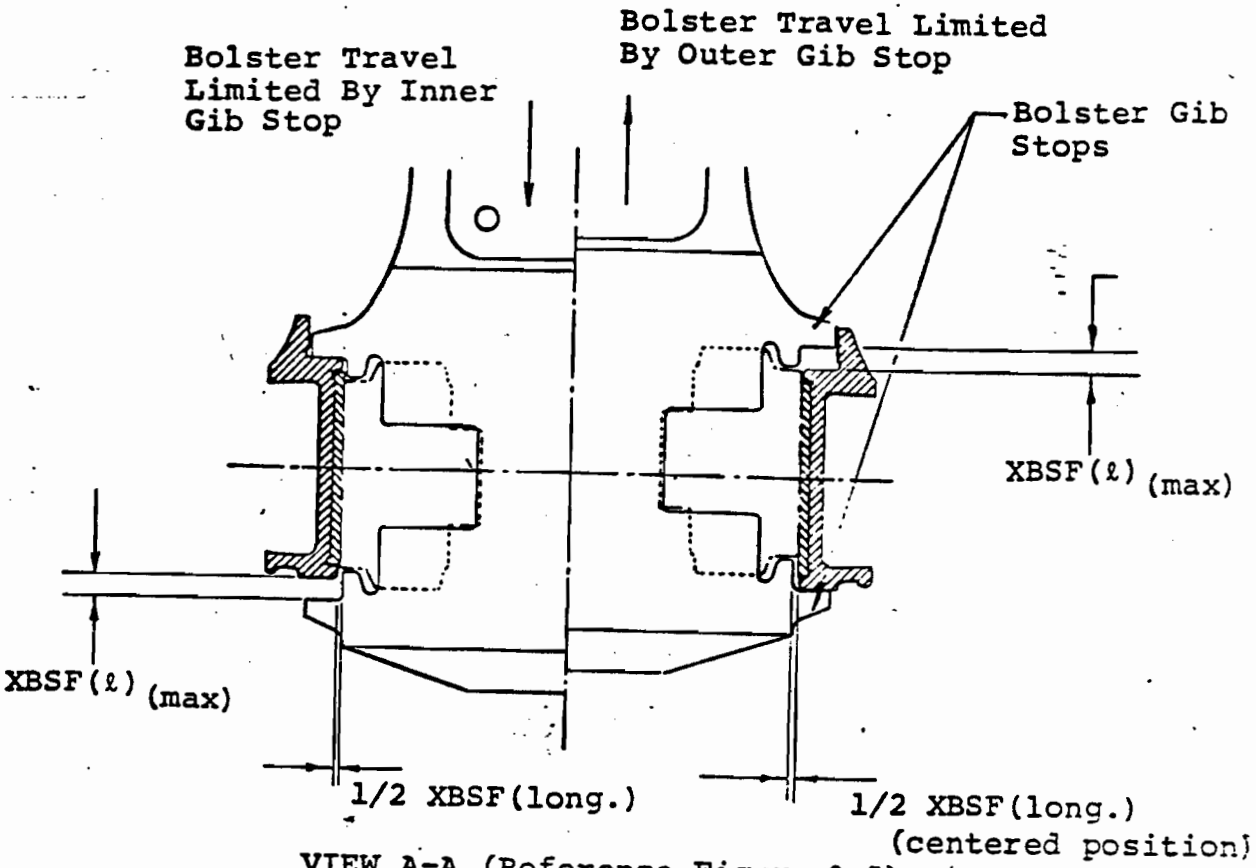

VIEW A-A (Reference Figure 2-5)

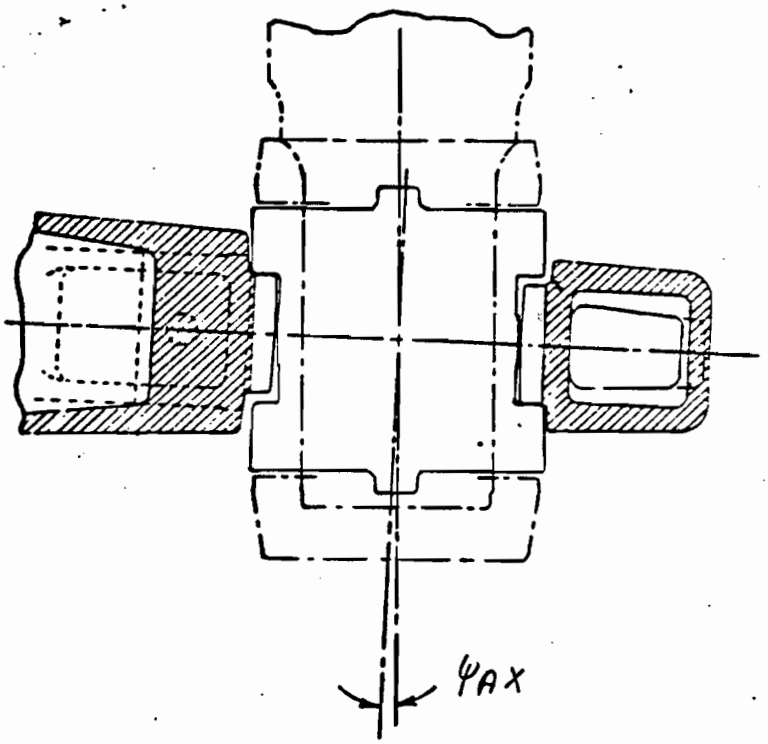

VIEW B-B (Reference Figure 2-5)

FIGURE 2-7

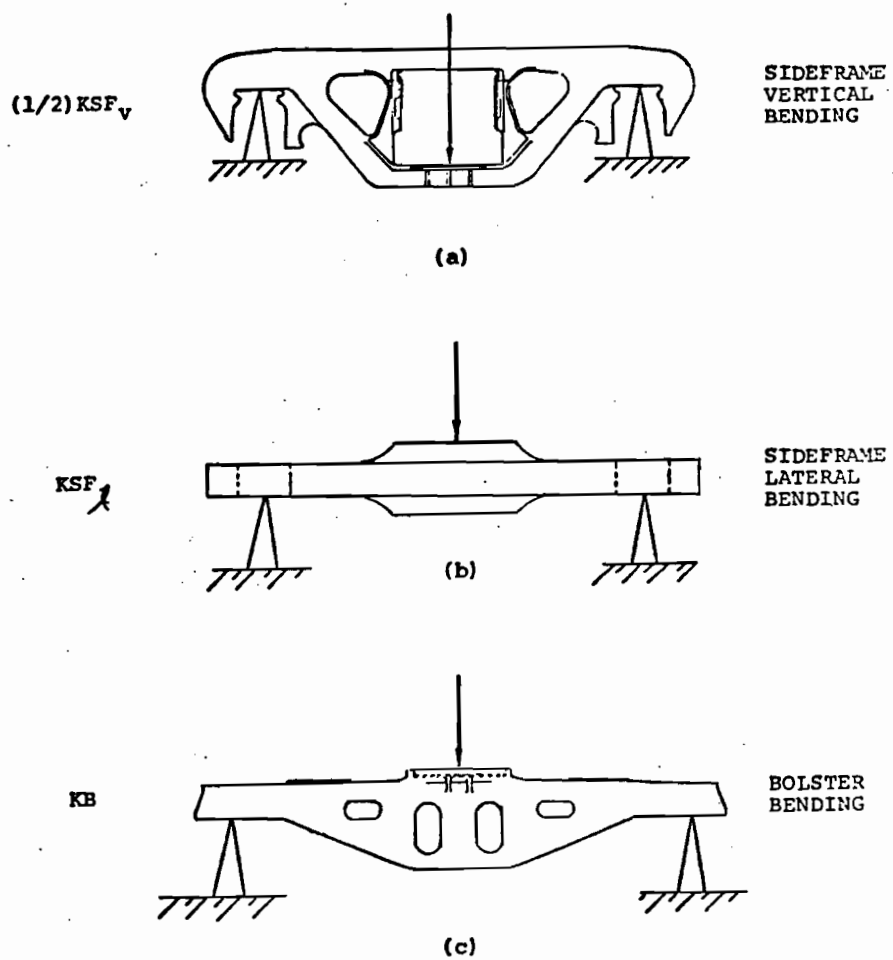

FIGURE 2-8.

CENTERPLATE TO RAIL STIFFNESSES (VERTICAL STIFFNESS)

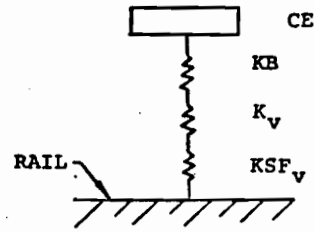

$$TVS(1) = \frac{\left(\frac{(KB)(K_V)}{KB + K_V}\right) KSF}{\left(\frac{(KB)(K_V)}{KB + K_V}\right) + KSF}$$

BEFORE SPRING GROUPS BOTTOM OUT

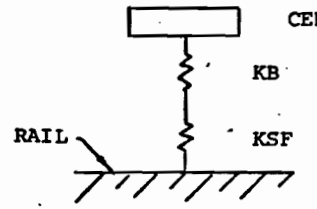

$$TVS(2) = \frac{(KB)(KSF)}{KB + KSF}$$

AFTER SPRING GROUPS BOTTOM OUT

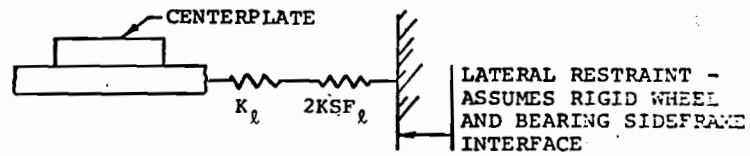

$$TLS(1) = \frac{(K_\ell)(2KSF_\ell)}{K_\ell + 2KSF_\ell}$$ (USING K_ℓ FOR EMPTY CAR)

TLS(2) = SIMILAR TO TLS(1), (USING K_ℓ FOR LOADED CAR)

TLS(3) = KSF_ℓ (LATERAL BENDING STIFFNESS OF ONE SIDEFRAME AFTER BOLSTER GIB CONTACT)

CENTERPLATE TO RAIL LATERAL STIFFNESS (COMPLETE TRUCK)

FIGURE 2-9.

2.3.1 Assembling Data for Freight Vehicle Simulation Modeling: Illustrative Example

The following example illustrates how the data described above may be used to assemble vehicle and truck parameters for use in a harmonic roll analysis of a 4700 cu. ft., 100 ton covered hopper car with a truck center spacing of 45 ft. Empty and loaded carbody descriptions are desired for simulation modeling.

Table 2-8 contains a list of carbody and truck data required for a digital computer simulation model to predict the rocking response of freight cars to track cross-level variations. [11]. This model, shown schematically in Figure 2-10, has full carbody with lateral, vertical, roll, yaw and pitch degrees of freedom. The truck, in this reduced complexity simulation, is represented as a massless frame which transmitts forces and moments from the wheelsets to bolsters. The bolster has vertical, lateral and roll degrees of freedom while the wheelset may stay in contact with the rails or rotate about one point of contact while the opposite wheel lifts off the rail. The truck mass is distributed between the carbody and an "equivalent wheelset" mass. The two bolsters are lumped with the carbody mass and the two wheelset masses in front and rear trucks are lumped together into an "equivalent wheelset mass." The mass of the sideframes which typically accounts for about 20% of the complete truck mass, is neglected in this example formulation, while truck suspension stiffnesses, clearances and friction damping characteristics are modeled in relative detail.

A system of non-linear equations is developed to represent each principal mode of carbody/bolster relative position and wheel lift conditions for a freight vehicle excited by crosslevel track geometry inputs. These equations are solved iteratively to determine carbody roll motions and wheel lift conditions. A comprehensive description of model formulation and numerical integration procedures is contained in [11].

In order to assemble parameters for the covered hopper car previously described it is necessary to link the description of this car with those of the covered hopper car design groups described in Appendix A using the general carbody descriptors specified (i.e. volumetric capacity, truck center spacing and carbody weight class. From Appendix A page A-6 it can be seen that covered hopper car No. 11, a nominal 4,750 cu ft 100 ton carbody with a truck center spacing of 45 ft 5 in, closely approximates the desired car in terms of the

TABLE 2-8. LOADED AND UNLOADED PARAMETERS FOR COVERED HOPPER CAR

Car Parameter	Value	Location (Appendices)	Conversion Factor	Comments
Weight of Car Body and Two Bolsters for Loaded Car [lb]...	243,000	C,D	.386	
Empty Car [lb]...	44,000	C,D	.386	
Weight of "Equivalent" Wheelset [lb].....	5,180	D	.386	Weight of two wheelsets
Roll Moment of Inertia of Car Body for				
Loaded Car [lb-in-sec^2].....	187.3×10^4	C	-	
Empty Car [lb-in-sec^2]	34.2×10^4	C	-	
Pitch Moment of Inertia of Car Body				
Loaded Car]lb-in-sec^2].....	298×10^5	C	-	
Empty Car [lb-in-sec^2].....	43.3×10^5	C	-	
Yaw Moment of Inertia of Car Body				
Loaded Car [lb-in-sec^2].....	178×10^5	C	-	
Empty Car [lb-in-sec^2].....	43.4×10^5	C	-	
Suspension Spring Vertical Rate [lb/in^2]				
Loaded Car.....	27,300	D	0.5	Per sideframe 1/2 k_v
Empty Car	10,300	D	0.5	Per sideframe 1/2 k_ℓ loaded
Suspension Spring Lateral Rate [lb/in].....	2,700		0.5	Per sideframe 1/2 k_ℓ empty
Gib Stop Lateral Spring Rate at One End of Bolster		D	-	
[lb/in].....	1×10^6	D	-	Lateral bending of one sideframe (KSF_ℓ)
Bottoming Stiffness for Vertical Spring Group				
[lb/in] (solid springs).....	1.2×10^6	D	0.5	1/2 truck vertical stiffness, TVS(2)
Vertical Coulomb Friction Force Between Bolster and Side				
Frame at One End of Bolster [lb].....	4,740	D	2	Two columns per sideframe, $2\mu_v F_c$
Lateral Coulomb Friction Force Between Bolster and Side				
Frame at One End of Bolster [lb].....	3,500	D	2	Two columns per sideframe, $2\mu_\ell F_c$
Center Plate Diameter [in].....	∿14	D		approximated by bolster bowl diameter
Height of Car Body CG Above Center Plate for			-	
Loaded Car [in].....	77.4	C,D	-	XCG(loaded) - XCPH
Empty Car [in].....	56.6	C,D	-	XCG (empty) - XCPH
Height of Center Plate Above Top of the Springs [in].....	5.8	N/A	-	Estimated by XCPH-20 in
Side Bearings Spacing from Center Line [in].....	25	D	-	
Height of Side Bearing Above Top of the Springs [in].....	10.6	N/A	-	Estimated by: 5.8 + 4 13/16
Height of Top of the Springs (uncompressed)				
Above Rails [in].....	∿20	N/A	-	Estimated by XTCG + 1 in
Spring Group Spacing from Center Line [in].....	39	D	-	Approximated from $\sqrt{k_r/k_v}$
Half of the Total Gib Clearance [in] (lateral).....	0.55	D	-	
Spring Travel-From Free Height to Bottomed [in]....,.....	6.19	D	-	
Wheel Base [in]	70	D	-	
Truck Distance [ft].....	45.4	A	-	
Rail Gauge [in].....	56.5 } rail related data			
Rail Length [ft].....	39 }			

Note: Data for 4,750 ft^3, 100 ton covered hopper car with 45 ft truck center spacing.

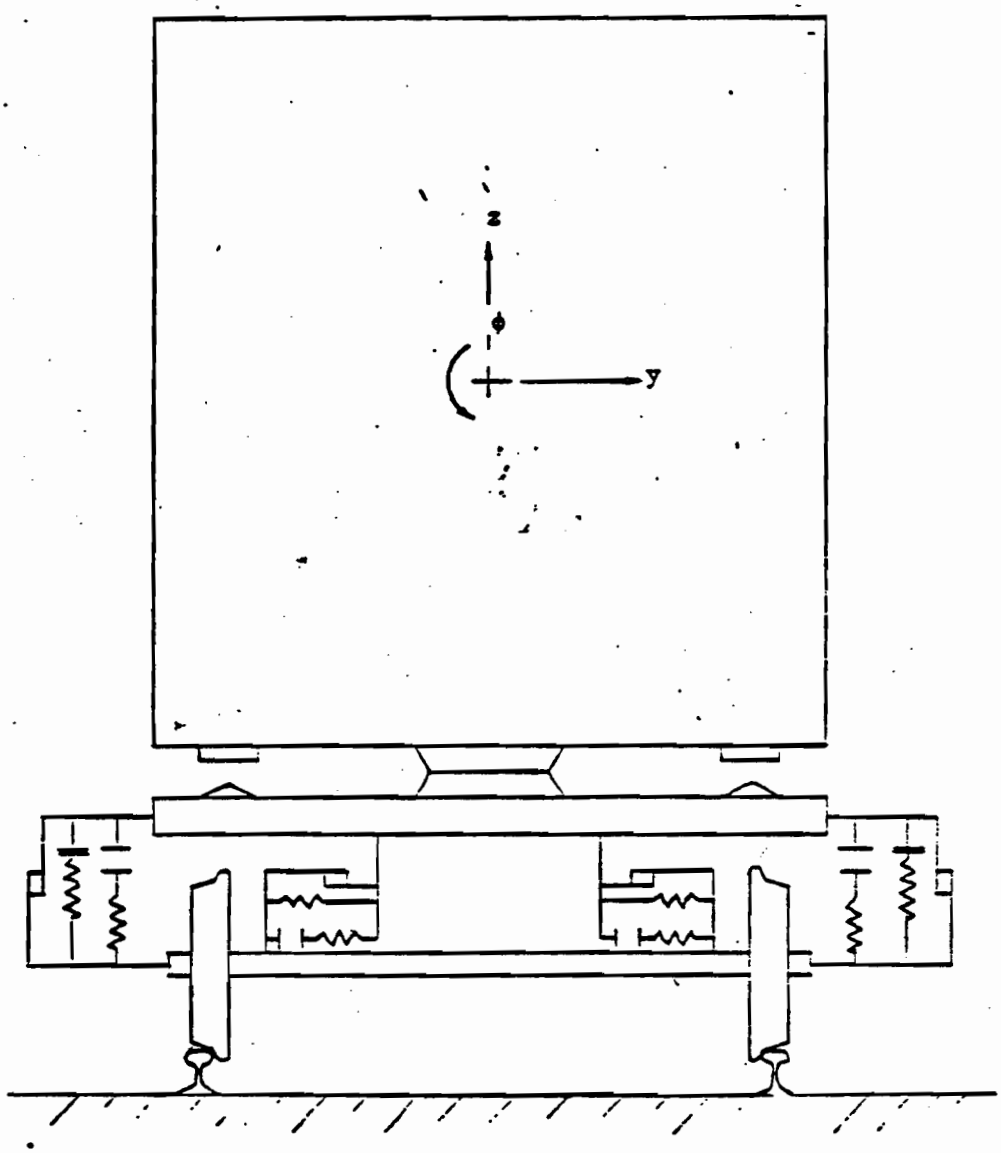

FIGURE 2-10. RAIL CAR MODEL WITH OBSERVER FACING THE DIRECTION OF FORWARD MOTION

available carbody descriptors. (Additional descriptors similar to those contained in Appendix A would be helpful in making these selections). Having made this selection, additional dimensional descriptors and population statistics are available from Appendix A. For example, the vehicle selected for analysis is representative of a design group having a population of about 56,500 vehicles or approximately 23 percent of the fleet of covered hopper cars. Essentially all of these cars are equipped with roller bearing trucks and standard draft gear.

From Appendix C, page C-15, for covered hopper car No. 11, unloaded carbody parameters are contained in the first part of the data listing together with some additional dimensional data, an estimate of the total annual mileage traveled by vehicles represented by this design group and codified data indicating truck and representative lading descriptions. Truck code 3 indicates a 100 ton truck design which is characterized in Appendix D (pages D3 and D4). The single lading code specified (i.e. No. 83) indicates this vehicle is basically a commodity dependent vehicle. Representative lading data for this "typical" load are described in Appendix B under lading code No. 83. Load dependent carbody parameters are found in the second part of Appendix C (page C-17) for covered hopper car No. 11, and lading code No. 83.

The parameter values listed in Table 2-8 have been assembled from these data elements as indicated.

2.4 Frieght Vehicle Data Comparisons

In order to provide some indication of how the freight vehicle characterization data developed by Pullman compares with individual vehicle characterization developed through independent tests and/or computations, some comparisons were made between the DVC descriptions and sets of parameters describing individual vehicles as available from the literature. Table 2-9 compares principal dimensions, capacities, lightweights, c.g. heights, and mass moments of inertia developed [3] for five freight car configurations. For each car type, a DVC was selected which most closely approximated these cars based on a comparison of car capacities and dimensional data with corresponding DVC data developed from sorting UMLER (i.e., the general design group descriptions contained in Appendix A.) Since the DVC descriptions were developed by sorting the UMLER file based on key configurational features for various car types, virtually any freight car may be associated with a particular DVC in this manner.

The data of Table 2-9 indicates that the general configurations, capacities and computed data elements usually compare quite closely. The largest differences are seen in the relative outside lengths of the cars. However, this is due to a difference in the definition of outside length as noted. The ACF lengths (over carbody end-sills) should be shorter than the DVC lengths which are over the coupler pulling faces. As expected, the difference in definitions is accentuated for the two cushioned vehicle comparisons. The DVC data shown in Table 2-9 was assembled from Appendices A and C.

TABLE 2-9. EMPTY CAR COMPARISONS

	40' 50T BOX		60' 100T BOX		HI CUBE BOX		70T FLATCAR (TOFC)		C HOPPER	
	TTD (a)	DVC 2a	TTD (b)	DVC 23b	TTD (c)	DVC 37	TTD (d)	DVC 28a	TTD (e)	DVC 9a
Truck Cap	50T	50T	100T (cushioned)	100T (cushioned)	70T (cushioned)	70T (cushioned)	70T	70	100T	100T
Outside Length*	40.8'	44.5'	60.9	68.2	86.5	93.6	89'	92.7'	50.3'	54.4
Truck Center ft	30.9'	30.9'	46.3'	46.3'	64'	64'	66'	66.5'	41.3	41
Vol. Capacity ft^3					10,000	10,400			4650	4500
Wt Capacity (kips)	110	110	184	182	100	102	149.4	143	200	198
Light Wt (kips)	50.1	52	77.1	76	113	113	70.6	68.9	61.4	62.3
Carbody Wt (kips)	40.9	38.1	62.7	57.5	97	97	47.8	50.2	42	43.3
C.G. Height (in)	68.7"	73.6"	76.6	76.1	83.6	75	35.7	34.3	78.7	79.6
I_p (lb-sec^2-in)	2.36×10^6	2.38×10^6	7.9×10^6	7.5×10^6	2×10^7	2.38×10^7	1×10^7	1.25×10^7	4.9×10^6	3.78×10^6
I_y (lb-sec^2-in)	2.24×10^6	2.3×10^6	7.6×10^6	7.39×10^6	1.94×10^7	2.34×10^7	$.99 \times 10^7$	1.26×10^7	4.79×10^6	3.86×10^6
I_{roll} (lb-sec^2 in)	3.78×10^5	3.78×10^5	6.68×10^5	6.5×10^5	1×10^6	1.18×10^6	1×10^5	1.26×10^5	3.98×10^5	4.78×10^5

* O.L. (TTD) is over end sills.
O.L. (DVC) is over pulling faces of coupler (i.e. will be somewhat longer)

*From Volume 4 of AAR/TTD Harmonic Roll Series.

3.0 SUMMARY DESCRIPTION OF LOCOMOTIVE AND PASSENGER VEHICLE CHARACTERIZATION DATA

3.1 PASSENGER VEHICLE CHARACTERIZATION

Due to the relatively small populations of locomotive and passenger vehicles, a more direct approach was possible in developing representative design groups and associated engineering parameter descriptions for these vehicles. In addition, the relative uniformity of passenger vehicle overall lengths, truck center spacings and overall design features implies that the fleet of approximately 5,200 passenger vehicles may be described by a small number of generically similar design groups. Population data and information describing overall dimensions and average weights of passenger vehicles was available from the literature. Various passenger vehicle design groups were defined and grouped into four main categories as follows:

- o Single level, light-weight cars (unpowered)
- o Single level, heavy weight cars (unpowered)
- o Single level self propelled cars
- o Bi-level cars

Engineering parameter descriptions for each of these design groups were compiled from data existing in the literature, in Pullman's engineering files, or from calculations based on structural data taken from representative design drawings.

A total of four representative passenger vehicle truck designs were identified and engineering data was assembled to characterize typical passenger vehicle suspension systems. These designs include:

- o GSI four wheel swing hanger (outside or inside swing hanger)
- o Minden Deutz-USA, 4 wheel outside swing hanger
- o Budd Pioneer III, 4 wheel, and
- o GSI-Metroliner, 4 wheel, powered

Passenger vehicle carbody and truck descriptions are contained in Appendices F and G respectively. The carbody data indicates which truck designs are associated with each carbody design group. The carbody descriptions also include mass, inertia, c.g. height, length, average weight, and populations. Estimates of

carbody lateral and torsional stiffnesses and fundamental mode frequencies in bending and torsion are also provided. Figure 3-1 summarizes passenger vehicle characterization data.

Truck descriptions include: principal masses, c.g. heights and moments of inertia; vertical and lateral, primary and secondary stiffnesses; some basic data describing damping in primary and secondary suspensions; centerplate yaw stiffness or friction (breakway torque); and, basic truck geometry data. Schematic drawings illustrating basic truck configuration, principal masses and interconnecting stiffness and/or damping elements are contained in Figure 3-1 through 3-4 of Volume II for the four principal truck design groups. The descriptions provided are probably most useful for analysis of carbody and/or truck vertical pitch/bounce response to vertical excitations. These analyses include: assessment of vertical ride-quality characteristics, vertical forces developed at the wheel/rail interface; and assessment of sprung-mass accelerations and/or relative displacements. Table 3-1 contains typical passenger truck data for the GSI four-wheel serving hanger and Minden Deutz trucks. The GSI swing hanger truck has some small variations in the swing link-spring plank arrangement. These differences are noted in Table 3-1 by designation of subgroups 1a (inside swing-hanger arrangement) and 1b (outside swing-hanger).

For lateral analyses, the truck characterizations may require supplemental information such as load/deflection/velocity characteristics of lateral suspension elements which are generally non-linear. Some additional descriptive data for the Minden Deutz and Budd Pioneer III trucks can be found in [5] while [4] provides additional information describing the GSI Metroliner truck.

MC = Carbody mass
IP_y = Mass moment of inertia in yaw
IP_p = Mass moment of inertia in pitch
IP_r = Mass moment of inertia in roll

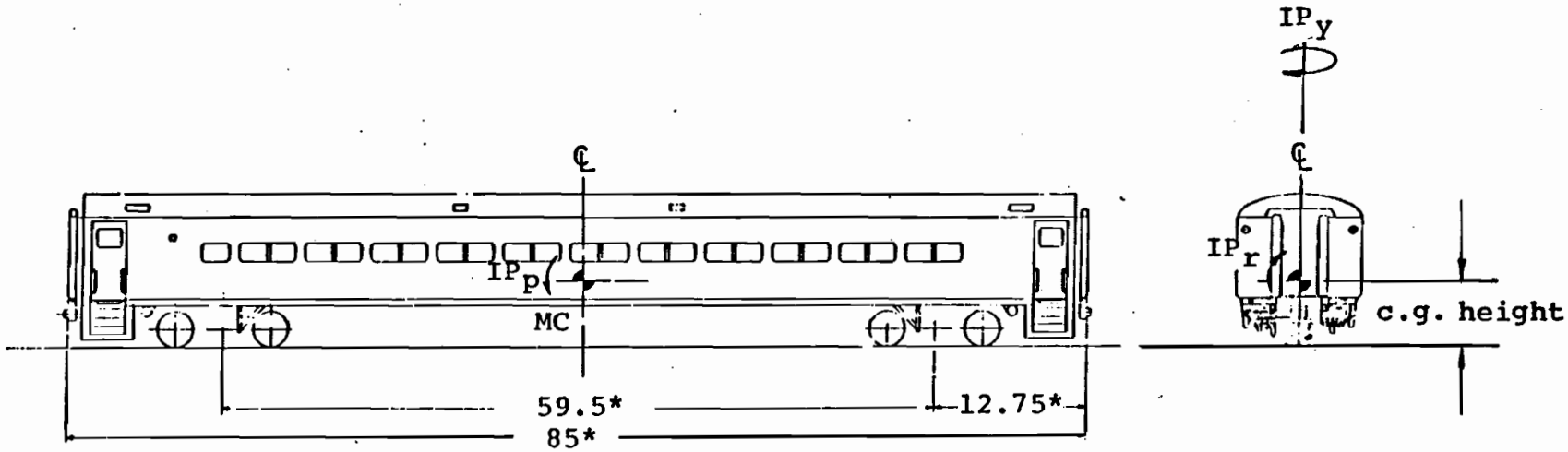

* indicates dimension is common to all carbody design groups

Other carbody parameters:
- Carbody Vertical Bending Stiffness
- Carbody Lateral Bending Stiffness
- Carbody Torsional Stiffness
- Carbody Fundamental Vertical Bending Mode Frequency
- Carbody Fundamental Lateral Bending Mode Frequency
- Carbody Fundamental Frequency in Torsion

Other carbody data:
- Population (each design group)
- Truck codes

FIGURE 3-1. TYPICAL PASSENGER VEHICLE CHARACTERIZATION DATA

TABLE 3-1. PASSENGER CAR TRUCK PARAMETERS

I. GENERAL FAMILY DESCRIPTORS AND COMPOSITION

FAMILY NO.	1	2
DESCRIPTION (Characterized by)	Single Level Coach & Combination Coach	All Bi-Levels
Overall length (ft.)	85	85
Truck center spacing (ft.)	59.5	59.5
Weight (ex. trucks) (lbs.)	89,220	98,920
Population	2625	792
Truck Code (%)	1a(19), 1b(23), 1c(23), 3(19)	1a(52), 2(36)

II. ENGINEERING PARAMETER DESCRIPTION OF FAMILIES

Parameter	Value	Value
Mass (lb-sec^2/in)	230.9	256.0
Center of mass (in.)	72.0	77.5
Yaw moment of inertia (in-lb-sec^2)	2.05×10^7	2.86×10^7
Pitch moment of inertia (in-lb-sec^2)	2.05×10^7	2.86×10^7
Roll moment of inertia (in-lb-sec^2)	4.67×10^5	8.37×10^5
Vertical stiffness (lb/in)	607,100	936,400
Lateral stiffness (lb/in)	382,600	228,000
Torsional stiffness (in-lb/rad)	43.2×10^7	79.9×10^7
Vertical frequency (Hz)	6.5	8.5
Lateral frequency (Hz)	6.2	5.6
Torsional frequency (Hz)	15.2	15.5

Note: From Appendix G, Vol. II

3.2 LOCOMOTIVE FLEET CHARACTERIZATION

The approach to developing fleet characterization data for locomotives and the resulting data is similar to that described for passenger vehicles. A total of fourteen locomotive design groups, generically similar in terms of gross weight, overall length, truck center spacing and (truck) axle arrangement, were defined to characterize the fleet of approximately 27,000 locomotives. Since 90% of the locomotive field could be accounted for by just five design groups these design groups were taken as representative of the fleet and a typical design was selected from each group as being representative of the entire group. Engineering data was then assembled to describe this representative locomotive. The following locomotives were selected as representative.

Model(s)	Manufacturer*	Description
F7, F9	EMD	Light, Short, 2 Axle Road Locomotive
GP7, GP9	EMD	Medium Size, 2 Axle Road Locomotive
GP38, GP40	EMD	Heavy, Long 2 Axle Road Locomotive
SD7, SD9	EMD	Medium Size, 3 Axle Road Locomotive
SD40, SD45	EMD	Heavy, Long 3 Axle Road Locomotive

*EMD locomotives were selected because (a) EMD is the major producer of locomotives accounting for approximately 82% of fleet and (b) differences in overall design configurations with locomotives produced by other manufacturers are generally small.

Figure 3-2 indicates locomotive characterization data assembled in Appendix I of Volume II for each of the five locomotive design groups. Since data on locomotive weights, length over end plates and length between coupler pins was generally available for all locomotives within each design group a typical value, a mean value and the standard deviation have been computed for these parameters to indicate typical variations in these parameters. The center of gravity location can be assumed to be equidistant between the truck centers along the car length, and at the axle centerline across the car width.

A total of five widely produced locomotive truck designs were identified as follows.

4 wheel EMD "Blomberg" Design (Reference Figure 4-2 Volume II)

6 wheel EMD "Flexi-Coil" Design (Reference Figure 4-3 Volume II)

4 wheel GE "Floating Bolster" Design (Reference Figure 4-4 Volume II)

6 wheel GE "Floating Bolster" Design (Reference Figure 4-3 Volume II)

6 wheel EMD HTC (HiTraction) Design (Reference Figure 4-3 Volume II)

Each truck design group has been associated with principal locomotive design group as indicated by the truck identification code included with the locomotive carbody data of Appendix I in Volume II. Locomotive truck data is contained in Appendix J of Volume II. Truck descriptions include: principal component masses, c.g. heights, moments of inertia, vertical and lateral primary and secondary suspension data, center-plate friction coefficients, and basic truck geometry data. Table 3-2 indicates typical locomotive truck data for the EMD four-wheel "Blomberg" Design and six-wheel "Flexi Coil" designs. Schematic drawings illustrating basic truck configuration, component masses and interconnecting stiffnesses are contained in Figures 4-2, 4-3, and 4-4 of Volume II. It should be noted that lateral stiffness elements and vertical and lateral damping elements, although not indicated in these schematics also exist at the locations shown for the vertical stiffness elements. The truck data contained in Appendix J is most suitable for vertical pitch/bounce analyses of locomotives. For analysis of locomotive lateral dynamics, supplemental suspension data may be required to characterize lateral suspension load/deflection/velocity relationships which are generally non-linear.

ML = Locomotive mass (excluding trucks)
IL_y = Mass moment of inertia in yaw
IL_p = " " " " " pitch
IL_r = " " " " " roll

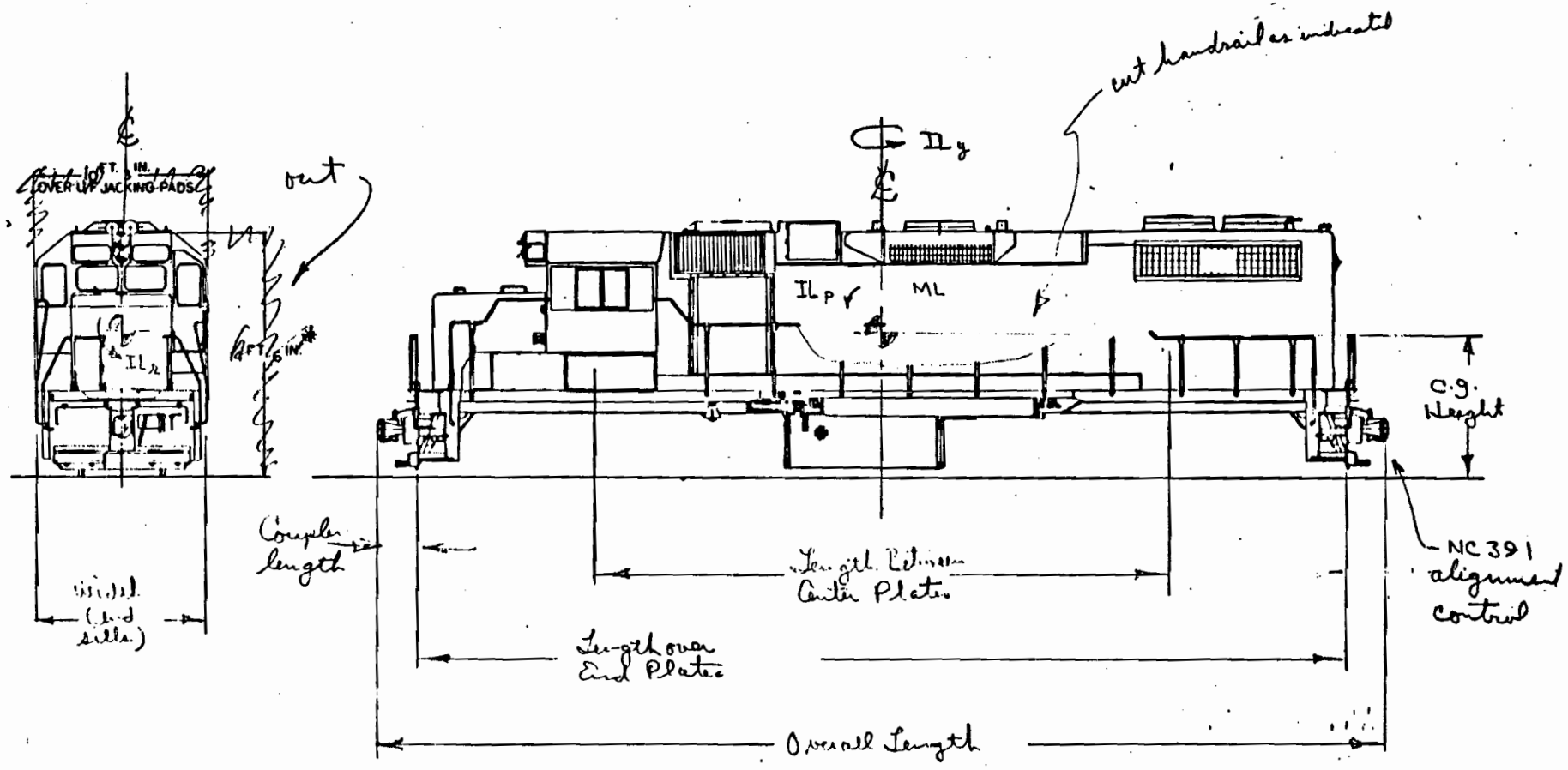

Other carbody data: Population (each design group)
Truck Codes

FIGURE 3-2. TYPICAL LOCOMOTIVE (CARBODY) CHARACTERIZATION DATA

TABLE 3-2. LOCOMOTIVE TRUCK PARAMETERS

I. GENERAL FAMILY DESCRIPTORS AND COMPOSITION

FAMILY NO.	1	2
DESCRIPTION (Characterized by)	Light, Short, 2-Axle Road Locomotives (EMD F 7/9)	Medium, 2-Axle Road Locomotives (EMD GP 7/9)
Overall length	50'-8"	56'-2"
D.V.C. No.	1	2
Width over side sills	118"	120"
Weight (ex. trucks)	159,800	181,300
Population	797	8,830
Truck Code (%)	1(87), 3(13)	1(92)

II. ENGINEERING PARAMETER DESCRIPTION OF FAMILIES

Parameter	Value			Value		
Mass	Typ. 413.6	Mean (417.7)	Std. Dev. (10.73)	Typ. 469.2	Mean (471.0)	Std. Dev. (4.31)
Center of mass	83.0			80.0		
Yaw moment of inertia	8.03×10^6			10.55×10^6		
Pitch moment of inertia	8.03×10^6			10.55×10^6		
Roll moment of inertia	1.43×10^6			1.43×10^6		
Length over end plates	Typ. 581	Mean 584.3	Std. Dev. 8.41	Typ. 624	Mean 620.6	Std. Dev. 2.33
Length over center plates	Typ. 360	Mean 361.1	Std. Dev. 2.69	Typ. 378	Mean 375	Std. Dev. 5.66
Length over coupler pins	538.0			617.0		
Length of couplers	35.0			28.5		
Draft gear description	NC 391 (alignment control)			NC 391 (alignment control)		

Notes: 1) Locomotives in this tabulation are dimensionally symmetric, therefore the overhang dimension has been omitted.
2) Typical value was used in parameter computation. The mean and standard deviation are based on the majority of locomotives in the family.

Note: From Appendix I, Vol. II

4.0 SUPPLEMENTAL DISCUSSIONS

The following supplemental discussions are included to provide additional information on selected elements of the freight vehicle characterization methodology to more fully define the procedures and assumptions used in computing carbody parameters and in developing generically similar freight vehicle families. Some additional data is also included to indicate the non-linear nature of freight vehicle truck suspension elements and possible variations in nominal vertical spring rates associated with different spring group arrangements.

4.1 COMPUTED CARBODY PARAMETERS

After selection of a vehicle representative of each DVC, (refer to Figure 1-1 and the discussion of Section 2.1), dimensional and structural data, such as that shown in Table 4-1 for boxcars, was assembled from design drawings taken from Pullman's engineering files for use in developing more detailed carbody descriptions. This data was used in computing car body mass moments of inertia, carbody static bending stifnesses and estimates of vertical and lateral fundamental mode frequencies. Estimates of carbody stiffness and fundamental torsional frequency were also made based on extrapolations of available test data. This data has been generated for all of the 198 DVCs characterizing the nine mechanical car types.

Carbody weight was determined for each DVC by taking the mean value of vehicle lightweight as determined from UMLER sorting and analysis, and subtracting the weight of a carset of trucks. Carbody c.g. height was established from engineering reports for similar or identical vehicle designs. The following discussion describes the general nature of the assumptions and computational methods used to compute moments of inertias, stiffnesses and bending and torsional frequencies for the various car types, using the boxcar shown in Figure 4-1 as an example.

Carbody Mass Momennts of Inertia

The carbody weight (WC) and c.g. height (YC) were used to determine mass distributions among sides, ends, and roof (assuming mass distributions proportional to these surface areas and uniform density) and the heavier carbody floor, as follows:

From a moment balance

$$WC(YC) = XH(WE + WR + WS)$$

From a force balance

$$WC = 2WE + 2WS + WR + WF$$

TABLE 4-1. TYPICAL INPUT DATA FOR PARAMETER COMPUTATION PROGRAM (PARMS)

EXAMPLE - BOX CAR 24a

		Source
WC - Carbody Weight	--68,500 lbs.	1
XL - Carbody Length (inside)	--729 in.	1
XT - Length between Truck Centers	--555 in.	1
XP - Length between Coupler Pins	--760 in.	1,2
XC - Coupler Length	--29.3 in.	1,2
TS - Torsional Static Stiffness	--21.0×10^7 in-lb/rad.	3
CG - Center of Gravity Height above Rail	--72.9 in.	4
XB - Height from Rail to Bottom of Carbody	--42.0 in.	2,4
XW - Carbody Width	--122.0 in.	4
AP - Side Plate Area	--3.8 $in.^2$	4
AS - Side Sill Area	--8.7 $in.^2$	4
XH - Carbody Height	--137.0 in.	4
PM - Moment of Inertia--Side Plate in Doorway	--39.2 $in.^4$	4
SM - Moment of Inertia--Side Sill in Doorway	--387.3 $in.^4$	4
XD - Door Width	--120.0 in.	1
AT - Side Plate Area in Doorway	--6.8 $in.^2$	4
AB - Side Still Area in Doorway	--11.4 $in.^2$	4
BX - Distance from Truck Center to Edge of Door	--217.5 in.	4

Sources:

1 = DVC data from UMLER
2 = AAR Design and Construction Specifications
3 = Estimate based on available test data
4 = Engineering drawings or reports
5 = Computed from its above data elements

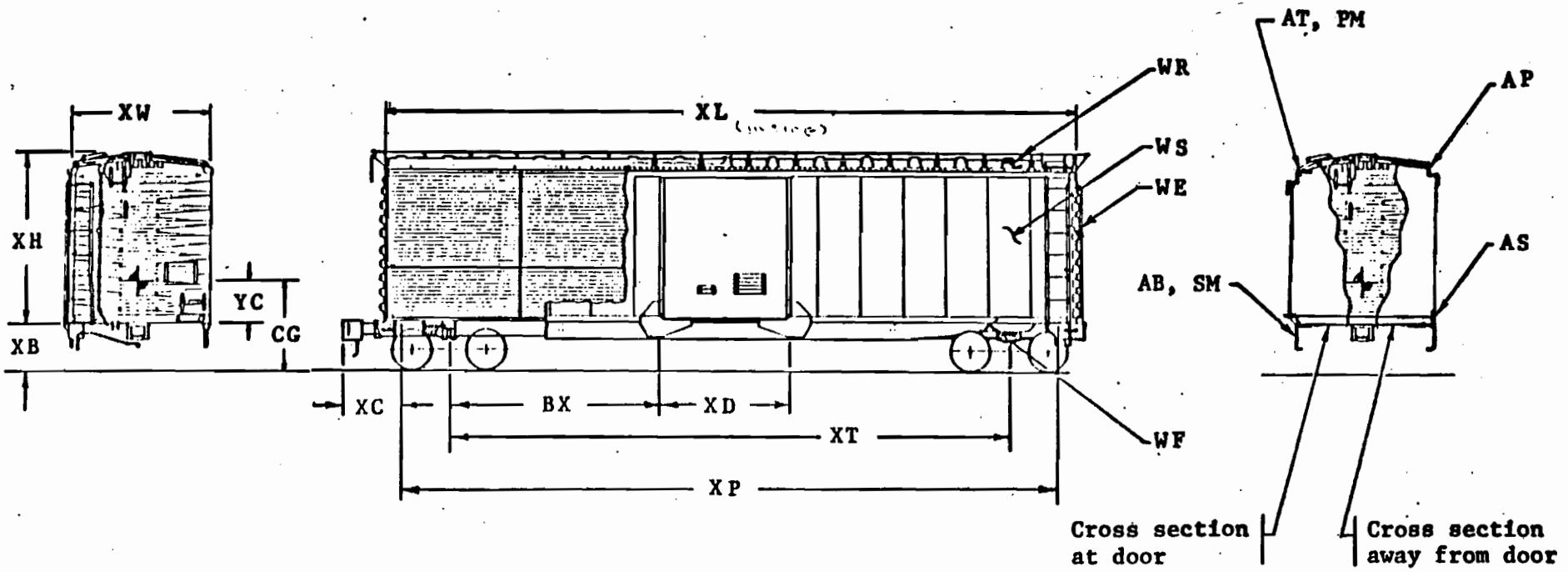

WR - Weight of Carbody Roof
WS - Weight of Carbody Side
WE - Weight of Carbody End
WF - Weight of Carbody Floor

FIGURE 4-1

Considering weight distributions of sides, ends, and roof in proportion to surface area, results in

$$WS = \frac{XH}{XW} WR, \quad WE = \frac{XH}{XL} WR \text{ etc.}$$

These equations can be used to determine weights of sides, ends and roof as a function of carbody weight, c.g., height and vehicle dimensions and surface areas, viz,

$$WS = (WC)(YC)(XL)/SD$$

$$WE = (WC)(YC)(XW)/SD$$

$$WR = (WC)(YC)(XL)(XW)/(XH)(SD)$$

$$WF = (WC)\left[1 - \frac{YC(2(SD) - (XW)(XL)}{(XH)(SD)}\right] = WC - (2WE + WS) - WR$$

where $SD = (XL)(XH) + (XH)(XW) + (XL)(XW) = 1/2$ vehicle surface area.

Having apportioned carbody weight in this fashion, the mass moments of inertia were computed from the following expressions

$$I_{ROLL} = \frac{WS}{G}\left[\frac{XH^2}{6} + \frac{XW^2}{2}\right] + \frac{WE}{G}\left[\frac{XH^2 + XW^2}{6}\right] + \frac{WR}{G}\left[\frac{XW^2}{12} + (XH - YC)^2\right]$$

$$+ \frac{WF}{G}\left[\frac{XW^2}{12} + YC^2\right] + \frac{2(WS + WE)}{G}\left[\frac{XH}{2} - YC^2\right]$$

$$I_{YAW} = \frac{WS}{G}\left[\frac{XL^2 + XH^2}{6}\right] + \frac{WE}{G}\left[\frac{XW^2}{6} + \frac{XL^2}{2}\right] + \frac{(WR + WF)(XL^2 + XW^2)}{(12)(G)}$$

$$I_{PITCH} = \frac{WS}{G}\left[\frac{XL^2 + XH^2}{6}\right] + \frac{WE}{G}\left[\frac{XH^2}{6} + \frac{XL^2}{2}\right] + \frac{WR}{G}\left[\frac{XL^2}{12} + (XH - YC)^2\right]$$

$$+ \frac{WF}{G}\left[\frac{XL^2}{12} + YC^2\right] + \frac{2(WS + WE)}{G}\left[\frac{XH}{2} - YC\right]^2$$

Carbody Static Stiffness

Carbody bending stiffnesses were computed by treating the carbody as a simply supported beam of length XL supported at the bolsters. For box, stock and refrigerator cars this was done by finite element modeling of the carbody structure to develop a vertical bending stiffness distribution along the length of the car using appropriate structural data for each car type (i.e. AP, AS, AT, AB, PM and SM as shown in Table 4-1 for boxcars). The deflection at the center of the carbody was computed assuming a uniform distribution of carbody weight over its length. Carbody stiffness has been defined as the entire car weight divided by the deflection at the carbody center.

In computing variations in carbody vertical bending stiffness for boxcars, all of the flexural rigidity is assumed to be supplied by the car sides except at the door opening locations where the flexural rigidity is provided by the main structural beams in this area. The side structure is represented by side plate and side sill members connected through side girders. For the lateral stiffness distribution, the floor structure represented by side sill members connected through lateral crossties is considered to provide all of the lateral flexural rigidity. Torsional stiffnesses were estimated by interpolating or extrapolating torsional stiffness data taken from tests on similar vehicle configurations, in accordance with car length. Torsional stiffness is defined as the torque required to produce a relative angular displacement or twisting of the carbody as measured at the truck centers.

Carbody Bending Frequencies

Fundamental mode frequenices have been computed for carbody vertical and lateral bending modes of vibraiton. Except for box, stock, and refrigerator cars which have obvious structural discontinuities around the door area, the carbody is considered to be a uniform free beam having uniform stiffness and mass distributions along the length of the car. For the fundamental mode, the vertical bending frequency is given by

$$f_v = \frac{11.2}{\pi} \sqrt{\frac{EI_s}{mL^4}} \quad (H_z)$$

where E = Modulus of elasticity for steel

I_s = Area moment of inertia of side structure

m = Carbody mass per unit length

L = Carbody length

The lateral bending frequency is computed in a similar manner except that the area moment of inertia is based on the main structural elements contributing to lateral flexural rigidity (such as the floor structure for box cars).

An estimate of the carbody natural frequency in torsion is provided by assuming the carbody to be represented by a single degree of freedom torsional system with massless spring and concentrated mass, viz

$$f_t = \frac{1}{2}\sqrt{\frac{K_t}{I_R}}$$

where K_t = Carbody torsional stiffness

I_R = Carbody mass moment of inertia in roll

For box, stock and refrigerator cars, a finite element model of the carbody structure, including doorway, was used to compute vertical bending mode frequencies for these cars.

Computed values of carbody fundamental bending mode frequencies have been compared with a limited amount of available test data for similar car types. These comparisons indicated relatively good agreement for the vertical bending mode (i.e., in the order of 5 to 30%), fair agreement on lateral bending frequencies and gross differences in the torsional mode. The carbody modal frequency data is not intended to provide detailed structural response data on specific car designs, but rather is intended to indicate which vehicle designs are likely to have modal response characteristics in the frequency range typically associated with vehicle/track dynamic interation and to identify rigid vs. flexible carbody designs. Although they are only estimates, the vertical and lateral bending mode frequencies are useful for this purpose. The torsional mode data is based on gross assumptions and should be used with care.

Load Dependent Carbody Parameters

Since carbody mass, center of gravity height, moments of inertia and modal response frequencies are all influenced by load characteristics, these parameters have been recomputed for each distinctive vehicle design (i.e., each DVC) and for each representative load identified with each vehicle. Loads are generally assumed to be uniformly distributed over the carbody floor. Commodity dependent cars such as open and covered hopper cars, and tank cars, are assumed loaded to full volumetric capacity. Average load and density data, similar to that shown in Table 4-1 are used to establish a composite vehicle/load center of gravity height and mass. Inertias and modal frequencies are re-computed for each vehicle/load combination, using the formulations described above. The lading is assumed to have negligible effect on structural stiffnesses.

4.2 VARIATIONS IN FREIGHT VEHICLE TRUCK SUSPENSION

Engineering data describing freight vehicle truck masses, inertias, dimensions and suspension data is organized in Appendix D of Volume II and typical truck data is shown in Table 2-6 of Section 2. It should be noted that certain of the suspension stifnesses vary non-linearly with the working height of the spring group. Although a complete description of non-linearities is not included here stiffnesses corresponding to empty and fully loaded conditions are included to provide some indication of lateral and yaw stiffness variations under load. The non-linear behavior is probably associated with changes in the mechanics of lateral spring loading as the spring working height is changed. In the lightly loaded condition each coil of the spring has a substantial pitch* and lateral spring compliance arises from combined torsion and bending of each coil. As the load is increased and the spring height approaches the solid height, spring loading in torsion is relatively small and the lateral load is resisted primarily by bending of the coils which produces a net stiffening effect.

Truck yaw stiffnesses contained in Appendix D and shown in Figure 2-5 are defined as the torque required to produce bolster yaw motion with respect to constrained side frames. In this mode the spring groups are actually loaded

*Pitch is usually taken as the free height divided by the number of coils for a compression spring.

in combined shear and torison although torsional spring motions should be relatively small due to constraints in bolster to sideframe relative to motions. Accordingly truck yaw stiffness is based on a longitudinal spring rate assumed equal to the lateral spring rate,* and is also non-linear with vertical spring travel.

From tests conducted on a 70 ton ASF Ride Control Truck [2] changes in vertical and lateral spring stiffness with vertical spring deflection were approximated as shown below. (Refer to Figure 2-5.)

Loading	Symbol	Rate of Change	Application Spring Height Range (in.)
Vertical	k_v	None	7 - 9-3/4
Lateral	k_ℓ	+3,260 lb/in/in.vert. deflection	7 - 9-1/2

The vertical spring deflection is seen to be linear over the full application spring height range (approximate spring heights corresponding to empty and fully loaded conditions), while the lateral spring rate is quite sensitive to vertical spring deflections.

Other non-linear truck suspension characteristics may result from friction damping, slop (i.e. clearance between truck components), and stiffnesses arising from hitting hard stops.

In addition, each major truck design (i.e. 50, 70 and 100 ton trucks) may be equipped with a number of spring groups arrangements having different free height, spring travel, and vertical stiffness characteristics as indicated in Table 4-2. [1,6] Each group is composed of a specific arrangement of inner and outer compression springs (designated as D3, D4, D5, D6 and D7 spring designs). The most common spring group for each major truck capacity group is indicated and the truck characterization data of Appendix D is based on these most-common groups. (Small differences in vertical stiffness data may be observed in comparing this data with Appendix D. This is due to some minor differences in test data [2] and nominal values contained in the AAR Manual of Standards and Recommended Practices).

*Yaw stiffness is computed from $K_\gamma = \frac{1}{4} K_\ell L^2$ where L is the lateral spacing between spring group centerlines (usually about 78").

TABLE 4-2. RANGE IN VERTICAL STIFFNESS CHARACTERISTICS FOR VARIOUS SPRING GROUP ARRANGEMENTS BY JOURNAL BEARING SIZE

	SPRING TRAVEL (in)	2 1/2	3 1/16	3 11/16	4 1/4	RANGE IN VERTICAL STIFFNESS (LB/IN)
	FREE HEIGHT (in)	9 1/16	9 5/8 *	10 1/4 *	10 13/16 *	
	SOLID HEIGHT (in)	6 9/16	6 9/16	6 9/16	6 9/16	
50 TONS	5 1/2" x 10" JOURNALS	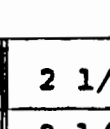	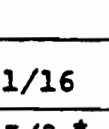 **	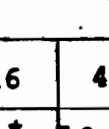		17,600 TO 26,600
	SOLID CAPACITY	66,502	67,135	64,865		
	VERTICAL STIFFNESS	26,600	21,900	17,600		
70 TONS	6" x 11" JOURNALS	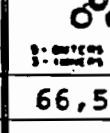	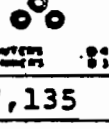	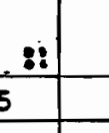 **	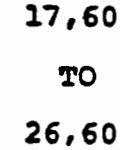	20,000 TO 33,500
	SOLID CAPACITY	83,645	81,061	83,086	85,142	
	VERTICAL STIFFNESS	33,500	26,500	22,500	20,000	
100 TONS	6 1/2" x 12" JOURNALS	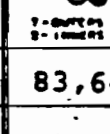	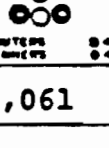	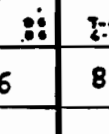 **	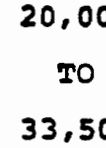	23,100 TO 41,200
	SOLID CAPACITY	102,964	100,488	99,760	98,318	
	VERTICAL STIFFNESS	41,200	32,800	27,100	23,100	
	6 1/2" x 12" JOURNALS	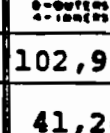	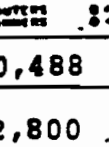	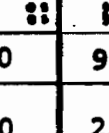		
	SOLID CAPACITY	96,522	94,793	95,698		
	VERTICAL STIFFNESS	38,600	31,000	26,000		

* OUTER COIL

** MOST COMMON SPRING GROUPS

Reference: AAR Manual of Standards and Recommended Practices

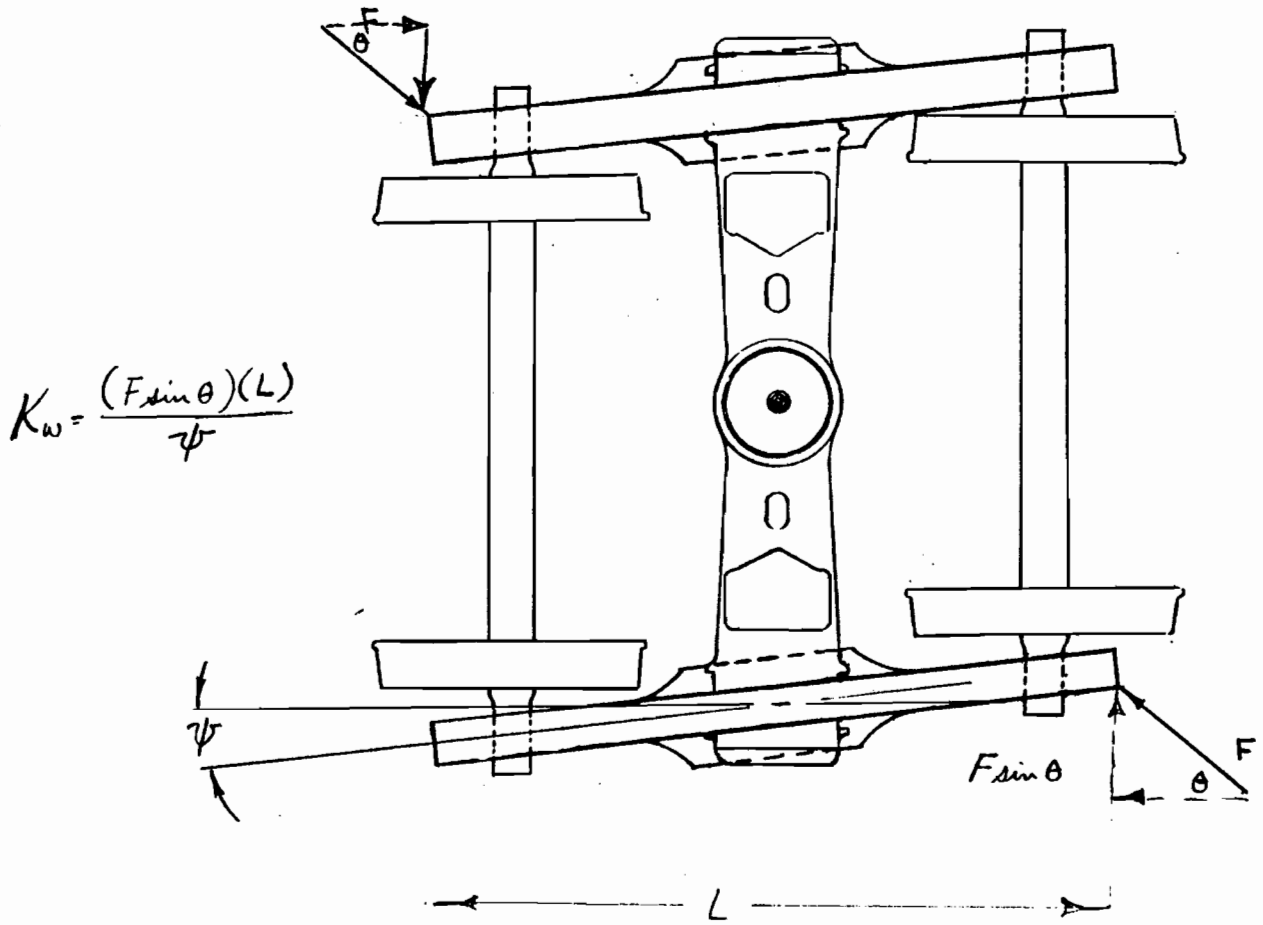

Figure 4-2. Freight Truck "Warp" Degree of Freedom

It should be noted that the yaw stiffness data contained in Appendix D and discussed above is not a total truck warp, (also referred to as tramming or lozenging) stiffness. Figure 4-2 illustrates the "warp" degree of freedom which results in equal axle and bolster angular displacements relative to the truck side frames due to an applied load as shown. The truck warp stiffness may also be dependent on vertical spring displacements (i.e. preload). Although only limited test data on truck warp stiffness is available, the following table indicates typical values based on tests of 70 ton Barber and ASF Ride Control Trucks equipped with roller bearings.

In these tests the ASF truck was relatively insensitive to preload as shown below.

Preload	Truck Warp Stiffness (in-lb/rad) ASF	Barber
20,000 lbs	4.4×10^7	1.9×10^7
100,000 lbs	3.4×10^7	7.0×10^7

4.3 DEVELOPMENT OF GENERICALLY SIMILAR FREIGHT VEHICLE FAMILIES

An overview of the freight vehicle characterization data developed under this effort was presented in Section 2.0 with a relatively brief discussion on the development of generically similar freight vehicle families. The following paragraphs describe the mechanics of developing these families in more detail using the 198 unloaded and 434 loaded vehicle characterizations with associated populations and total annual mileage estimates as described in Section 2.0 as the basic freight vehicle fleet description.

In order to develop improved performanced-based safety standards for track which limit vehicle/track dynamic interaction to safe and tolerable levels, detailed analytical studies are necessary to quantify inter-relationships between railcar safety, operational speeds and track geometry variations. This requires consideration of a wide range of track conditions, rolling stock and operational speeds associated with railway operations. In order to cope with the vast number of individual vehicles in the fleet, the range of track characteristics and operational conditions possible, probabilistic studies of vehicle/track dynamics which will consider a matrix of statistically described track conditions and generic vehicle families are planned. These studies will result in a set of derailment probabilities for various classes of vehicles operating over various classes of track.

In such an analysis, it would be impractical to consider separately each of the 632 unloaded and loaded vehicle characterizations previously described, although analysis of individual vehicle designs in specific derailment scenarios are, and will continue to be necessary. More global analyses will require a smaller number of vehicle characterizations describing the full range of rolling stock configurations. Since the reduced number of vehicle groups necessarily involves some variation within each group, it is natural that the group descriptions are statistical in nature.

This leads to the concept of further grouping of railcars based on important configurational features which are known to influence a railcar's dynamic performance. Characterizing the freight vehicle fleet by a reduced number of generically similar freight vehicle families is expected to be a practical and cost-effective approach in conducting studies in rail systems dynamics toward meeting the above objectives. Based on recent analyses the most important,germane configurational features of railcars include: truck suspension characteristics (as defined by truck capacity); truck center spacing; vehicle gross weight; carbody center of gravity height, and carbody vertical flexibility characteristics. Further grouping of the DVCs in this manner will result in a smaller number of generically similar families which are expected to exhibit similar dynamic response characteristics. Cars of different function and/or mechanical design will routinely be grouped together provided they have similar design configurations as defined above.

The number of railcar families which would result from such a grouping is approximated by the following (preliminary grouping algorithm);

A. Number of major and distinctive suspension designs = 3

   These are 50, 70 and 100 ton truck designs. Grouping railcars having different truck design (e.g., a group containing both 50 and 70 ton cars) would present an obvious problem in suspension characterization. The relatively small number of vehicles associated with 125 ton and low-level truck designs would be handled as special cases.

B. Number of truck center spacing groups = 3

   These groups would approximate short, medium and long vehicle groups.

C. Number of carbody weight ranges = 4

   These ranges would correspond to empty car and to light, moderate, and heavy load ranges.

D. Number of center of gravity height ranges = 3

These ranges would approximate low, medium and high center of gravity vehicle configurations.

E. Number of carbody flexibility groups = 2

These would be flexible and relatively rigid carbodies as determined by vertical bending frequency.

The number of generically similar railcars which could result from the above grouping algorithm is 216, which is not a radical reduction of the 632 individual vehicle and vehicle/lading characterizations. However, many of the sets represent null or very small population groups which could be lumped with similar groups (by small changes to the grouping algorithm) to reduce the total number of railcar configurations to approximately 50 to 70 generically similar groups. Pullman has completed an initial definition of generically similar freight vehicles resulting in a total of 66 famlies as described in Volume II of this report (Appendix E), including 125 ton, low level truck capacities; LPG and chlorine tank cars; and TOFC.

Since, in general many vehicles are included in each family, engineering parameters describing these families must be expressed in terms of their mean values and associated statistics of variation for each generic family. Since only vehicles of similar truck design are grouped together, the truck descriptions (as defined in Appendix D of Volume 2) are also valid for the generic freight vehicle family descriptions. Also, since each vehicle or vehicle/lading combination contained within a particular generic family have more or less usage than others (as indicated by the mileage estimates corresponding to each vehicle or vehicle/lading combination), the computation of statistical descriptions of carbody parameters takes this "usage" factor into account. Mileage-weighted statistical descriptions were thus computed as described in the following example.

Consider the computation of the mean roll inertia for the vehicles which constitute the freight vehicle generic family defined by the following:

- o Truck Capacity: 50 tons
- o Truck Center Spacing: 31 to 37 ft (med. short)
- o Vehicle Gross Weight: 46,000 to 65,000 lbs (empty of very lightly loaded)

- o Center of Gravity Height:* 24 to 44 inches (low center of gravity height)
- o Vertical Bending Frequency: above 20 Hz (relatively stiff carbody)

The major vehicle configurations (i.e., DVCs) which would fall into this group primarily include empty or lightly loaded gondolas or flatcars. If there are n DVCs which comprise this family, each having a mileage factor denoted by M_i and individual roll inertia denoted by $(I_r)_i$ a mileage weighted mean value of roll inertia $(\bar{I}_r)$ is computed from:

$$\bar{I}_r = \frac{1}{\sum_{i=1}^{n} M_i} \cdot \sum_{i=1}^{n} (I_r)_i M_i$$

Having defined $\bar{I}_r$, the standard deviation from the mean is computed according to

$$S(I_r) = \sqrt{\frac{\sum_{i=1}^{n} ((I_r)_i - \bar{I}_r^2 M_i}{\sum_{i=1}^{n} M_i}}$$

Similar computations are made to complete the (statistical) description of generically similar freight vehicle configurations, resulting in family descriptions of the form shown in Table 2-7 of Section 2.2. Part A of Table 2-7 indicates general family descriptors, typical freight cars included in the family and relative family size. Part B indicates engineering parameter descriptions of generically similar carbody configurations in statistical form. The initial generic family descriptions described in Appendix E of Volume II were developed based on an initial sorting algorithm intended to:

(a) Define natural families of generically similar freight vehicle configurations

*Above top of rails; excludes truck weight.

(b) Balance family sizes (in terms of total aggregate mileage traveled by constituent members) such that each family has a responsible "size"

(c) Group vehicles, to the extent possible, in a manner such that the statistical distributions of the sorted paramaters are normal.

In summary the preceeding discussion of generic vehicle family development is intended to emphaize the following:

(a) The 632 vehicle and vehicle/lading description characterizing the fleet of 1.7 million U.S. freight vehicles may be further grouped on the basis of key configurational features, into a smaller number of generically similar railcar families. (If necessary, modifications to the initial generic family definitions contained in Volume II, may be easily and rapidly made using existing computer sorting codes.)

(b) The generic vehicle families will permit a cost-effective approach to more global analysis of rail systems dynamics.

References and List of Recommended Data Sources

1. Car and Locomotive Cyclopedia (of American Practices), 1974 Centennial Edition, Simmons Boardman Publishing Corporation, 350 Broadway, New York, N.Y. 10013

2. Association of American Railroads, TTD/Harmonic Roll Series, Volume 2," 70 Ton Truck Component Data, Physical Restraints Mechanical Properties, Damping Characteristics." 1974.

3. "Comparison of the Nonlinear Dynamic Characteristics of the Barber S-2 and ASF Ride Control Freight Trucks," P. Abbott, Martin Marietta Corp, Working Paper, Contract No. NAS8-29882, Sept. 1976.

4. Association of American Railroads: Manual of Standards and Recommended Practices.

5. Association of American Railroads, TTD/Harmonic Roll Series, Volume 4, "Torsional and Flexural Car Stiffness Characteristics."

6. Herring, J.M. "Metroliner Ride Improvement Program" Final Report No. FRA-RT-73-30, February 1973.

7. Shapiro, S.M. "Engineering Data on Selected High Speed Passenger Trucks, Final Report No. FRA-ORD-78-29, July 1978.

8. Association of American Railroads, "Yearbook of Railroad Facts, 1979 Edition," Economics and Finance Department, American Railroads Building, 1920 L Street NW, Washington, D.C.

9. Pinkepank, J.A., "The Second Diesel Spotter's Guide", Kalmbach Books, 1973

10. Abbott, P. "Comparison of the Non-Linear Dynamic Characteristics of Barber S-2 and ASF Ride Control Freight Trucks." Technical Report NO. MCR-76-475, Main Maretta, Contract No. NHS 8-29822, Sept. 1976.

11. Platin, B. et al., "Computations Network to Predict Railcar Response to Track Cross-Level Variations," Final Report No. FRA-OR&D 76-293, September 1976.

12. "ORER" Official Railroad Equipment Register.

13. UMLER - American Association of Railroads' Universal Machine Language Equipment Register.