TTI: 0-7086

MASH TEST 3-11 ON F-SHAPE PORTABLE CONCRETE BARRIER WITH X-BOLT CONNECTION

ISO 17025 Laboratory
Testing Certificate # 2821.01

Crash testing performed at:
TTI Proving Ground
1254 Avenue A, Building 7091
Bryan, TX 77807

Test Report 0-7086-R1

Cooperative Research Program

TEXAS A&M TRANSPORTATION INSTITUTE
COLLEGE STATION, TEXAS

TEXAS DEPARTMENT OF TRANSPORTATION

in cooperation with the
Federal Highway Administration and the
Texas Department of Transportation
http://tti.tamu.edu/documents/0-7086-R1.pdf

Technical Report Documentation Page

1. Report No. FHWA/TX-21/0-7086-R1	2. Government Accession No.	3. Recipient's Catalog No.
4. Title and Subtitle *MASH* TEST 3-11 ON F-SHAPE PORTABLE CONCRETE BARRIER WITH X-BOLT CONNECTION		5. Report Date Published: October 2021 6. Performing Organization Code
7. Author(s) Roger P. Bligh, Wanda L. Menges, William J. L. Schroeder, Bill L. Griffith, Sarah A. Wegenast, and Darrell L. Kuhn		8. Performing Organization Report No. Report 0-7086-R1
9. Performing Organization Name and Address Texas A&M Transportation Institute The Texas A&M University System College Station, Texas 77843-3135		10. Work Unit No. (TRAIS) 11. Contract or Grant No. Project 0-7086
12. Sponsoring Agency Name and Address Texas Department of Transportation Research and Technology Implementation Office 125 E. 11th Street Austin, Texas 78701-2483		13. Type of Report and Period Covered Technical Report: September 2020–August 2021 14. Sponsoring Agency Code

15. Supplementary Notes

Project performed in cooperation with the Texas Department of Transportation and the Federal Highway Administration.
Project Title: Roadside Safety Device Analysis, Testing, and Evaluation Program
URL: http://tti.tamu.edu/documents/0-7086-R1.pdf

16. Abstract

An implementation agreement was adopted by the American Association of State Highway and Transportation Officials (AASHTO) and the Federal Highway Administration that coincided with the publication of the second edition of the AASHTO *Manual for Assessing Safety Hardware* (*MASH*). Subsequently, numerous roadside safety devices have been crash tested to evaluate compliance with *MASH* impact performance criteria.

The Texas Department of Transportation used this *MASH* testing need as an opportunity to improve the design of some devices in its roadside safety standards. One of the devices for which improvements were investigated is the portable concrete barrier with X-bolt connection. The fabrication cost of this barrier has limited its implementation to date. Several changes were made to the design to help optimize its fabrication prior to *MASH* testing.

The modified F-shape portable concrete barrier with X-bolt connection subsequently met the performance criteria for *MASH* Test 3-11 for longitudinal barriers.

17. Key Words Longitudinal Barrier, Median Barrier, Portable Concrete Barrier, PCB, Temporary Barrier, TCB, Crash Testing, Roadside Safety, *MASH*	18. Distribution Statement No restrictions. This document is available to the public through NTIS: National Technical Information Service Alexandria, Virginia http://www.ntis.gov

19. Security Classif. (of this report) Unclassified	20. Security Classif. (of this page) Unclassified	21. No. of Pages 60	22. Price

Form DOT F 1700.7 (8-72) Reproduction of completed page authorized

MASH TEST 3-11 ON F-SHAPE PORTABLE CONCRETE BARRIER WITH X-BOLT CONNECTION

by

Roger P. Bligh, Ph.D., P.E.
Senior Research Engineer
Texas A&M Transportation Institute

Wanda L. Menges
Research Specialist
Texas A&M Transportation Institute

William J. L. Schroeder
Engineering Research Associate
Texas A&M Transportation Institute

Bill L. Griffith
Research Specialist
Texas A&M Transportation Institute

Sarah A. Wegenast
Research Associate
Texas A&M Transportation Institute

and

Darrell L. Kuhn, P.E.
Research Specialist
Texas A&M Transportation Institute

Report 0-7086-R1
Project 0-7086
Project Title: Roadside Safety Device Analysis, Testing, and Evaluation Program

Performed in cooperation with the
Texas Department of Transportation
and the
Federal Highway Administration

Published: October 2021

TEXAS A&M TRANSPORTATION INSTITUTE
College Station, Texas 77843-3135

DISCLAIMER

This research was performed in cooperation with the Texas Department of Transportation (TxDOT) and the Federal Highway Administration (FHWA). The contents of this report reflect the views of the authors, who are responsible for the facts and the accuracy of the data presented herein. The contents do not necessarily reflect the official view or policies of FHWA or TxDOT. This report does not constitute a standard, specification, or regulation.

This report is not intended for construction, bidding, or permit purposes. The engineer in charge of the project was Roger P. Bligh, P.E. #78550.

The United States Government and the State of Texas do not endorse products or manufacturers. Trade or manufacturers' names appear herein solely because they are considered essential to the object of this report.

TTI PROVING GROUND DISCLAIMER

The results of the crash testing reported herein apply only to the article tested.

REPORT AUTHORIZATION

DocuSigned by:
Bill Griffith
44A122CB2A1845B...

Bill L. Griffith, Research Specialist
Deputy Quality Manager

DocuSigned by:
Darrell Kuhn
D4CC23E85D5D4E7...

Darrell L. Kuhn, P.E., Research Specialist
Quality Manager

DocuSigned by:
Matt Robinson
EAA22BFA5BED417...

Matthew N. Robinson, Research Specialist
Test Facility Manager & Technical Manager

DocuSigned by:
Roger Bligh
DACC245BADEB436...

Roger P. Bligh, Ph.D., P.E.
Senior Research Engineer

ACKNOWLEDGMENTS

This project was conducted in cooperation with TxDOT and FHWA. The project team would like to thank Mr. Wade Odell, P.E., with the TxDOT Research and Technology Implementation Office, for his assistance as project manager. Additionally, the contributions and input of Mr. Ken Mora, P.E., with the TxDOT Design Division, were instrumental to the success of the project and are greatly appreciated.

TABLE OF CONTENTS

Page

LIST OF FIGURES

Page

LIST OF TABLES

Page

SI* (MODERN METRIC) CONVERSION FACTORS

APPROXIMATE CONVERSIONS TO SI UNITS

Symbol	When You Know	Multiply By	To Find	Symbol
		LENGTH		
in	inches	25.4	millimeters	mm
ft	feet	0.305	meters	m
yd	yards	0.914	meters	m
mi	miles	1.61	kilometers	km
		AREA		
in^2	square inches	645.2	square millimeters	mm^2
ft^2	square feet	0.093	square meters	m^2
yd^2	square yards	0.836	square meters	m^2
ac	acres	0.405	hectares	ha
mi^2	square miles	2.59	square kilometers	km^2
		VOLUME		
fl oz	fluid ounces	29.57	milliliters	mL
gal	gallons	3.785	liters	L
ft^3	cubic feet	0.028	cubic meters	m^3
yd^3	cubic yards	0.765	cubic meters	m^3
	NOTE: volumes greater than 1000L shall be shown in m^3			
		MASS		
oz	ounces	28.35	grams	g
lb	pounds	0.454	kilograms	kg
T	short tons (2000 lb)	0.907	megagrams (or metric ton”)	Mg (or “t”)
		TEMPERATURE (exact degrees)		
°F	Fahrenheit	5(F-32)/9 or (F-32)/1.8	Celsius	°C
		FORCE and PRESSURE or STRESS		
lbf	poundforce	4.45	newtons	N
lbf/in^2	poundforce per square inch	6.89	kilopascals	kPa

APPROXIMATE CONVERSIONS FROM SI UNITS

Symbol	When You Know	Multiply By	To Find	Symbol
		LENGTH		
mm	millimeters	0.039	inches	in
m	meters	3.28	feet	ft
m	meters	1.09	yards	yd
km	kilometers	0.621	miles	mi
		AREA		
mm^2	square millimeters	0.0016	square inches	in^2
m^2	square meters	10.764	square feet	ft^2
m^2	square meters	1.195	square yards	yd^2
ha	hectares	2.47	acres	ac
km^2	Square kilometers	0.386	square miles	mi^2
		VOLUME		
mL	milliliters	0.034	fluid ounces	oz
L	liters	0.264	gallons	gal
m^3	cubic meters	35.314	cubic feet	ft^3
m^3	cubic meters	1.307	cubic yards	yd^3
		MASS		
g	grams	0.035	ounces	oz
kg	kilograms	2.202	pounds	lb
Mg (or “t”)	megagrams (or “metric ton”)	1.103	short tons (2000lb)	T
		TEMPERATURE (exact degrees)		
°C	Celsius	1.8C+32	Fahrenheit	°F
		FORCE and PRESSURE or STRESS		
N	newtons	0.225	poundforce	lbf
kPa	kilopascals	0.145	poundforce per square inch	lb/in^2

*SI is the symbol for the International System of Units

Chapter 1. INTRODUCTION

1.1. BACKGROUND

An implementation agreement was adopted by the American Association of State Highway and Transportation Officials (AASHTO) and the Federal Highway Administration (FHWA) that coincided with the publication of the second edition of the AASHTO *Manual for Assessing Safety Hardware* (*MASH*) (*1*). Subsequently, numerous roadside safety devices have been crash tested to evaluate compliance with *MASH* impact performance criteria.

The Texas Department of Transportation (TxDOT) used this *MASH* testing need as an opportunity to improve the design of some devices in its roadside safety standards. One of the devices for which improvements were desired is a portable concrete barrier with X-bolt connection. Some of the details incorporated into this barrier system result in a relatively high fabrication cost that has limited its implementation to date.

In a previous research project, a 42-inch-tall single-slope precast barrier system with X-bolt connection was developed (*2, 3*). Changes were made to the X-bolt connection design to help optimize its fabrication. Specifically, the welded X-bolt connection assemblies, which consisted of an embedded steel connection plate, a welded steel connection pipe through which the threaded rod was inserted, and two welded deformed bar anchors, were eliminated. The embedded steel connection plate was replaced with a plate washer, and the steel connection pipe was replaced with a PVC pipe. Some additional U-bars were placed longitudinally at the ends of the segment for additional structural capacity. The single-slope precast concrete barrier with modified X-bolt connection was successfully tested to *MASH* Test Level 4 (TL-4) impact conditions in both restrained and freestanding configurations (*2, 3*).

TxDOT wished to incorporate similar connection details into the F-shape precast concrete barrier system. The reduced fabrication cost of the modified design may lead to more widespread implementation of this low-deflection portable concrete barrier system. The low deflection provides advantages in some work zones by reducing the buffer or offset distance required between the barrier and work zone personnel and equipment.

1.2. OBJECTIVE

The objective of the testing reported herein was to assess the performance of a freestanding, precast F-shape barrier with modified X-bolt connection according to the safety-performance evaluation guidelines included in AASHTO *MASH* for TL-3 longitudinal barriers. This report presents details of the crash test performed, an assessment of the results, and implementation recommendations for the precast F-shape barrier with modified X-bolt connection.

Chapter 2. SYSTEM DETAILS

2.1. TEST ARTICLE AND INSTALLATION DETAILS

The test installation consisted of seven 30-ft-long precast steel reinforced portable concrete barrier (PCB) segments placed end to end, for a total length of 210 ft. The barriers were connected to each other using two 29-inch-long sections of a ⅞-inch-diameter B7 threaded rod and associated hardware at each joint. The threaded rod passes through PVC pipe cast into the ends of the barrier segments at two different elevations that form an "X" in plan view. Recesses were cast in the exterior faces of the barriers so that the ends of the threaded rod and associated hardware did not protrude past the exterior faces. All barriers were freestanding (not secured to the concrete apron).

The barrier segments measured 24 inches wide at bottom, 9½ inches wide at top, and 32 inches tall. The traffic and field side faces were symmetric, with an F-shape profile.

Figure 2.1 presents the overall information on the F-shape PCB with X-bolt connection, and Figure 2.2 provides photographs of the test installation. Appendix A provides further details on the F-shape PCB with X-bolt connection. The barrier segments were fabricated by Summit Precast Concrete based on drawings provided by the Texas A&M Transportation Institute (TTI) Proving Ground. The barriers were installed by TTI Proving Ground personnel.

2.2. DESIGN MODIFICATIONS DURING TESTS

No modifications were made to the installation during the testing phase.

2.3. MATERIAL SPECIFICATIONS

The specified compressive strength of the TxDOT Class H concrete used in the F-shape PCB with X-bolt connection was 3600 psi. On April 16, 2021, the day after the test, the average compressive strength of the concrete for barrier segment 3 was 5750 psi and for barrier segment 4 was 6410 psi.

Appendix B provides material certification documents for the materials used to construct the F-shape PCB with X-bolt connection.

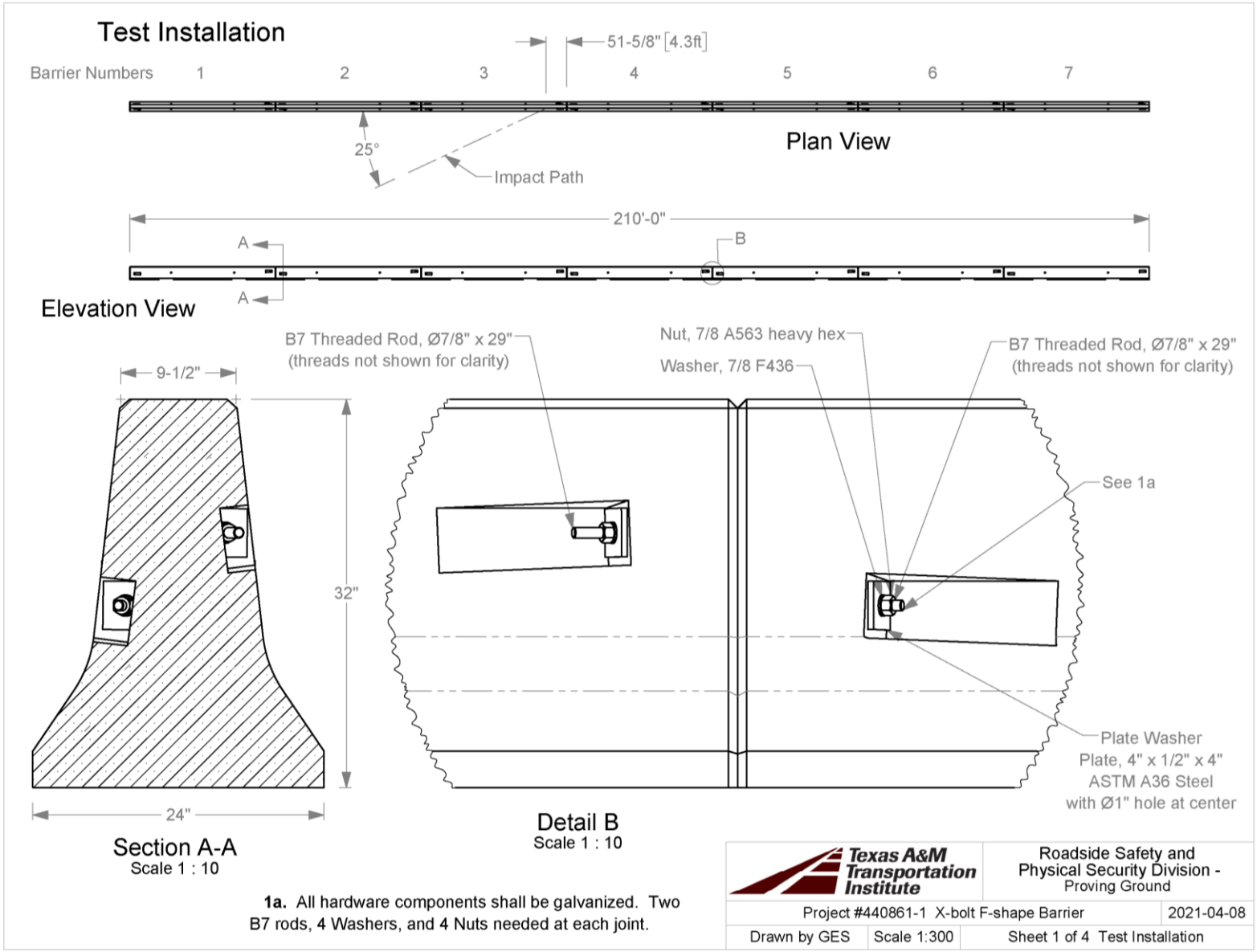

Figure 2.1. Details of F-Shape PCB with X-Bolt Connection.

Figure 2.2. F-Shape PCB with X-Bolt Connection prior to Testing.

Chapter 3. TEST REQUIREMENTS AND EVALUATION CRITERIA

3.1. CRASH TEST PERFORMED/MATRIX

Table 3.1 shows the test conditions and evaluation criteria for *MASH* TL-3 for longitudinal barriers. This report presents testing of the F-shape PCB with X-bolt connection in accordance with *MASH* Test 3-11 evaluation criteria. The target critical impact point (CIP) for *MASH* Test 3-11 was determined using the information provided in *MASH* Section 2.3.2.1 and *MASH* Table 2-7, which is depicted in Figure 3.1.

Table 3.1. Test Conditions and Evaluation Criteria Specified for *MASH* TL-3 Longitudinal Barriers.

Test Article	Test Designation	Test Vehicle	Impact Conditions		Evaluation Criteria
			Speed	Angle	
Longitudinal Barrier	3-10	1100C	62 mi/h	25°	A, D, F, H, I
	3-11	2270P	62 mi/h	25°	A, D, F, H, I

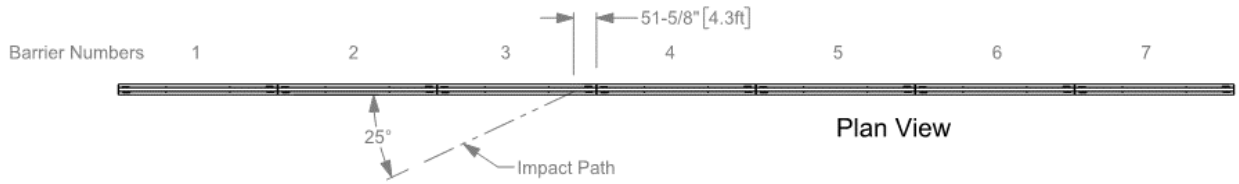

Figure 3.1. Target CIP for *MASH* Test 3-11 on F-Shape PCB with X-Bolt Connection.

MASH also recommends performing Test 3-10 with the small passenger car. However, based on the performance of the F-shape barrier in previous testing, Test 3-10 was not considered necessary. Further discussion of the rationale for this conclusion is provided in Chapter 7.

The crash tests and data analysis procedures were in accordance with guidelines presented in *MASH*. Chapter 4 presents brief descriptions of these procedures.

3.2. EVALUATION CRITERIA

The appropriate safety evaluation criteria from Tables 2-2 and 5-1 of *MASH* were used to evaluate the crash test reported herein. Table 3.1 lists the test conditions and evaluation criteria required for *MASH* TL-3, and Table 3.2 provides detailed information on the evaluation criteria. An evaluation of the crash test results is presented in Chapter 6.

Table 3.2. Evaluation Criteria Required for *MASH* TL-3 Longitudinal Barriers.

Evaluation Factors	Evaluation Criteria
Structural Adequacy	*A. Test article should contain and redirect the vehicle or bring the vehicle to a controlled stop; the vehicle should not penetrate, underride, or override the installation although controlled lateral deflection of the test article is acceptable.*
Occupant Risk	*D. Detached elements, fragments, or other debris from the test article should not penetrate or show potential for penetrating the occupant compartment, or present undue hazard to other traffic, pedestrians, or personnel in a work zone.* *Deformations of, or intrusions into, the occupant compartment should not exceed limits set forth in Section 5.2.2 and Appendix E of MASH.*
	F. The vehicle should remain upright during and after collision. The maximum roll and pitch angles are not to exceed 75 degrees.
	H. Occupant impact velocities (OIV) should satisfy the following limits: Preferred value of 30 ft/s, or maximum allowable value of 40 ft/s.
	I. The occupant ridedown accelerations should satisfy the following: Preferred value of 15.0 g, or maximum allowable value of 20.49 g.

Chapter 4. TEST CONDITIONS

4.1. TEST FACILITY

The full-scale crash test reported herein was performed at the TTI Proving Ground, an International Standards Organization (ISO)/International Electrotechnical Commission (IEC) 17025-accredited laboratory with American Association for Laboratory Accreditation (A2LA) Mechanical Testing Certificate 2821.01. The full-scale crash test was performed according to TTI Proving Ground quality procedures, as well as *MASH* guidelines and standards.

The test facilities of the TTI Proving Ground are located on The Texas A&M University System RELLIS Campus, which consists of a 2000-acre complex of research and training facilities situated 10 mi northwest of the flagship campus of Texas A&M University. The site, formerly a United States Army Air Corps base, has large expanses of concrete runways and parking aprons well suited for experimental research and testing in the areas of vehicle performance and handling, vehicle-roadway interaction, highway pavement durability and efficacy, and roadside safety hardware and perimeter protective device evaluation. The site selected for construction and testing of the F-shape PCB with X-bolt connection was along the surface of an out-of-service apron. The apron consists of an unreinforced jointed-concrete pavement in 12.5-ft × 15-ft blocks nominally 6 inches deep. The aprons were built in 1942, and the joints have some displacement but are otherwise flat and level.

4.2. VEHICLE TOW AND GUIDANCE SYSTEM

The vehicle was towed into the test installation using a steel cable guidance and reverse tow system. A steel cable for guiding the test vehicle was tensioned along the path, anchored at each end, and threaded through an attachment to the front wheel of the test vehicle. An additional steel cable was connected to the test vehicle, passed around a pulley near the impact point and through a pulley on the tow vehicle, and then anchored to the ground such that the tow vehicle moved away from the test site. A 2:1 speed ratio between the test and tow vehicle existed with this system. Just prior to impact with the installation, the test vehicle was released and ran unrestrained. The vehicle remained freewheeling (i.e., no steering or braking inputs) until it cleared the immediate area of the test site.

4.3. DATA ACQUISITION SYSTEM

4.3.1. Vehicle Instrumentation and Data Processing

The test vehicle was instrumented with a self-contained onboard data acquisition system. The signal conditioning and acquisition system is a 16-channel Tiny Data Acquisition System (TDAS) Pro produced by Diversified Technical Systems Inc. The accelerometers, which measure the x, y, and z axis of vehicle acceleration, are strain gauge type with linear millivolt output proportional to acceleration. Angular rate sensors, measuring vehicle roll, pitch, and yaw rates, are ultra-small, solid-state units designed for crash test service. The TDAS Pro hardware and software conform to the latest SAE J211, Instrumentation for Impact Test. Each of the 16 channels is capable of providing precision amplification, scaling, and filtering based on transducer specifications and calibrations. During the test, data are recorded from each channel at

a rate of 10,000 samples per second with a resolution of one part in 65,536. Once data are recorded, internal batteries back up the data inside the unit in case the primary battery cable is severed. Initial contact of the pressure switch on the vehicle bumper provides a time zero mark and initiates the recording process. After each test, the data are downloaded from the TDAS Pro unit into a laptop computer at the test site. The Test Risk Assessment Program (TRAP) software then processes the raw data to produce detailed reports of the test results.

Each of the TDAS Pro units is returned to the factory annually for complete recalibration and to ensure that all instrumentation used in the vehicle conforms to the specifications outlined by SAE J211. All accelerometers are calibrated annually by means of an ENDEVCO® 2901 precision primary vibration standard. This standard and its support instruments are checked annually and receive a National Institute of Standards Technology (NIST) traceable calibration. The rate transducers used in the data acquisition system receive calibration via a Genisco Rate-of-Turn table. The subsystems of each data channel are also evaluated annually, using instruments with current NIST traceability, and the results are factored into the accuracy of the total data channel per SAE J211. Calibrations and evaluations are also made anytime data are suspect. Acceleration data are measured with an expanded uncertainty of ±1.7 percent at a confidence factor of 95 percent (k = 2).

TRAP uses the data from the TDAS Pro to compute the occupant/compartment impact velocities, time of occupant/compartment impact after vehicle impact, and highest 10-millisecond (ms) average ridedown acceleration. TRAP calculates change in vehicle velocity at the end of a given impulse period. In addition, maximum average accelerations over 50-ms intervals in each of the three directions are computed. For reporting purposes, the data from the vehicle-mounted accelerometers are filtered with an SAE Class 180-Hz low-pass digital filter, and acceleration versus time curves for the longitudinal, lateral, and vertical directions are plotted using TRAP.

TRAP uses the data from the yaw, pitch, and roll rate transducers to compute angular displacement in degrees at 0.0001-s intervals, and then plots yaw, pitch, and roll versus time. These displacements are in reference to the vehicle-fixed coordinate system with the initial position and orientation being initial impact. Rate-of-rotation data are measured with an expanded uncertainty of ±0.7 percent at a confidence factor of 95 percent (k = 2).

4.3.2. Anthropomorphic Dummy Instrumentation

According to *MASH*, use of a dummy in the 2270P vehicle is optional, and no dummy was used in the test.

4.3.3. Photographic Instrumentation Data Processing

Photographic coverage of the test included three digital high-speed cameras:

- One placed overhead with a field of view perpendicular to the ground and directly over the impact point.
- One placed upstream from the installation at an angle to have a field of view of the interaction of the rear of the vehicle with the installation.
- A third placed with a field of view parallel to and aligned with the installation at the downstream end.

A flashbulb on the impacting vehicle was activated by a pressure-sensitive tape switch to indicate the instant of contact with the F-shape PCB with X-bolt connection. The flashbulb was visible from each camera. The video files from these digital high-speed cameras were analyzed to observe phenomena occurring during the collision and to obtain time-event, displacement, and angular data. A digital camera recorded and documented conditions of each test vehicle and the installation before and after the test.

Chapter 5. *MASH* TEST 3-11 (CRASH TEST NO. 440861-01-1)

5.1. TEST DESIGNATION AND ACTUAL IMPACT CONDITIONS

MASH Test 3-11 involves a 2270P vehicle weighing 5000 lb ± 110 lb impacting the CIP of the longitudinal barrier at an impact speed of 62 mi/h ± 2.5 mi/h and an angle of 25 degrees ± 1.5 degrees. The CIP for *MASH* Test 3-11 on the F-shape PCB with X-bolt connection was 4.3 ft ± 1 ft upstream of the centerline of the joint between barrier segments 3 and 4. Figure 3.1 and Figure 5.1 depict the target impact setup.

Figure 5.1. F-Shape PCB with X-Bolt Connection/Test Vehicle Geometrics for Test No. 440861-01-1.

The 2270P vehicle weighed 5031 lb, and the actual impact speed and angle were 62.4 mi/h and 24.8 degrees. The actual impact point was 4.0 ft upstream of the centerline of the joint between barrier segments 3 and 4. Minimum target impact severity (IS) was 106 kip-ft, and actual IS was 115 kip-ft.

5.2. WEATHER CONDITIONS

The test was performed on the morning of April 15, 2021. Weather conditions at the time of testing were as follows: wind speed: 9 mi/h; wind direction: 65 degrees (vehicle was traveling at a heading of 350 degrees); temperature: 65°F; relative humidity: 86 percent.

5.3. TEST VEHICLE

Figure 5.2 shows the 2016 RAM 1500 pickup truck used for the crash test. The vehicle's test inertia weight was 5031 lb, and its gross static weight was 5031 lb. The height to the lower edge of the vehicle bumper was 11.75 inches, and the height to the upper edge of the bumper was 27.0 inches. The height to the vehicle's center of gravity was 28.25 inches. Tables C.1 and C.2 in Appendix C.1 give additional dimensions and information on the vehicle. The vehicle was directed into the installation using a cable reverse tow and guidance system and was released to be freewheeling and unrestrained just prior to impact.

Figure 5.2. Test Vehicle before Test No. 440861-01-1.

5.4. TEST DESCRIPTION

Table 5.1 lists events that occurred during Test No. 440861-01-1. Figures C.1 and C.2 in Appendix C.2 present sequential photographs during the test.

Table 5.1. Events during Test No. 440861-01-1.

Time (s)	Events
0.0000	Vehicle impacts the barrier
0.0130	Left front tire lifts off the pavement
0.0380	Vehicle begins to redirect
0.0910	Right front tire lifts off the pavement
0.1230	Right rear tire lifts off the pavement
0.2220	Vehicle travels parallel with the barrier
0.2340	Left rear bumper impacts the barrier
0.4370	Left front tire makes contact with the pavement
0.5580	Right front tire makes contact with the pavement
1.0220	Left front tire makes secondary contact with the barrier

For longitudinal barriers, it is desirable for the vehicle to redirect and exit the barrier within the exit box criteria (not less than 32.8 ft downstream from loss of contact for cars and pickups). The test vehicle exited within the exit box criteria defined in *MASH*. Brakes on the vehicle were applied at 3.0 s after impact, and the vehicle came to rest 239 ft downstream of the point of impact and 23 ft toward the field side.

5.5. DAMAGE TO TEST INSTALLATION

Figure 5.3 and Figure 5.4 show the damage to the F-shape PCB with X-bolt connection. There was scuffing from multiple impacts downstream from the initial loss of contact. One of the bolts connecting barrier 3 to barrier 2 was deformed, and both bolts at the joint of barriers 3 and 4 were deformed. The red lines shown in the photos indicate cracks observed post-impact.

Table 5.2 and Table 5.3 provide barrier movement and barrier damage, respectively. Working width* was 48.3 inches, and height of working width was 3.0 inches. Maximum dynamic deflection during the test was 26.6 inches, and maximum permanent deformation was 25.5 inches.

Figure 5.3. F-Shape PCB with X-Bolt Connection after Test No. 440861-01-1.

* Per *MASH*, "The working width is the maximum dynamic lateral position of any major part of the system or vehicle. These measurements are all relative to the pre-impact traffic face of the test article." In other words, working width is the total barrier width plus the maximum dynamic intrusion of any portion of the barrier or test vehicle past the field side edge of the barrier.

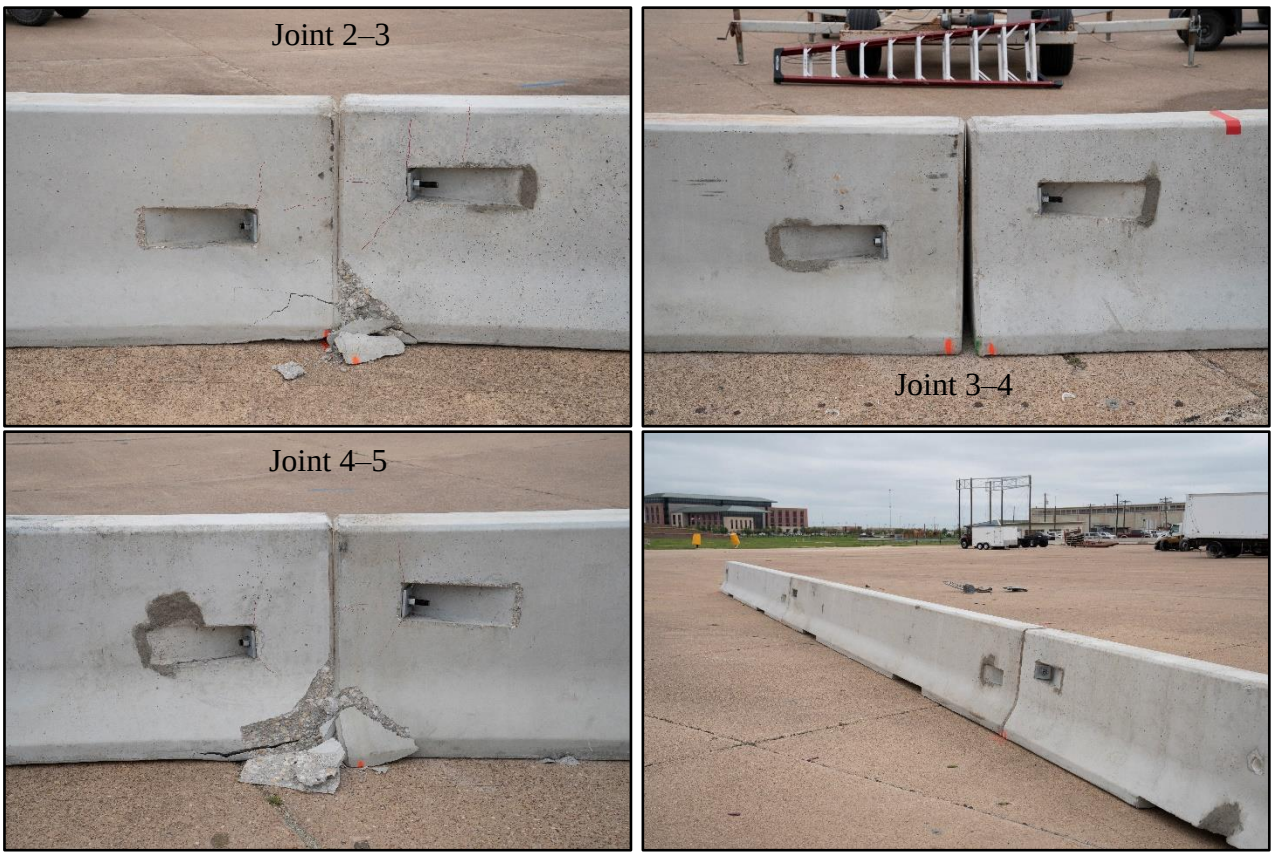

Figure 5.4. Field Side of F-Shape PCB with X-Bolt Connection after Test No. 440861-01-1.

Table 5.2. Barrier Movement and Damage after Test No. 440861-01-1.

Joint	Movement			Notes
	T/S	F/S	D/S	
1	—	—	—	—
1–2	—	—	—	—
2–3	—	¾ inch	2 inches	Cracks at the T/S & F/S X-bolt locations
3–4	—	25½ inches	—	Cracks at F/S X-bolt locations
4–5	—	3 inches	—	Cracks at the T/S & F/S X-bolt locations
5–6	¾ inch	—	—	—
6–7	—	¼ inch	—	—
7	—	—	—	—

Note: T/S = toward traffic side; F/S = toward field side; D/S = downstream movement; — = no data to report.

Table 5.3. Barrier Damage after Test No. 440861-01-1.

Barrier	Spalling Location	Cracking Location	Notes
1	—	—	—
2	Downstream Field Side	—	—
3	Downstream Traffic Side	Upstream Field Side	Exposed rebar; 30-inch piece of concrete broken off from traffic side toe
4	Downstream Field Side	—	Scuffing and gouging on traffic side
5	Upstream Field Side	—	—
6	—	Upstream Field Side	Gouging at downstream scupper on traffic side
7	—	—	—

Note: — = no data to report.

5.6. DAMAGE TO TEST VEHICLE

Figure 5.5 shows the damage sustained by the vehicle. The front bumper, hood, grill, left front fender, left front tire and rim, left front and rear doors, left front corner of the floor pan, left rear cab corner, left rear exterior bed, left rear tire and rim, and rear bumper were damaged. No fuel tank damage was observed. No windshield damage was observed. Maximum exterior crush to the vehicle was 11.0 inches in the side plane at the left front corner at bumper height. Maximum occupant compartment deformation was 1.0 inch in the left front firewall/toe pan area. Figure 5.6 shows the interior of the vehicle. Tables C.3 and C.4 in Appendix C.1 provide exterior crush and occupant compartment measurements.

Figure 5.5. Test Vehicle after Test No. 440861-01-1.

Figure 5.6. Interior of Test Vehicle after Test No. 440861-01-1.

5.7. OCCUPANT RISK FACTORS

Data from the accelerometers were digitized for evaluation of occupant risk, and the results are shown in Table 5.4. Figure C.3 in Appendix C.3 shows the vehicle angular displacements, and Figures C.4 through C.6 in Appendix C.4 show acceleration versus time traces. Figure 5.7 summarizes pertinent information from the test.

Table 5.4. Occupant Risk Factors for Test No. 440861-01-1.

Occupant Risk Factor	Value	Time
Occupant Impact Velocity (OIV)		
Longitudinal	17.6 ft/s	at 0.0971 s on left side of interior
Lateral	22.7 ft/s	
Occupant Ridedown Accelerations		
Longitudinal	4.2 g	0.2527–0.2627 s
Lateral	11.0 g	0.2565–0.2665 s
Theoretical Head Impact Velocity (THIV)	8.8 m/s	at 0.0940 s on left side of interior
Acceleration Severity Index (ASI)	1.7	0.0529–0.1029 s
Maximum 50-ms Moving Average		
Longitudinal	−8.8 g	0.0228–0.0728 s
Lateral	12.3 g	0.0320–0.0820 s
Vertical	−3.6 g	0.0233–0.0733 s
Maximum Roll, Pitch, and Yaw Angles		
Roll	11°	0.4922 s
Pitch	8°	0.6045 s
Yaw	31°	0.2763 s

0.000 s

0.200 s

0.400 s

0.600 s

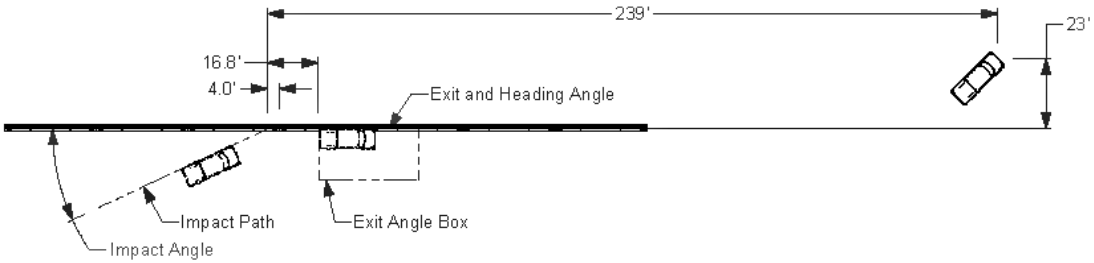

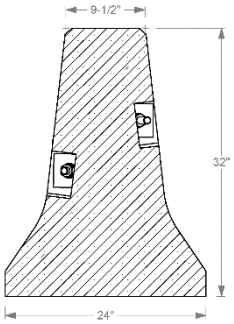

Section A-A

General Information
- Test Agency ..... Texas A&M Transportation Institute (TTI)
- Test Standard Test No. ..... MASH Test 3-11
- TTI Test No. 440861-01-1
- Test Date 2021-04-15

Test Article
- Type ..... Longitudinal Barrier—PCB
- Name ..... F-shape PCB with X-bolt connection
- Installation Length ..... 210 ft—seven 30-ft segments
- Material or Key Elements ... 32-inch-tall F-shape portable concrete barrier; 7/8-inch diameter threaded rod forms X-bolt connection

Soil Type and Condition ..... Concrete pavement, damp

Test Vehicle
- Type/Designation 2270P
- Make and Model ..... 2016 RAM 1500 Pickup
- Curb ..... 5137 lb
- Test Inertial ..... 5031 lb
- Dummy ..... No dummy
- Gross Static ..... 5031 lb

Impact Conditions
- Speed ..... 62.4 mi/h
- Angle ..... 24.8°
- Location/Orientation ..... 4.0 ft upstream of joint 3/4

Impact Severity ..... 115 kip-ft

Exit Conditions
- Speed ..... Out of view
- Trajectory/Heading Angle ... Along barrier

Occupant Risk Values
- Longitudinal OIV ..... 17.6 ft/s
- Lateral OIV ..... 22.7 ft/s
- Longitudinal Ridedown ..... 4.2 g
- Lateral Ridedown ..... 11.0 g
- THIV ..... 8.8 m/s
- ASI 1.7

Max. 0.050-s Average
- Longitudinal ..... −8.8 g
- Lateral ..... 12.3 g
- Vertical ..... −3.6 g

Post-Impact Trajectory
- Stopping Distance ..... 239 ft downstream
23 ft twd field side

Vehicle Stability
- Maximum Roll Angle ..... 11°
- Maximum Pitch Angle ..... 8°
- Maximum Yaw Angle ..... 31°
- Vehicle Snagging ..... No
- Vehicle Pocketing ..... No

Test Article Deflections
- Dynamic ..... 26.6 inches
- Permanent ..... 25.5 inches
- Working Width ..... 48.3 inches
- Height of Working Width ..... 3.0 inches

Vehicle Damage
- VDS 11LFQ4
- CDC 11FLEW3
- Max. Exterior Deformation ..... 11.0 inches
- OCDI LF0010000
- Max. Occupant Compartment Deformation ..... 1.0 inch

Figure 5.7. Summary of Results for *MASH* Test 3-11 on F-Shape PCB with X-Bolt Connection.

Chapter 6. SUMMARY AND CONCLUSIONS

6.1. ASSESSMENT OF TEST RESULTS

The crash test reported herein was performed in accordance with *MASH* Test 3-11. Table 6.1 provides an assessment of the test based on the applicable safety evaluation criteria for *MASH* Test 3-11 for longitudinal barriers.

6.2. CONCLUSIONS

The F-shape PCB with X-bolt connection met the performance criteria for *MASH* Test 3-11 for longitudinal barriers.

Table 6.1. Performance Evaluation Summary for *MASH* Test 3-11 on F-Shape PCB with X-Bolt Connection.

Test Agency: Texas A&M Transportation Institute | Test No.: 440861-01-1 | Test Date: 2021-04-15

***MASH* Test 3-11 Evaluation Criteria**	**Test Results**	**Assessment**
Structural Adequacy		
A. Test article should contain and redirect the vehicle or bring the vehicle to a controlled stop; the vehicle should not penetrate, underride, or override the installation although controlled lateral deflection of the test article is acceptable.	The F-shape PCB with X-bolt connection contained and redirected the 2270P vehicle. The vehicle did not penetrate, underride, or override the installation. Maximum dynamic deflection during the test was 26.6 inches.	Pass
Occupant Risk		
D. Detached elements, fragments, or other debris from the test article should not penetrate or show potential for penetrating the occupant compartment, or present an undue hazard to other traffic, pedestrians, or personnel in a work zone.	Some concrete spalling occurred at several joints; however, this debris did not penetrate or show potential for penetrating the occupant compartment or present an undue hazard to others in the area.	Pass
Deformations of, or intrusions into, the occupant compartment should not exceed limits set forth in Section 5.2.2 and Appendix E of MASH.	Maximum occupant compartment deformation was 1.0 inch in the left front firewall/toe pan area.	
F. The vehicle should remain upright during and after collision. The maximum roll and pitch angles are not to exceed 75 degrees.	The 2270P vehicle remained upright during and after the collision event. Maximum roll and pitch angles were 11 degrees and 8 degrees.	Pass
H. Occupant impact velocities (OIV) should satisfy the following limits: Preferred value of 30 ft/s, or maximum allowable value of 40 ft/s.	Longitudinal OIV was 17.6 ft/s, and lateral OIV was 22.7 ft/s.	Pass
I. The occupant ridedown accelerations should satisfy the following limits: Preferred value of 15.0 g, or maximum allowable value of 20.49 g.	Longitudinal occupant ridedown acceleration was 4.2 g, and lateral occupant ridedown acceleration was 11.0 g.	Pass

Chapter 7. IMPLEMENTATION*

Based on the results of the testing and evaluation reported herein, the F-shape PCB with X-bolt connection is considered suitable for implementation as a *MASH* TL-3 barrier system. The *MASH* matrix for TL-3 longitudinal barriers consists of two tests: Test 3-11 and Test 3-10. *MASH* Test 3-11 was performed under this project and successfully met all *MASH* evaluation criteria.

MASH also recommends performing Test 3-10 with the small passenger car. However, based on the performance of the F-shape barrier in previous testing, Test 3-10 was not considered necessary. The impact severity for *MASH* Test 3-10 is approximately half that of Test 3-11. Therefore, structural adequacy of the barrier is not an issue, and the barrier will deflect substantially less than in Test 3-11. When *MASH* Test 5-10 (similar impact conditions to *MASH* Test 3-10) was performed on a cast-in-place F-shape barrier with soundwall, all *MASH* criteria were satisfied (*4*). The passenger car was contained and redirected in a stable manner, and occupant risk criteria were below the preferred thresholds in *MASH*. Therefore, *MASH* occupant risk criteria associated with impacting the F-shape PCB with X-bolt connection should be satisfactory. F-shape PCBs have also been successfully tested with the 1100C passenger car in both freestanding and restrained conditions that resulted in dynamic deflections ranging from 3 to 56 inches (*5, 6, 7*). The occupant risk indices for these tests were acceptable, and the maximum roll angle of the vehicle ranged from 9.2 degrees to 25 degrees. Therefore, stability of the 1100C passenger vehicle impacting the F-shape PCB with X-bolt connection under *MASH* Test 3-10 conditions should be satisfactory.

The dynamic deflection for the F-shape PCB with X-bolt connection during *MASH* Test 3-11 was only 26.6 inches. This is significantly lower than the deflection of other connection types included in TxDOT standards. The low deflection makes the F-shape PCB with X-bolt connection suitable for many applications, including as a median barrier or a work zone barrier when such deflections can be accommodated.

Statewide implementation of this barrier can be achieved by TxDOT's Design Division through revision of standard detail sheet CSB(1)-10. The barrier details provided in Appendix A can be used for this purpose.

* The opinions/interpretations identified/expressed in this section of the report are outside the scope of TTI Proving Ground's A2LA Accreditation.

REFERENCES

1. AASHTO. *Manual for Assessing Roadside Safety Hardware, Second Edition.* American Association of State Highway and Transportation Officials, Washington, DC, 2016.
2. W. F. Williams, N. M. Sheikh, W. L. Menges, D. L. Kuhn, and R. P. Bligh. *Crash Test and Evaluation of Restrained Safety-Shape Concrete Barriers on Concrete Bridge Deck.* Test Report 9-1002-15-3, Texas A&M Transportation Institute, College Station, TX, January 2018.
3. N. M. Sheikh, R. P. Bligh, W. L. Menges, D. L. Kuhn, and G. E. Schroeder. *MASH TL-4 Testing and Evaluation of Free-Standing Single Slope Concrete Barrier with Cross-Bolt Connection*. Test Report 0-6968-R5, Texas A&M Transportation Institute, College Station, TX, June 2019.
4. FHWA Safety Roadway Departure Eligibility Letter B-339 (https://safety.fhwa.dot.gov/roadway_dept/countermeasures/reduce_crash_severity/barriers/pdf/b339.pdf).
5. FHWA Safety Roadway Departure Eligibility Letter B-307 (https://safety.fhwa.dot.gov/roadway_dept/countermeasures/reduce_crash_severity/barriers/pdf/b307.pdf).
6. FHWA Safety Roadway Departure Eligibility Letter B-344 (https://safety.fhwa.dot.gov/roadway_dept/countermeasures/reduce_crash_severity/barriers/pdf/b344.pdf).
7. FHWA Safety Roadway Departure Eligibility Letter B-300 (https://safety.fhwa.dot.gov/roadway_dept/countermeasures/reduce_crash_severity/barriers/pdf/b300.pdf).

APPENDIX A. DETAILS OF F-SHAPE PCB WITH X-BOLT CONNECTION

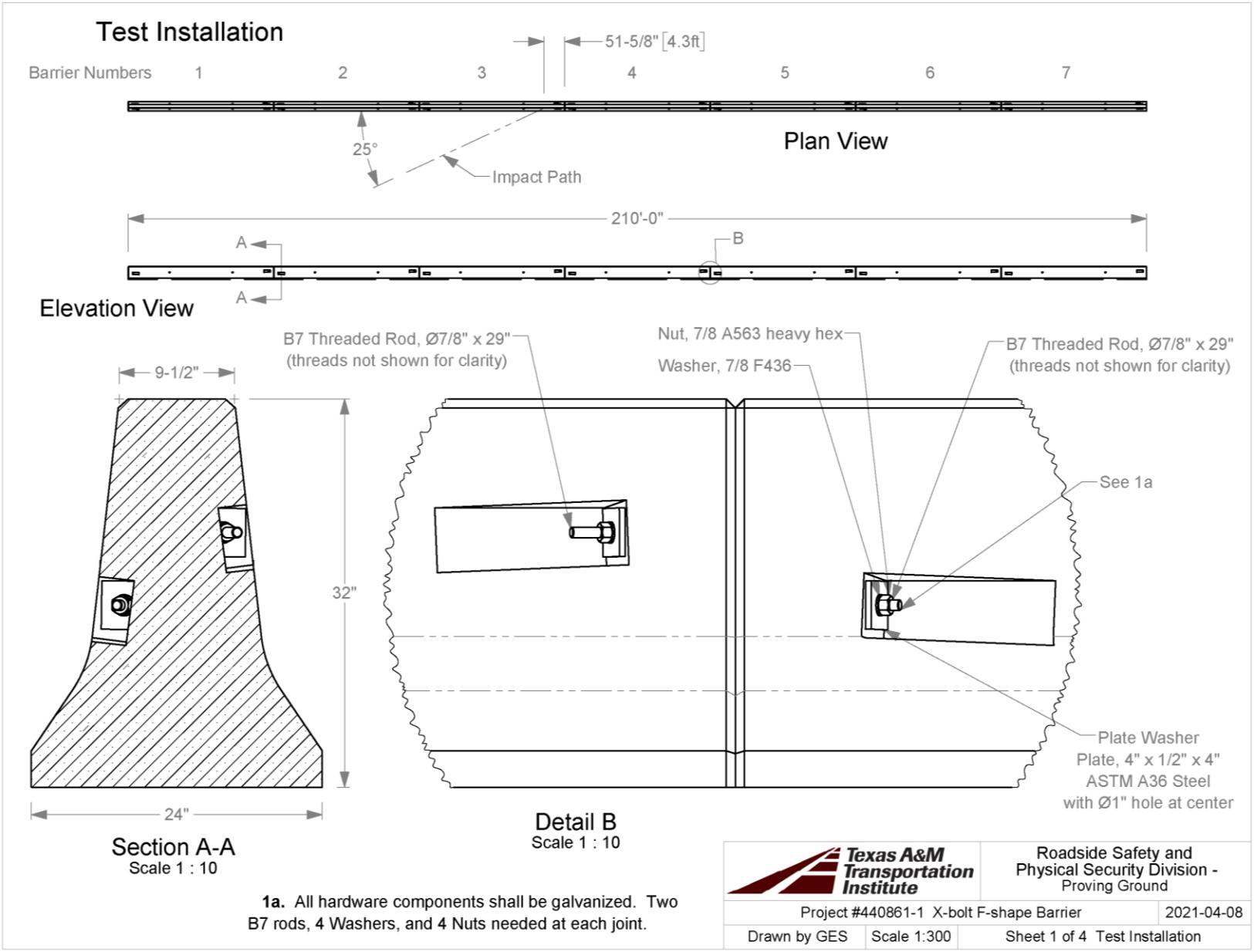

Barrier Details

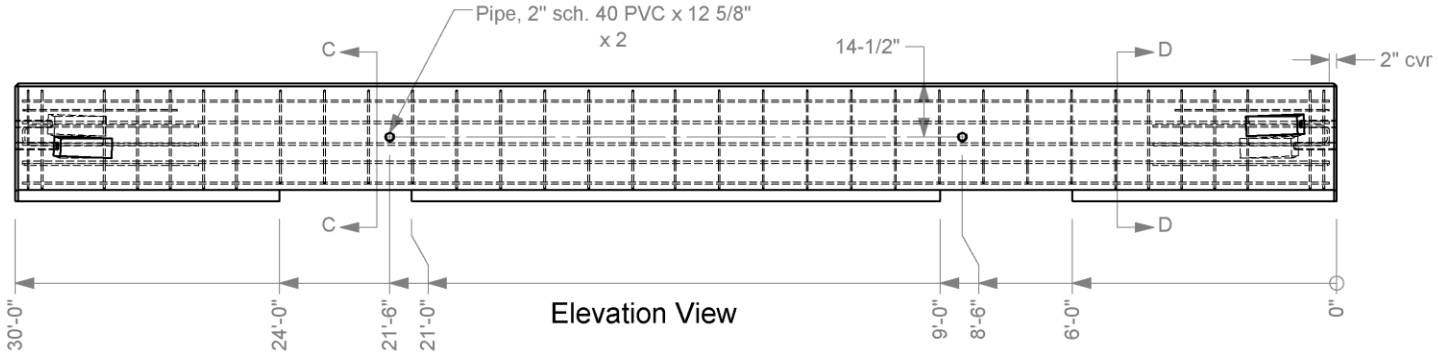

Elevation View

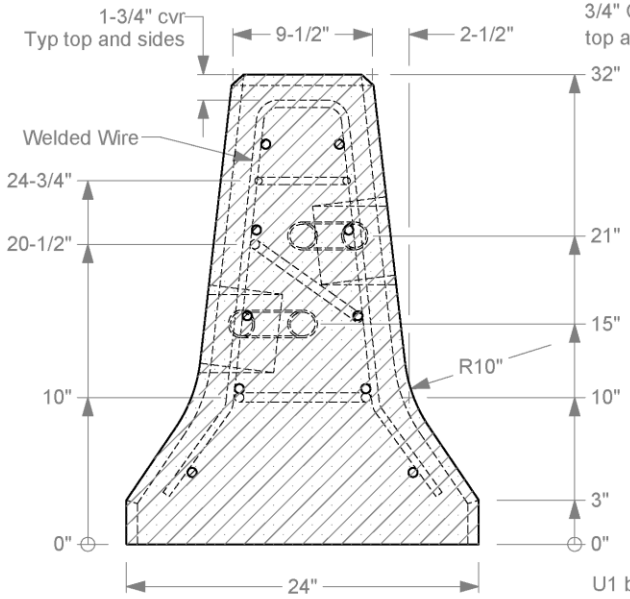

Section D-D
Scale 1 : 10

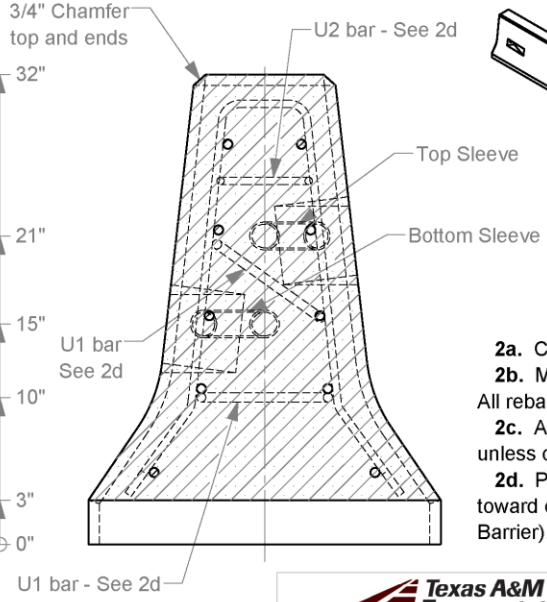

Section C-C
Scale 1 : 10

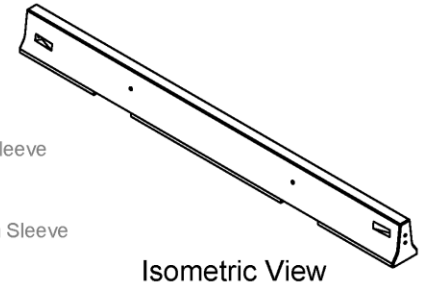

Isometric View

2a. Concrete is TxDOT Class H (3,600 psi).
2b. Minimum rebar lap is 24" for #5 bars. All rebar is grade 60 ASTM A615.
2c. All rebar dimensions are to center of bar unless otherwise indicated by "cvr" (cover).
2d. Place U1 and U2 bars with open end toward center of Barrier (closed end at end of Barrier).

Texas A&M Transportation Institute	Roadside Safety and Physical Security Division - Proving Ground		
Project #440861-1 X-bolt F-shape Barrier			2021-04-08
Drawn by GES	Scale 1:40	Sheet 2 of 4 Barrier Details	

Q:\Accreditation-17025-2017\EIR-000 Project Files\440861 - TxDOT FY2021\440861-01 PCB with X-bolt\Drafting, 440861-1\440861-1 Drawing

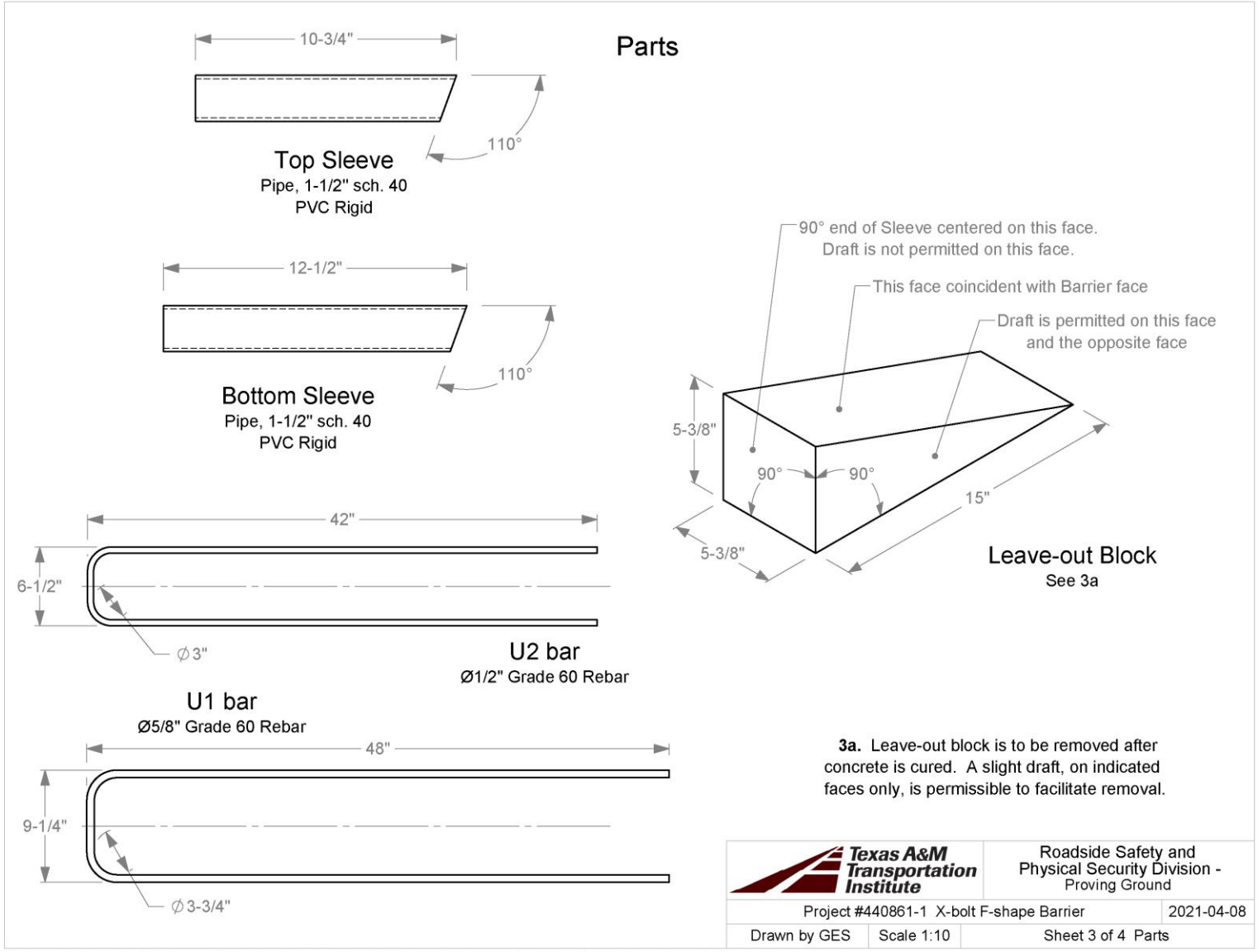
Parts
10-3/4"
110°
Top Sleeve
Pipe, 1-1/2" sch. 40
PVC Rigid
12-1/2"
110°
Bottom Sleeve
Pipe, 1-1/2" sch. 40
PVC Rigid
90° end of Sleeve centered on this face.
Draft is not permitted on this face.
This face coincident with Barrier face
Draft is permitted on this face
and the opposite face
5-3/8"
90°
90°
15"
5-3/8"
Leave-out Block
See 3a
42"
6-1/2"
∅3"
U2 bar
Ø1/2" Grade 60 Rebar
U1 bar
Ø5/8" Grade 60 Rebar
48"
9-1/4"
∅3-3/4"
3a. Leave-out block is to be removed after concrete is cured. A slight draft, on indicated faces only, is permissible to facilitate removal.
Texas A&M Transportation Institute
Roadside Safety and Physical Security Division - Proving Ground
Project #440861-1 X-bolt F-shape Barrier
2021-04-08
Drawn by GES
Scale 1:10
Sheet 3 of 4 Parts
Q:\Accreditation-17025-2017\EIR-000 Project Files\440861 - TxDOT FY2021\440861-01 PCB with X-bolt\Drafting, 440861-1\440861-1 Drawing

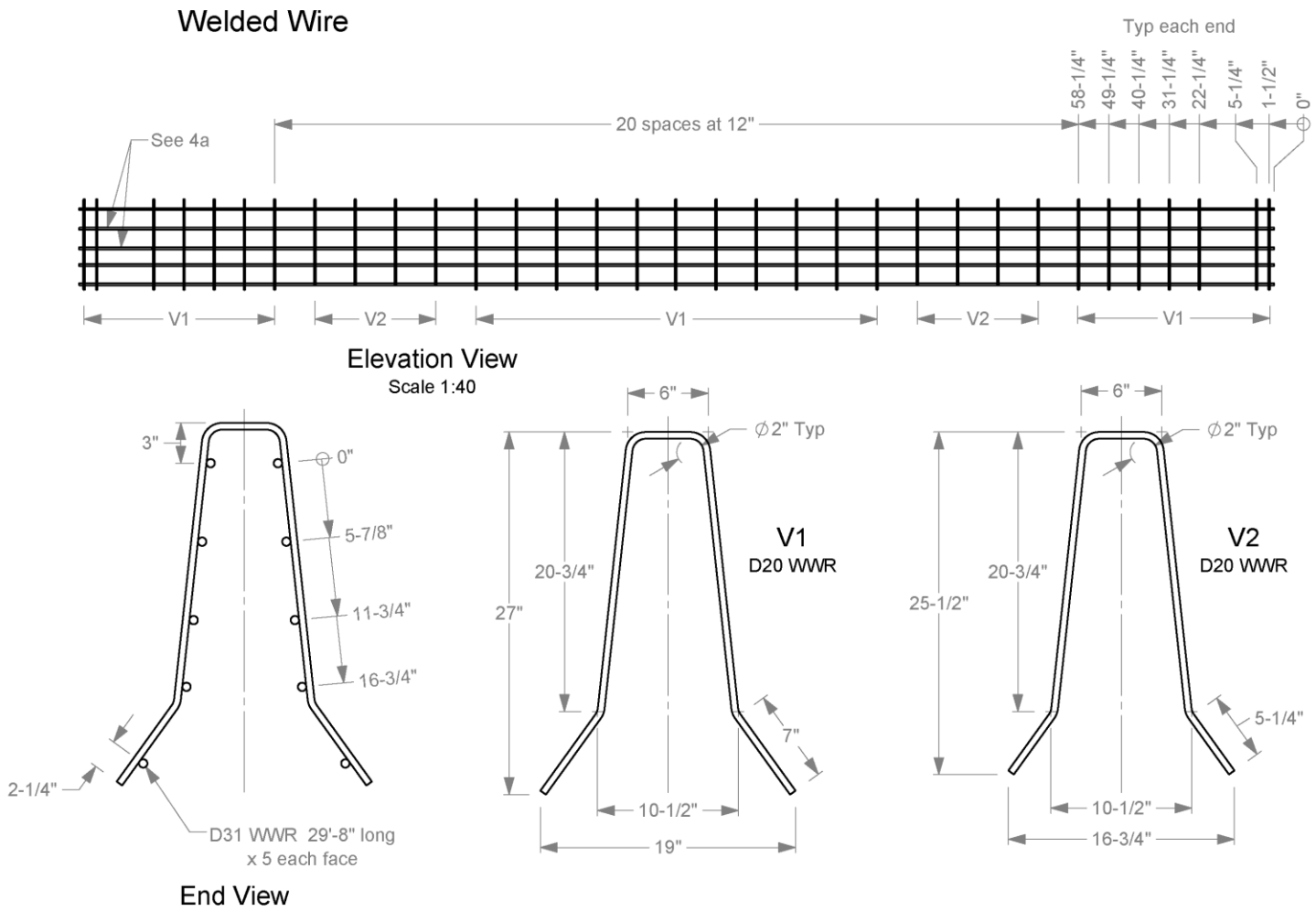

4a. Cut longitudinal bars to avoid interference with hardware recess and sleeves. Typical four places.

Texas A&M Transportation Institute	Roadside Safety and Physical Security Division - Proving Ground	
Project #440861-1 X-bolt F-shape Barrier		2021-04-08
Drawn by GES	Scale 1:10	Sheet 4 of 4 Welded Wire

Q:\Accreditation-17025-2017\EIR-000 Project Files\440861 - TxDOT FY2021\440861-01 PCB with X-bolt\Drafting, 440861-1\440861-1 Drawing

APPENDIX B. SUPPORTING CERTIFICATION DOCUMENTS

CORE SUPPLY, LLC
1212 BAMMEL RD
HOUSTON, TX 77073
281-847-3656

DISPATCH COPY

ORDER
2103-502676 PAGE 1 OF 1

SOLD TO	SHIP TO
SUMMIT PRECAST CONCRETE, LLC 15349 SUMMIT PARK DR., STE 10 MONTGOMERY TX 77356	SUMMIT PRECAST CONCRETE, LLC 9930 INDUSTRIAL DR NAVASOTA TX 77868 MICHAEL 281-844-0046

TRUCK WITH LIFT

ACCOUNT	JOB
SUMMITPREC	0
ORDERED ON	3/19/2021 9:21:42 AM
DELIVER ON	03/19/2021
BRANCH	1000
CUSTOMER PO#	20-289
STATION	C10
CASHIER	EDGAR
SALESPERSON	JAY
ORDER ENTRY	EDGAR
MODIFIED BY	EDGAR

Yard	Quantity	Remaining	U/M	Item	Description	Location	Notes
	32	32	EA	MN502676-000	U1 #5 BAR		
	16	16	EA	MN502676-001	U2 #4 BAR		
	32	32	EA	MN502676-002	V1 #4 BAR		

Stager	Loader	Driver	Truck	Time	BF	SF	Weight	Cubes	Route
				PM	0	0	0.00		

Receiver:

Received in Good Condition

CMC STEEL TEXAS
1 STEEL MILL DRIVE
SEGUIN TX 78155-7510

CERTIFIED MILL TEST REPORT

For additional copies call
830-372-8771

We hereby certify that the test results presented here are accurate and conform to the reported grade specification

Rolando A Davila
Quality Assurance Manager

HEAT NO.:3100467 SECTION: REBAR 16MM (#5) 20'0" 420/60 GRADE: ASTM A615-20 Gr 420/60 ROLL DATE: 10/03/2020 MELT DATE: 10/02/2020 Cert. No.: 83254414 / 100467A371	SOLD TO	Core Supply LLC 1212 Bammel Rd Houston TX US 77073-0000 2818473656 2818474387	SHIP TO	CPU Seguin 1 Steel Mill Dr Seguin TX US 78155-7510 9999999999	Delivery#: 83254414 BOL#: 1999234 CUST PO#: Ps1023-2 CUST P/N: DLVRY LBS / HEAT: 4380.000 LB DLVRY PCS / HEAT: 210 EA

Characteristic	Value	Characteristic	Value	Characteristic	Value
C	0.44%	Bend Test Diameter	2.188IN		
Mn	0.92%				
P	0.013%				
S	0.043%				
Si	0.18%				
Cu	0.31%				
Cr	0.11%				
Ni	0.12%				
Mo	0.038%				
V	0.000%				
Cb	0.001%				
Sn	0.009%				
Al	0.001%				
Yield Strength test 1	67.1ksi				
Tensile Strength test 1	106.8ksi				
Elongation test 1	15%				
Elongation Gage Lgth test 1	8IN				
Tensile to Yield ratio test1	1.59				
Bend Test 1	Passed				

The Following is true of the material represented by this MTR:

**Material is fully killed*
**100% melted and rolled in the USA*
**EN10204:2004 3.1 compliant*
**Contains no weld repair*
**Contains no Mercury contamination*
**Manufactured in accordance with the latest version of the plant quality manual*
**Meets the "Buy America" requirements of 23 CFR635.410, 49 CFR 661*
**Warning: This product can expose you to chemicals which are known to the State of California to cause cancer, birth defects or other reproductive harm. For more information go to www.P65Warnings.ca.gov*

REMARKS :

CMC STEEL TEXAS
1 STEEL MILL DRIVE
SEGUIN TX 78155-7510

CERTIFIED MILL TEST REPORT

For additional copies call
830-372-8771

We hereby certify that the test results presented here are accurate and conform to the reported grade specification

Rolando A Davila
Quality Assurance Manager

HEAT NO.:3102247 SECTION: REBAR 13MM (#4) 20'0" 420/60 GRADE: ASTM A615-20 Gr 420/60 ROLL DATE: 12/20/2020 MELT DATE: 12/11/2020 Cert. No.: 83316090 / 102247A130	SOLD TO	Core Supply LLC 1212 Bammel Rd Houston TX US 77073-0000 2818473656 2818474387	SHIP TO	CPU Seguin 1 Steel Mill Dr Seguin TX US 78155-7510 9999999999	Delivery#: 83316090 BOL#: 2024350 CUST PO#: 10995 CUST P/N: DLVRY LBS / HEAT: 48202.000 LB DLVRY PCS / HEAT: 3608 EA

Characteristic	Value	Characteristic	Value	Characteristic	Value
C	0.45%	Bend Test Diameter	1.750IN		
Mn	0.79%				
P	0.027%				
S	0.047%				
Si	0.20%				
Cu	0.29%				
Cr	0.14%				
Ni	0.12%				
Mo	0.048%				
V	0.000%				
Cb	0.000%				
Sn	0.010%				
Al	0.000%				
Yield Strength test 1	63.0ksi				
Tensile Strength test 1	102.4ksi				
Elongation test 1	15%				
Elongation Gage Lgth test 1	8IN				
Tensile to Yield ratio test1	1.63				
Bend Test 1	Passed				

The Following is true of the material represented by this MTR:

**Material is fully killed*
**100% melted and rolled in the USA*
**EN10204:2004 3.1 compliant*
**Contains no weld repair*
**Contains no Mercury contamination*
**Manufactured in accordance with the latest version of the plant quality manual*
**Meets the "Buy America" requirements of 23 CFR635.410, 49 CFR 661*
**Warning: This product can expose you to chemicals which are known to the State of California to cause cancer, birth defects or other reproductive harm. For more information go to www.P65Warnings.ca.gov*

REMARKS :

DELIVERY COPY S-6650
Summit Precast Concrete, LLC

National Wire L.L.C.
12262 FM-3083
Conroe, TX 77301

Bill of Lading: A12910
Order Number: S-6650
Order Date: 12/16/2020

Salesperson: Scott Zwahr

Sold To:
Summit Precast Concrete, LLC
15349 Summit Park Dr. Suite 101
Montgomery, TX 77356

Ship To: Summit Precast (Navasota, TX)
9930 Industrial Drive

Navasota, TX 77868
JARED 936-217-9030

Special Shipping Instructions:

Customer PO	Ship Date	Delivery Date	Ship Via
20-235	2/11/2021	2/11/2021	RDX

ORDERED	SHIPPED		ITEM	MARK #	UNIT WEIGHT (LBS)	TOTAL WEIGHT (LBS)	SHIPPED WEIGHT (LBS)
1216	64		VXV D24.8XD20.0 57"(+2 1/8",+2 1/8") X 29'8"(1 1/2",1 1/2")	FSHAPE30'-TY1-PCJJ	364.69	443,463.04	23,340.16
						Total (Lbs): 443,463.04	Total Shipped (Lbs): 23,340.16

Driver Cell# _____
RECEIVED BY:_____ **DATE:**_____

THANK YOU FOR YOUR BUSINESS!
Phone: 9367602040
Fax: 9367604080
www.nationalwirellc.com

Please remit payment to:
12262 FM 3083
Conroe, TX 77301

"Carrier agrees that it will look solely to Broker for the payment of its charges and that it will not contact or pursue Broker's customers or the shipper or consignee for payment of freight, accessorial or other charges owed to Carrier.

"Carrier authorizes Freight Broker to invoice Shipper, receiver, consignor or consignee for freight charges and to receive payment as agent for and on behalf of the Carrier. Payment of the freight charges to Freight Broker shall relieve Shipper, receiver, consignor or consignee of any liability to the Carrier for non-payment of charges."

National Wire L.L.C.

12262 FM 3083, Conroe, TX. 77301

Quality Control Department

Certificate of Analysis and Test

#:3

P.O: 20-235

Order #: S-6650

Customer:

Summit Precast Concrete, LLC
15349 Summit Park Dr. Suite 101
Montgomery, TX 77356

QTY	ITEM DESCRIPTION
64	VXV D24.8XD20.0 57"(+2 1/8",+2 1/8") X 29'8"(1 1/2",1 1/2")

Mechanical Properties

Test Date:	1/5/2021	1/25/2021						
Wire Size	D24.8	D20.0						
Heat Number	619515	619941						
Diameter	0.562	0.505						
Avg. Lbs Force	23,000	18,930						
Avg. Tensile (psi)	92,700	94,500						
Avg. Yield (psi)	90,100	92,200						
Avg.Weld Shear(psi)	49,700	49,700						
Bend Test	PASS	PASS						
Reduction of Area %	N/A	N/A						

The undersigned certifies that the material tested above complies with the ASTM A1064/A1064M-18a.

The wire was melted and manufactured in the United States of America and complies with Buy America Requirements.

FOR Jose L. Torres
Quality Control Manager

2/11/2021
Date

EVRAZ | ROCKY MOUNTAIN STEEL
A DIVISION OF EVRAZ INC. NA

2100 S. Freeway
Pueblo, CO 81004 USA

MATERIAL TEST REPORT

Date Printed: 23-NOV-20

Certificate ID: 21249

Date Shipped: 23-NOV-20
Mts ASTM A-510

Product: ROD 5/8"
FWIP: 77135004

Specification: ASTM-A-510 AISI 1018
Customer: NATIONAL WIRE LLC
12262 FM 3083
CONROE, TX 77301

Cust. PO: 1506

CHEMICAL ANALYSIS (In Weight %, uncertainty of measurement 0.005%) (MELTED AND CAST ON 11/16/20)

Heat Number	C	Mn	P	S	Si	Cu	Ni	Cr	Mo	Al	V	B	Cb	Sn	N	Ca	Ti	Co
619515	0.18	0.65	0.013	0.020	0.18	0.23	0.08	0.20	0.017	0.003	0.000	0.0002	0.000	0.010	0.0081	0.0003	0.001	0.007

MECHANICAL PROPERTIES (ROLLED & TESTED ON 11/18/20)

	Ultimate (Psi)	Ultimate (MPa)	Red/Area (%)	Size (in.)	Size (mm)	Ovality (in.)	Ovality (mm)
Minimum	70630	487.0	53.6	0.623	15.82	0.008	0.20
Maximum	71220	491.0	55.6	0.624	15.85	0.008	0.20
Average	70925	489.0	54.6	0.624	15.85	0.008	0.20
Std. Dev	295	2.0	1.0	0.000	0.00	0.000	0.00
Count	2	2	2	2	2	2	2

All melting and manufacturing processes of the material subject to this test certificate occurred in the United States of America. ERMS also certifies this material to be free from Mercury contamination.

This material has been produced, tested and conforms to the requirements of the applicable specifications. We hereby certify that the above test results represent those contained in the records of the Company.

Methods used: ASTM A370, A510, A615, A706.

Material test report shall not be reproduced except in full, without approval of the company.

Jon Ball
General Supervisor of Quality

EVRAZ | ROCKY MOUNTAIN STEEL
A DIVISION OF EVRAZ INC. NA

2100 S. Freeway
Pueblo, CO 81004 USA

MATERIAL TEST REPORT

Date Printed: 15-DEC-20

Certificate ID: 22147

Date Shipped: 15-DEC-20 | Product: ROD 9/16" | Specification: AISI 1012M

Mts ASTM A-510 | FWIP: 77136025 | Customer: NATIONAL WIRE LLC | Cust. PO: 1506

12262 FM 3083
CONROE, TX 77301

CHEMICAL ANALYSIS (In Weight %, uncertainty of measurement 0.005%) (MELTED AND CAST ON 12/05/20)

Heat Number	C	Mn	P	S	Si	Cu	Ni	Cr	Mo	Al	V	B	Cb	Sn	N	Ti	Co
619941	0.13	0.50	0.007	0.020	0.15	0.16	0.06	0.09	0.016	0.001	0.000	0.0001	0.000	0.007	0.0096	0.001	0.007

MECHANICAL PROPERTIES (ROLLED & TESTED ON 12/08/20)

Heat Number	Sample No.	Yield (Psi)	Ultimate (Psi)	Elongation (%)	Reduction (%)	Bend
619941	01		65350		56.3	
619941	02		66300		58.4	

All melting and manufacturing processes of the material subject to this test certificate occurred in the United States of America. ERMS also certifies this material to be free from Mercury contamination.

This material has been produced, tested and conforms to the requirements of the applicable specifications. We hereby certify that the above test results represent those contained in the records of the Company.

Methods used: ASTM A370, A510, A615, A706.

Material test report shall not be reproduced except in full, without approval of the company.

Jon Ball
General Supervisor of Quality

Concrete Core Test Report

Report Number: A1171057.0183
Service Date: 04/16/21
Report Date: 04/21/21
Task: PO# 440861-01

Terracon
6198 Imperial Loop
College Station, TX 77845-5765
979-846-3767 Reg No: F-3272

Client

Texas Transportation Institute
Attn: Gary Gerke
TTI Business Office
3135 TAMU
College Station, TX 77843-3135

Project

Riverside Campus
Riverside Campus
Bryan, TX

Project Number: A1171057

Material Information

Specified Strength:

Specified Length:
Mix ID:
Nominal Maximum Size Aggregate:

Sample Information

Placement Date:
Date Tested: **Time:**
Sampled By: Cullen Turney
Drill Directions: Vertical
Date Core Obtained: 04/15/21 **Time:** 0000
Date Ends Trimmed: 04/15/21 **Time:** 0000
Moisture Conditioning History: According to ASTM C-42

Laboratory Test Data

Core ID	Location	Cored Length (in)	Trim Length (in)	Capped Length (in)	Diam. (in)	Area (sq in)	Length / Diam. Ratio	Max Load (lbs)	Corr. Factor	Comp. Strength (psi)	Fracture Type	Density (pcf)	Tested By
1	Barrier 3	6.30	4.15	4.65	4.05	12.88	1.15	81700	0.906	5750	3		SLS
2	Barrier 4	6.80	4.40	4.83	4.05	12.88	1.19	90140	0.916	6410	1		SLS

Comments:

Services:
Terracon Rep.: Cullen Turney
Reported To:
Contractor:
Report Distribution:
(1) Texas Transportation Institute, Gary Gerke (1) Texas Transportation Institute, Bill Griffith

Start/Stop: 1100-1500

Reviewed By:
Alexander Dunigan
Project Manager

Test Methods:

The tests were performed in general accordance with applicable ASTM, AASHTO, or DOT test methods. This report is exclusively for the use of the client indicated above and shall not be reproduced except in full without the written consent of our company. Test results transmitted herein are only applicable to the actual samples tested at the location(s) referenced and are not necessarily indicative of the properties of other apparently similar or identical materials.

CR0004, 11-16-12, Rev.5

Page 1 of 1

APPENDIX C. *MASH* TEST 3-11 (CRASH TEST NO. 440861-01-1)

C.1. VEHICLE PROPERTIES AND INFORMATION

Table C.1. Vehicle Properties for Test No. 440861-01-1.

Date: 2021-4-15 Test No.: 440861-01-1 VIN No.: 1C6RR6GT5GS269374

Year: 2016 Make: RAM Model: 1500

Tire Size: 265/70 R 17 Tire Inflation Pressure: 35 psi

Tread Type: Highway Odometer: 128672

Note any damage to the vehicle prior to test: None

● Denotes accelerometer location.

NOTES: None

Engine Type: V-8
Engine CID: 5.7 L

Transmission Type:
☑ Auto or ☐ Manual
☐ FWD ☑ RWD ☐ 4WD

Optional Equipment:
None

Dummy Data:
Type: NONE
Mass: 0 lb
Seat Position:

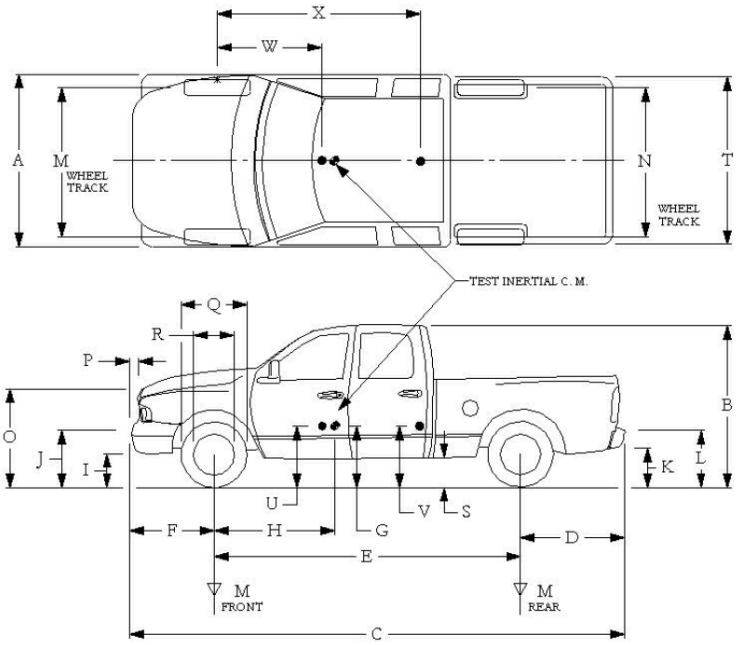

Geometry: inches

A	78.50	F	40.00	K	20.00	P	3.00	U	26.75
B	74.00	G	28.25	L	30.00	Q	30.50	V	30.25
C	227.50	H	59.81	M	68.50	R	18.00	W	59.80
D	44.00	I	11.75	N	68.00	S	13.00	X	79.00
E	140.50	J	27.00	O	46.00	T	77.00		

Wheel Center Height Front	14.75	Wheel Well Clearance (Front)	6.00	Bottom Frame Height - Front	12.50
Wheel Center Height Rear	14.75	Wheel Well Clearance (Rear)	9.25	Bottom Frame Height - Rear	22.50

RANGE LIMIT: A=78 ±2 inches; C=237 ±13 inches; E=148 ±12 inches; F=39 ±3 inches; G = > 28 inches; H = 63 ±4 inches; O=43 ±4 inches; (M+N)/2=67 ±1.5 inches

GVWR Ratings:		**Mass:** lb	Curb	Test Inertial	Gross Static
Front	3700	M_{front}	2971	2889	2889
Back	3900	M_{rear}	2166	2142	2142
Total	6700	M_{Total}	5137	5031	5031

(Allowable Range for TIM and GSM = 5000 lb ±110 lb)

Mass Distribution:
lb LF: 1449 RF: 1440 LR: 1099 RR: 1043

Table C.2. Measurements of Vehicle Vertical Center of Gravity for Test No. 440861-01-1.

Date: 2021-4-15 Test No.: 440861-01-1 VIN: 1C6RR6GT5GS269374

Year: 2016 Make: RAM Model: 1500

Body Style: Quad Cab Mileage: 128672

Engine: 5.7 L V-8 Transmission: Automatic

Fuel Level: Empty Ballast: 40 (440 lb max)

Tire Pressure: Front: 35 psi Rear: 35 psi Size: 265/70 R 17

Measured Vehicle Weights: (lb)								
LF:	1449		RF:	1440		Front Axle:	2889	
LR:	1099		RR:	1043		Rear Axle:	2142	
Left:	2548		Right:	2483		Total:	5031	
							5000 ±110 lb allowed	
Wheel Base:	140.50	inches	Track: F:	68.50	inches	R:	68.00	inches
	148 ±12 inches allowed			Track = (F+R)/2 = 67 ±1.5 inches allowed				
Center of Gravity, SAE J874 Suspension Method								
X:	59.82	inches	Rear of Front Axle		(63 ±4 inches allowed)			
Y:	-0.44	inches	Left -	Right +	of Vehicle Centerline			
Z:	28.25	inches	Above Ground		(minumum 28.0 inches allowed)			

Hood Height: 46.00 inches Front Bumper Height: 27.00 inches
43 ±4 inches allowed

Front Overhang: 40.00 inches Rear Bumper Height: 30.00 inches
39 ±3 inches allowed

Overall Length: 227.50 inches
237 ±13 inches allowed

Table C.3. Exterior Crush Measurements for Test No. 440861-01-1.

Date:	2021-4-15	Test No.:	440861-01-1	VIN No.:	1C6RR6GT5GS269374
Year:	2016	Make:	RAM	Model:	1500

VEHICLE CRUSH MEASUREMENT SHEET[1]

Complete When Applicable	
End Damage	Side Damage
Undeformed end width _____	Bowing: B1 _____ X1 _____
Corner shift: A1 _____	B2 _____ X2 _____
A2 _____	
End shift at frame (CDC)	Bowing constant
(check one)	$\frac{X1+X2}{2}$ = _____
< 4 inches _____	
≥ 4 inches _____	

Note: Measure C_1 to C_6 from Driver to Passenger Side in Front or Rear Impacts – Rear to Front in Side Impacts.

Specific Impact Number	Plane* of C-Measurements	Direct Damage		Field L**	C_1	C_2	C_3	C_4	C_5	C_6	±D
		Width** (CDC)	Max**** Crush								
1	Front plane at bmp ht	12	10	36	-	-	-	-	-	-	-18
2	Side plane above bmp	12	11	60	-	-	-	-	-	-	70
	Measurements recorded										
	☑ **inches or** ☐ **mm**										

[1]Table taken from National Accident Sampling System (NASS).

*Identify the plane at which the C-measurements are taken (e.g., at bumper, above bumper, at sill, above sill, at beltline, etc.) or label adjustments (e.g., free space).

Free space value is defined as the distance between the baseline and the original body contour taken at the individual C locations. This may include the following: bumper lead, bumper taper, side protrusion, side taper, etc. Record the value for each C-measurement and maximum crush.

**Measure and document on the vehicle diagram the beginning or end of the direct damage width and field L (e.g., side damage with respect to undamaged axle).

***Measure and document on the vehicle diagram the location of the maximum crush.

Note: Use as many lines/columns as necessary to describe each damage profile.

Table C.4. Occupant Compartment Measurements for Test No. 440861-01-1.

Date:	2021-4-15	Test No.:	440861-01-1	VIN No.:	1C6RR6GT5GS269374
Year:	2016	Make:	RAM	Model:	1500

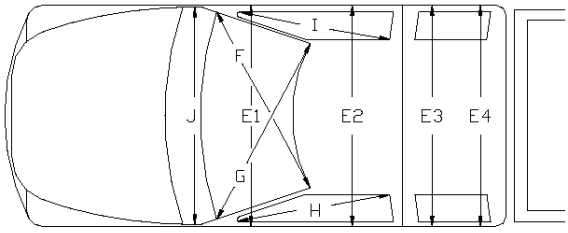

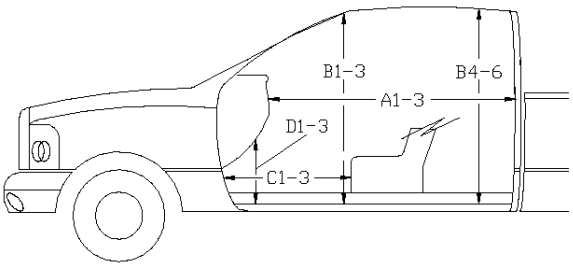

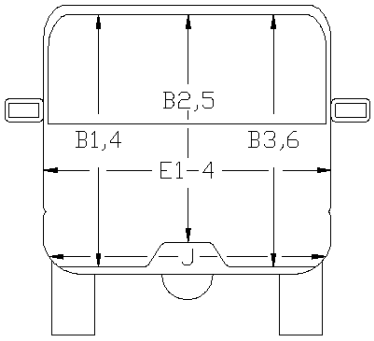

*Lateral area across the cab from driver's side kickpanel to passenger's side kickpanel.

OCCUPANT COMPARTMENT DEFORMATION MEASUREMENT

	Before	After (inches)	Differ.
A1	65.00	65.00	0.00
A2	63.00	63.00	0.00
A3	65.50	65.50	0.00
B1	45.00	45.00	0.00
B2	38.00	38.00	0.00
B3	45.00	45.00	0.00
B4	39.50	39.50	0.00
B5	43.00	43.00	0.00
B6	39.50	39.50	0.00
C1	26.00	25.00	-1.00
C2	0.00	0.00	0.00
C3	26.00	26.00	0.00
D1	11.00	11.00	0.00
D2	0.00	0.00	0.00
D3	11.50	11.50	0.00
E1	58.50	58.50	0.00
E2	63.50	63.50	0.00
E3	63.50	63.50	0.00
E4	63.50	63.50	0.00
F	59.00	59.00	0.00
G	59.00	59.00	0.00
H	37.50	37.50	0.00
I	37.50	37.50	0.00
J*	25.00	25.00	0.00

C.2. SEQUENTIAL PHOTOGRAPHS

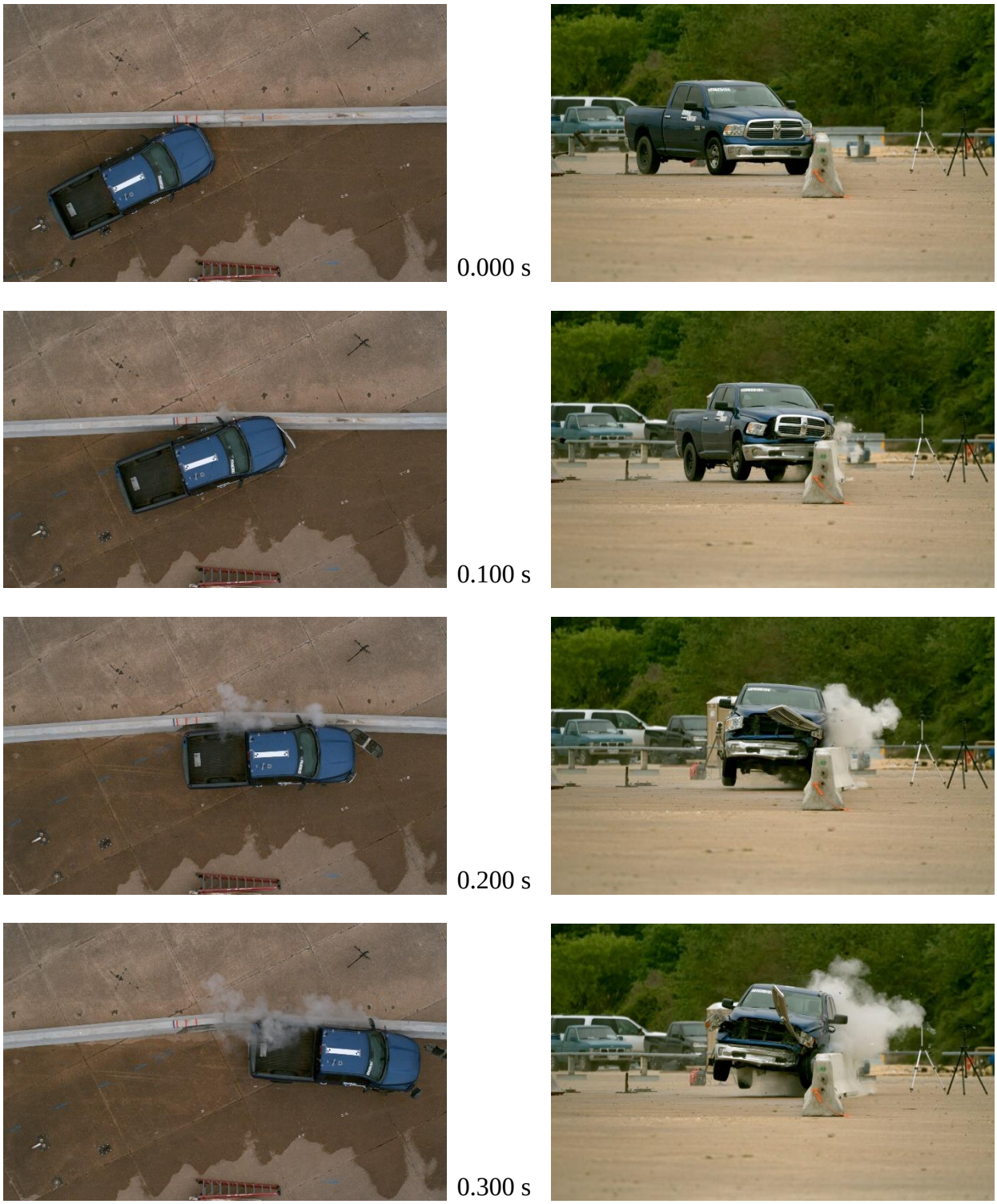

Figure C.1. Sequential Photographs for Test No. 440861-01-1 (Overhead and Frontal Views).


0.400 s


0.500 s

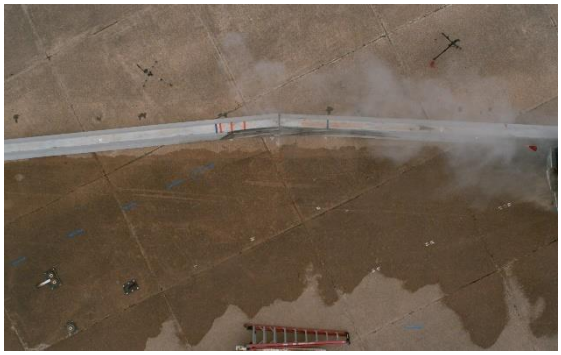


0.600 s


0.700 s

Figure C.1. Sequential Photographs for Test No. 440861-01-1 (Overhead and Frontal Views) (Continued).

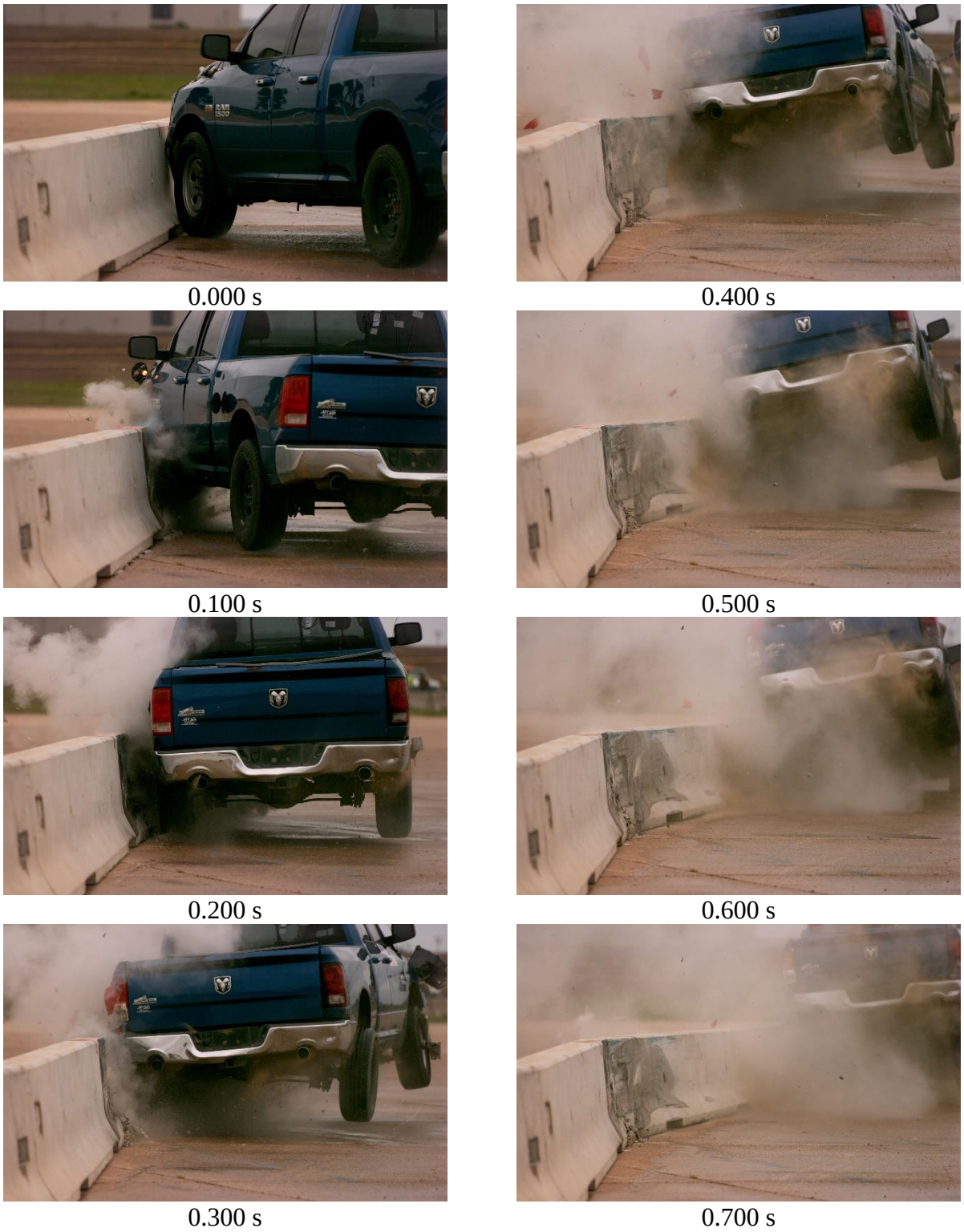

Figure C.2. Sequential Photographs for Test No. 440861-01-1 (Rear View).

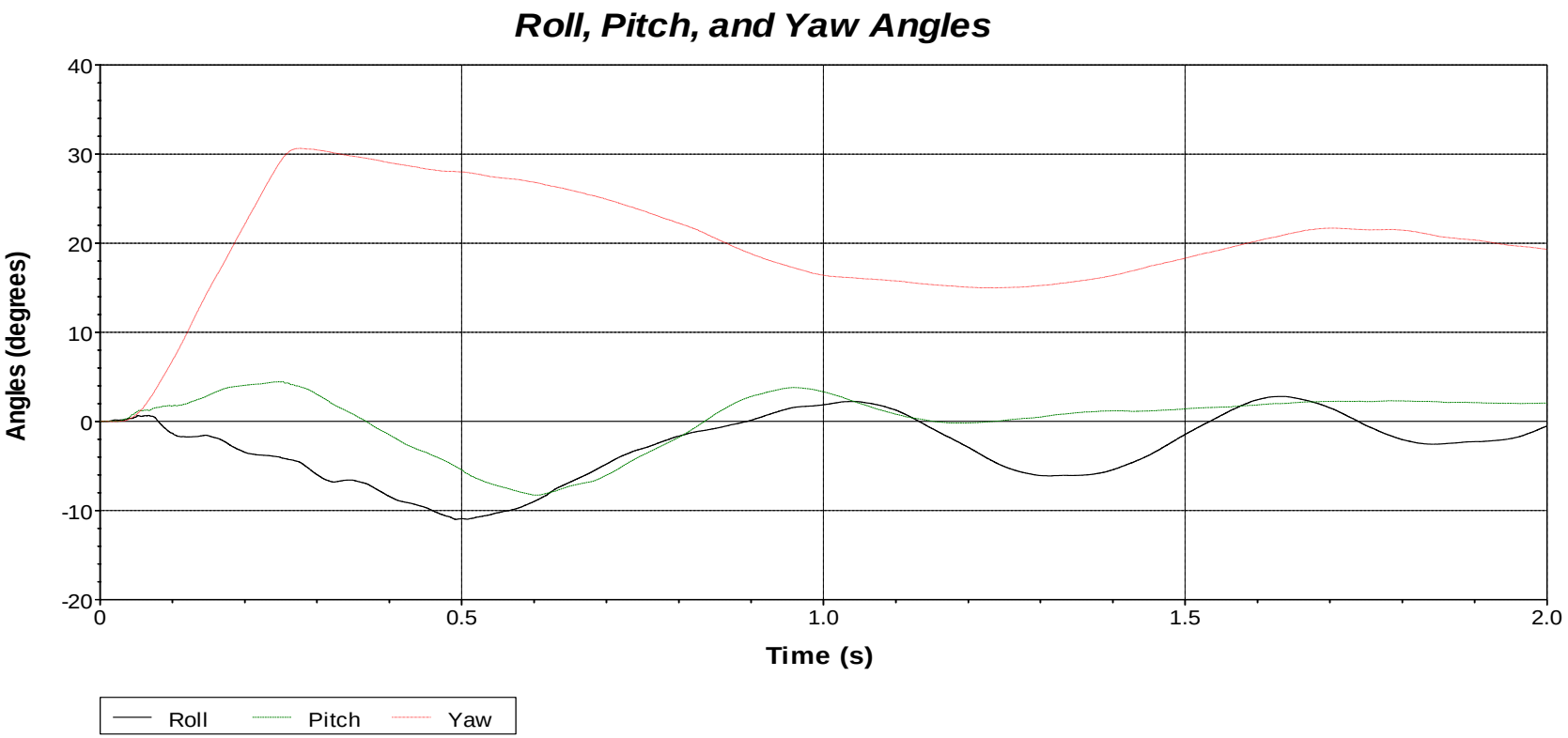

Axes are vehicle-fixed.
Sequence for determining orientation:

1. Yaw.
2. Pitch.
3. Roll.

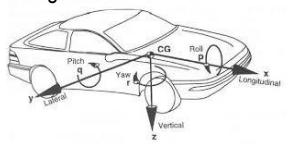

Test Number: 440861-01-1
Test Standard Test Number: *MASH* Test 3-11
Test Article: F-Shape PCB with X-Bolt Connection
Test Vehicle: 2016 RAM 1500 Pickup
Inertial Mass: 5031 lb
Gross Mass: 5031 lb
Impact Speed: 62.4 mi/h
Impact Angle: 24.8°

Figure C.3. Vehicle Angular Displacements for Test No. 440861-01-1.

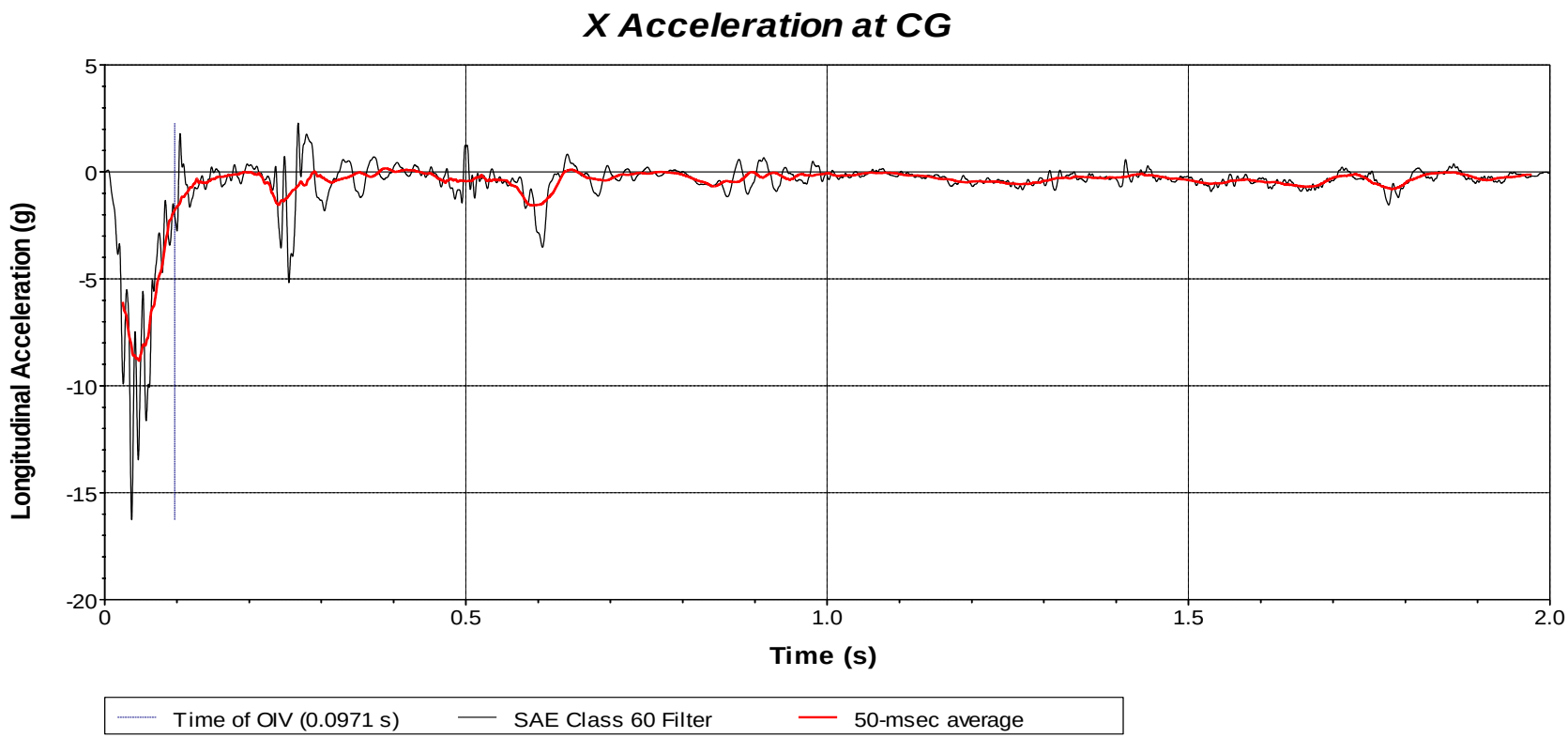

Test Number: 440861-01-1
Test Standard Test Number: *MASH* Test 3-11
Test Article: F-Shape PCB with X-Bolt Connection
Test Vehicle: 2016 RAM 1500 Pickup
Inertial Mass: 5031 lb
Gross Mass: 5031 lb
Impact Speed: 62.4 mi/h
Impact Angle: 24.8°

Figure C.4. Vehicle Longitudinal Accelerometer Trace for Test No. 440861-01-1 (Accelerometer Located at Center of Gravity).

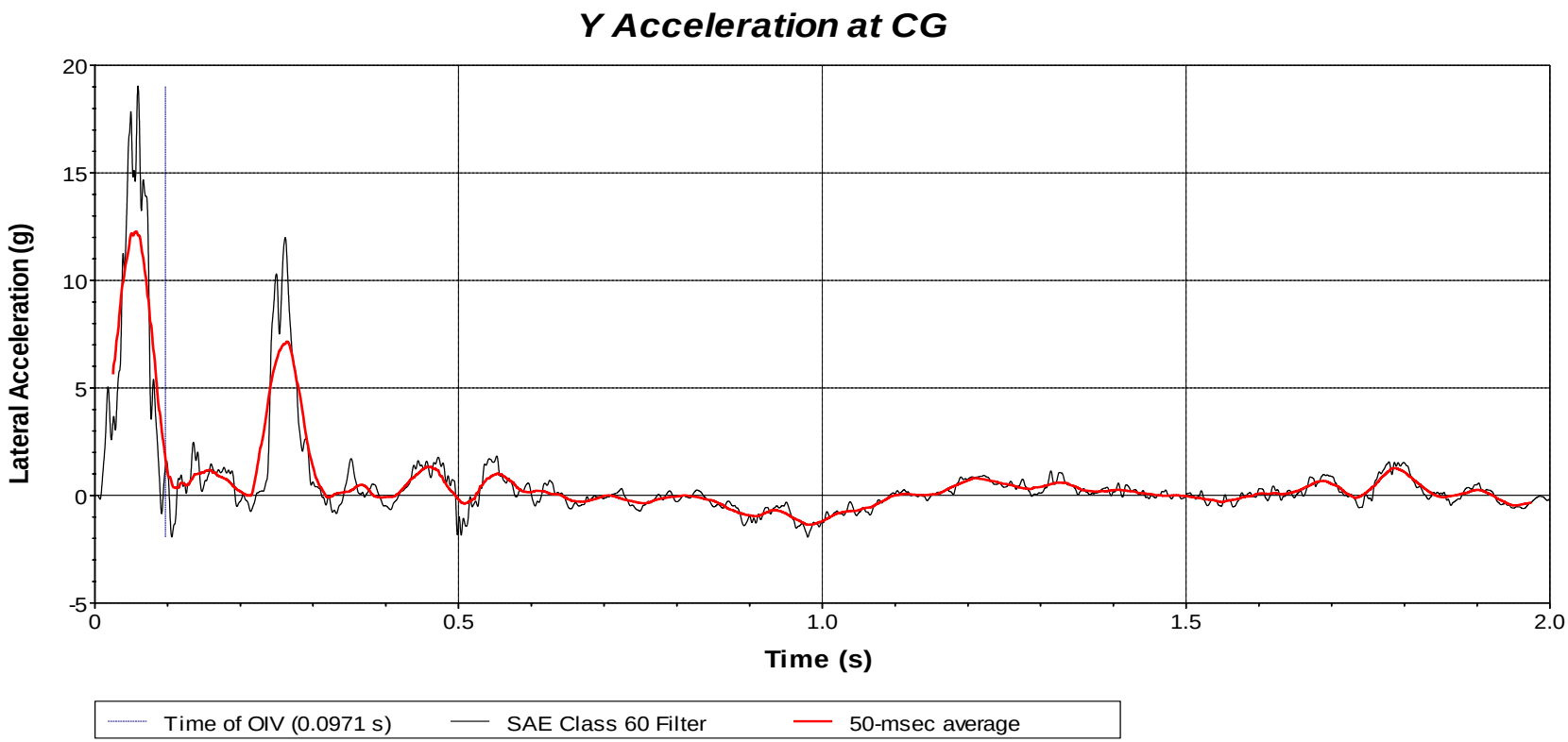

Test Number: 440861-01-1
Test Standard Test Number: *MASH* Test 3-11
Test Article: F-Shape PCB with X-Bolt Connection
Test Vehicle: 2016 RAM 1500 Pickup
Inertial Mass: 5031 lb
Gross Mass: 5031 lb
Impact Speed: 62.4 mi/h
Impact Angle: 24.8°

Figure C.5. Vehicle Lateral Accelerometer Trace for Test No. 440861-01-1 (Accelerometer Located at Center of Gravity).

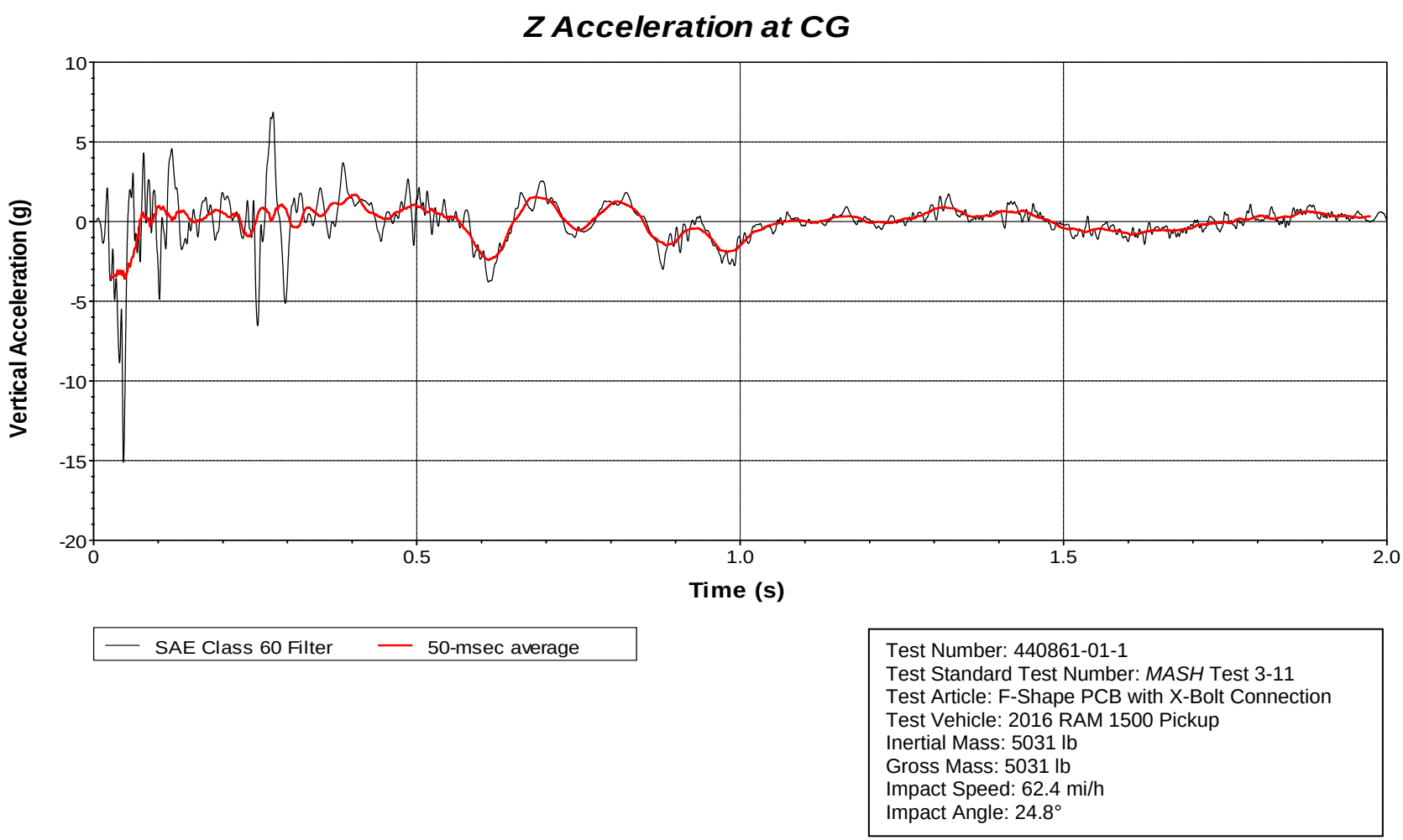

Figure C.6. Vehicle Vertical Accelerometer Trace for Test No. 440861-01-1 (Accelerometer Located at Center of Gravity).