FTA RESEARCH

FEDERAL TRANSIT ADMINISTRATION

FTA Standards Development Program: Crashworthiness/Crash Energy Management for Transit Bus

ORIGINAL: JANUARY 2018
REVISED: DECEMBER 2020

FTA Report No. 0179
Federal Transit Administration

PREPARED BY

Center for Urban Transportation Research
University of South Florida

U.S. Department of Transportation
Federal Transit Administration

COVER PHOTO

Courtesy of iStock

DISCLAIMER

This document is disseminated under the sponsorship of the U.S. Department of Transportation in the interest of information exchange. The United States Government assumes no liability for its contents or use thereof. The United States Government does not endorse products or manufacturers. Trade or manufacturers' names appear herein solely because they are considered essential to the objective of this report.

FTA Standards Development Program: Crashworthiness/ Crash Energy Management for Transit Bus

ORIGINAL: JANUARY 2018
REVISED: DECEMBER 2020

FTA Report No. 0179

PREPARED BY

Jodi Godfrey and Lisa Staes
Center for Urban Transportation Research
University of South Florida
4202 E. Fowler Avenue, CUT100
Tampa, FL 33620

SPONSORED BY

Federal Transit Administration
Office of Research, Demonstration and Innovation
U.S. Department of Transportation
1200 New Jersey Avenue, SE
Washington, DC 20590

AVAILABLE ONLINE

https://www.transit.dot.gov/about/research-innovation

Metric Conversion Table

SYMBOL	WHEN YOU KNOW	MULTIPLY BY	TO FIND	SYMBOL
		LENGTH		
in	inches	25.4	millimeters	mm
ft	feet	0.305	meters	m
yd	yards	0.914	meters	m
mi	miles	1.61	kilometers	km
		VOLUME		
fl oz	fluid ounces	29.57	milliliters	mL
gal	gallons	3.785	liter	L
ft^3	cubic feet	0.028	cubic meters	m^3
yd^3	cubic yards	0.765	cubic meters	m^3
NOTE: volumes greater than 1000 L shall be shown in m^3				
		MASS		
oz	ounces	28.35	grams	g
lb	pounds	0.454	kilograms	kg
T	short tons (2000 lb)	0.907	megagrams (or "metric ton")	Mg (or "t")
		TEMPERATURE (exact degrees)		
°F	Fahrenheit	5 (F-32)/9 or (F-32)/1.8	Celsius	°C

REPORT DOCUMENTATION PAGE

Form Approved
OMB No. 0704-0188

The public reporting burden for this collection of information is estimated to average 1 hour per response, including the time for reviewing instructions, searching existing data sources, gathering and maintaining the data needed, and completing and reviewing the collection of information. Send comments regarding this burden estimate or any other aspect of this collection of information, including suggestions for reducing the burden, to Department of Defense, Washington Headquarters Services, Directorate for Information Operations and Reports (0704-0188), 1215 Jefferson Davis Highway, Suite 1204, Arlington, VA 22202-4302. Respondents should be aware that notwithstanding any other provision of law, no person shall be subject to any penalty for failing to comply with a collection of information if it does not display a currently valid OMB control number.
PLEASE DO NOT RETURN YOUR FORM TO THE ABOVE ADDRESS.

1. REPORT DATE December 2020	2. REPORT TYPE Revision/Update	3. DATES COVERED January 2017–December 2017
4. TITLE AND SUBTITLE FTA Standards Development Program: Crashworthiness/Crash Energy Management for Transit Bus		5a. CONTRACT NUMBER 5b. GRANT NUMBER 5c. PROGRAM ELEMENT NUMBER
6. AUTHOR(S) Lisa Staes and Jodi Godfrey		5d. PROGRAM NUMBER 5e. TASK NUMBER 5f. WORK UNIT NUMBER
7. PERFORMING ORGANIZATION NAME(S) AND ADDRESSE(ES) Center for Urban Transportation Research University of South Florida 4202 E. Fowler Avenue, CUT 100 Tampa, FL 33620		8. PERFORMING ORGANIZATION REPORT NUMBER FTA Report No. 0179
9. SPONSORING/MONITORING AGENCY NAME(S) AND ADDRESS(ES) U.S. Department of Transportation Federal Transit Administration Office of Research, Demonstration and Innovation 1200 New Jersey Avenue, SE, Washington, DC 20590		10. SPONSOR/MONITOR'S ACRONYM(S) FTA 11. SPONSOR/MONITOR'S REPORT NUMBER(S)

12 . DISTRIBUTION/AVAILABILITY STATEMENT
Available from: National Technical Information Service (NTIS), Springfield, VA 22161; (703) 605-6000, Fax (703) 605-6900, email [orders@ntis.gov]; Distribution Code TRI-30

13. SUPPLEMENTARY NOTES NOTES [www.transit.dot.gov/about/research-innovation] [https://www.transit.dot.gov/about/research-innovation] [https://doi.org/10.21949/1818351] Suggested citation: Federal Transit Administration. FTA Standards Development Program: Crashworthiness/ Crash Energy Management for Transit Bus. Washington, D.C.: United States Department of Transportation, 2020. https://doi.org/10.21949/1818351

14. ABSTRACT

This research includes an examination of the standards, guidelines, and recommendations associated with crashworthiness and Crash Energy Management (CEM) for transit buses, including articulated buses, BRT buses, and paratransit body-on-chassis buses. Included in this review are standards that exist in the U.S., including Federal Motor Vehicle Safety Standards (FMVSS) and state standards and those developed and adopted by entities outside the U.S., including the United Nations Economic Commission for Europe (UNECE) and Australia. This examination also includes standards issued by Standards Development Organizations (SDOs). Where data were available, it also presents recommendations from previous studies and reports that establish the efficacy of any established standards.

15. SUBJECT TERMS Bus CEM, crash energy management, crashworthiness, transit vehicle CEM, or crashworthiness

16. SECURITY CLASSIFICATION OF:			17. LIMITATION OF ABSTRACT	18. NUMBER OF PAGES	19a. NAME OF RESPONSIBLE PERSON
a. REPORT Unclassified	b. ABSTRACT Unclassified	c. THIS PAGE Unclassified		70	19b. TELEPHONE NUMBER

Standard Form 298 (Rev. 8/98)
Prescribed by ANSI Std. Z39.18

TABLE OF CONTENTS

1 Executive Summary
5 Section 1: Introduction
6 Section 2: Background
7 Section 3: Existing Bus Crashworthiness Standards
7 Federal Standards
10 State Standards/Administrative Rules
12 United Nations Economic Commission for Europe Regulations
15 Australian Design Rules
16 International Society of Automotive Engineers Standards
17 Florida Safety Testing Standard for Paratransit Buses
19 Other Relevant Standards for Paratransit Buses
20 Section 4: Evaluation of Existing Bus Crashworthiness Standards
20 General Transit Bus (No Indication of Type)
24 Paratransit Body-on-Chassis Buses (Cutaways)
36 Section 5: Data Presentation and Gap Analysis
39 Section 6: Conclusions
39 Transit Bus Crashworthiness/Crash Energy Management Standards
41 Investigation Reports and Supporting Research
41 Data and Gap Analysis Summary
43 Section 7: Findings
44 Appendix A: Florida Standard for Paratransit Buses
54 Appendix B: Current Bus Crashworthiness Standards
59 Appendix C: Bus Crashworthiness Standard Topics by Regulating Entity
60 Acronyms/Abbreviations

LIST OF FIGURES

12	Figure 3-1:	Residual Space as Defined in UNECE R-66
18	Figure 3-2:	Specification of Survival Space
27	Figure 4-1:	Frontal Ring and Rear Wall of Paratransit Bus
27	Figure 4-2:	Deformation of Frontal Ring from Test and Deformation Graphic Produced by FE Model
29	Figure 4-3:	NHTSA MBD for FMVSS 214 Testing vs. IIHS MBD Heights
32	Figure 4-4:	Medium Bus Seating Chart – Areas of Intrusion
32	Figure 4-5:	Motion of Lap-Belted Occupant in Frontal Collision vs. Lap/Shoulder Belted Occupant
33	Figure 4-6:	Damaged Paratransit buses from Davis, OK and Dolan Springs, AZ

LIST OF TABLES

30	Table 4-1:	Comparison of Side Impact Tests

ABSTRACT

This research includes an examination of the standards, guidelines, and recommendations associated with crashworthiness and Crash Energy Management (CEM) for transit buses, including articulated buses, BRT buses, and paratransit body-on-chassis buses. Included in this review are standards that exist in the U.S., including Federal Motor Vehicle Safety Standards (FMVSS) and state standards and those developed and adopted by entities outside the U.S., including the United Nations Economic Commission for Europe (UNECE) and Australia. This examination also includes standards issued by Standards Development Organizations (SDOs). Where data were available, it also presents recommendations from previous studies and reports that establish the efficacy of any established standards.

EXECUTIVE SUMMARY

The Federal Transit Administration (FTA) entered into a Cooperative Agreement with the Center for Urban Transportation Research (CUTR) at the University of South Florida to research areas of transit safety risk, identify associated existing standards and recommended practices, and perform gap analyses to establish the need for additional standards, guidance, or recommended practices to support and further the safe operation of the nation's public transportation industry. Public transit agencies may use the findings of the reports generated through these efforts and any subsequent guidance to leverage agency decision-making.

This research includes an examination of the standards, guidelines, and recommendations associated with crashworthiness and crash energy management (CEM) for transit buses, including articulated buses, bus rapid transit (BRT) buses, and paratransit body-on-chassis buses. Included within this review are standards that exist within the U.S., including Federal Motor Vehicle Safety Standards (FMVSS) and State standards and those developed and adopted by entities outside the U.S., including the United Nations Economic Commission for Europe (UNECE) and Australia. In addition, this examination includes standards issued by Standards Development Organizations (SDOs). Where data were available, it also presents recommendations from previous studies and reports that establish the efficacy of any established standards.

Existing Standards

Bus crashworthiness standards exist at both the Federal and State levels within the U.S. Additionally, countries and organizations outside the U.S., such as Australia and UNECE, mandate the use of bus crashworthiness standards. The International Society of Automotive Engineers (SAE) and other SDOs have also developed crashworthiness standards for buses.

Included in FMVSS (49 C.F.R. Part 571) are 22 standards associated with crashworthiness and the protection of occupant space. Many of these standards have applicability restrictions determined by Gross Vehicle Weight Rating (GVWR). For example, § 571.201, "Occupant protection in interior impact," is applicable to buses with a GVWR of 4,536 kilograms or less (10,000 lb or less), meaning that this standard would not be applicable to general transit buses, which have a GVWR between 20,000 and 33,000 lb.[1] Additionally, several FMVSS are applicable only to the driver's seat. Those applicable to transit buses include:

- § 571.204, "Steering control rearward displacement"
- § 571.205, "Glazing materials"
- § 571.213, "Child restraint systems"
- § 571.217, "Bus emergency exits and window retention and release"
- § 571.302, "Flammability of interior materials"

[1] http://onlinepubs.trb.org/onlinepubs/tcrp/docs/TCRPJ-11Task20-FR.pdf.

Some states have adopted FMVSS for vans or buses manufactured or operated in their state. The State of Minnesota has adopted many FMVSS standards through its Minnesota Administration Rules, Chapter 8840.5940. Wisconsin State Legislature Administrative Code Chapter Trans 330.10[2] contains three relevant equipment requirements and standards, and Trans 330.14 establishes the State requirement to comply with specific FMVSS standards. Florida enacted Rule Chapter 14-90, Florida Administrative Code (F.A.C.), "Equipment and Operational Safety Standards for Bus Transit Systems" that is applicable to every public transit bus operating in the state. Section 14-90.007, F.A.C., "Vehicle Equipment Standards and Procurement Criteria"[3] provides bus vehicle crashworthiness standards.

The American Public Transportation Association's (APTA) *Standard Bus Procurement Guidelines* provides suggested language to incorporate into requests for proposal documents for new vehicle purchase. Section 1.1 of the document provides recommendations related to bus body and roof structure standards.

Outside the U.S., entities such as UNECE have established minimum standards for vehicle crashworthiness or residual space for certain transit vehicles depending on their classification. Australian Design Rules (ADRs) include standards for transit vehicles based on vehicle classifications and address general safety requirements, seating anchorages, seatbelts, rollover strength, and occupant protection.

Data Limitations

One of the most difficult challenges when trying to determine the crashworthiness of transit buses is the lack of available data demonstrating the need for standards for these vehicles. Databases such as the National Highway Traffic Safety Administration's (NHTSA) Fatality Analysis Reporting System (FARS), FTA's National Transit Database (NTD), and the National Automotive Sampling System General Estimates System (NASS GES) are not useful in determining leading indicators in transit bus fatality collision events or those with significant injuries.

National Transportation Safety Board (NTSB) Investigations

Several NTSB recommendations advocate improved crashworthiness of mass transit bus vehicles, including removing weight applicability restrictions for several standards; developing standards for frontal, side, rear, and rollover collisions; requiring manufacturers to comply with newly-developed occupant crash

[2] https://docs.legis.wisconsin.gov/code/admin_code/trans/330.

[3] https://www.flrules.org/gateway/RuleNo.asp?title=EQUIPMENT%20AND%20OPERATIONAL%20SAFETY%20STANDARDS%20FOR%20BUS%20TRANSIT%20SYSTEMS&ID=14-90.007

protection standards; and increasing roof strength standards.[4] NTSB recognizes that medium-size buses, regardless of weight, operate in a manner similar to motorcoaches and, as such, should be held to similarly stringent standards.[5] Several accident investigation reports issued by NTSB (see summaries provided in Section 4, "NTSB Investigations") identify loss of survivable space and intrusions into passenger cabins of over-the-road (OTR) buses as contributing to injuries and fatalities. Many accidents, including a 2009 Dolan Springs, Arizona, accident, involved a cutaway vehicle like those currently used in U.S. paratransit and rural public transportation services. Following a Davis, Oklahoma, semi-tractor truck/medium-size bus collision, NTSB indicated that "medium-size buses, regardless of weight, operate in a manner similar to motorcoaches." NTSB established that motorcoach occupant protection standards could improve the crashworthiness of vehicles used in motorcoach services, including purpose-built motorcoaches and medium-size buses, including cutaway vehicles.

Data and Gap Analysis Summary

The research team examined NTD data to determine if the need for national crashworthiness standards for transit buses is warranted. The evaluation and literature review provided insufficient evidence that crashworthiness standards should be mandatory for purpose-built transit (generally, vehicles used in public transit fixed-route service that are more than 40 ft in length, including articulated and BRT buses). These transit buses often are used in urban environments, where the risk of rollover events and high-speed collisions is minimal.

Although data are limited, FTA has long recognized the importance of bus crashworthiness and CEM for purpose-built buses and supported FTA Report No. 0021, *Crashworthiness Evaluation of Mass Transit Buses*. The report includes operator-related design recommendations such as additional cab padding compounds to bolster knee impact areas to reduce the risk of femur injuries. For transit riders, recommendations include the redesign of seatbacks to provide head and neck support, offset seat rows to protect seated occupants, and removal of rear center (aisle) seats to reduce the danger of collision-displaced seated passengers striking standing occupants. The report and associated recommendations are excellent resources for the transit industry.

Cutaway buses provide design and crashworthiness challenges that are considerably different than those of purpose built-transit buses. Paratransit buses comprise a significant share of the total national transit bus fleet, with transit buses less than 30 ft in length representing more than 34% of the buses purchased using FTA grant funds from 2011 to 2015. In many

[4] *NHTSA's Approach to Motorcoach Safety (2007),* https://www.nhtsa.gov/DOT/NHTSA/Vehicle%20Safety/Articles/.../481217.pdf.

[5] NTSB, "Highway Accident Report—Truck-Tractor Semitrailer Median Crossover Collision with Medium-Size Bus on Interstate 35, Davis, Oklahoma," September 26, 2014, https://www.ntsb.gov/investigations/AccidentReports/Reports/HAR1503.pdf.

instances, paratransit body-on-chassis transit vehicles operate in very different environments than purpose-built transit buses, with many vehicle miles recorded in rural areas or on trips with longer durations and at higher rates of speed. Whereas no NTD data support the need for crashworthiness standards for these vehicles, supplemental information from NTSB investigation reports and other research supports implementation of existing rollover, side-impact, and secondary-impact standards. This research suggests that industry crashworthiness standards for body-on-chassis buses are needed to standardize construction/assembly requirements and improve crashworthiness to satisfy both urban and rural operating environments.

Findings

- **Finding 1:** There are existing crashworthiness/CEM standards that can be used for 40-ft or longer bus new vehicle procurements.
- **Finding 2:** As part of new or rehabilitation procurements, designs can include improved secondary impact designs that reduce injuries and fatalities. Passenger seating devices, attachments and tracking/anchorages, and seatback designs can be optimized to consider secondary impact collisions.
- **Finding 3:** Tailoring body-on-chassis cutaway vehicle procurement criteria to include rollover testing standards may improve crashworthiness for these types of vehicles.

SECTION

1

Introduction

The Federal Transit Administration (FTA) entered into a Cooperative Agreement with the Center for Urban Transportation Research (CUTR) at the University of South Florida to research areas of transit safety risk, identify existing standards and recommended practices to address those areas of risk, and perform a gap analyses to establish the need for additional standards, guidance, or recommended practices to support and further the safe operation of the nation's public transportation industry. At the direction of FTA, CUTR and its research partner, the Transportation Technology Center, Inc. (TTCI), are performing research and background studies on various topics to collect the information necessary for FTA to issue recommendations to the industry on voluntary standards or publish guidance documents or resource reports to assist the industry in mitigating areas of risk. The findings of this report and subsequent guidance can be leveraged to guide public transit agency decision making.

Although great effort is put forth to avoid collisions, they continue to occur. For the public transportation industry, it is imperative that agencies train their employees and continue to invest in proven technologies to make the transportation network safer; however, collisions will continue to occur, and improved crashworthiness of transit vehicles is an important element in the safe operations of these systems. Crashworthiness, obtained through the institution of various crash energy management (CEM) techniques and applications, increases the likelihood of survivability for operators, passengers, and, when applicable, occupants of other vehicles involved in a collision. The research team performed a literature review and background research to identify current crashworthiness standards for public transportation buses, including purpose-built buses (40-ft and above, articulated, and bus rapid transit [BRT]) and body-on-chassis (cutaway) buses, which for the purposes of this study are defined as those that are less than 30 ft in length.[6] Following this initial review and identification of existing transit bus crashworthiness standards, the research team identified gaps that may exist related to vehicle structure and crashworthiness standards in the public transportation industry and the need for new standards that relate to crashworthiness and CEM. The needs assessment and gap analysis include the identification of relevant international standards, U.S. standards, and non-transit-specific standards that could be modified for public transit applicability for public transit agencies to consider for possible adoption within their agency.

[6]A follow-up study, "Crashworthiness of Less than 30-ft Buses," was conducted by CUTR; publication pending.

SECTION

2

Background

Collisions are a major challenge faced by the public transportation bus industry, as they result in high costs associated with property damage or bodily harm and damage the perception of the entire industry. An analysis of the National Transit Database (NTD) major incidents database (those reported on the Safety and Security 40 Form) indicates that 411 fatal transit bus incidents occurred between 2011 and 2015, and 32 involved demand-response vehicles (typically cutaway buses); these 411 crash events resulted in 427 fatal injuries. During that same timeframe, there were more than 21,500 total collision events involving buses, resulting in more than 40,600 non-fatal injuries.

According to FTA Report No. 0021, *Crashworthiness Evaluation of Mass Transit Buses*, the majority of fatal crashes involving buses that occurred between 1999 and 2003 were those in which the initial impact of the collision was at the front of the transit bus. Shorter heavy-duty, low-floor transit buses with two axles accounted for the majority of fatal transit bus involvements, and half occurred on buses with a passenger seating capacity of 36–45 seats; the majority occurred on buses with no passenger restraints available (excluding the operator's seatbelt). On average, 40 bus occupants were fatally injured each year during that time period and 18,400 were hurt. These injury and fatality statistics are sobering, further validating the need for CEM standards for transit buses. One key aspect to consider is that bus crashworthiness is determined not only by the structural integrity of the bus but also by the interior design and safety features that prevent occupants from secondary-impact injuries due to contact with interior objects such as seatbacks and other bus occupants.

Section 3 discusses existing crashworthiness standards for transit buses and includes an examination of the standards, guidelines, and recommendations associated with crashworthiness and CEM for transit buses, including articulated, BRT, and paratransit body-on-chassis buses. Included in the review are standards that exist within the U.S., including Federal Motor Vehicle Safety Standards (FMVSS) and State standards and those developed and adopted by entities outside the U.S., such as the United Nations Economic Commission for Europe (UNECE) and Australia. In addition, the examination includes standards issued by Standards Development Organizations (SDOs). Where data were available, the literature review also presents recommendations from previous studies and reports that establish the efficacy of any established standards.

SECTION

3

Existing Bus Crashworthiness Standards

The Fixing America's Surface Transportation (FAST) Act report and the associated *Compendium of Transit Safety Standards* identified several crashworthiness-related standards by transit mode, including bus and all rail modes, as defined by the National Transit Database (NTD). This literature review focuses on the identified crashworthiness standards related to bus mode only. The research team conducted a separate, concurrent analysis on rail crashworthiness/CEM standards titled "Crash Energy Management for Heavy, Light, and Streetcar Rail Modes" (publication pending).

Bus crashworthiness standards exist at both the Federal and State levels within the U.S. Additionally, countries and organizations outside the U.S., such as Australia and UNECE, mandate the use of bus crashworthiness standards. The International Society of Automotive Engineers (SAE) and other SDOs have also developed crashworthiness standards for buses. Each regulating entity and its corresponding bus crashworthiness standards, regulations, or rules are presented in this section.

Federal Standards

Federal Motor Vehicle Safety Standards

The first set of bus crashworthiness standards from the *Compendium of Transit Safety Standards* identified the 22 FMVSS established in 49 CFR (Code of Federal Regulations) Part 571. Many of these standards have applicability restrictions that are determined by Gross Vehicle Weight Rating (GVWR). For example, § 571.201, "Occupant protection in interior impact" is applicable to buses with a GVWR of 4,536 kg or less (10,000 lb or less), meaning that this standard would not be applicable to general transit buses, which have a GVWR of 20,000–33,000 lb.[7] Additionally, several FMVSS are applicable only to the driver's seat, such as the following:

- 49 CFR § 571.207, "Seating systems" establishes requirements for seats, their attachment assemblies, and their installation to minimize the possibility of failure by forces acting on them during vehicle impact.

[7] http://onlinepubs.trb.org/onlinepubs/tcrp/docs/TCRPJ-11Task20-FR.pdf.

- § 571.208, "Occupant crash protection" specifies performance requirements for the protection of vehicle occupants in crashes with the purpose of reducing the number of deaths of vehicle occupants and the severity of injuries. This standard specifies vehicle crashworthiness requirements in terms of forces and accelerations measured on anthropomorphic test devices (crash dummies) during crash tests and by specifying equipment requirements for active and passive restraint systems.
- § 571.209, "Seatbelt assemblies" specifies requirements for seatbelt assemblies.
- § 571.210, "Seatbelt assembly anchorages" establishes requirements for seatbelt assembly anchorages to ensure their proper location for effective occupant restraint and to reduce the likelihood of their failure.

The following FMVSS crashworthiness-related standards apply to general transit buses:

- § 571.204, "Steering control rearward displacement" specifies requirements limiting the rearward displacement of the steering control into the operator compartment to reduce the likelihood of chest, neck, or head injury to the bus operator.
- § 571.205, "Glazing materials" specifies requirements for glazing materials with the stated purposes of reducing injuries resulting from impacts with glazing surfaces, ensuring a necessary degree of transparency in motor vehicle windows for driver visibility and minimizing the possibility of occupants being thrown through the vehicle windows in collisions.
- § 571.213, "Child restraint systems" specifies requirements for child restraint systems used in motor vehicles with a built-in child restraint system.
- § 571.217, "Bus emergency exits and window retention and release" establishes requirements for the retention of bus windows (other than windshields) and delineates operating forces, opening dimensions, and markings for bus emergency exits. This standard was established to minimize the likelihood of occupants being thrown from the bus and provide a means of readily-accessible emergency egress.
- § 571.302, "Flammability of interior materials" specifies burn-resistance requirements for materials used in the occupant compartments of motor vehicles with the purpose of reducing deaths and injuries to motor vehicle occupants caused by vehicle fires, especially those originating in the interior of the vehicle from sources.

Other crashworthiness standards in the FMVSS safety series are present; however, due to previously-noted weight applicability restrictions, those standards are not required for transit buses.

FTA Bus Testing Regulations

49 CFR Part 665 requires each applicant for Federal financial assistance under the Federal Transit Act (49 USC Chapter 53) for the purchase or lease of transit buses to certify that any new bus model has been tested in accordance with Bus Testing Procedures contained in § 665, Part B. It includes a delineation of the types of vehicles and testing requirements and the process to develop and issue the test report and corresponding manufacturer certification. At a minimum, FTA bus testing must evaluate:

- Maintainability
- Reliability
- Safety
- Performance (including braking performance)
- Structural integrity
- Fuel economy
- Noise
- Emissions

FTA established its bus testing facility at Pennsylvania State University's Larson Transportation Institute Bus Research and Testing Center in Altoona. In the area of safety, tests include Handling & Stability and Braking Performance; the Handling & Stability Test ensures that an operator can maneuver a bus through a double lane change at a speed of 45 mph, and the Braking Performance Test subjects a bus to a series of brake stops from specified speeds and evaluates parking brake performance on a 20% grade for a five-minute period.[8]

In the area of structural integrity, Altoona performs six testing procedures in its sequence:

- **Distortion** – Observes operation of various subsystems when a bus is placed in a longitudinal twist (simulating operation over a 6-in. curb or through a 6-in. pothole) and subjected to a water spray mechanism simulating rain and traffic spray.
- **Static Tow** – Determines strength characteristics of bus towing fixtures during static loading conditions.
- **Dynamic Tow** – Verifies integrity of towing fixtures and determines feasibility of towing a bus using a heavy-duty wrecker and specified procedures.
- **Jacking:** – Determines damage caused by a deflated tire and feasibility of jacking a bus with a portable hydraulic jack to a height sufficient to replace a deflated tire.
- **Hoisting** – Determines possible damage or deformation caused by jack stands on jacking pads.

[8] https://www.gpo.gov/fdsys/pkg/FR-2016-08-01/pdf/2016-17889.pdf.

- **Durability** – Performs an accelerated durability test that approximates up to 25% of the service life of a vehicle.[9]

Altoona tests do not include full-scale or modeled crash testing or tests to confirm the crashworthiness of vehicles or components.

State Standards/Administrative Rules

Some states have adopted FMVSS for vans or buses manufactured or operated in their state. The State of Minnesota has adopted many FMVSS standards through its Minnesota Administration Rules, Chapter 8840.5940, including:

- "Vehicle construction standards" (FMVSS 49 CFR § 571.216 and § 571.220)
- "Roof crush resistance" (FMVSS Title 49 CFR § 571.216), which establishes strength requirements for the passenger compartment roof with the purpose of reducing deaths and injuries due to the crushing of the roof into occupant compartment in rollover crashes.
- For transit vehicles with remanufactured roofs, Minnesota requires compliance with "School bus rollover protection" (FMVSS 49 CFR § 571.220[10]), which establishes performance requirements for school bus rollover protection with the purpose of reducing deaths and severity of injuries that result from failure of the school bus body structure to withstand forces encountered in rollover crashes.

Other Minnesota Administrative Rules in Chapter 8840.5940, "Vehicle construction standards" do not have crashworthiness application.

Another entry in the *Compendium of Safety Standards* references Transit Cooperative Research Program (TCRP) *Synthesis 18: Bus Occupant Safety,* which provides current transit agency practices used to reduce injuries to passengers while boarding, riding, and leaving a bus. The report establishes that vehicle design is one consideration in the overall safety of the transit system. The report does not make any specific recommendations related to crashworthiness of bus vehicle designs; however, the authors identified Wisconsin State Legislature Administrative Code Chapter Trans 330.10[11] as providing various safety crashworthiness regulations; it contains three equipment requirements and standards related to crashworthiness in addition to Trans 330.14, calling out all applicable FMVSS in 49 CFR 571 additional Wisconsin equipment requirements, which include:

[9] https://www.altoonabustest.psu.edu/bus-tests/structural.aspx.
[10] https://www.revisor.mn.gov/rules?id=8840.5940&keyword_type=all&keyword=bus.
[11] https://docs.legis.wisconsin.gov/code/admin_code/trans/330.

- Trans 330.10(12) – Requires vehicle frames to meet the structural integrity requirements of 49 CFR § 393.20. This includes that frames not be cracked, loose, sagging, or broken and be secured with bolts that are not loose, broken, or missing; that flanges not be bent, cut, or notched; and that accessories not be welded to the frame or chassis and no holes drilled in the rail flanges. Additionally, this standard indicates that frames may be modified only as specified to conform to the applicable FMVSS.
- Trans 330.10(20) – Requires that all seats and seat cushions be securely fastened to prevent them from disengaging from the seat frames in the event of an accident.
- Trans 330.10(30) – Dictates that all windows and windshields conform to applicable FMVSS.

TCRP Synthesis 18 also identified Florida's transit vehicle standards. Florida enacted Rule Chapter 14-90, F.A.C., which provides equipment and operational safety standards for bus transit systems applicable to every public transit bus transit system that operates in the state. Section 14-90.007, F.A.C., Vehicle Equipment Standards and Procurement Criteria[12] specifically indicates bus vehicle crashworthiness standards:

- § 14-90.007(1)(b) – Requires that the structural integrity of all buses mitigates or minimizes the adverse effects of collisions.
- § 14-90.007(1)(c) – Requires compliance with FMVSS 49 CFR Part 571, sections 102, 103, 104, 105, 108, 207, 209, 210, 217, 302, 403, and 404. Of these, sections 207, 209, 210, 217, and 302 are at least partially-related to vehicle crashworthiness.
- § 14-90.007(8) – Requires all buses to have an emergency exit door or emergency escape push-out windows. Each emergency escape window must be in the form of a parallelogram with dimensions of not less than 18" × 24," and each must contain an area of not less than 432 in2. This requirement allows bus occupants to escape in the event of an emergency. The emergency exit section also establishes the required proportional share of escape area to seat ratio of 67 in. per seat, including the driver's seat, and requires that the positioning of the emergency exits is no more than 40% on one side of the bus.
- § 14-90.007(12) – Mandates that every bus be equipped with an adjustable driver's restraining belt be in compliance with 49 CFR 571.209 and 49 CFR 571.210.

[12]https://www.flrules.org/gateway/RuleNo.asp?title=EQUIPMENT%20AND%20OPERATIONAL%20SAFETY%20STANDARDS%20FOR%20BUS%20TRANSIT%20SYSTEMS&ID=14-90.007.

United Nations Economic Commission for Europe (UNECE) Regulations

In addition to current U.S. Federal and State crashworthiness safety standards, UNECE has regulations. Similar to the FMVSS safety standards, applicability of UNECE regulations is dependent on vehicle classification. Category M is defined as "power-driven vehicles having at least four wheels and used for the carriage of passengers"[13] and is further classified into three categories:

- Category M_1 includes vehicles defined in category M that have no more than eight seats in addition to the operator's seat.
- Category M_2 includes vehicles defined in category M with more than eight passenger seats and a maximum mass not exceeding 5,000 kg (11,023 lb).
- Category M_3 includes vehicles defined in category M with more than eight passenger seats and a mass exceeding 5,000 kg (11,023 lb).

Many transit bus vehicles fit into the M_3 category, and paratransit vehicles, including body-on-chassis or cutaway vehicles, are included in the M2 category. UNECE defines residual space as "a space to be preserved in the passenger, crew, and driver compartment(s) to provide better survival possibility for passengers, driver, and crew in the case of a rollover accident" (Figure 3-1).[14]

Figure 3-1

Residual Space as Defined in UNECE R-66

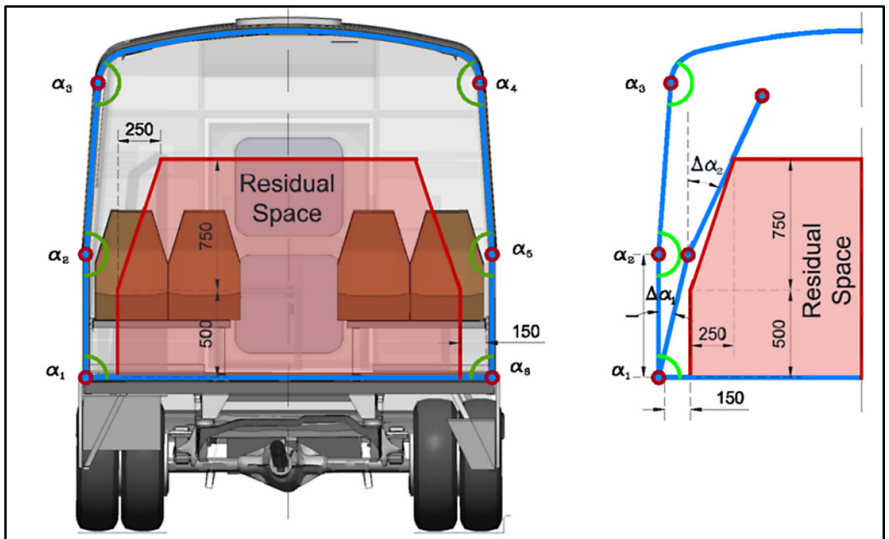

Source: UN ECE (2006)

[13]Economic and Social Council, "Consolidated Resolution on the Construction of Vehicles (R.E.3)," http://www.unece.org/fileadmin/DAM/trans/main/wp29/wp29resolutions/ECE-TRANS-WP29-78-r4e.pdf.

[14]UNECE, Regulation No. 66, "Uniform Technical Prescriptions Concerning the Approval of Large Passenger Vehicles with Regard to the Strength of Their Superstructure," Section 2, 2009.

UNECE established the following uniform standards provisions:

- UNECE R-14 – Uniform provisions concerning the approval of vehicles with safety-belt anchorages, ISOFIX anchorages systems, and ISOFIX top tether anchorages requiring minimum strength and the minimum number of anchorage points for safety belt anchorages, ISOFIX anchorage systems and ISOFIX top tether anchorages. ISOFIX is a system with two rigid anchorages for the connection of child restraint systems to vehicles.[15]
- UNECE R-16 – Uniform provisions concerning the approval of safety-belts, restraint systems, child restraint systems, and ISOFIX child restraint systems for occupants of power-driven vehicles; requires that forward-facing seating positions have a safety belt available.
- UNECE R-17 – Uniform provisions concerning the approval of vehicles seats, their anchorages, and any head restraints; establishes general specifications applicable to seats of M3 vehicles not covered in UNECE R-80 and prohibits side-facing seats.
- UNECE R-25 – Uniform provisions concerning the approval of head restraints (headrests), if incorporated in vehicle seats; requires that the presence of the head restraint not be an additional cause of danger to occupants of the vehicle. This regulation also requires that the head restraint not exhibit any dangerous roughness or sharp edge liable to increase the risk or seriousness of injury to vehicle occupants. Additionally, the head restraint must be capable of dissipating energy in the event of an impact.
- UNECE R-34 – Uniform provisions concerning prevention of fire risks; requires that fuel tanks are corrosion-resistant, equipped with properly-designed safety valves or vents, partitioned from passenger compartments, securely fixed to ensure leaking will escape to the ground and not into the occupant compartment, and must pass a hydraulic test and an overturn test without permanent deformation.
- UNECE R-36 – Uniform provisions concerning the approval of general construction of large passenger vehicles; establishes load distribution requirements, minimum area available for passengers, and maximum passenger capacity. This regulation requires protection against fire risks from the engine compartment, fuel filler-holes, fuel tanks, fuel-feed systems, emergency switch, electrical equipment and wiring, batteries, and materials, with additional requirements for available space for fire extinguishers and first-aid equipment; it also requires a minimum number of exits, with configuration and dimensions considered.
- UNECE R-43 – Uniform provisions concerning approved safety glazing materials and installation on vehicles; requires that all glazing materials be such that, in the event of shattering, the danger of bodily injury is reduced as much as possible. The glazing material must be sufficiently resistant

[15] https://globalautoregs.com/rules/25-safety-belt-and-isofix-anchorages.

to incidents likely to occur in normal traffic and to atmospheric and temperature conditions, chemical action, combustion, and abrasion. Safety glazing must be sufficiently transparent, not cause distortion of objects seen through the window, and not cause confusion between traffic signal colors. Additionally, in the event of windshield shattering, the operator must be able to see the road clearly enough to brake and stop the vehicle.

- UNECE R-66 – Uniform technical prescriptions concerning approval of large passenger vehicles with regard to the strength of their superstructure; requires that the superstructure of the vehicle have the sufficient strength to ensure that residual space during and after the rollover test on a complete vehicle is unharmed. Unharmed residual space means no part of the vehicle outside the residual space at the start of the test intrudes into the residual space during the test. Additionally, no part of the residual space projects outside the contour of the deformed structure.
- UNECE R-80 – Uniform provisions concerning approval of seats of large passenger vehicles and of these vehicles with regard to strength of the seats and their anchorages; requires that passenger seats pass either a dynamic or a static test, and seat anchorages must be capable of withstanding a specified load. Also specifies installation requirements for seats and conformity of production.
- UNECE R-114 – Uniform provisions concerning approval of:
  - Airbag module for a replacement airbag system; requires each airbag module to comply with either International Standard ISO 12097–2, Road Vehicles–Airbag Component Testing, Part 2 or comply with drop test, mechanical impact test, simultaneous vibration temperature test, thermal humidity cycling test, solar radiation simulation test, temperature shock test, and static deployment test.
  - Replacement steering wheel equipped with airbag module of approved type; requires that each steering wheel equipped with an airbag module comply with a heat test, a bending test, a torque test, and a fatigue test.
  - Replacement airbag system other than that installed in a steering wheel must comply with either International Standard ISO 12097–2, Road Vehicles–Airbag Component Testing, Part 2 or comply with drop test, mechanical impact test, simultaneous vibration temperature test, thermal humidity cycling test, solar radiation simulation test, temperature shock test, and static deployment test.

If a transit vehicle falls into the M2 category, meaning that the vehicle weighs less than 11,023 lb, UNECE R-135 would be applicable. UNECE R-135 establishes uniform provisions concerning the approval of vehicles regarding their Pole Side Impact (PSI) performance, requiring testing to be conducted with a WorldSID 50th percentile adult male dummy. The regulation requires that subsequent forces on the dummy comply with head injury, shoulder performance, thorax performance, abdominal performance, and pelvis performance criteria.

Additionally, requirements are established for the performance of door latches and fuel system integrity in the event of a PSI performance test. Note that most transit commuter buses are not categorized as M_2 vehicles.

Australian Design Rules

Another set of bus crashworthiness standards are Australian Design Rules (ADRs). Similar to the FMVSS and UNECE standards, the applicability of each ADR is dependent on vehicle classification. Focusing only on passenger vehicle classifications, the following vehicle categories exist:[16]

- Category MA – Passenger vehicles with up to nine seats, including driver seats, for vehicles that are not off-road or forward-control passenger vehicles.
- Category MB – Forward-control vehicles with up to nine seats, including driver seats, with the steering wheel in the forward quarter of the vehicle's total length and not an off-road vehicle.
- Category MC – Off-road passenger vehicles with up to nine seats, including that of the driver.
- Category MD – Light omnibus vehicles with gross vehicle mass not exceeding 5,000 kg (11,023 lb).
- Category ME – Heavy omnibus vehicles with gross vehicle mass exceeding 5,000 kg (11,023 lb).

Most transit bus vehicles, including many paratransit body-on-chassis vehicles, fit into the ME category, with the following applicable ME vehicle standards:

- ADR 3/03, Seats and Seat Anchorages – Requires child seat restraint anchorages to withstand either dynamic or equivalent static testing of 20 times the weight of the entire seat applied at the center of mass, both horizontally-forward and horizontally-rearward, sustained for at least one second, or compliance with UNECE R-17.[17]
- ADR 4/05, Seatbelts – Vehicle standard for seatbelts; requires compliance with UNECE R-16 and that side-facing seats comply with requirements for forward-facing seats, except upper torso restraints must not be provided.[18]
- ADR 5/05, Anchorages for Seatbelts – Requires that side-facing seats have anchorages for seatbelt assemblies that comply with the requirements for anchorages for seatbelt assemblies for forward-facing seats, except that upper torso anchorages for the seatbelt assemblies must not be provided and the direction of loading must comply with clause 5.3.1 (provides direction of loading for side-facing seats).[19]

---

[16] https://infrastructure.gov.au/roads/motor/design/files/ADR_Applicability_Summary-M-Group.pdf.
[17] https://www.legislation.gov.au/Details/F2007C00114.
[18] https://www.legislation.gov.au/Details/F2014C00230.
[19] https://www.legislation.gov.au/Details/F2009C00157.

- ADR 8/01, Safety Glazing Material – Vehicle standard for safety glazing material; requires compliance with UNECE R-43.[20]
- ADR 34/02, Child Restraint Anchorages and Child Restraint Anchor Fittings – Vehicle standards for child restraint anchorages and child restraint anchor fittings; requires that every vehicle provide at least one seat with one upper anchor fitting package. The seat with the fitting should be in the center rear seating position if applicable.[21]
- ADR 42/04, General Safety Requirements – Vehicle standards for general safety requirements; includes crashworthiness-related requirement for external or internal protrusions and that no vehicle be equipped with any non-essential object or fitting that protrudes from any part of the vehicle or any sharp-edged or pointed object or fitting that is likely to increase the risk of bodily injury to any person. Additionally, any essential object or fitting must be affixed in a manner to minimize the risk of bodily injury.[22]
- ADR 59/00, Standards for Omnibus Rollover Strength – Vehicle standards for omnibus rollover strength; requires that ME vehicles comply with UNECE R66 or a modified extract of the technical provisions of UNECE R-66, which includes general specifications and requirements, test methods, and subsequent residual space requirements, and interpretation of test results.[23]
- ADR 68/00, Occupant Protection in Buses – Vehicle standards for occupant protection in buses; requires that all seats with a reference height greater than 1.0 meter, other than the driver's seat, be tested to ensure that restrained occupants are protected from injury by impacting the seatback or other structure forward of the seat. Also requires testing of seat-anchorage strength and presence of seatbelt assemblies, seatbelt anchorages; a minimum of six seats must be provided with child restraint anchor fittings.[24]

International Society of Automotive Engineers Standards (SAE)

SAE is a global association with core competency of voluntary consensus standards development. An SAE bus crashworthiness-recommended practice is J2249_199901, Wheelchair Tie-down and Occupant Restraint System for Use in Motor Vehicles (WTORS).[25] SAE J2249 recommended practice applies to the design, testing, installation, and use of WTORS equipment that will provide effective wheelchair securement and occupant restraint in the case of a frontal collision. The 48 km/h (30 mph), 20g (0.04 lb) sled impact test is intended to qualify the use of WTORS in vehicles with a GVSR of less than 7,000 kg

[20] https://www.legislation.gov.au/Details/F2015C00542.
[21] https://www.legislation.gov.au/Details/F2012L00703.
[22] https://www.legislation.gov.au/Details/F2016C00153.
[23] https://www.legislation.gov.au/Details/F2012C00535.
[24] https://www.legislation.gov.au/Details/F2006L01454
[25] http://standards.sae.org/j2249_199901/.

(15,432 lb). The recommended practice notes that it may be possible to provide safe transportation in larger vehicles without complying with the level of crash severity referenced in this recommended practice. Further explanation of this recommended practice is explored in Section 3, "Existing Bus Crashworthiness Standards."

Florida Safety Testing Standard for Paratransit Buses

As noted, Florida enacted State rules for bus transit systems that operate with State funding. Cutaway vehicles, also known as paratransit body-on-chassis buses, are distinct from other types of transit buses due to their two-stage construction. First, a reputable auto manufacturer constructs a driver cab and chassis, and after, a smaller body is installed by a different a company that retrofits the cab and chassis with a passenger compartment and other necessary equipment.[26] The backside of the driver cab is also removed to allow for operator access to the passenger compartment of the vehicle. With the recognition that there are potentially additional crashworthiness weaknesses associated with a two-stage constructed vehicle, the Florida Department of Transportation (FDOT) has supported extensive research efforts regarding the crashworthiness and safety assessments of these vehicles. Detailed descriptions of the research findings are presented in Section 4 of this report.

FDOT also developed the Transit Research Inspection Procurement Services (TRIPS) program to provide agencies with a means of procuring quality vehicles at the lowest possible price. FDOT's "Rollover Crashworthiness Assessment" and "Prequalification Structural Testing for Cutaway Buses Acquired by the State of Florida" combine to comprise the Florida Standard (see Appendix A), which establishes the process that must be used to obtain pre-approval for paratransit buses purchased through Florida's Paratransit Vehicle Procurement Program (FVPP). The process includes crashworthiness testing and a safety assessment. Testing and validation ensure that vehicles are built to the specifications defined in procurement documents and are likely to pass what is defined as the complete assessment process,[27] which includes:

- Material testing of major structural components of the bus body
- Quasi-static tests of roof-to-wall and wall-to-floor connections
- Impact hammer test of a bus sidewall panel

Paratransit body-on-chassis buses are required to pass an experimental full-scale crash test for a numerical analysis using a Finite Element (FE) method for

[26] "Crash and Safety Assessment Program for Paratransit Buses," http://www.sciencedirect.com/science/article/pii/S0734743X0800119X.

[27] http://www.tripsflorida.org/docs/FDOT%20prequal%20std%203-18-15.pdf.

a rollover impact scenario, which is identified as critical and dangerous by bus manufacturers and operators in the U.S.[28]

The Florida Standard for rollover assessment was adopted from the UNECE R-66 standard. The assessment is performed using a tilt table that is quasi-statically rotated onto the weaker side of the vehicle (passenger door side) until the critical center of gravity point is reached, at which point the vehicle rolls off the table and onto the rigid-surfaced ditch located 800 mm (31.5 in.) beneath the tilt table horizontal position (see Appendix A).[29]

The pre-qualification structural testing is conducted on a sample panel cut from the wall of the paratransit bus, containing two major vertical beams and wall frame connections. The panel test initiates with the panel rested horizontally on raised tubular supports. A rotational device then impacts the panel with a square tube hammer from a specified height, which assures minimum structural deformation. Wall-to-roof and wall-to-floor connections are tested through an applied load to specified deformations to determine threshold values. Deformation characteristics and deflection are recorded and compared to numerical FE analyses results. Penetration of the survival space is used as a failure criterion in both tests.[30] The paratransit body-on-chassis is deemed to be crashworthy and safe if its survival space (Figure 3-2) is neither compromised by intrusion nor projection throughout the tests. In this standard, survival space is defined as space to be preserved in the passenger, crew, and driver compartments to provide a safe environment in case of an accident.[31]

Figure 3-2

Specification of Survival Space

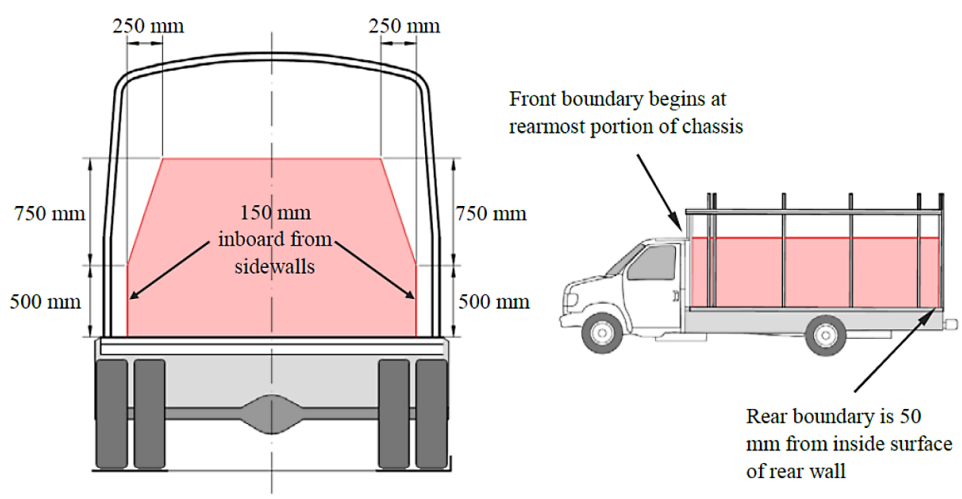

Source: "Rollover Crashworthiness Assessment for Cutaway Buses Acquired by the State of Florida," March 2015.

[28] *Ibid.*
[29] *Ibid.*
[30] *Ibid.*
[30] *Ibid.*

The Florida Standard recognizes the importance of verification and validation of any crashworthiness FE models and that all new vehicle types and updated models must undergo a full-scale rollover test and pre-qualification structural testing. Inputs to the FE model are obtained from material testing of major structural ports of the bus body, requiring that at least three sets of specimens from original bus components be delivered from the manufacturer for quasi-static tensile testing to determine material properties. The test is conducted until specified deformation occurs, and the associated stress-strain relation nominal values are converted to material properties and entered into the FE model.

Quasi-static connection tests are required for two of the most vulnerable connections in a paratransit body-on-chassis vehicle—roof-to-wall and wall-to-floor connections. For the quasi-static tests of the connections, loading and resulting displacement are recorded simultaneously until a specified deformation is reached. The data obtained in the test are used for validation of the connections in the FE model. An impact hammer test of a bus wall panel is performed to determine the material behavior due to a dynamic load application. The test is necessary because dynamic material behavior is often different from the static test strain rates. The results of the impact hammer test are compared with the computer simulations of the pendulum test and subsequently used for FE model validation. Mass distribution, center of gravity, and wheel reactions of the FE model are also compared with actual values from the manufacturer's specification or from *in situ* measurements to partially validate the FE model.

All transit vehicles purchased in Florida using 49 USC § 5310 funds must purchase vehicles through the TRIPS Program. Vehicles purchased through this program must meet the Florida Standard testing protocol discussed above and included in Appendix A.

Other Relevant Standards for Paratransit Buses

FMVSS 220 is related to school bus rollover protection. Although not statutorily-required, the quasi-static load test can be used to determine the strength and integrity of the paratransit body-on-chassis vehicle in the event of a rollover. Additionally, a standard that meets or exceeds UNECE R-66 can be used to determine the rollover strength of school buses. FMVSS 214 is related to side-impact testing standards, which also are not statutorily-required for paratransit body-on-chassis but can be used to calculate vehicle strength in a side-impact scenario. Several studies and associated reports have evaluated current testing standards for paratransit body-on-chassis; the resulting conclusions and subsequent recommendations are presented in the next section.

SECTION

4

Evaluation of Existing Bus Crashworthiness Standards

General Transit Bus (No Indication of Type)

One of the most difficult challenges when trying to determine the crashworthiness of transit buses is the lack of available data demonstrating the need for standards for these vehicles. Databases such as NHSTA's Fatality Analysis Reporting System (FARS), FTA's National Transit Database (NTD), and the National Automotive Sampling System General Estimates System (NASS GES) are not useful in determining leading indicators in fatality collision events or those with significant injuries. This is not only the case in the U.S., as international literature also reflects the lack of available data from transit bus vehicle collisions. A 2005 Austrian paper, "Enhanced Coach and Bus Occupant Safety," analyzed the connection between real-world accident scenes and mandatory tests and made a recommendation for a harmonized bus accident database.[32] As in the U.S., there is significant variation in European accident data reporting, making comparisons and subsequent recommendations difficult to substantiate.[33]

FTA has long recognized the importance of bus crashworthiness and CEM and supported FTA Report No. 0021, *Crashworthiness Evaluation of Mass Transit Buses*. This evaluation consisted of using computational and virtual reality methods to model crash effects on buses and occupants in addition to full-scale sled tests using a comprehensive set of crash dummies. The sled tests identified injury mechanisms and also validated the numerical models. The analysis focused on two main crashworthiness categories, structural analysis and interior design. Structural analysis focused on three main components, side-impact testing, rollover and roof-crush testing, and compatibility with other vehicles on the road. The research team also evaluated existing interior design elements for improved safety for bus operators and passengers.

FTA Report No. 0021 made operator-related design recommendations, including additional cab padding compounds to bolster knee impact areas to reduce the risk of femur injuries. Research identified other interior design recommendations, including the following:

[32]Mayrhofer, E., Steffan, H., and Hoschopf, H. (2005), "Enhanced Coach and Bus Occupant Safety," National Highway Traffic Safety Administration.

[33]*Ibid.*

- Redesign of seatbacks to provide head and neck support while minimizing unintended consequences of reduced visibility.
- Offset seat rows to improve the level of protection to seated occupants during severe side-impact collisions.
- Removal of rear center (aisle) seats to reduce the danger of standing occupants being struck by seated passengers.

These recommendations were notable based on the results of several other research studies cited in FTA Report No. 0021.

Structural Vehicle Performance Evaluation

Bus structural integrity performance during rollover events can be tested by using either a force application at a specified rate or quasi-static tilt procedure. Standards 49 CFR 571.216, Roof Crush Resistance and 571.220, School Bus Rollover Protection are based on a quasi-static test in which a force equal to 1.5 times the unloaded vehicle weight is applied to the roof of the vehicle's body structure through a force application plate at a rate of no more than 13 mm per second.[34] Once the required force is applied, the deflection is measured, which cannot exceed 130 mm. Emergency exits must be capable of opening at the maximum deflection for the vehicle to pass.[35]

Alternatively, UNECE R-66 requires a quasi-static test procedure in which a vehicle is placed on a tilting platform and is tilted slowly to an unstable equilibrium position located 800 mm above the dry, smooth concrete ground surface.[36] The vehicle rolls onto the ground surface and deformations are measured to determine if the resulting residual space is adequate, as defined in UNECE R-66. If the residual space is sufficient, the vehicle is approved.[37]

ADR specifically references the UNECE R-66 regulation, and the Minnesota Administrative Rules reference 49 CFR 571.216 and 571.220 standards. Both the Florida Administrative Code and APTA Standard Bus Procurement Guidelines[38] call for the requirement of structural integrity in the event of a rollover or side impact collision.

In APTA's Standard Bus Procurement Guidelines, which includes a boilerplate Request for Proposals, APTA suggests the following language for transit agencies that are undertaking a transit bus procurement:

---

[34] https://www.ecfr.gov/cgi-bin/retrieveECFR?gp=&SID=bc402070bf156ce6b5d4b2bd7c375da7&mc=true&n=pt49.6.571&r=PART&ty=HTML%20-%20se49.6.571_1204#_top.
[35] *Ibid.*
[36] https://www.unece.org/fileadmin/DAM/trans/main/wp29/wp29regs/r066r1e.pdf.
[37] *Ibid.*
[38] https://www.apta.com/research-technical-resources/standards/procurement/apta-bts-bpg-gl-001-13/.

TS 1.1 Crashworthiness (Transit Coach)

The bus body and roof structure shall withstand a static load equal to 150 percent of the curb weight evenly distributed on the roof with no more than a 6 in. reduction in any interior dimension. Windows shall remain in place and shall not open under such a load. These requirements must be met without the roof-mounted equipment installed.

The bus shall withstand a 25-mph impact by a 4000-lb automobile at any side, excluding doorways, along either side of the bus and the articulated joint, if applicable, with no more than 3 in. of permanent structural deformation at seated passenger hip height. This impact shall not result in sharp edges or protrusions in the bus interior.

Exterior panels below 35 in. from ground level shall withstand a static load of 2000 lb applied perpendicular to the bus by a pad no larger than 5 sq. in. This load shall not result in deformation that prevents installation of new exterior panels to restore the original appearance of the bus.[39]

In 2005, Mayrhofer et al. presented a paper at the NHTSA 19th International Technical Conference on the enhanced safety of vehicles that analyzed the connection between real-world accident scenes and mandatory test methods to determine if those methods are sufficient to provide bus occupant safety.[40] Due to a lack of available accident reconstruction data, the analysis was based on 36 accident case studies. The authors' suggestions for written standards were categorized into Rollover, Frontal/Rear Impact, and Proposals for New Regulations. One structural recommendation was related to driver protection in frontal impact scenarios, citing that at the time of the study, UNECE standards did not exist and further research would be required to define the requirements for a suitable test. The only other structural recommendation was to consider compatibility of the bus with other vehicles, including both industrial and personal vehicles, with both operator and passenger protection in mind.[41] The remainder of the recommendations from the report were related to secondary impact protection.

FTA research that began in 2006 had objectives of characterizing structural mass transit bus crashworthiness plus bus occupant kinematics and injury mechanisms and proposed interior design guidelines for mass transit buses. The intention was that resultant guidelines would be identified to assist public transit agencies in procuring vehicles with the best optional structural and interior designs to reduce occupant injuries and fatalities. The work began in 2006 with an unpublished report by Olivares titled "Transit Bus Crashworthiness: Finite Element Modeling and Validation," which described the methodological

[39] *Ibid.*
[40] Mayrhofer, Steffan, and Hoschopf (2005), "Enhanced Coach and Bus Occupant Safety," *op. cit.*
[41] *Ibid.*

approach to the FE model and validation of that model for low-floor mass transit buses (typical 40-ft transit coaches). However, the report did not substantiate the need to further validate FE models with additional physical testing, noting that the required time and expense made this verification impractical. Olivares indicated that the FE models potentially can be used to characterize structural responses in different crash scenarios, allowing for the development of effective crashworthiness guidelines. The initial Olivares FE model was used in this study as a starting point for subsequent studies, and full-scale tests were used to edit and verify the developed FE model over the following few years. FTA Report No. 0021, authored by Olivares, built upon this work. His subsequent work, "Crashworthiness and Analysis: Verifying FEA Modeling Capabilities by Accident Reconstruction," demonstrated, through the simulation of a Turkish Airline crash in 2009 that the results from these models "predicted critical damage and demonstrated parameters, such as survivable volume and egress paths as evidence in the actual crash."

Secondary Impact Evaluation

The 2009 NHTSA research report "Injury Mechanisms to Mass Transit Bus Passengers during Frontal, Side and Rear Impact Crash Scenarios" built upon the 2006 Olivares study and provided results from a detailed low floor transit bus FE model, which calculated forces and corresponding structural damage due to frontal, side, and rear-impact collisions. In the NHTSA study, the authors reviewed the seat design arrangements from APTA's Standard Bus Procurement Guidelines to identify impact injury mechanism focal points for the three types of tests. In the frontal collision tests, the most common type of injury mechanism for passengers in forward-facing seat configurations was neck flexion or extension due to lack of restraints and low seatback designs. This study suggested that the seatbacks could be improved by applying compartmentalization principles into seat designs to reduce injury severities. FE model simulations for side-impact collisions revealed that the most common injury mechanisms for passengers seated on side-facing seats were head and neck injuries due to head-to-head or head-to-body contacts and femur injuries due to contact with an opposing seat. In rear-impact collision tests, the most common injury mechanism was neck extension due to low seatback design combined with rearward rotational stiffness of the seatbacks, which could be mitigated with modified designs to the seatback.

Outside the U.S., the Mayrhofer et al. study made several occupant secondary impact recommendations, including standards mandating the use of seatbelts and preference for three-point seatbelt systems, which they suggest have better frontal and rear impact performance than two point systems.[42] Further recommendations made by the authors included attaching passenger seats

[42] *Ibid.*

to a rigid floor structure that does not absorb energy during impact (seat manufacturers would no longer have to tailor bus seat designs for each manufacturer) and considering the mass of belted occupants for calculations and testing of buses involved in rollover scenarios.[43]

Paratransit Body-on-Chassis Buses (Cutaways)

Specific structural and secondary-impact testing for paratransit body-chassis vehicles (or "cutaways") is somewhat limited and includes simulation of collision events using validated FE models, as represented in literature that documents the utility of the Florida Standard. With the limited documentation available, demonstrating the need for vehicle safety standards applicable to medium-size paratransit buses is difficult. However, there is much to learn from the research and testing that have been performed and more notably from collision events of similar vehicles discussed in subsequent sections of this report.

As noted, paratransit body-on-chassis buses (cutaways) exceed the 10,000-lb GVWR that pushes them over the weight thresholds of many FMVSS standards. Additionally, the two-part assembly of a cutaway vehicle can lead to construction inconsistencies and, subsequently, vulnerability in crashworthiness and structural integrity. The "Crash and Safety Assessment Program for Paratransit Buses" study conducted for FDOT indicated that the "lack of standards for these vehicles may result in poor crashworthiness characteristics of the bus structure and in severe injuries and possible passenger fatalities." The authors further suggested that because there are limited standards for these types of vehicles, those constructed present a variety of structural strengths, crashworthiness, interior protection, and other elements.

Structural Vehicle Performance Evaluation of Cutaway Buses

Two types of bus collisions likely to result in intrusion of residual paratransit occupant space are roof crush due to rollovers and side-impact collisions.[44] In addition to loss of residual space, it is important to consider the secondary impacts to occupants that contribute injuries or fatalities.

Crashworthiness in Rollover Events

Several studies have examined roof crush/rollover testing alternatives, specifically concerning results related to paratransit body-on-chassis buses because they are not regulated by any national crashworthiness standard. However, several states in the U.S. try to overcome this deficiency by requiring paratransit buses

[43] *Ibid.*
[44] https://www-esv.nhtsa.dot.gov/Proceedings/21/09-0261.pdf.

to comply with the school bus rollover strength requirements laid out in FMVSS 220.[45] However, many studies have questioned which regulation (FMVSS or UNECE R-66) is more realistic and which should be used as governing criteria for vehicle approval.[46,47,48,49,50] Although both FMVSS 220 and UNECE R-66 have the purpose of assessing the strength of a bus in their approval process, their outcomes diverge,[51] as discussed in the following section, which has led to analyses to determine which test is appropriate for paratransit body-on-chassis use.

One such analysis comparison was performed comparing the dynamic UNECE R-66 and the quasi-static FMVSS 220 paratransit bus standards.[52] (It is important to note that neither FMVSS 220 nor UNECE R-66 are directly applicable to cutaway vehicles.) In this analysis, the bus being tested passed the quasi-static load resistance test of FMVSS 220, but failed the dynamic rollover test of UNECE R-66. The failure of the R-66 test was associated primarily with the plastic hinges located in the frontal part of the body, at the waist rail, and in wall-to-roof connections.[53] The researchers established that "quasi-static load resistance testing of the roof structure does not give sufficient indication on how the structure will behave during a dynamic rollover accident."[54] The 2011 report on roof crush resistance by Bojanowski et al. concluded that testing paratransit buses to the FMVSS 220 standard may lead to erroneous conclusions regarding real-world performance, bus strength, and structural integrity.[55]

"Structural Response of Paratransit Buses in Rollover Accidents" examined the Champion Challenger paratransit bus crashworthiness through an FE model. The study aimed to test rollover structural performance and found that permanent deflections were very small and were limited to the transition zone directly behind the driver's cab. However, the authors concluded that the FMVSS 220 standard did not address the special needs for the safety of passengers on paratransit buses, noting that UNECE R-66 adequately addresses the shortcomings of the FMVSS 220 standard test.[56]

A similar study, "Material and Structural Crashworthiness Characterization of Paratransit Buses," also acknowledged that the FMVSS standards for reducing

[45] https://www.dynamore.de/de/download/papers/konferenz11/papers/session1-paper4.pdf.
[46] *Ibid.*
[47] https://journals.sagepub.com/doi/pdf/10.3141/2281-08.
[48] http://www.tandfonline.com/doi/pdf/10.1080/13588260701483680?needAccess=true.
[49] https://fsu.digital.flvc.org/islandora/object/fsu:252829/datastream/PDF/view.
[50] http://www.tandfonline.com/doi/pdf/10.1080/13588260701440920?needAccess=true.
[51] Bojanowski, C., Kwasniewski, L., Rawl, C., and Wekezer, J. (2011), "Roof Crush Resistance and Rollover Strength of a Paratransit Bus," 8th European LS-DYNA® Users Conference, Strasbourg, May.
[52] Gepner B., Rawl C., Kwasniewski L., Bojanowsk,i C., and Wekezer J. (2010), "Comparison of ECE-R66 And FMVSS 220 Tests for A Selected Paratransit Bus," https://tmaarc.org/portfolio/comparison-of-ece-r66-and-fmvss-220-tests-for-a-selected-paratransit-bus/.
[53] *Ibid.*
[54] *Ibid.*
[55] Bojanowski, Kwasniewski et al. (2011), "Roof Crush Resistance and Rollover Strength of a Paratransit Bus," *op. cit.*
[56] Bojanowski, Gepner et al. (2010), "Comparison of ECE-R-66 and FMVSS 220 Tests for a Selected Paratransit Bus," *op. cit.*

injury severity and fatalities do not apply directly to paratransit body-on-chassis buses. Their study examined the crashworthiness of the 14-seat Champion Challenger (built on a Ford Econoline chassis) using a nonlinear, explicit, dynamic FE code for quantitative assessment of the bus. The researchers performed coupon testing to develop a validated and reliable bus model. It is noteworthy that there were no full-scale, physical tests performed to verify the results of the FE model. The study concluded that the structural members used for the passenger compartment were very strong, but their connection designs exhibited weaknesses. The authors suggested that an improved balance between weaker structural members and stronger connections to the chassis in the passenger compartment would increase the crashworthiness and energy absorption of the bus structure.[57]

Gepner's dissertation, "Rollover Procedures for Crashworthiness Assessment of Paratransit Bus Structures," presents the initial stages in the development of a rollover safety assessment protocol developed for paratransit buses. An update of the approval procedure, the Equivalent Rollover Testing (ERT) procedure, was included in the dissertation and established a set of experimental tests on the components of the bus structure that, if satisfied, would provide a high level of confidence that the tested bus will pass the requirements of the UNECE R-66 rollover procedures. The procedure was tested through the parametric studies of five detailed FE models of a wide range of paratransit vehicles (132 bus designs), and testing included seven component tests, all of which had to be passed for the paratransit body-on-chassis to pass the crashworthiness assessment. The seven components included a frontal ring test, a rear wall test, a wall-to-floor connection test, a wall-to-roof connection test, a panel impact test, and static tube and dynamic tube testing. ERT tests proved to be less stringent, representing a "conservative approach" to paratransit bus safety evaluation. The utility of the ERT test, in comparison to the UNECE R-66, was established by comparing outcomes. Of the 132 test cases, all buses that passed the ERT procedure also passed the full-scale UNECE R-66 rollover test. Through testing and analysis, the author concluded that paratransit buses are prone to what is described as a "dangerous deformation pattern" that results in the collapse of the frontal ring (Figure 4-1). Recognition of the strength of the rear wall is also highly indicative of positive rollover outcomes. This finding illustrates of the significance of ensuring the strength of the cage design, particularly that of the frontal ring and rear wall.[58]

---

[57]Horstemeyer , M.F., H. Li , J. Siervogel, L. Kwasniewski, J. Wekezer, B. Christiana, G. Roufa (2007), "Material and Structural Crashworthiness Characterization of Paratransit Buses," *International Journal of Crashworthiness*, 12:5, 509-520.

[58]Gepner (2014), "Rollover Procedures for Crashworthiness Assessment of Paratransit Bus Structures," *op. cit.*

Figure 4-1

Frontal Ring and Rear Wall of Paratransit Bus

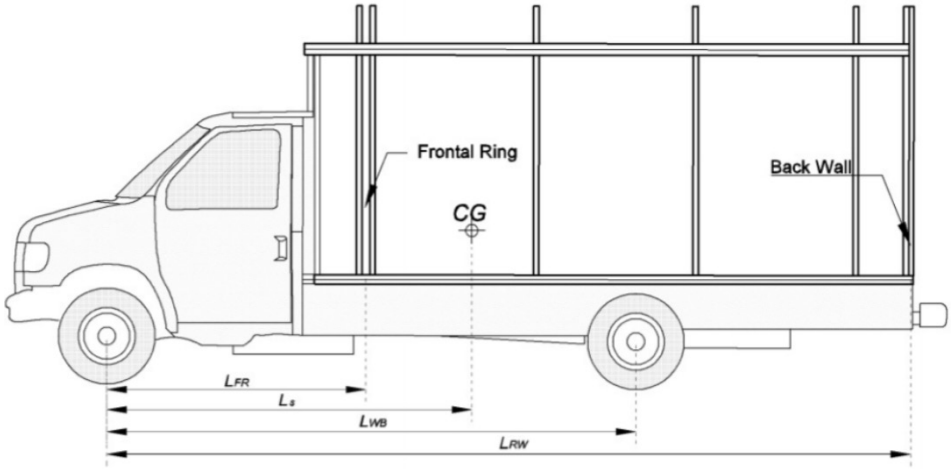

Source: Gepner, "Rollover Procedures for Crashworthiness Assessment of Paratransit Bus Structures"

In "Strain Rate Dependency in Paratransit Vehicle Rollover," Gepner et al. likewise established that the most significant deformation occurred during rollover testing into the frontal area or frontal ring of the bus. The reason for this phenomenon was that the heaviest components of the vehicle, such as the engine and transmission, are placed at the front axle of the vehicle and the center of gravity is closer to the frontal area than the rear wall. The deformation observed through the tests performed and referenced in the report is illustrated in Figure 4-2.

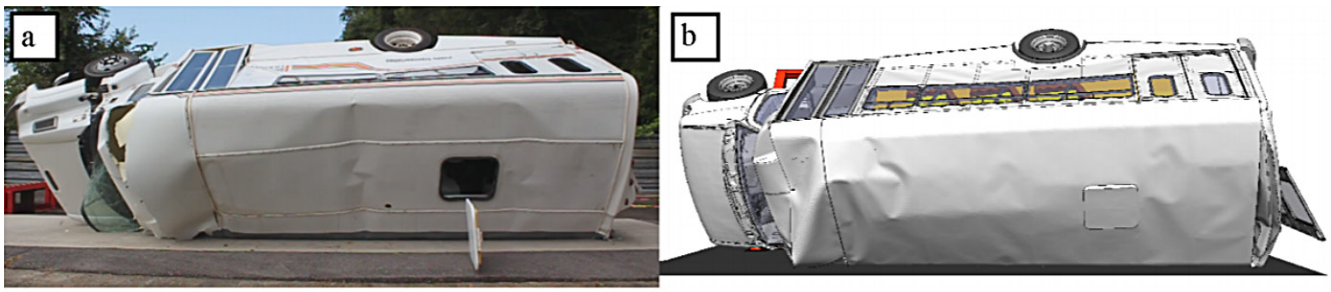

Source: Gepner, "Strain Rate Dependency in Paratransit Vehicle Rollover."

Figure 4-2

(a) Deformation of Frontal Ring from Test, (b) Deformation Graphic Produced by FE Model

Gepner's strain report also examined the effect of structural steel strain rate dependency on the outcome of the FDOT/ECE R-66 bus rollover test. The researchers performed bending and impact tests on structural tubing to evaluate strain rate dependency parameters and reflected that unlike the strain rate effect on other types of impacts, such as a frontal crash, their results showed that the strain rate had no significant effect on the FDOT/ECE-R66 rollover test. The authors' conclusion was that "therefore, the

current approach used by researchers investigating bus rollovers, to validate FE models based on quasi-static experiments, is well-grounded and the strain rate dependent effects may be ignored for the global deformation response in the ECE-R66 bus rollover."[59] Additionally, the skin of the bus and solidity of the connections to internal structural members greatly contributes to the bus structure strength.[60]

Side-impact Structural Crashworthiness

According to the U.S. Bureau of Economic Analysis (BEA), truck and SUV sales for 2006–2016 accounted for more than 60% of all light vehicles sold in the U.S. for the first time in history.[61] This upward trend of truck and SUV sales continues, as reflected in the most recent data available from BEA. During July 2018–June 2019, light truck/SUV sales represented 70.3% of total vehicle sales, compared with autos at 29.7% of vehicle sales. This trend is significant because it emphasizes the importance of the height increase of the movable deformable barrier (MDB) in testing the structural crashworthiness of a vehicle in a side impact event. The height and weight increases associated with trucks and SUVs may result in increased severity of passenger injury and bus structural deformation in the event of a side impact collision due to compatibility.[62] To account for these differences in the typical vehicle fleet on the road today, the Insurance Institute for Highway Safety (IIHS) uses a heavier MDB that weighs 3,307 lb and is 14.9 in. off the ground, which is higher than the 12.99 in. prescribed in the NHTSA laboratory test procedure for FMVSS 214, as shown in Figure 4-3.[63]

---

[59] *Ibid.*

[60] Bojanowski, C., Kwasniewski, L., and Wekezer J. (2013), "Comprehensive Rollover Testing of Paratransit Buses. *International Journal of Heavy Vehicle Systems*, 20(1), http://www.inderscienceonline.com/doi/abs/10.1504/IJHVS.2013.051103?journalCode=ijhvs.

[61] Analysis of Bureau of Economic Analysis Auto and Truck Historical Truck Share (April 5, 2017), data retrieved from https://www.google.com/url?sa=t&rct=j&q=&esrc=s&source=web&cd=2&cad=rja&uact=8&ved=0ahUKEwjgIlmWicXTAhVD8CYKHeURA24QFggsMAE&url=https%3A%2F%2Fwww.bea.gov%2Fnational%2Fxls%2Fgap_hist.xlsx&usg=AFQjCNHApMmLzfy4B7iD0P4B6vr343fYIw.

[62] Kwasniewski, L. Bojanowski, C., Siervogel, J., Wekezer, J., and Cichocki, K. (2009), "Crash and Safety Assessment Program for Paratransit Buses," International Journal of Impact Engineering, 36(2), 235-242, http://www.sciencedirect.com/science/article/pii/S0734743X0800119X.

[63] Insurance Institute for Highway Safety and Highway Loss Data Institute (January 2001), "New Crash Test Barrier is Key to Improving Side Impact Protection," Status Report 36(1), http://www.iihs.org/iihs/sr/statusreport/article/36/1/3.

Figure 4-3

NHTSA MBD for FMVSS 214 Testing (left) vs. IIHS MBD (right) Heights

Photo credit: IIHS

The crash and safety assessment program for paratransit buses developed for the FDOT Transit Office was studied in 2009 and revealed that existing side impact standards in the U.S. vary in several ways, including anthropomorphic test devices (ATDs), movable barriers, types of impacting cars, and criteria for level of safety.[64] Although FMVSS 214, "Side Impact Protection" calls for a 3,015-lb barrier and U.S. side impact dummy, the Side Impact New Car Assessment Program (SINCAP) requires an increased velocity of the movable barrier along with different injury criteria levels for the ATD. The SINCAP moving barrier side impact test procedure is based on FMVSS 214, but the primary purpose of the SINCAP is to establish and disseminate side-impact protection information rather than recommend pass/fail requirements.[65] In the Florida Standard, a side-impact test is defined as an experimental collision of an SUV or a pickup truck crashing into the driver side of a stationary paratransit bus. The impacting vehicle must approach the paratransit bus at a 90-degree angle, located 100 mm forward of the rear wheel of the paratransit bus, at a velocity of 30 mph. The paratransit bus passes the test by providing uncompromised passenger compartment residual space.[66]

APTA's *Standard Bus Procurement Guidelines* (2013) outlines a request for proposals for bus procurement and includes section TS 23.2, Crashworthiness (Transit Coach). TS 23.2 stipulates that the bus withstand a 25-mph impact by a 4,000-lb

[64]Kwasniewski, Bojanowski et al. (2009), "Crash and Safety Assessment Program for Paratransit Buses," *op. cit.*
[65]U.S. DOT, National Highway Traffic Safety Administration (2012), "Laboratory Test Procedure for the New Car Assessment Program Side Impact Moving Deformable Barrier Test, https://www.safercar.gov/staticfiles/safercar/NCAP/T_NHTSA-Laboratory_Test_Procedure_NCAP.pdf.
[66]http://www.fdot.gov/transit/Pages/CrashSafetyTestingStandardsFullDocument.pdf.

automobile at any side, excluding doorways, along either side of the bus, with no more than 3 in. of permanent structural deformation at the seated passenger hip height.[67] In Olivares's study on mass transit bus crashworthiness, the author recommended that the APTA guidelines be updated to use a side-impact standard similar to FMVSS 214 or the IIHS side crash test.[68] Florida's Crash and Safety Testing Standard removed the full-scale side-impact requirement in a 2015 revision.[69] Table 4-1 compares the details of the two versions of side-impact tests reflected in this report.

Table 4-1

Comparison of Side-Impact Tests

	FMVSS 214[70]	IIHS Side Crash Test[71]
Bumper height from ground	330 mm (12.99 in.)	379 mm (14.92 in.)
Weight	1,367.6 ± 4.5 kg (3,015 lb)	1,500 ± 5 kg (3,307 lb)
Impact angle	90 deg	90 deg
Impact speed	53 ±1.0 km/h (33.5 mph)	50 km/h (31.1 mi/h)
Pass criteria	Crash dummy head injury criteria <1,000	Crash dummy head injury criteria <1,000

Secondary-Impact Evaluation

"Study of Improved Safety for Minibuses by Better Seat and Occupant Retention" established that whereas the probability of fatal or serious injury increases if a minibus[72] overturns or is impacted from the side, the initial event is not the only risk of injury for the passengers and that the initial event may lead to the possibility for secondary impacts with fixed objects, such as seatbacks or dynamic objects such as other passengers.[73] This study was performed to describe a suitable crash pulse for testing minibus seatbelt systems that represent real-life accident situations and establish the performance of current seatbelt systems. Two vehicles tested for this study were "coach-built" body-on-chassis paratransit vehicles. The test used was based on the most common impact condition in the UK, a perpendicular impact at a speed of 30.9 mph. The body-on-chassis vehicles sustained either floor failure, seat failure, or seat detachment. Further tests were performed to determine the best mitigating scenario, and results revealed the necessity of a third row of tracking for seat-fixing accompanied by an extra middle pair of legs fitted to each double seat unit to accommodate the additional

[67]APTA Standard Bus Procurement Guidelines Technical Specifications (2013), https://www.apta.com/research-technical-resources/standards/procurement/apta-bts-bpg-gl-001-13/.
[68]Olivares (2009), "Mass Transit Bus Crashworthiness Research Overview," *op. cit.*
[69]http://www.tripsflorida.org/docs/FDOT%20prequal%20std%203-18-15.pdf.
[70]U.S. Department of Transportation, "NHTSA Laboratory Test Procedure for FMVSS No. 214, Dynamic Side Impact Protection (TP-214D-09)," https://www.nhtsa.gov/vehicle-manufacturers/test-procedures?procedurePage=2&procedureOrder=.
[71]IIHS, "Side Impact Crashworthiness Evaluation Crash Test Protocol (Version X)," July 2017. Table includes properties of moving deformable barrier alignment. https://www.iihs.org/media/ebc9bd1f-2ca4-4fb9-b96e-f4165f331943/Jil-Xg/Ratings/Protocols/current/test_protocol_side.pdf.
[72]Minibus includes line-built and modified vans, converted vans, and smaller coach-built transit vehicles (body-on-chasses vehicles).
[73]Graham J., and Lawrence, L. (2001), "Study of Improved Safety for Minibuses by Better Seat and Occupant Retention," National Highway Traffic Safety Administration, https://www-nrd.nhtsa.dot.gov/pdf/ESV/esv17/Proceed/00234.pdf.

tracking. The seating legs were also strengthened and reinforced leading to improved performance.[74] Two other characteristics that contributed to occupant protection included seatbelt use and seatback design.

The study confirmed that wearing seatbelts reduces the risk of ejection, which greatly increases the likelihood of serious injury. Additionally, seatbacks that are designed to bend forward and absorb energy when overloaded were found to be beneficial. Another seatback characteristic that appeared to be effective in preventing excessive knee penetration was the fitting of thin (0.5mm) sheet metal to the back of the seat. Finally, the top of the seatbacks were replaced with an upper and lower steel strip designed to bend on head contact to reduce the head impact forces.[75] This idea of reducing head impact forces is similar to the suggestion by Olivares for general transit bus crashworthiness, which includes increasing the height of headrests to reduce neck injuries in frontal impact scenarios.[76] An examination of occupant protection regulations across five continents revealed that Europe and Australia mandate the use of seatbelts in motorcoaches if seatbelts are available on the bus; South Africa and the U.S. require only driver seatbelt use, and Canada, Brazil, and Peru do not have seatbelt-wearing regulations at all.[77]

National Transportation Safety Board (NTSB) Investigations

In 2017, NTSB investigated a March 29, 2017, collision between a pickup truck and a medium-size bus in Concan, Texas, and NTSB HAR report 18/02 was issued in October 2018. Although the collision was due to the inability of the truck operator to control his vehicle due to impairment, there were findings associated with the bus. H-18-58 recommended to NHTSA that FMVSS 210 be modified to increase the minimum anchorage spacing for individual seatbelt assemblies considering the dynamic testing of seatbelt designs, seatbelt fit, and vehicle configuration.

Based on the fatalities and injuries sustained by bus occupants in the Concan collision, which included severe lateral abdominal and pelvic injuries (see Figures 4-4 and 4-5), NTSB concluded that because lap/shoulder belts provide a greater level of occupant protection than lap belts, they should be installed as standard equipment on medium-size buses. FMVSS 208 specifies performance requirements for the protection of vehicle occupants in crashes. Because NHTSA excluded medium-size buses from the requirement for installing passenger lap/shoulder belts, NTSB recommended that NHTSA amend FMVSS 208 to require lap/shoulder belts for each passenger seating position on all new buses with

[74] *Ibid.*
[75] *Ibid.*
[76] Olivares (2009), "Mass Transit Bus Crashworthiness Research Overview," *op. cit.*
[77] Bozzini, S., Shipp, C., Friedman, D., and Dugay. E. (2013), "An Examination and Comparison of Passenger Transport Bus Occupant Protection Regulations Across 5 Continents," https://www-esv.nhtsa.dot.gov/Proceedings/23/files/23ESV-000469.PDF.

a GVWR of more than 10,000 lb but not greater than 26,000 lb (H-18-59).[78] It continued with the recommendation that bus manufacturers (specifically referenced in the report) of these vehicles[79] install lap/shoulder belts in all seating positions as standard equipment in all newly-manufactured buses (H-18-62).

In the investigation of a September 2014 collision in Davis, Oklahoma, between a truck-tractor semitrailer and a medium-size bus, the NTSB report stated that "the NTSB recognizes that the medium-size buses, regardless of weight, operate in a manner similar to motorcoaches."[80] This side-impact collision resulted in broken-out windows and the ejection of unbelted passengers. The NTSB concluded that crashworthiness of medium-size buses (GVWR between 10,000 and 26,000 lb) can be improved by requiring them to meet motorcoach occupant protection standards, reiterating Safety Recommendation H-10-3.

Figure 4-4

Medium-Size Bus Seating Chart, Areas of Intrusion

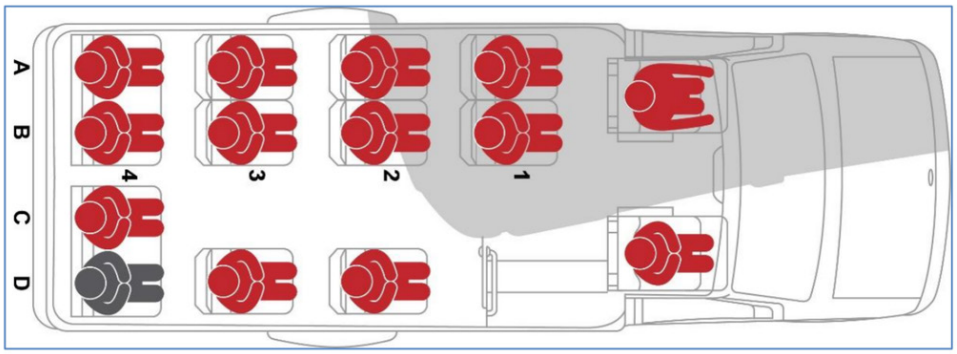

Red = occupant fatalities, gray = serious injuries
Source: NTSB HAR 18-02 (Concan, TX)

Figure 4-5

Motion of Lap-Belted Occupant in Frontal Collision vs. Lap/Shoulder Belted Occupant

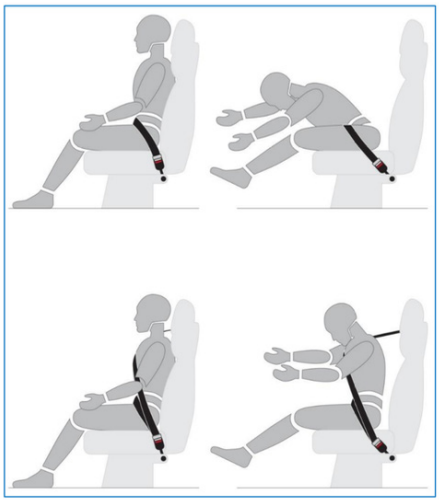

Source: NTSB HAR 18-02 (Concan, TX)

[78] https://www.ntsb.gov/investigations/AccidentReports/Reports/HAR1802.pdf.
[79] Medium-size bus manufacturers include ARBOC Specialty Vehicles, LLC; Coach & Equipment Manufacturing Corporation; REV Group, Inc. (Champion Bus, Inc., and ElDorado); Diamond Coach Corporation; Forest River, Inc. (Elkhart Coach, Glaval Bus, Starcraft Bus, and Turtle Top); Girardin Blue Bird (Micro Bird Inc.); SVO Group, Inc.; and Thomas Built Buses.
[80] https://www.ntsb.gov/investigations/AccidentReports/Reports/HAR1503.pdf

In 2010, NTSB issued Safety Recommendation H-10-3 to NHTSA in response to the investigation of the Dolan Springs rollover collision that resulted in seven fatalities. The recommendation states, "In your rulemaking to improve motorcoach roof strength, occupant protection, and window glazing standards, include all buses with a GVWR above 10,000 lb, other than school buses."[81] NHTSA responded that mid-size buses were discussed in the Final Rule, and the agency decided not to expand applicability to vehicles between 10,000 and 26,000 lb because the "development of a regulation for these buses was not found to be cost beneficial."[82] Furthermore, the Davis collision led to NTSB recommendation H-15-40 that NHTSA develop a side-impact protection standard for all newly-constructed medium-size buses regardless of weight. NHTSA responded in April 2016, indicating that the construction of medium-size buses would be examined to best ensure that occupants of these vehicles would be protected during a side-impact.[83] Damage sustained due to both collisions is shown in Figure 4-6.

Photo credit: NTSB

Figure 4-6

Damaged Paratransit Buses from Davis, OK (left) and Dolan Springs, AZ (right) Crashes

"NHTSA's Approach to Motorcoach Safety" focuses on inter-city motorcoaches, and the safety recommendations are largely applicable to cutaway vehicles, as they often operate in a similar manner, as noted previously. In this report, six safety recommendations were issued that included those from a 1999 NTSB Highway Special Investigation Report that examined motorcoach crashworthiness of 40 bus crashes.[84] The six recommendations were as follows:

---

[81] *Ibid.*
[82] https://www.ntsb.gov/_layouts/ntsb.recsearch/Recommendation.aspx?Rec=H-15-040.
[83] *Ibid.*
[84] https://www.ntsb.gov/news/events/documents/sir-99-04-SIR9904.pdf.

- H-99-43: In one year and in cooperation with the bus manufacturers, complete the development of standard definitions and classifications for each of the different bus body types, and include these definitions and classifications in the FMVSS. (Closed – unacceptable action/ superseded by H-10-02.)[85]
- H-99-47 (MW): In two years, develop performance standards for motorcoach occupant protection systems that account for frontal impact collisions, side impact collisions, rear impact collisions, and rollovers. (Closed – acceptable action requires installation of lap/shoulder belts at all passenger seating positions including motorcoach-style buses.)[86]
- H-99-48: Once pertinent standards have been developed for motorcoach occupant protection systems, require newly manufactured motorcoaches to have an occupant crash protection system that meets the newly developed performance standards and retains passengers, including those in child safety restraint systems, within the seating compartment throughout the accident sequence for all accident scenarios. (Closed – acceptable action requires installation of lap/shoulder belts at all passenger seating positions including motorcoach-style buses.)[87]
- H-99-49: Expand research on current glazing to include its applicability to motorcoach occupant ejection prevention, and revise window glazing requirements for newly-manufactured motorcoaches based on the results of this research. (Open – unacceptable response due to slow progress.)[88]
- H-99-50 (MW): In 2 years, issue performance standards for motorcoach roof strength that provide maximum survival space for all seating positions and that take into account current typical motorcoach window dimensions. (Open – unacceptable response due to applicability exclusion of medium-size buses.)[89]
- H-99-51: Once performance standards have been developed for motorcoach roof strength, require newly-manufactured motorcoaches to meet those standards." [90](Open – unacceptable response due to applicability exclusion of medium-size buses.)[91]

---

[85]https://www.ntsb.gov/safety/safety-recs/RecLetters/H-10-001-007.pdf#search=H%2D10%2D02.
[86]https://data.ntsb.gov/carol-main-public/sr-details/H-99-047.
[87]https://data.ntsb.gov/carol-main-public/sr-details/H-99-048
[88]https://data.ntsb.gov/carol-main-public/sr-details/H-99-049.
[89]https://data.ntsb.gov/carol-main-public/sr-details/H-99-050.
[90]"NHTSA's Approach to Motorcoach Safety" (2007), https://www.nhtsa.gov/DOT/NHTSA/Vehicle%20Safety/Articles/Associated%20Files/481217.pdf.
[91]https://data.ntsb.gov/carol-main-public/sr-details/H-99-051.

NTSB investigated many bus rollover collisions, with the following excerpt from a 2012 response:

> NHTSA has tested motorcoaches to the school bus roof strength standard. The two motorcoaches NHTSA tested in this fashion showed roof displacements of more than five times the allowable limit prescribed in 49 CFR § 571.220. Although NHTSA is working to improve motorcoach occupant protection and roof strength, standards are needed to advance these efforts effectively.[92]

The NTSB investigation of a January 2016 motorcoach collision in San Jose, California, reported that the operator seat of the coach completely separated. NTSB recommended "that MCI evaluate and, if appropriate, modify the driver and passenger floor structure design on new motorcoaches to prevent driver seat separation during crashes."[93]

[92] https://data.ntsb.gov/carol-main-public/sr-details/H-99-047.
[93] https://www.ntsb.gov/investigations/AccidentReports/Reports/HSR1701.pdf.

SECTION

5

Data Presentation and Gap Analysis

Paratransit buses comprise a significant share of the total national bus fleet and, as such, research on bus crashworthiness should consider these vehicles. In FTA Statistical Summaries, paratransit body-on-chassis are categorized as "less than 30-ft buses," which account for 34% of total vehicles purchased with FTA grant funds between 2011 and 2015.[94] Paratransit trips are often longer trips that operate in rural environments on two-lane highways with higher traveling speeds, contributing to the need for the inclusion of cutaway vehicles in the national safety standards discussion. Although these vehicles comprise a significant portion of the transit bus vehicles purchased with FTA funding, there are challenges associated with establishing the need for crashworthiness standards due to the limited number of fatal collision events that involve these vehicles and the very limited data associated with these events.

The limitations of NTD data are discussed below and within FTA's Safety Standards Strategic Plan. For paratransit buses operating in rural areas, these limitations become more pronounced. The current safety reporting for FTA Section 5311, Formula Grants for Rural Areas requires only aggregated reporting by the funding recipients (state DOTs) on behalf of their sub-recipients, unless the recipient allows self-reporting for those sub-recipients. Rural reporters must report total reportable events and the total number of fatalities and injuries associated with those events.[95] No additional NTD information is required from these reporters; therefore, identifying causal or contributing factors in rural paratransit and demand response collision events is more challenging than for urban providers. Due to these data limitations, the crashworthiness of transit buses operating in rural areas as a contributor to injuries or fatalities sustained in transit collisions cannot be determined or inferred.

A significant challenge in proving the need for increased safety standards for cutaway vehicles lies in current data collection methods. Paratransit cutaway vehicles are often categorized into other general bus categories in overall crash statistics, leading to scarce and inconsistent data for analysis of cutaway bus collisions.[96] For example, per FMVSS, a bus can be classified as either a school bus or "other type of bus" with no exceptional treatment for paratransit body-on-chassis.[97] Additionally, these types of vehicles are often operating in rural

[94]Analysis of FTA Statistical Summaries, "Vehicle Purchases by Type of Vehicle, Program, Population," 2011–2015, https://www.transit.dot.gov/funding/grants/fy-2015-statistical-summary.
[95]Federal Transit Administration, *2017 NTD Policy Manual*, https://www.transit.dot.gov/sites/fta.dot.gov/files/docs/ntd/57981/2017-ntd-policy-manual1-1.pdf.
[96]Kwasniewski et al. (2009), "Crash and Safety Assessment Program for Paratransit Buses," *op. cit.*
[97]*Ibid.*

environments on two-lane highways with higher traveling speeds, contributing to the need for their inclusion in national safety standards.

Unfortunately, NTD is not the only data source that does not classify paratransit, or cutaway vehicles, as a separate variable. The fact that cutaway-specific data are not available is not reason enough to preclude that type of vehicle from safety standards. A significant portion of the trips provided by recipients of FTA Section 5311 grant funds are performed using these body-on-chassis or cutaway vehicles, and accident data from these recipients would be useful. FHWA produces an annual Highway Statistics Series in which vehicle miles of travel (VMT) are estimated by vehicle type and urban or rural classification using State-reported highway performance and monitoring system data. The series report data associated with a vehicle type defined as "bus," but there is no distinction between the different types of buses.

Nationally, bus miles represented approximately 37% of all miles traveled on rural roads between 2011 and 2015.[98] Often, buses that operate in small urban or rural areas are cutaway vehicles.[99] The share of travel on rural roads is important when considering safety factors associated with travel. According to NHTSA, rural roads consistently have more annual fatalities than urban roads and higher fatality rates per 100 million miles traveled compared to urban roads.[100] Some rural roadway characteristics that lead to the increased danger are increased speed limits and two-lane undivided roadway design. Although only 19% of the U.S. population lives in rural areas, 30% of all VMT occurs on rural roadways, and, as of 2015, 53% of all motor vehicle fatalities occurred on rural roadways. The disproportionate share of fatalities is correlated to the likelihood of increased severity in collisions coupled with the increased emergency response time associated with rural areas.[101] Crashes that occur in rural areas have increased notification, response, and transport times.[102] Not only are rural crashes reported an average of 2.3 minutes later than urban crashes, but the average response time is 5.4 minutes longer, and the transport time is an average of 13 minutes longer for a patient to reach the hospital.[103] Additionally, the share of passengers fatally injured due to rollovers accounted for 39% of all rural passenger vehicle occupants killed, whereas rollovers in urban areas only accounted for 24% of urban passenger occupants killed.[104]

---

[98]Analysis of FHWA Highway Statistics Series data for 2011–2015, https://www.fhwa.dot.gov/policyinformation/statistics.cfm.
[99]http://www.regionalserviceplanning.org/coordination/documents/white_papers/transit_vehicles_02-2007.pdf.
[100]https://crashstats.nhtsa.dot.gov/Api/Public/ViewPublication/812181.
[101]http://injuryprevention.bmj.com/content/11/1/24.
[102]https://journals.sagepub.com/doi/pdf/10.3141/2635-07.
[103]*Ibid.*
[104]https://crashstats.nhtsa.dot.gov/Api/Public/ViewPublication/812181.

State of Transit Bus Safety in the U.S. (2014) evaluated the safety of public transit bus services in both rural and urban environments between 2008 and 2012. The report emphasized that consideration should be given to the size and capacity of the vehicle types in operation, when evaluating the safety of rural transit operations. The report also reiterates NHTSA data on increased emergency medical response time, revealing that it may take up to an hour for medical assistance to arrive in some rural areas.

Paratransit body-on-chassis vehicles account for a significant share, with more than one of every three buses purchased with FTA grant funds and nearly one in every four bus miles operated in a rural environment. Crashworthiness of body-on-chassis buses must be considered to ensure that a holistic approach is used to address public transit safety concerns. National safety statistics highlight additional challenges associated with rural operating environments, such as higher operating speeds on undivided and/or unpaved roadways combined with longer response times for emergency personnel, and lead to a greater likelihood of increased severity when collisions occur. The research suggests that bus crashworthiness and vehicle structural testing standards can mitigate the rural characteristics that lead to increased risks for agencies operating in rural environments.

SECTION

6

Conclusions

Transit Bus Crashworthiness/CEM Standards

Although public transportation is one of the safest modes of travel, the transit industry should consider crashworthiness standards for all types of transit buses to ensure the safety of occupants and operators. Collisions are a major challenge and result in high damage, injury, and public perception costs. The data analysis performed as part of this evaluation and the review of relevant research demonstrate that there are opportunities to improve bus crashworthiness standards.

Bus crashworthiness standards requirements exist at U.S. state levels but, internationally (Australia, UNECE), many standard applicability restrictions exclude typical transit buses. Additionally, many occupant protection standards are limited to vehicle operators only, thereby leaving passengers vulnerable. The FMVSS 200 series focuses on several aspects of crashworthiness, but § 571.201, "Occupant protection in interior impact" is applicable only to vehicles that weigh less than 10,000 lb. Unfortunately, nearly every transit bus, including the smaller cutaway style vehicles used for paratransit, exceed 10,000 GVWR. Other FMVSS standards are applicable only to drivers, including § 571.207, "Seating systems"; § 571.208, "Occupant crash protection"; § 571.209, "Seatbelt assemblies"; and § 571.210, "Seatbelt assembly anchorages." Existing, applicable FMVSS mass transit bus safety standards are §5 71.204 "Steering control rearward displacement"; § 571.205, "Glazing materials"; § 571.213 "Child restraint systems"; § 571.217 "Bus emergency exits and window retention and release"; and §571.302, "Flammability of interior materials."

In addition to U.S. FMVSS standards, U.S. states that call for federal standards to apply to additional vehicles, thus removing the weight applicability restrictions, include Florida, Wisconsin, and Minnesota. Florida is taking an active role in implementing stringent cutaway standards by requiring testing of all paratransit buses to withstand side-impact and rollover scenarios. Details of the required test results can be found in Section 4 for paratransit body-on-chassis and in Appendix A. Other standards are noted throughout the report and also are presented in Appendix B.

UNECE issued several bus crashworthiness standards that are applicable to transit buses, including for safety belts and their anchorages and for child restraint systems, seat and seat anchorage strength, head restraints, prevention of fire risk, glazing materials, and superstructure strength specifically due to

a rollover event. Details of each UNECE standard are provided in Section 3, "Existing Bus Crashworthiness Standards" and are highlighted in Appendix B.

ADR standards related to crashworthiness and applicable to transit buses include seats, seat anchorages, child restraints, seatbelts, glazing materials, and rollover protection. Similar to UNECE standards, ADR standards also are detailed in Section 3 and highlighted in Appendix B.

When determining the crashworthiness of a bus, it is important to consider both the structural integrity of the vehicle and the contributing factors that lead to secondary impacts in the event of a collision. Standards should address not only the residual space that remains following a collision, but also the design of the seats, seatbelts, headrests, and window glazing to reduce the likelihood of secondary impacts for passengers and drivers.

The GVWR for body-on-chassis vehicles often exceeds the 10,000-lb weight limit threshold for 49 CFR 571.200 applicability. Additionally, the two-part assembly of a cutaway vehicle provides opportunity for construction inconsistencies, resulting in crashworthiness and structural integrity vulnerabilities.[105] Additionally, body-on-chassis cutaway vehicles often operate in environments that are more dangerous due to increased speeds and rural roadway designs.

In cases in which crashworthiness standards do not agree among regulating entities, studies have been performed to determine which standard is most appropriate. The rollover/superstructure strength tests that differ are the FMVSS 216/220 (roof crush resistance school bus rollover protection) standards and the UNECE R-66 (superstructure strength) standard. The FMVSS standard is based on a quasi-static test, and the UNECE R-66 replicates rollover conditions using a quasi-static lateral tilting test. Consensus among most researchers who performed these comparative analyses was that the UNECE test is more stringent and should be the standard for rollover strength.

Another standard that is inconsistent across regulating geography is the side-impact standard. The main discrepancy in the side-impact standard is the height and weight of the sled test MDB. The FMVSS testing standard is less stringent from the perspective of bumper height from ground (based on typical passenger car bumper height) and weight of MDB than the IIHS testing protocols. For each of these testing standards, an MDB more representative of truck or SUV characteristics is used due to the increased proportion of personal vehicles on the roadway that are larger vehicles.

[105] Kwasniewski et al., "Crash and Safety Assessment Program for Paratransit Buses," *op. cit.*

Investigation Reports and Supporting Research

Several NTSB recommendations advocate improved crashworthiness of mass transit bus vehicles, including removing the weight applicability restrictions for several standards; developing standards for frontal, side, rear, and rollover collisions; requiring manufacturers to comply with newly-developed occupant crash protection standards; and increasing roof strength standards.[106] NTSB recognizes that medium-size buses, regardless of weight, operate in a manner similar to motorcoaches and, as such, should be held to similarly stringent standards.[107] Several NTSB accident investigation reports (see summaries in the "NTSB Investigations" section) identify loss of survivable space and intrusions into passenger cabins of over-the-road buses as contributing to injuries and fatalities. Many accidents, including the 2009 Dolan Springs accident, involved a cutaway vehicle such as those currently used in U.S. paratransit and rural public transportation services. Following the Davis semi-tractor truck /medium-size bus collision, NTSB indicated that "medium-size buses, regardless of weight, operate in a manner similar to motorcoaches." NTSB established that motorcoach occupant protection standards could improve the crashworthiness of vehicles used in motorcoach services, including purpose-built motorcoaches and medium-size buses (including cutaway vehicles).

Data and Gap Analysis Summary

NTD data were examined to determine if the need for national crashworthiness standards for transit buses is warranted. The evaluation and literature review provided insufficient evidence that crashworthiness standards be mandatory for transit buses over 40 ft in length, including articulated and BRT buses. These transit buses are often used in urban environments where the risk of rollover events and high-speed collisions is minimal. However, paratransit buses comprise a significant share of the total national transit bus fleet, with transit buses less than 30 ft in length representing more than 34% of the buses purchased using FTA grant funds during 2011–2015. In many instances, paratransit body-on-chassis transit vehicles operate in very different environments than purpose-built transit buses, with many vehicle miles recorded in rural areas or on trips with longer durations and at higher rates of speed. Although there are no NTD data to support the need for crashworthiness standards for these vehicles, there is supplemental information from NTSB investigation reports and other research that supports implementation of existing rollover, side-impact, and secondary impact standards.

---

[106] "NHTSA's Approach to Motorcoach Safety" (2007), https://www.nhtsa.gov/DOT/NHTSA/Vehicle%20Safety/Articles/Associated%20Files/481217.pdf.

[107] https://www.ntsb.gov/investigations/AccidentReports/Reports/HAR1503.pdf.

Nationally, bus miles traveled on rural roads represented approximately 35% of all bus miles traveled in 2016 and 2017.[108] Often, the type of bus that operates in these small urban or rural areas is a cutaway vehicle.[109] Rural roads consistently account for more annual fatalities and higher fatality rates per 100 million miles traveled compared to urban roads.[110] Although only 19% of the U.S. population lives in rural areas, 30% of all bus transit VMT occurs on rural roadways, and as of 2015, 53% of all motor vehicle fatalities occurred on rural roadways. The disproportionate share of rural fatalities is due to the likelihood of increased collision severities coupled with increased emergency response times.[111] Additionally, rollovers accounted for 39% of rural passenger fatalities but only 24% of urban passenger deaths.[112]

Although the availability of rural paratransit vehicle collision event data is scarce, there is support for use of crashworthiness standards because these vehicles represent a high percent of all non-rail transit vehicles purchased with FTA funds. Cutaway buses are at an increased risk because of rural highway designs and longer trips. This research indicates that crashworthiness standards for body-on-chassis buses are needed to standardize construction/assembly requirements and improve crashworthiness to satisfy both urban and rural operational regimes. Examination of existing FMVSS requirements, State regulations/laws, and international crashworthiness standards establishes that the adoption may lead to improved passenger and operator safety and less fatalities/injuries.

[108]Analysis of FHWA Statistics Series data 2011–2015, https://www.fhwa.dot.gov/policyinformation/statistics/2017/vm1.cfm.
[109]http://www.regionalserviceplanning.org/coordination/documents/white_papers/transit_vehicles_02-2007.pdf.
[110]https://crashstats.nhtsa.dot.gov/Api/Public/ViewPublication/812181.
[111]http://injuryprevention.bmj.com/content/11/1/24.
[112]https://crashstats.nhtsa.dot.gov/Api/Public/ViewPublication/812181.

SECTION

7

Findings

- **Finding 1**: There are existing crashworthiness/CEM standards that can be used for 40-ft or longer bus new vehicle procurements.
- **Finding 2:** As part of new or rehabilitation procurements, designs can include improved secondary impact designs that reduce injuries and fatalities. Passenger seating devices, attachments and tracking/anchorages, and seatback designs can be optimized to consider secondary impact collisions.
- **Finding 3:** Tailoring body-on-chassis cutaway vehicle procurement criteria to include roll-over testing standards may improve crashworthiness for these types of vehicles.

APPENDIX

A

Florida Standard for Paratransit Buses

Pre-Qualification Structural Testing for Cutaway Buses Acquired by the State of Florida

1. Scope

Pre-Qualification Structural Testing for Cutaway Buses Acquired by the State of Florida (PRE-QUAL) applies to all cutaway type vehicles procured through FDOT contracts that have not undergone the Rollover Crashworthiness Assessment for Cutaway Buses Acquired by the State of Florida (FL-STANDARD).

2. Purpose

The purpose of the PRE-QUAL tests is to ensure that all cutaway buses acquired through FDOT contracts have a minimum level of structural integrity. PRE-QUAL results do not predict performance on the FL-STANDARD.

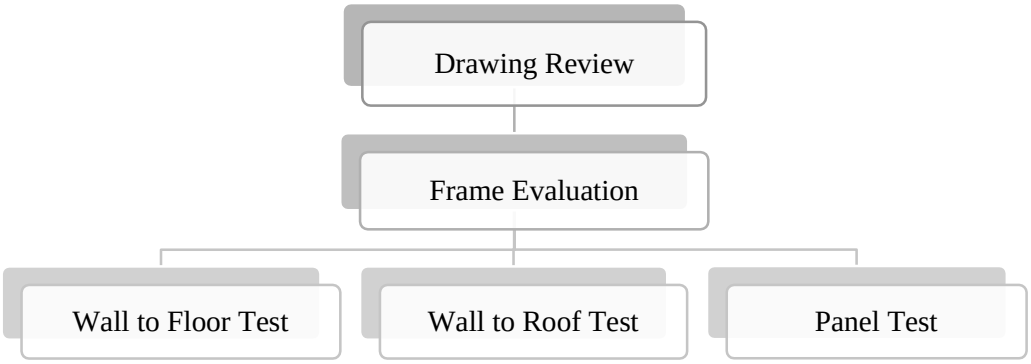

Figure 1: PRE-QUAL Testing Hierarchy

3. Approval

The PRE-QUAL process consists of five requirements as shown in Figure 1. All requirements must be successfully passed before a manufacturer is considered Pre-Qualified, after which FDOT will grant the manufacturer a Temporary Waiver Contract. The PRE-QUAL process must be completed prior to first build; no buses will be built until satisfactory results are obtained. The PRE-QUAL process is intended to be completed in 90 days. This time period assumes prompt supply of all required test materials by the manufacturer.

4. Requirements

More detailed descriptions of the required approval procedures may be found in the PRE-QUAL Test Procedure. The Test Procedure will be available September 2015.

4.1. Drawing Review – The manufacturer will be required to provide complete assembly drawings of the passenger compartment frame for evaluation. The drawings must include a detailed description of all structural connections.

4.2. Frame Evaluation – The manufacturer will be required to provide a passenger compartment frame consisting of only structural tubing that includes the entry stairwell and front cap (if the flooring material is an integral part of the floor to wall connection it should also be included) and one skinned sidewall panel. The frame and sidewall panel should be constructed using normal

production methods. These components will be delivered to FDOT Springhill Road Bus Testing Facility in Tallahassee, FL.

4.2.1 The provided frame will be compared with the assembly drawings. The frame will fail the evaluation if it is inconsistent with the previously provided assembly drawings or found not representative of normal production.

4.3. Wall to Floor (WF) Connection Test – The WF test is conducted to assess the strength of the sidewall to floor connection. In this test the floor portion of the test panel is fixed, and a force is then slowly applied to the sidewall portion. The applied load and the resulting rotation about the connection will be recorded simultaneously during the test. The energy required to rotate the sidewall through 16.7 deg. is then calculated and compared to the required threshold value. To account for different column spacing (and thus total number of columns in the frame), the threshold values are relative to the typical longitudinal distance between adjacent columns in the passenger compartment frame.

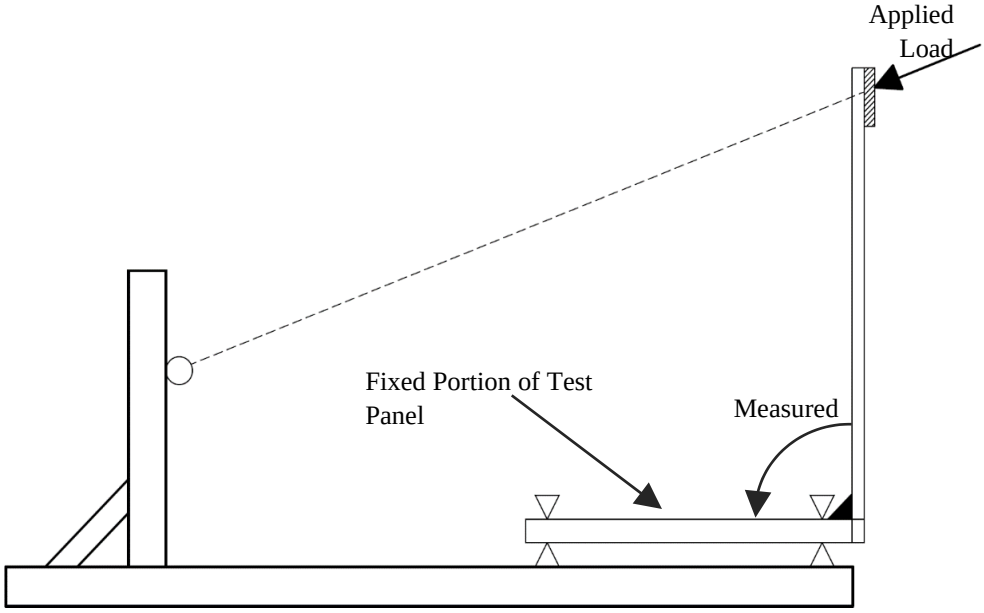

Figure 2: PRE-QUAL Connection Test

4.3.1 The test panel will include two adjacent sidewall columns plus 150mm to each side measured from the outside column face.

4.3.2. Application of loading may be in either direction (either towards or away from the inside face of the column).

4.3.3. A minimum of three WF connections cut from the provided body cage will be tested.

4.4. Wall to Roof (WR) Connection Test – The WR test is conducted to assess the strength of the sidewall to roof connection. In this test the roof portion of the test panel is fixed, and a force is then slowly applied to the sidewall portion. The applied load and the resulting rotation about the connection will be recorded simultaneously during the test. The energy required to rotate the sidewall through 23.0 deg. is then calculated and compared to the required threshold value. To account for different column spacing (and thus total number of columns in the frame), the

threshold values are relative to the typical longitudinal distance between adjacent columns in the passenger compartment frame.

4.4.1 The test panel will include two adjacent sidewall columns plus 150mm to each side measured from the outside column face.

4.4.2. Application of loading may be in either direction (either towards or away from the inside face of the column).

4.4.3. A minimum of three WR connections cut from the provided body cage will be tested.

4.5. Sidewall Panel Test – The Panel Impact test uses an impact hammer to dynamically deliver a calculated amount of kinetic energy to the test panel, as shown in Figure 3. The test energy is scaled according to the typical panel width of the passenger compartment (longitudinal distance between two adjacent columns). The resulting maximum permanent panel deflection is then measured after impact and compared to the threshold value.

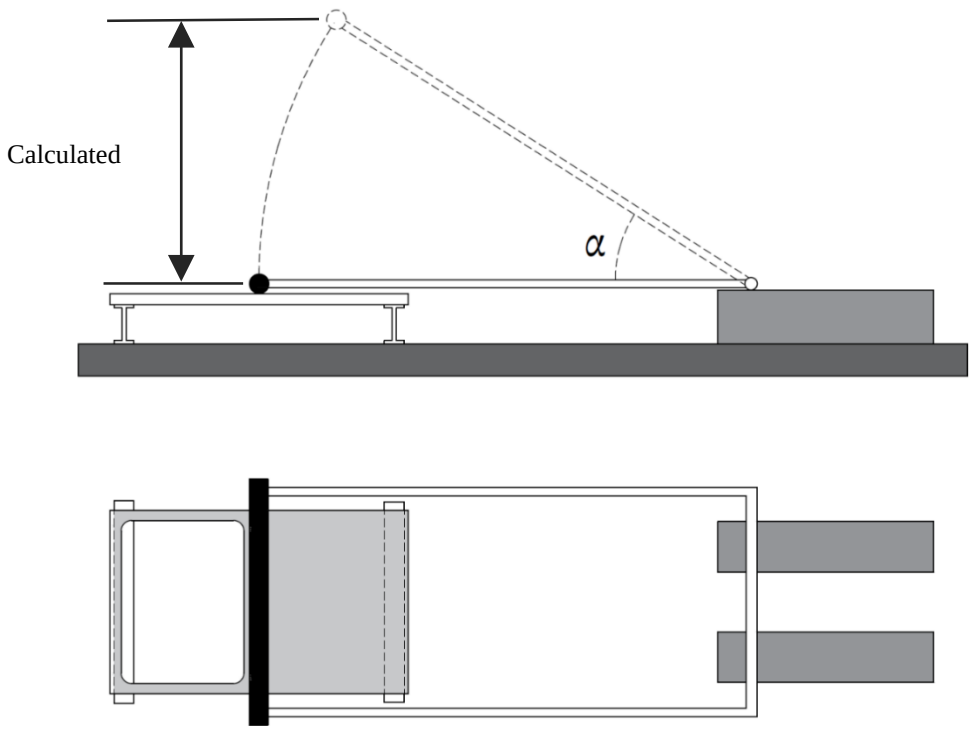

Figure 3: PRE-QUAL Sidewall Panel Test

4.5.1. The test panel will include two adjacent sidewall columns (plus 150mm of the sidewall structure on each side measured from the outside column face in the case of a continuous waistrail).

4.5.2. A minimum of two panels cut from the skinned sidewall will be tested.

4.5.3. The impact will be to the exterior side of the panel.

4.5.3. The hammer will be raised to the height calculated to deliver the required kinetic energy at initial impact with the test panel surface. It will then be cleanly released and allowed to fall under only the force of gravity until it impacts the test panel.

4.6 Required Test Thresholds – The WF, WR, and Panel Test will each be considered "passed" if the average result of the tested samples from each test meets the requirements given in Table 1.

Table 1: PRE-QUAL Required Test Thresholds

Test	Required Threshold
Wall to Floor (WF)	≥ 300 J of energy (per meter of panel width) required to rotate the connection 16.7 degrees
Wall to Roof (WR)	≥ 450 J of energy (per meter of panel width) required to rotate the connection 23.0 degrees
Panel Test	≤ 150 mm permanent deflection after impact with 600 J of kinetic energy (per meter of panel width)

5. PRE-QUAL Star Rating

In addition to pass or fail, the tested passenger compartment frame may earn up to five stars (*) as part of the FDOT PRE-QUAL Testing Star Rating (see Exhibit 12 - Star Rating Guidelines). Stars will be awarded as shown in Table 2 using the average result for each test.

Table 2: PRE-QUAL Star Rating

Rating	Test	Required Threshold
*	Wall to Floor (WF)	≥ 375 J of energy (per meter of panel width) required to rotate the connection 16.7 degrees
**	Wall to Floor (WF)	≥ 450 J of energy (per meter of panel width) required to rotate the connection 16.7 degrees
*	Wall to Roof (WR)	≥ 560 J of energy (per meter of panel width) required to rotate the connection 23.0 degrees
**	Wall to Roof (WR)	≥ 670 J of energy (per meter of panel width) required to rotate the connection 23.0 degrees
*	Panel Test	≤ 100 mm permanent deflection after impact with 600 J of kinetic energy (per meter of panel width)

6. Disclaimer

Neither the Crashworthiness and Impact Analysis Laboratory of the FAMU-FSU College of Engineering, its faculty, Florida State University, Florida A&M University, and their respective Boards of Trustees, nor the Florida Department of Transportation make any warranty, express or implied, as to the accuracy, quality, or usefulness of the information contained in this publication for any purpose. In no event will FAMU-FSU College of Engineering, Florida State University, Florida A & M University, their respective Boards of Trustees, nor the Florida Department of Transportation be liable for any direct, indirect, punitive, incidental, special, consequential damages, or any damages whatsoever arising out of or connected with the use or misuse of this document. The parties do not warrant that the prescribed tests and calculations are sufficient to guarantee safety or structural integrity of any vehicle in an actual collision.

Rollover Crashworthiness Assessment for Cutaway Buses Acquired by the State of Florida

1. Scope

The Rollover Crashworthiness Assessment for Cutaway Buses Acquired by the State of Florida (FL-STANDARD) applies to all cutaway-type buses procured through FDOT TRIPS (Transit- Research-Inspection-Procurement Services) contracts. It establishes the procedures and performance criteria for assessment of rollover crashworthiness.

2. Purpose

The purpose of this Standard is to reduce death and injuries resulting from the collapse of the cutaway bus passenger compartment during rollover accidents.

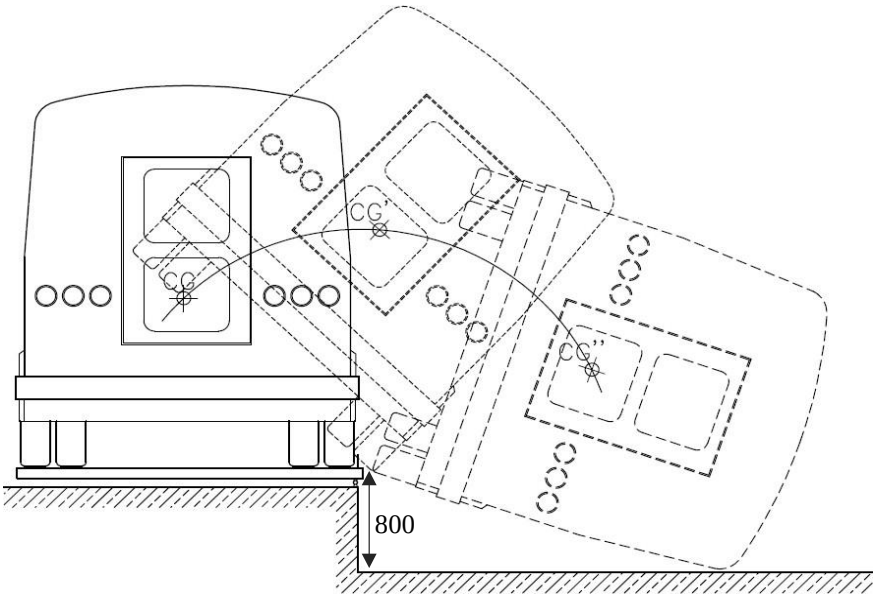

Figure 1: FL-STANDARD Rollover Test

3. Approval

Approval under the FL-STANDARD consists of pre-test, test, and post-test requirements. The approval process is initiated by the manufacturer though Request for Approval. The request is followed by a Rollover Test of a cutaway bus (Figure 1). Successful completion of the Rollover Test grants approval. Approval is then maintained through meeting the Modification of Approval and Conformity of Production requirements.

4. Requirements

More detailed descriptions of the required approval procedures may be found in the FL- STANDARD Test Procedure.

4.1 Request for Approval - The request for approval will be submitted by the vehicle manufacturer to FDOT.

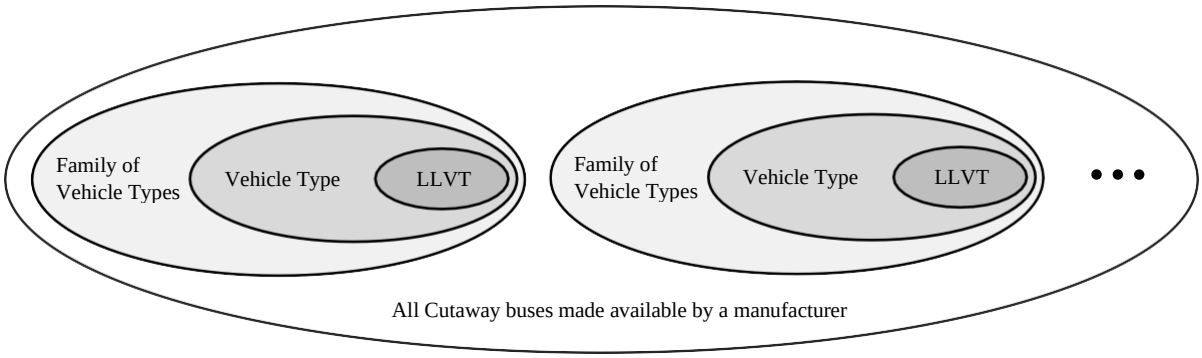

Figure 2: Relationship between the required bus categories.

4.1.1. The manufacturer must categorize their available cutaway vehicles into Vehicle Types. A Vehicle Type is a cutaway bus produced with the same design technical specification, main dimensions, and structural arrangement. For example, a 22 ft. 138" WB bus, a 24 ft. 158" WB bus, and a 26 ft. 176" WB bus would be three different vehicle types, while two 22 ft. 158" WB buses with different interior configurations would be considered a single vehicle type.

4.1.2. For all declared Vehicle Types, the manufacturer will provide the following information to FDOT:

a) Descriptions and dimensioned drawings of the passenger compartment and chassis.
b) The unloaded mass of the vehicle and the associated axle loads.
c) The exact position of the unloaded vehicle's center of gravity (including height).

4.1.3. At the request of FDOT, a complete vehicle will be presented to check its unloaded mass, axle loads, position of the center of gravity, and all other data and information related to the Vehicle Type definition.

4.1.4. The manufacturer must categorize the submitted vehicle types into Family of Vehicle Types. A Family of Vehicle Types is a collection of Vehicle Types in which the design of the passenger compartment frame is similar enough for them to be considered together as a group for the purposes of this Standard.

For each Family of Vehicle Types, FDOT will determine the Vehicle Type least likely to meet the requirements of this Standard using the method described in the Test Procedure. This determination is made primarily by using the loaded vehicle mass and the COG location to find the Vehicle Type that will have the greatest amount of test energy. The Least Likely Vehicle Type (LLVT) will then be considered representative of the Family of Vehicle Types for the purposes of this Standard.

4.2. <u>Rollover Test</u> – The Rollover Test will be conducted by FDOT.

4.2.1. The manufacturer will build the LLVT passenger compartment onto a suitable chassis. A used chassis with a model year ≤ 12 years from the date of test is allowed in place of a new cutaway chassis.

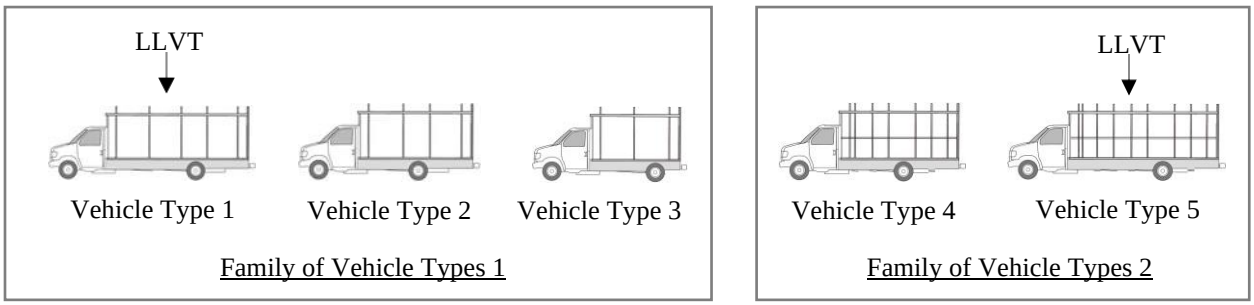

Figure 3: Example of required bus categorization showing five vehicle types split into two families due to structural differences, and the LLVT chosen from each family.

4.2.2. The LLVT test bus must be built using normal production methods to the submitted Vehicle Type design specification. All structural and high mass items must be included; however, all parts do not need to be new, cosmetically perfect, or (in some cases) operational. Non-structural or low mass items can be omitted. The FL-STANDARD Test Procedure contains more detailed test bus build requirements and guidelines.

4.2.3. The LLVT test bus will be transported to the FDOT Springhill Bus Testing Facility in Tallahassee, FL.

4.2.4. The Rollover Test is conducted by placing the prepared LLVT on a tilt table that is 800 mm above a smooth and level concrete surface, as illustrated in Figure 1. One side of the tilt table is raised until the vehicle becomes unstable, rolls off the platform, and impacts the concrete surface below. The rollover test will be carried out on that side of the vehicle that is determined to be most vulnerable.

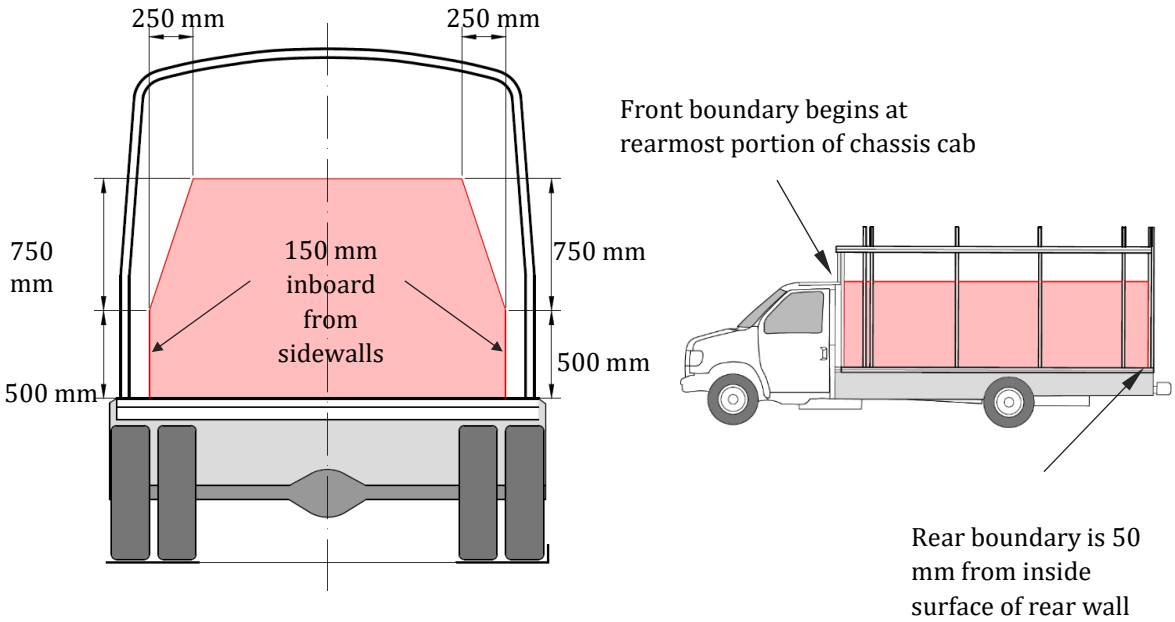

Figure 4: FL-STANDARD Survival Space.

Performance on the FL-STANDARD is evaluated using the concept of Survival Space. The Survival Space is a three-dimensional volume defined within the passenger compartment, as shown in Figure 4. The Survival Space begins at the rearmost portion of the chassis cab and ends 50 mm from the inside surface of the passenger compartment rear wall. The outer boundary of the survival space at any transverse cross section between or at the front and rear boundaries is defined by the following symmetric polygon:

a) Segment 1 extends vertically from the floor to an end point that is 500 mm above the floor and 150 mm inboard of the side wall;
b) Segment 2 starts at the end point of Segment 1. The end point of Segment 2 is 750 mm vertically above and 250 mm horizontally inboard of the end point of Segment 1.
c) Segment 3 is a horizontal line that starts at the end point of Segment 2 and ends at the vertical longitudinal center plane of the vehicle.

4.2.5. In order for approval to be granted, the passenger compartment frame of the vehicle must have sufficient strength to ensure that no part of the vehicle outside the survival space at the start of the test will intrude into the survival space at any time during the test. Any structural parts originally within the survival space will be ignored when evaluating the intrusion into the survival space.

4.2.6. Each anchorage of all vehicle seats and other permanently fastened interior items (if present) will not completely separate from its mounting structure during at any time during the rollover test.

4.2.7. After the vehicle comes to rest on the impact surface and while still resting on its side, each roof and rear emergency exit of the vehicle will be capable of releasing and opening with a force of not more than 60 pounds applied perpendicular to the door surface.

4.3. <u>Modification of Approval</u>

4.3.1 Every proposed modification of an approved Vehicle Type by the manufacturer will be submitted to FDOT, which will proceed with one of the three following courses of action:

a) Agree that the modifications made are unlikely to have any negative effect on rollover crashworthiness and that the modified vehicle type still complies with the requirements of this Standard.
b) Require a further test report to prove that the modified vehicle type complies with the requirements of this Standard.
c) Refuse the extension of approval and require a new approval procedure to be carried out.

4.3.2. The decision of FDOT, in cooperation with the manufacturer, will be based on an evaluation of how the proposed changes will affect the Vehicle Type's rollover crashworthiness.

4.4. Conformity of Production

4.4.1. Every vehicle manufactured under this Standard will conform to an approved Vehicle Type.

4.4.2. The normal frequency of inspections authorized by FDOT to check conformity will be once every year. If non-conformity is discovered in the course of one of these visits, FDOT may increase the visit frequency to re-establish the conformity of production as rapidly as possible.

4.4.3. The approval granted in respect of a Vehicle Type pursuant to this standard may be withdrawn if the requirements specified in this section are not complied with.

5. Disclaimer

This specification is extracted from, and is consistent with, bus safety standards as required by the referenced U.S., U.N., and E.U. regulations as of the date of release of this Revision.

Neither the Crashworthiness and Impact Analysis Laboratory of the FAMU-FSU College of Engineering, its faculty, Florida State University, Florida A&M University, and their respective Boards of Trustees, nor the Florida Department of Transportation make any warranty, express or implied, as to the accuracy, quality, or usefulness of the information contained in this publication for any purpose. In no event shall FAMU-FSU College of Engineering, Florida State University, Florida A & M University, their respective Boards of Trustees, or the Florida Department of Transportation be liable for any direct, indirect, punitive, incidental, special, or consequential damages, or any damages whatsoever arising out of or connected with the use or misuse of this document. The parties do not warrant that the prescribed tests and calculations are sufficient to establish the safety or structural integrity of any vehicle in an actual collision.

APPENDIX

B

Current Bus Crashworthiness Standards

Table B-1

Current Bus Crashworthiness Standards

Geography	Type of Rule	Document	Title	Applicability	Target (crashworthiness related)	Link
US (FMVSS)	Regulation	49 CFR 571.204	Steering control rearward displacement	Transit Bus	Operator safety	http://www.ecfr.gov/cgi-bin/retrieveECFR?gp=&SID=bc402070bf156ce6b5d4b2bd7c375da7&mc=true&n=pt49.6.571&r=PART&ty=HTML#se49.6.571_1204
US	Regulation	49 CFR 571.205	Glazing materials	Transit Bus	Occupant ejection	
US	Regulation	49 CFR 571.213	Child restraint systems	Transit Bus	Built-in restraints	
US	Regulation	49 CFR 571.217	Bus emergency exits and window retention and release	Transit Bus	Occupant ejection	
US	Regulation	49 CFR 571.302	Flammability of interior materials	Transit Bus	Vehicle fires	
US	Regulation	49 CFR 571.207	Seating systems	Transit Bus - Operator only	Seat failure	
US	Regulation	49 CFR 571.208	Occupant crash protection	Transit Bus - Operator only	Forces on crash dummies	
US	Regulation	49 CFR 571.209	Seatbelt assemblies	Transit Bus - Operator only	Operator safety	
US	Regulation	49 CFR 571.210	Seatbelt assembly anchorages	Transit Bus - Operator only	Operator safety	
US	Regulation	49 CFR 571.216	Roof crush resistance	Bus with GVWR < 10,000 lb	Rollover	
US	Regulation	49 CFR 571.220	School bus rollover protection	School Bus	Rollover	

Table B-1 (cont.)

Current Bus Crashworthiness Standards

Geography	Type of Rule	Document	Title	Applicability	Target (crashworthiness related)	Link
UNECE	Regulation	R-14	Safety-belt anchorages, ISOFIX anchorages systems, and ISOFIX top tether anchorages	M3 are vehicles with more than eight passenger seats and a mass exceeding 5,000 kg (11,023 lb)	Seat belts	http://www.unece.org/fileadmin/DAM/trans/main/wp29/wp29resolutions/ECE-TRANS-WP29-78-r4e.pdf
UNECE	Regulation	R-16	Safety-belts, restraint systems, child restraint systems and ISOFIX child restraint systems	M_3	Seat belts	https://www.unece.org/fileadmin/DAM/trans/main/wp29/wp29regs/2015/R016r8.pdf
UNECE	Regulation	R-17	Seats, their anchorages and any head restraints, and prohibits side-facing seats.	M3 vehicles that are not covered in UNECE R-80	Seat failure	https://www.unece.org/fileadmin/DAM/trans/main/wp29/wp29regs/2015/R017r5e.pdf
UNECE	Regulation	R-25	Head restraints (headrests)	M_3	Secondary injury	https://www.unece.org/fileadmin/DAM/trans/main/wp29/wp29regs/r025r1e.pdf
UNECE	Regulation	R-34	Prevention of fire risks	M_3	Collision related testing	https://www.unece.org/fileadmin/DAM/trans/main/wp29/wp29regs/2015/R034r3e.pdf
UNECE	Regulation	R-36	General construction of large passenger vehicles	M_3	Load distribution requirements, minimum area available for passengers, and maximum passenger capacity	https://www.unece.org/fileadmin/DAM/trans/main/wp29/wp29regs/r036r3e.pdf
UNECE	Regulation	R-43	Glazing materials	M_3	Occupant ejection	https://www.unece.org/fileadmin/DAM/trans/main/wp29/wp29regs/R043r3e.pdf
UNECE	Regulation	R-66	Superstructure Strength	M_3	Rollover	https://www.unece.org/fileadmin/DAM/trans/main/wp29/wp29regs/r066r1e.pdf
UNECE	Regulation	R-80	Strength of seats and their anchorages	M_3	Seat failure	https://www.unece.org/fileadmin/DAM/trans/main/wp29/wp29regs/R080r1e.pdf

Table B-1 (cont.)

Current Bus Crashworthiness Standards

Geography	Type of Rule	Document	Title	Applicability	Target (crashworthiness related)	Link
UNECE	Regulation	R-114	Airbag replacement	M_3	Operator safety	https://www.unece.org/fileadmin/DAM/trans/main/wp29/wp29regs/r114e.pdf
UNECE	Regulation	R-135	Pole Side Impact performance	M_2 are vehicles with more than eight passenger seats and a maximum mass not exceeding 5,000 kgs. (11,023 lbs.)	Forces on crash dummies	https://www.unece.org/fileadmin/DAM/trans/main/wp29/wp29regs/2016/R135r1e.pdf
ADR	Standards	3/03	Seats and seat anchorages	ME - Heavy Omnibus - an omnibus with a Gross Vehicle Mass exceeding 5,000 kgs. (11,023 lbs.)	Seat failure	https://infrastructure.gov.au/roads/motor/design/files/ADR_Applicability_Summary-M-Group.pdf
ADR	Standards	4/05	Seatbelts	ME	Seat belts	https://www.legislation.gov.au/Details/F2014C00230
ADR	Standards	5/05	Anchorages for seatbelts	ME	restraint failure	https://www.legislation.gov.au/Details/F2009C00157
ADR	Standards	8/01	Safety glazing material	ME	Occupant ejection	https://www.legislation.gov.au/Details/F2015C00542
ADR	Standards	34/02	Child restraint anchorages and child restraint anchor fittings	ME	restraint failure	https://www.legislation.gov.au/Details/F2012L00703
ADR	Standards	42/04	General safety requirements	ME	External or internal protrusions	https://www.legislation.gov.au/Details/F2016C00153
ADR	Standards	59/00	Standards for omnibus rollover strength	ME	Rollover	https://www.legislation.gov.au/Details/F2012C00535
ADR	Standards	68/00	Occupant protection in buses	ME	Seat performance	https://www.legislation.gov.au/Details/F2006L01454

Table B-1 (cont.)

Current Bus Crashworthiness Standards

Geography	Type of Rule	Document	Title	Applicability	Target (crashworthiness related)	Link
Florida	Rule	§ 14-90.007(1)(b) F.A.C.	Structural integrity	Bus procured through Florida's Transit Research Inspection Procurement Services Program (TRIPS)	CEM	http://www.flrules.org/gateway/ruleno.asp?id=14-90.007&Section=0
Florida	Rule	§ 14-90.007(1)(c) F.A.C.	Compliance with FMVSS 49 CFR 571 sections 207, 209, 210, 217, and 302 are at least partially related to vehicle crashworthiness (shown above)	Bus procured through TRIPS Program	Seating systems, seat belt assembly, seat belt anchorages, emergency exits and window retention release, and flammability of interior materials	
Florida	Rule	§ 14-90.007(8) F.A.C.	Emergency Exits	Bus procured through TRIPS Program	Emergency evacuation	
Florida	Rule	§ 14-90.007(12) F.A.C.	Seatbelts	Bus procured through TRIPS Program	Operator safety	
Minnesota	Rule	Minnesota Administrative Rules Chapter 8840.5940 § (1)	Rollover Protection	All vans and buses	Rollover	https://www.revisor.mn.gov/rules?id=8840.5940&keyword_type=all&keyword=bus rules?id=8840.5940&keyword_type=all&keyword=bus
Wisconsin	Rule	Wisconsin Administrative Code Chapter Trans 330.10 (12)	Equipment requirements and standards (Frame)	Motor bus	The frame shall conform to the requirements under 49 CFR 393.201	https://docs.legis.wisconsin.gov/code/admin_code/trans/330
Wisconsin	Rule	Wisconsin Administrative Code Chapter Trans 330.10 (20)	Equipment requirements and standards (Seating)	Motor bus	Seat performance	

Table B-1 (cont.)

Current Bus Crashworthiness Standards

Geography	Type of Rule	Document	Title	Applicability	Target (crashworthiness related)	Link
Wisconsin	Rule	Wisconsin Administrative Code Chapter Trans 330.10 (30)	Equipment requirements and standards (Windows and windshields)	Motor bus	Compliance with 49 CFR 571.217	
APTA	Guidelines	Procurement Guidelines Section 6: TS 23.2	Crashworthiness	Transit Coach	Performance guidelines	http://www.apta.com/resources/reportsandpublications/Documents/APTA%20Bus%20Procurement%20Guidelines%20(June%202013).docx
FTA	Guidelines	Vehicle Design - Low-floor Vehicles	Crashworthiness	Low floor buses	Vehicle design guidelines	https://www.transit.dot.gov/research-innovation/vehicle-design
SAE	Recommended Practice	J2249_199901	Wheelchair Tie-down and Occupant Restraint Systems for Use in Motor Vehicles	Automotive including bus	This document places emphasis on design requirements, test procedures, and performance requirements for the dynamic performance of WTORS in a 48-km/h, 20-g frontal impact.	http://www.sae.org/search/?sort=date&content-type=(%22STD%22)&root-code=(%22J2249%22)

APPENDIX

C Bus Crashworthiness Standard Topics by Regulating Entity

Table C-1

Bus Crashworthiness Standard Topic by Regulating Entity

Crashworthiness Standard Topic	Regulating Entity									
	FMVSS	UNECE	ADR	APTA	FTA	SAE	IIHS	FL	WI	MN
Airbag replacement		X								
Bus emergency exits and window retention and release	X			○				X		X
Child restraint systems	X	X	X					X		
Flammability of interior materials	X	X						X		
Glazing materials	X	X	X	X				X	X	
Head restraints	○	X	●							
Occupant crash protection (allowable forces on dummy)	○	X	X		X					
Roof crush resistance/ Bus rollover protection	●	X	X	X				X		X
Seatbelt assemblies	○	X	X	○				○	X	
Seatbelt assembly anchorages	○	X	X					○		
Seating systems	○	X	X	X				X	X	
Side-impact protection	●	●	●	X			●	X		
Steering control rearward displacement	X		●							
Structural protrusion restriction			X						X	
Wheelchair tie-down and occupant restraint systems						X		X		

X = Transit bus applicable
○= Operator-only applicable
●= Exists, but not transit bus applicable

ACRONYMS AND ABBREVIATIONS

AASHTO	American Association of State Highway and Transportation Officials
ADR	Australian Design Rules
ANSI	American National Standards Institute
APTA	American Public Transportation Association
AREMA	American Railway Engineering and Maintenance of Way Association
ASCE	American Society of Civil Engineers
ASME	American Society of Mechanical Engineers
ATD	Anthropomorphic Test Devices
BEA	Bureau of Economic Analysis
BRT	Bus Rapid Transit
BTS	Bureau of Transportation Statistics
BTW	Behind the Wheel
CBTC	Communications Based Train Control
CDC	Centers for Disease Control and Prevention
CEM	Crash Energy Management
CFR	Code of Federal Regulations
CPUC	California Public Utilities Commission
CTBSSP	Commercial Truck and Bus Safety Synthesis Program
CUTR	Center for Urban Transportation Research
DC	Direct Current
DOT	Department of Transportation
ERT	Equivalent Rollover Testing
FAA	Federal Aviation Administration
FAC	Florida Administrative Code
FAST Act	Fixing America's Surface Transportation Act
FDOT	Florida Department of Transportation
FE	Finite Element
FMCSA	Federal Motor Carrier Safety Administration
FMCSR	Federal Motor Carrier Safety Regulations
FMVSS	Federal Motor Vehicle Safety Standards
FRA	Federal Railroad Administration
FTA	Federal Transit Administration
GAO	Government Accountability Office
GES	General Estimates System

GVWR	Gross Vehicle Weight Rating
HOS	Hours of Service
IEEE	Institute of Electrical and Electronics Engineers
IIHS	Insurance Institute for Highway Safety
ISO	International Standards Organization
LRV	Light Rail Vehicle
MAP–21	Moving Ahead for Progress in the 21st Century
MCI	Motorcoach Industries
MDB	Movable Deformable Barrier
MTA	Maryland Transit Administration
MUTCD	Manual on Uniform Traffic Control Devices
NASS	National Automotive Sampling System
NCTR	National Center for Transit Research
NIOSH	National Institute for Occupational Safety and Health
NFPA	National Fire Protection Association
NHTSA	National Highway Traffic Safety Administration
NHTS	National Household Travel Survey
NTD	National Transit Database
NTSB	National Transportation Safety Board
OCC	Operations Control Center
OSHA	Occupational Health and Safety Administration
PTASP	Public Transportation Agency Safety Plan
ROW	Right of Way
SAE	Society of Automotive Engineering
SEPTA	Southeastern Pennsylvania Transportation Authority
SDO	Standards Development Organization
SGR	State of Good Repair
SINCAP	Side Impact New Car Assessment Program
SMS	Safety Management Systems
SUV	Sport Utility Vehicle
SSO	State Safety Oversight
TCRP	Transit Cooperative Research Program
TRACS	Transit Advisory Committee for Safety
TRB	Transportation Research Board

U.S. Department of Transportation

Federal Transit Administration

U.S. Department of Transportation
Federal Transit Administration
East Building
1200 New Jersey Avenue, SE
Washington, DC 20590
https://www.transit.dot.gov/about/research-innovation