STATE	PROJECT	SHEET NUMBER

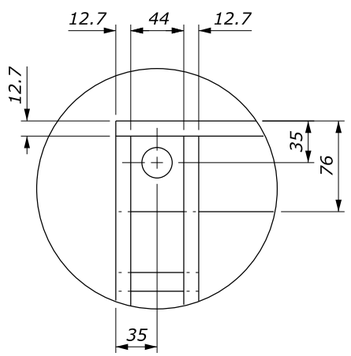

DETAIL B

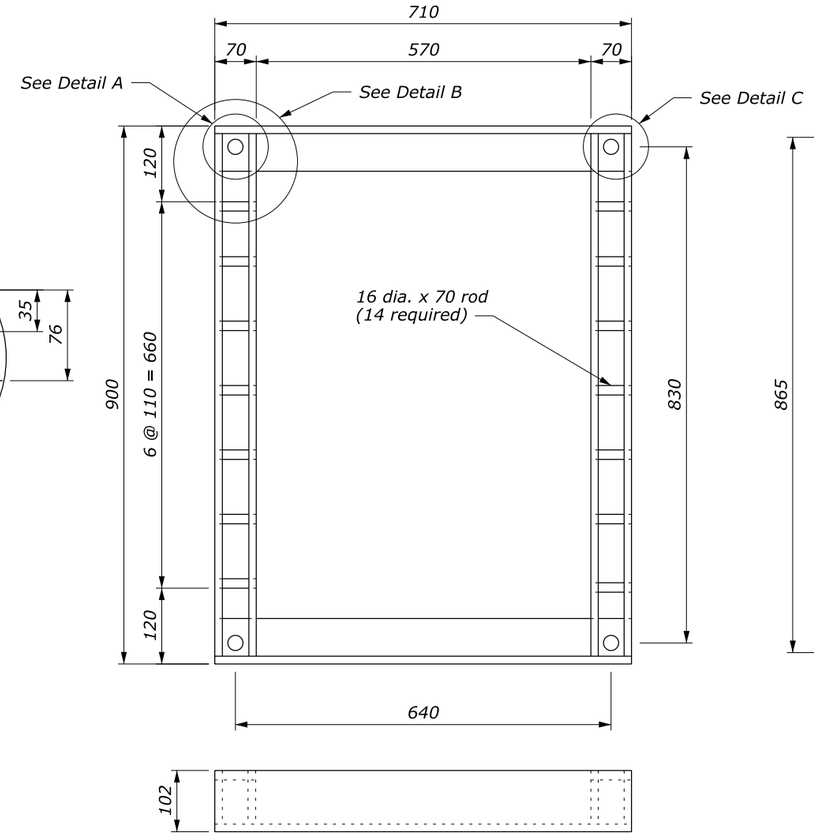

GRATE FRAME

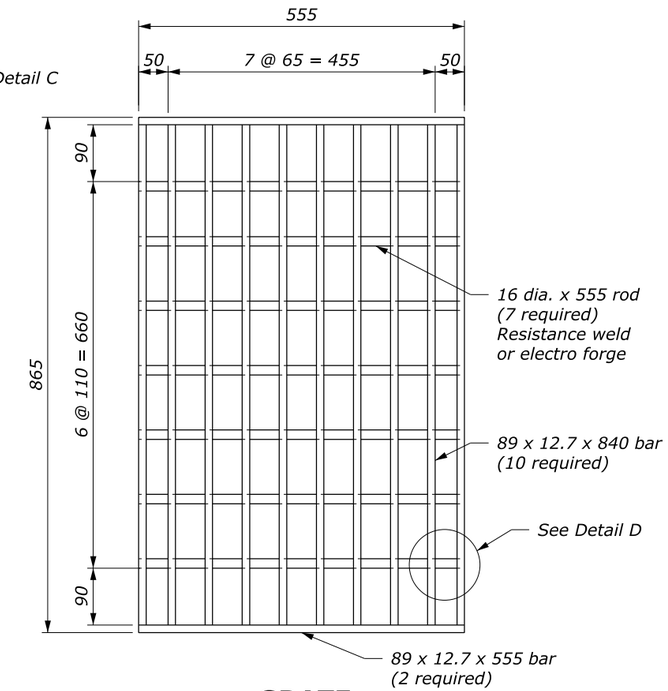

GRATE

NOTE:

1. Hot dip galvanize all metal parts for frame and grate after fabrication.
2. Fabricate frame and grate from structural steel.
3. Furnish M20 x 120 x 200 mm anchor bolts with nuts to attach frame to inlet.
4. Cut holes in 89 x 12.7 mm bar as required to place 16 mm diameter rods
5. Spot weld 16 mm diameter rods for frame and grate to 89 x 12.7 mm bars.
6. Furnish hardware in the metric sizes shown. Equivalent US Customary sizes may be used when metric sizes are unavailable.
7. Dimensions without units are millmeters.

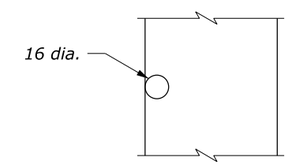

SECTION A-A

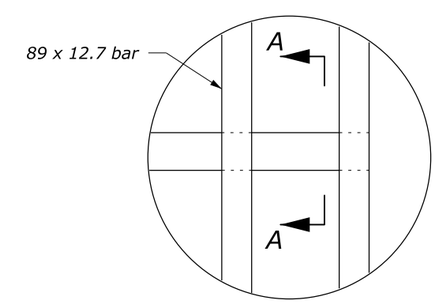

DETAIL D

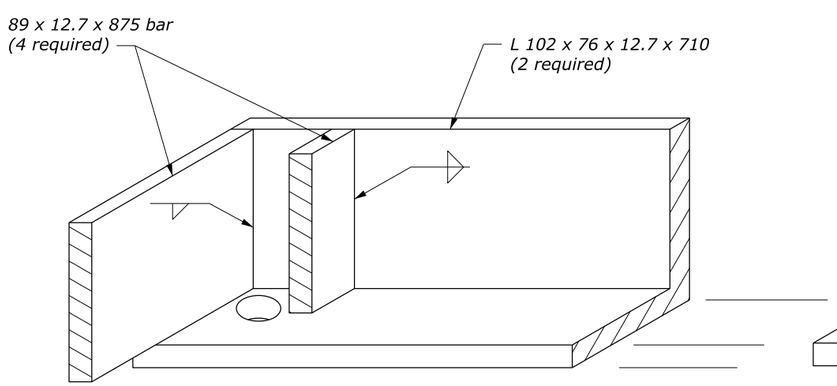

DETAIL A
(OBLIQUE)

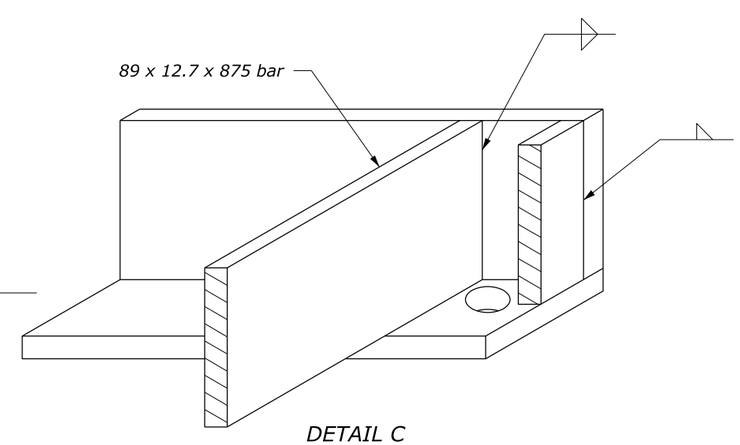

DETAIL C
(OBLIQUE)

NO SCALE

U.S. DEPARTMENT OF TRANSPORTATION
FEDERAL HIGHWAY ADMINISTRATION
FEDERAL LANDS HIGHWAY

METRIC STANDARD

FRAME AND GRATE
TYPE 5A

STANDARD APPROVED FOR USE 3/1996
REVISED: 6/2005

STANDARD
M604-6

24 February 2016 9:16 AM c:\myfiles\pw_production\d0243077\FLH-Cells.dgnlib [Border.M]