STATE	PROJECT	SHEET NUMBER

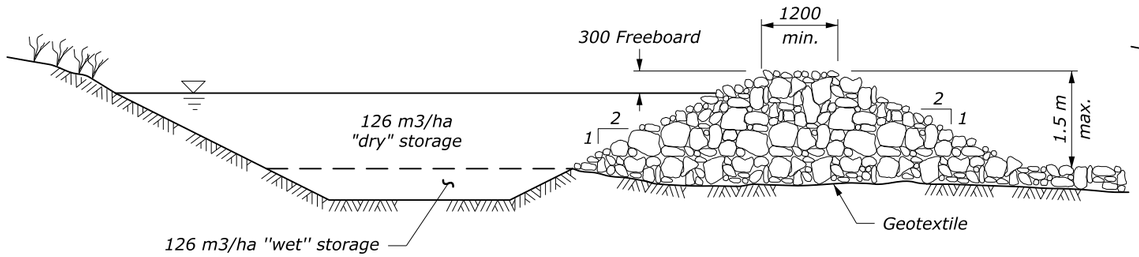

CROSS SECTION THROUGH SPILLWAY

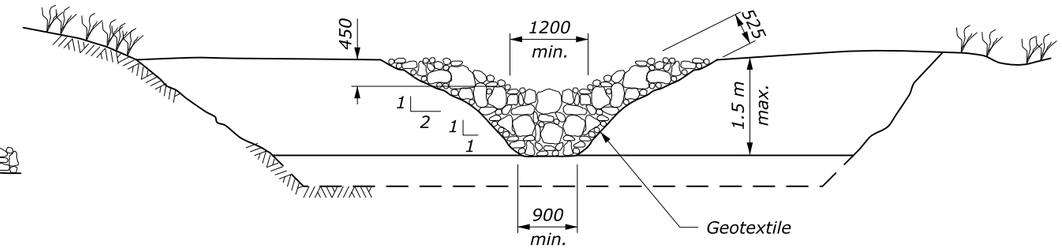

ELEVATION

SEDIMENT TRAP (TYPE A) RIPRAP OUTLET

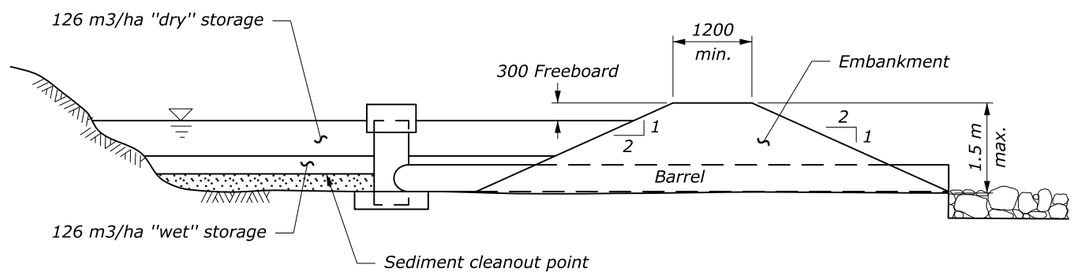

CROSS SECTION

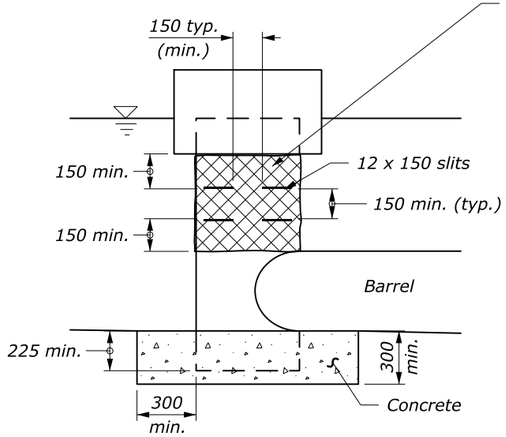

CONCRETE BASE
WITH SLIT PERFORATIONS IN RISER

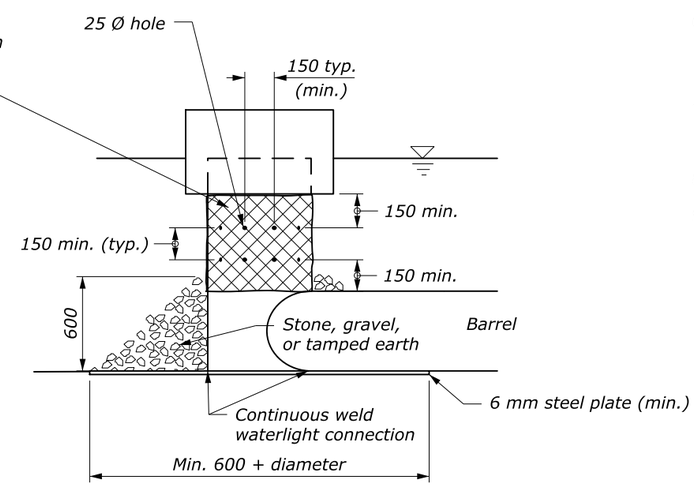

STEEL PLATE BASE
WITH HOLE PERFORATIONS IN RISER

SEDIMENT TRAP (TYPE B) PIPE OUTLET

NOTE:

1. Clear, grub, and remove all vegetative matter including root mat before constructing Sediment Trap.
2. Remove vegetative matter, other organic material, and large stones from embankment fill material.
3. Compact embankment in 200 mm layers using construction equipment for compaction of each layer.
4. Seed the soil embankment and all cut slopes with temporary or permanent vegetation within 7 days of construction.
5. Remove sediment from Sediment Trap when accumulated sediment reaches half the design water storage of the trap.
6. Inspect Sediment Trap regularly for damage and accumulated sediment and especially after each storm event. Make repairs as required.
7. Remove the Sediment Trap and stabilize the location by grading and seeding when the upslope drainage area has been stabilized against erosion.
8. Do not use sediment traps for drainage areas over 2 hectares.
9. Dimensions without units are millimeters.

NO SCALE

U.S. DEPARTMENT OF TRANSPORTATION
FEDERAL HIGHWAY ADMINISTRATION
FEDERAL LANDS HIGHWAY

METRIC STANDARD

SEDIMENT TRAP

STANDARD APPROVED FOR USE 6/2005
REVISED:

STANDARD
M157-4

11 August 2015 7:23 AM c:\myfiles\pw_production\dms44658\Std157-4.dgn [Metric]