STATE	PROJECT	SHEET NUMBER

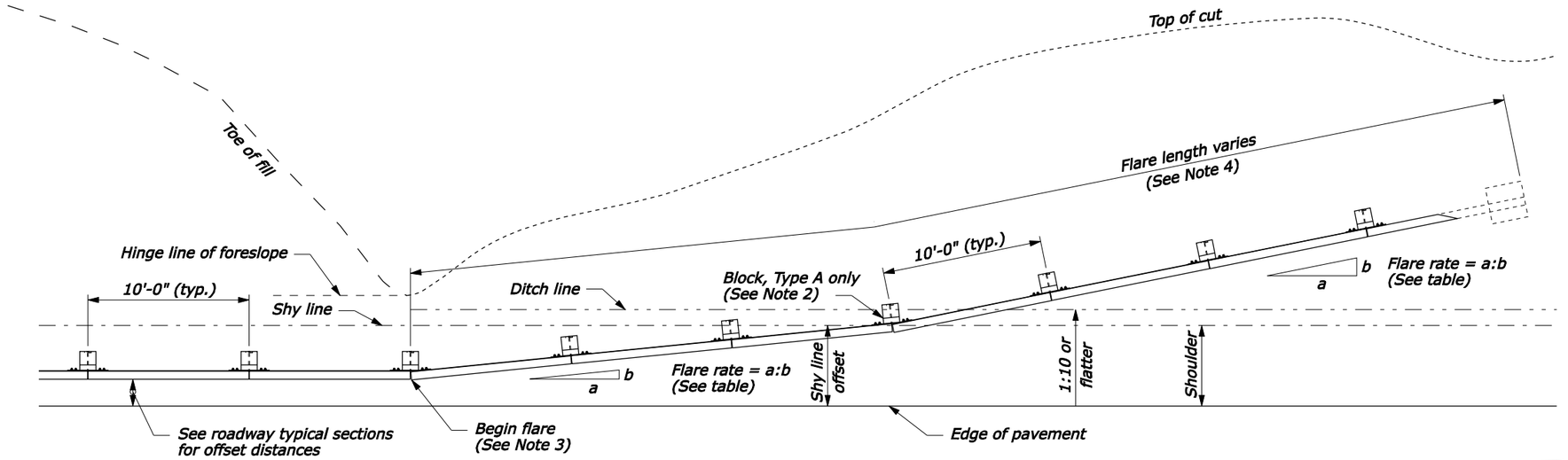

PLAN

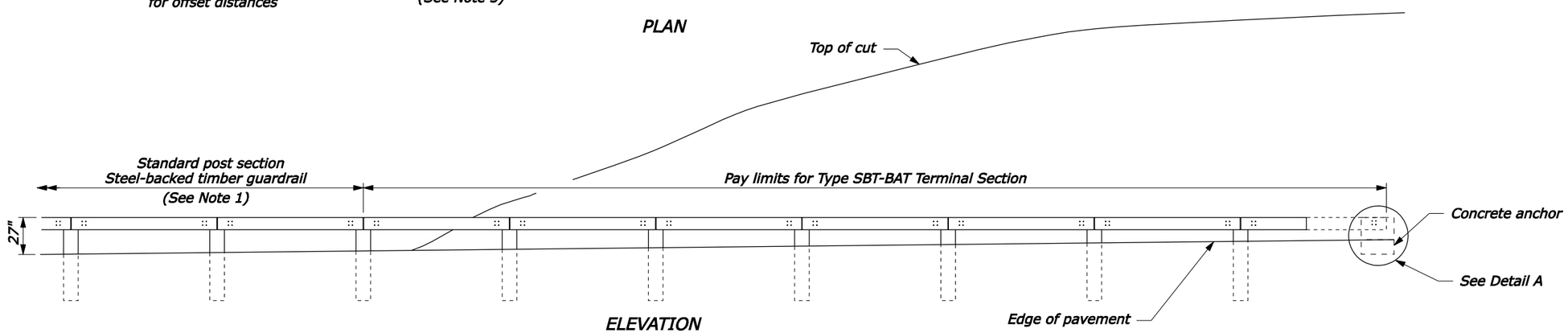

ELEVATION

APPROACH & DEPARTURE FLARE WITH BACK SLOPE ANCHOR TERMINAL (BAT)

NOTE:

1. See Standard 617-60, SBTA and SBTB for timber, structural steel, and hardware details.
2. On the Type A, blocked-out guardrail, include the blocks in the terminal section, except on the concrete anchor. For the Type B, non-blocked-out guardrail, no blocks are included.
3. Begin the cut flares at the nearest post to a transition point between fill and cut as directed by the CO.
4. Extend the flare into the cut until a minimum 1-foot cover is obtained over the guardrail end.

GUARDRAIL FLARE RATE TABLE			
Design Speed (mph)	Shy line offset (ft)	Flare rate inside shy line (a:b)	Flare rate outside shy line (a:b)
60	8.0	26:1	14:1
50	6.5	21:1	11:1
40	5.0	16:1	8:1
30 and less	3.5	13:1	7:1

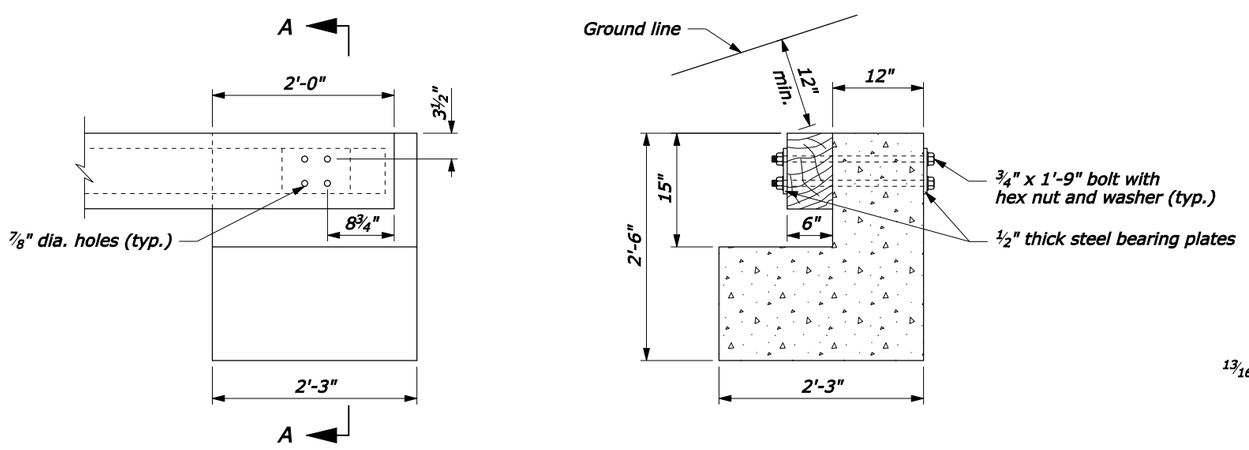

DETAIL A

SECTION A-A

CONCRETE ANCHOR

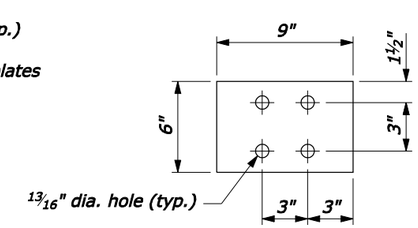

STEEL BEARING PLATE

NO SCALE

U.S. DEPARTMENT OF TRANSPORTATION
FEDERAL HIGHWAY ADMINISTRATION
FEDERAL LANDS HIGHWAY

U.S. CUSTOMARY STANDARD

STEEL-BACKED TIMBER GUARDRAIL TERMINAL SECTION TYPE SBT-BAT

STANDARD APPROVED FOR USE 3/1990
REVISED: 4/1994 6/2005

STANDARD 617-62

F:\StanDraw\st61762.dgn [US Customary] 24-Sep-2007 06:33 AM