STATE	PROJECT	SHEET NUMBER

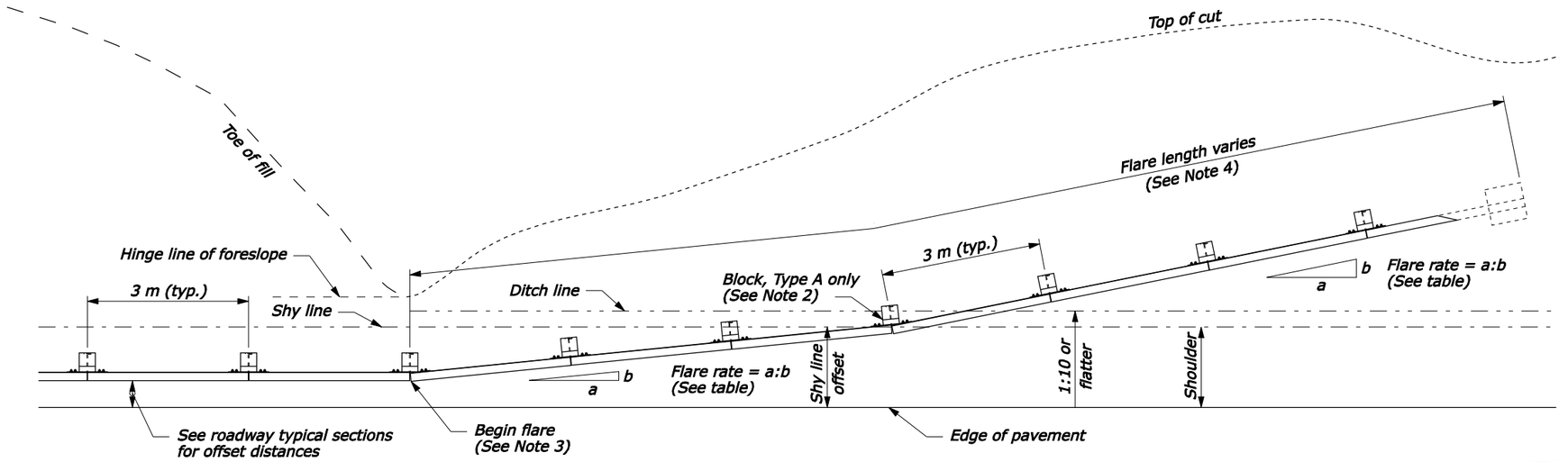

PLAN

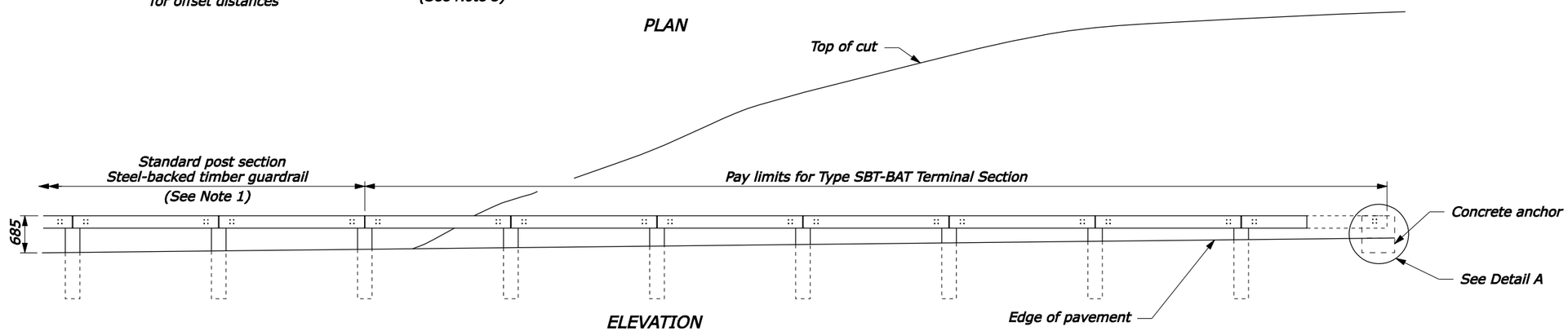

ELEVATION

APPROACH & DEPARTURE FLARE WITH BACK SLOPE ANCHOR TERMINAL (BAT)

NOTE:

1. See Standard M617-60, SBTA and SBTB for timber, structural steel, and hardware details.
2. On the Type A, blocked-out guardrail, include the blocks in the terminal section, except on the concrete anchor. For the Type B, non-blocked-out guardrail, no blocks are included.
3. Begin the cut flares at the nearest post to a transition point between fill and cut as directed by the CO.
4. Extend the flare into the cut until a minimum 300 mm cover is obtained over the guardrail end.
5. Furnish hardware in the metric sizes shown. Equivalent US Customary sizes may be used when metric sizes are not available.
6. Dimensions without units are millimeters.

GUARDRAIL FLARE RATE TABLE

Design Speed (km/h)	Shy line offset (m)	Flare rate inside shy line (a:b)	Flare rate outside shy line (a:b)
100	2.5	26:1	14:1
80	2.0	21:1	11:1
60	1.5	16:1	8:1
50 or less	1.0	13:1	7:1

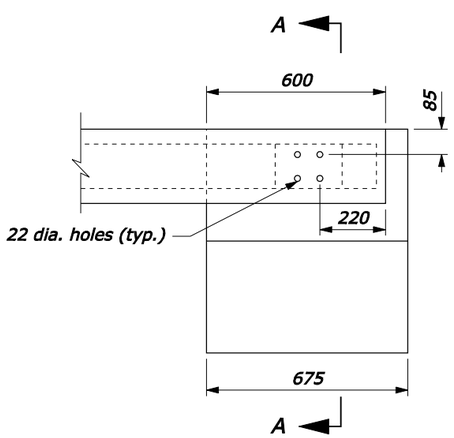

DETAIL A

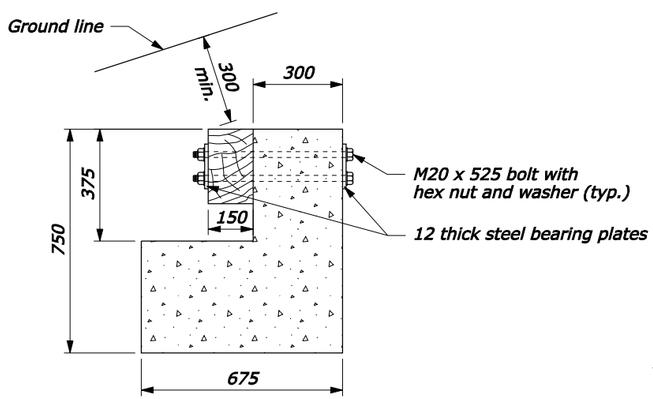

SECTION A-A

CONCRETE ANCHOR

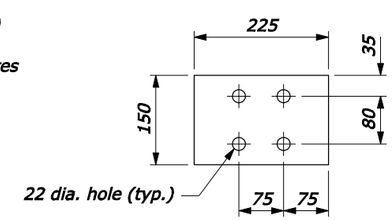

STEEL BEARING PLATE

NO SCALE

U.S. DEPARTMENT OF TRANSPORTATION
FEDERAL HIGHWAY ADMINISTRATION
FEDERAL LANDS HIGHWAY

METRIC STANDARD

STEEL-BACKED TIMBER GUARDRAIL TERMINAL SECTION TYPE SBT-BAT

STANDARD APPROVED FOR USE 3/1996
REVISED: 6/2005

STANDARD
M617-62

24-Sep-2007 06:32 AM
F:\StanDraw\st61762.dgn [Metric]