TTI: 0-6946

Texas A&M Transportation Institute

MASH EVALUATION OF TxDOT ROADSIDE SAFETY FEATURES —PHASE II



Test Report 0-6946-R2

Cooperative Research Program

TEXAS A&M TRANSPORTATION INSTITUTE

COLLEGE STATION, TEXAS

TEXAS DEPARTMENT OF TRANSPORTATION

in cooperation with the
Federal Highway Administration and the
Texas Department of Transportation
http://tti.tamu.edu/documents/0-6946-R2.pdf

Technical Report Documentation Page

1. Report No.	2. Government Accession No.	3. Recipient's Catalog No.
FHWA/TX-18/0-6946-R2		

4. Title and Subtitle	5. Report Date
***MASH* EVALUATION OF TXDOT ROADSIDE SAFETY FEATURES—PHASE II**	Published: March 2019
	6. Performing Organization Code

7. Author(s)	8. Performing Organization Report No.
Roger P. Bligh, Wanda L. Menges, Bill L. Griffith, Glenn E. Schroeder, and Darrell L. Kuhn	Report 0-6946-R2

9. Performing Organization Name and Address	10. Work Unit No. (TRAIS)
Texas A&M Transportation Institute College Station, Texas 77843-3135	11. Contract or Grant No. Project 0-6946

12. Sponsoring Agency Name and Address	13. Type of Report and Period Covered
Texas Department of Transportation Research and Technology Implementation Office 125 E. 11th Street Austin, Texas 78701-2483	Technical Report: September 2017–August 2018
	14. Sponsoring Agency Code

15. Supplementary Notes

Project performed in cooperation with the Texas Department of Transportation and the Federal Highway Administration.

Project Title: Establishing Comprehensive *Manual on Assessing Safety Hardware* (*MASH*) Compliance for Roadside Safety Systems in Texas

URL: http://tti.tamu.edu/documents/0-6946-R2.pdf

16. Abstract

In 2009, the American Association of State Highway and Transportation Officials (AASHTO) published the *Manual for Assessing Safety Hardware* (*MASH*), which supersedes the previous crash test and evaluation guidelines. A *MASH* implementation agreement was jointly developed and adopted by the Federal Highway Administration and AASHTO. It establishes implementation dates for different categories of roadside safety features.

Texas Department of Transportation, Bridge, Design, Maintenance, and Traffic Operations Divisions reviewed their standards for roadside safety devices and identified those devices that require testing and evaluation to assess *MASH* compliance. Under this project, roadside safety systems used in Texas will be crash tested in accordance with *MASH* criteria in three phases over a three-year period.

A total of 10 devices were tested and evaluated during Phase I. In Phase II, which is the subject of this report, an additional 14 devices were tested and evaluated.

This report documents the crash testing and evaluation of these devices in accordance with *MASH* criteria. The critical configurations were identified and critical tests performed to assess *MASH* compliance.

17. Key Words	18. Distribution Statement
Bridge Rail, Median Barrier, Guardrail, Single Slope Barrier, Light Pole, Sign Support, Mailbox, Skid-Mounted, Rocky Terrain, Round Posts, Wood Posts, Steel Posts, Crash Test, *MASH*, Roadside Safety	No restrictions. This document is available to the public through NTIS: National Technical Information Service Alexandria, Virginia http://www.ntis.gov

19. Security Classif.(of this report)	20. Security Classif.(of this page)	21. No. of Pages	22. Price
Unclassified	Unclassified	674	

Form DOT F 1700.7 (8-72) Reproduction of completed page authorized

MASH EVALUATION OF TXDOT ROADSIDE SAFETY FEATURES —PHASE II

by

Roger P. Bligh, P.E., Ph.D.
Senior Research Engineer
Texas A&M Transportation Institute

Wanda L. Menges
Research Specialist
Texas A&M Transportation Institute

Bill L. Griffith
Research Specialist
Texas A&M Transportation Institute

Glenn E. Schroeder
Research Specialist
Texas A&M Transportation Institute

and

Darrell L. Kuhn, P.E.
Research Specialist
Texas A&M Transportation Institute

Report 0-6946-R2
Project 0-6946
Project Title: Establishing Comprehensive *Manual on Assessing Safety Hardware* (*MASH*) Compliance for Roadside Safety Systems in Texas

Performed in cooperation with the
Texas Department of Transportation
and the
Federal Highway Administration

Published: March 2019

TEXAS A&M TRANSPORTATION INSTITUTE
College Station, Texas 77843-3135

DISCLAIMER

This research was performed in cooperation with the Texas Department of Transportation (TxDOT) and the Federal Highway Administration (FHWA). The contents of this report reflect the views of the authors, who are responsible for the facts and the accuracy of the data presented herein. The contents do not necessarily reflect the official view or policies of the FHWA or TxDOT.

This report does not constitute a standard, specification, or regulation. This report is not intended for construction, bidding, or permit purposes. The engineer in charge of the project was Roger P. Bligh, P.E. #78550.

The United States Government and the State of Texas do not endorse products or manufacturers. Trade of manufacturers' names appear herein solely because they are considered essential to the object of this report.

TTI PROVING GROUND DISCLAIMER

ACCREDITED
ISO 17025 Laboratory
Testing Certificate # 2821.01

Crash testing performed at:
TTI Proving Ground
3100 SH 47, Building 7091
Bryan, TX 77807

The full-scale crash tests reported herein were performed at the Texas A&M Transportation Institute (TTI) Proving Ground, an International Standards Organization (ISO)/International Electrotechnical Commission (IEC) 17025-accredited laboratory with American Association for Laboratory Accreditation (A2LA) Mechanical Testing Certificate 2821.01. The full-scale crash tests were performed according to TTI Proving Ground quality procedures, and according to the *MASH* guidelines and standards. The results reported herein apply only to the articles being tested.

THE TTI PROVING GROUND LAB SHALL NOT BE LIABLE FOR ANY INDIRECT, CONSEQUENTIAL, PUNITIVE, OR OTHER DAMAGES SUFFERED BY TEXAS DEPARTMENT OF TRANSPORTATION OR ANY OTHER PERSON OR ENTITY, WHETHER SUCH LIABILITY IS BASED, OR CLAIMED TO BE BASED, UPON ANY NEGLIGENT ACT, OMISSION, ERROR, CORRECTION OF ERROR, DELAY, OR BREACH OF AN OBLIGATION BY THE TTI PROVING GROUND LAB.

SI* (MODERN METRIC) CONVERSION FACTORS

APPROXIMATE CONVERSIONS TO SI UNITS

Symbol	When You Know	Multiply By	To Find	Symbol
		LENGTH		
in	inches	25.4	millimeters	mm
ft	feet	0.305	meters	m
yd	yards	0.914	meters	m
mi	miles	1.61	kilometers	km
		AREA		
in^2	square inches	645.2	square millimeters	mm^2
ft^2	square feet	0.093	square meters	m^2
yd^2	square yards	0.836	square meters	m^2
ac	acres	0.405	hectares	ha
mi^2	square miles	2.59	square kilometers	km^2
		VOLUME		
fl oz	fluid ounces	29.57	milliliters	mL
gal	gallons	3.785	liters	L
ft^3	cubic feet	0.028	cubic meters	m^3
yd^3	cubic yards	0.765	cubic meters	m^3
	NOTE: volumes greater than 1000L shall be shown in m^3			
		MASS		
oz	ounces	28.35	grams	g
lb	pounds	0.454	kilograms	kg
T	short tons (2000 lb)	0.907	megagrams (or “metric ton”)	Mg (or “t”)
		TEMPERATURE (exact degrees)		
°F	Fahrenheit	5(F-32)/9 or (F-32)/1.8	Celsius	°C
		FORCE and PRESSURE or STRESS		
lbf	poundforce	4.45	newtons	N
lbf/in^2	poundforce per square inch	6.89	kilopascals	kPa

APPROXIMATE CONVERSIONS FROM SI UNITS

Symbol	When You Know	Multiply By	To Find	Symbol
		LENGTH		
mm	millimeters	0.039	inches	in
m	meters	3.28	feet	ft
m	meters	1.09	yards	yd
km	kilometers	0.621	miles	mi
		AREA		
mm^2	square millimeters	0.0016	square inches	in^2
m^2	square meters	10.764	square feet	ft^2
m^2	square meters	1.195	square yards	yd^2
ha	hectares	2.47	acres	ac
km^2	Square kilometers	0.386	square miles	mi^2
		VOLUME		
mL	milliliters	0.034	fluid ounces	oz
L	liters	0.264	gallons	gal
m^3	cubic meters	35.314	cubic feet	ft^3
m^3	cubic meters	1.307	cubic yards	yd^3
		MASS		
g	grams	0.035	ounces	oz
kg	kilograms	2.202	pounds	lb
Mg (or “t”)	megagrams (or “metric ton”)	1.103	short tons (2000lb)	T
		TEMPERATURE (exact degrees)		
°C	Celsius	1.8C+32	Fahrenheit	°F
		FORCE and PRESSURE or STRESS		
N	newtons	0.225	poundforce	lbf
kPa	kilopascals	0.145	poundforce per square inch	lb/in^2

*SI is the symbol for the International System of Units

ACKNOWLEDGMENTS

This project was conducted in cooperation with TxDOT and FHWA. The project team would like to thank Mr. Wade Odell, P.E. (TxDOT Project Manager), Mr. Ken Mora, P.E., and Mr. Chris Lindsey, P.E., with the TxDOT Design Division, Ms. Taya Retterer, P.E., and Mr. Jon Ries with the TxDOT Bridge Division, Mr. Doug Skowronek, P.E., and Mr. Mark Johnson, P.E., with the Traffic Operations Division, and Mrs. Alanna Bettis, P.E., with the Maintenance Division for their valuable assistance and input on this project. Their contributions were instrumental to the success of the project.

DocuSign Envelope ID: 7E9735BA-7B57-44DC-8EA4-83575291319B

REPORT AUTHORIZATION

DocuSigned by:
Billy Griffith
44A122CB271845B...

Bill L. Griffith, Research Specialist
Deputy Quality Manager

DocuSigned by:
Darrell L. Kuhn
D4CC23E63D1B427...

Darrell L. Kuhn, P.E., Research Specialist
Quality Manager

DocuSigned by:
Matt Robinson
EAA22BFA5BED417...

Matthew N. Robinson, Research Specialist
Test Facility Manager & Technical Manager

DocuSigned by:
Roger Bligh
DACC25BADEB438...

Roger P. Bligh, Ph.D., P.E.
Senior Research Engineer

TABLE OF CONTENTS

Page

List of Figures ..... **xviii**
List of Tables ..... **xxiv**
Chapter 1: Introduction **1**
Chapter 2: TxDOT C402 Bridge Rail **3**
2.1 Background 3
2.2 System Details 4
2.2.1 Test Article Design and Construction 4
2.2.2 Material Specifications 4
2.3 *MASH* Test 4-10 (Crash Test No. 469468-1-1) 4
2.3.1 Test Designation and Actual Impact Conditions 4
2.3.2 Weather Conditions 4
2.3.3 Test Vehicle 6
2.3.4 Test Description 7
2.3.5 Damage to Test Installation 8
2.3.6 Damage to Test Vehicle 8
2.3.7 Occupant Risk Factors 8
2.3.8 Assessment of Results 11
2.4 *MASH* Test 4-11 (Crash Test No. 469468-1-2) 14
2.4.1 Test Designation and Actual Impact Conditions 14
2.4.2 Weather Conditions 14
2.4.3 Test Vehicle 14
2.4.4 Test Description 15
2.4.5 Damage to Test Installation 16
2.4.6 Damage to Test Vehicle 17
2.4.7 Occupant Risk Factors 17
2.4.8 Assessment of Results 18
2.5 *MASH* Test 4-12 (Crash Test No. 469468-1-3) 21
2.5.1 Test Designation and Actual Impact Conditions 21
2.5.2 Weather Conditions 21
2.5.3 Test Vehicle 21
2.5.4 Test Description 22
2.5.5 Damage to Test Installation 22
2.5.6 Damage to Test Vehicle 23
2.5.7 Occupant Risk Factors 24
2.5.8 Assessment of Results 24
2.6 Conclusions 28
Chapter 3: TxDOT C412 Bridge Rail **29**
3.1 Background 29
3.2 Test Article and Installation Details 29
3.3 Material Specifications 29

TABLE OF CONTENTS (CONTINUED)

Page

3.4 MASH Test 5-12 (Crash Test No. 469468-2-1) 31
3.4.1 Test Designation and Actual Impact Conditions 31
3.4.2 Weather Conditions 32
3.4.3 Test Vehicle 32
3.4.4 Test Description 33
3.4.5 Damage to Test Installation 33
3.4.6 Damage to Test Vehicle 35
3.4.7 Occupant Risk Factors 36
3.4.8 Assessment of Results 38
3.5 Conclusions 38
Chapter 4: TxDOT C411 Bridge Rail 41
4.1 Background 41
4.2 System Details 41
4.2.1 Test Article and Installation Details 41
4.2.2 Material Specifications 41
4.3 *MASH* Test 2-10 (Test No. 469468-3-1) 43
4.3.1 Test Designation and Actual Impact Conditions 43
4.3.2 Weather Conditions 44
4.3.3 Test Vehicle 44
4.3.4 Test Description 45
4.3.5 Damage to Test Installation 45
4.3.6 Damage to Test Vehicle 46
4.3.7 Occupant Risk Factors 47
4.3.8 Assessment of Results 48
4.4 *MASH* Test 2-11 (Test No. 469468-3-2) 51
4.4.1 Test Designation and Actual Impact Conditions 51
4.4.2 Weather Conditions 51
4.4.3 Test Vehicle 51
4.4.4 Test Description 52
4.4.5 Damage to Test Installation 52
4.4.6 Damage to Test Vehicle 53
4.4.7 Occupant Risk Factors 55
4.4.8 Assessment of Results 55
4.5 Conclusions 58
Chapter 5: TxDOT T1W Bridge Rail 59
5.1 Background 59
5.2 System Details 59
5.2.1 Test Article and Installation Details 59
5.2.2 Material Specifications 59
5.3 *MASH* Test 3-10 (Test No. 469468-4-1) 61
5.3.1 Test Designation and Actual Impact Conditions 61
5.3.2 Weather Conditions 61

TABLE OF CONTENTS (CONTINUED)

Page

5.3.3 Test Vehicle 62
5.3.4 Test Description 63
5.3.5 Damage to Test Installation 63
5.3.6 Damage to Test Vehicle 64
5.3.7 Occupant Risk Factors 65
5.3.8 Assessment of Results 65
5.4 *MASH* Test 3-11 (Test No. 469468-4-2) 69
5.4.1 Test Designation and Actual Impact Conditions 69
5.4.2 Weather Conditions 69
5.4.3 Test Vehicle 69
5.4.4 Test Description 70
5.4.5 Damage to Test Installation 70
5.4.6 Damage to Test Vehicle 72
5.4.7 Occupant Risk Factors 73
5.4.8 Assessment of Results 75
5.5 Conclusions 75
Chapter 6: Round Wood Post W-Beam Guardrail 79
6.1 Background 79
6.2 System Details 79
6.2.1 Test Article and Installation Details 79
6.2.2 Material Specifications 80
6.2.3 Soil Conditions 80
6.3 *MASH* Test 3-11 (Crash Test No. 469468-5-1) 80
6.3.1 Test Designation and Actual Impact Conditions 80
6.3.2 Weather Conditions 83
6.3.3 Test Vehicle 83
6.3.4 Test Description 84
6.3.5 Damage to Test Installation 85
6.3.6 Damage to Test Vehicle 87
6.3.7 Occupant Risk Factors 88
6.3.8 Assessment of Test Results 90
6.4 Conclusions 90
Chapter 7: TxDOT 42-Inch Single Slope Concrete Median Barrier with Light Pole 93
7.1 Background 93
7.2 Test Article and Installation Details 93
7.3 Material Specifications 95
7.4 MASH Test 3-12 (469468-6-1) 96
7.4.1 Test Designation and Actual Impact Conditions 96
7.4.2 Weather Conditions 96
7.4.3 Test Vehicle 96
7.4.4 Test Description 97
7.4.5 Damage to Test Installation 98

TABLE OF CONTENTS (CONTINUED)

Page

7.4.6 Damage to Test Vehicle 99
7.4.7 Occupant Risk Factors 99
7.4.8 Assessment of Test Results 102
7.5 Conclusions 102
Chapter 8: Skid-Mounted Single-Post Perforated Steel Tube Temporary Sign Support 105
8.1 Background 105
8.2 System Details 105
8.3 *MASH* Test 3-72 at 0° (Crash Test No. 469468-7-1) 108
8.3.1 Test Designation and Actual Impact Conditions 108
8.3.2 Weather Conditions 109
8.3.3 Test Vehicle 109
8.3.4 Test Description 110
8.3.5 Damage to Test Installation 110
8.3.6 Damage to Test Vehicle 110
8.3.7 Occupant Risk Factors 110
8.3.8 Assessment of Test Results 110
8.4 *MASH* Test 3-72 at 90° (Crash Test No. 469468-7-2) 115
8.4.1 Test Designation and Actual Impact Conditions 115
8.4.2 Weather Conditions 115
8.4.3 Test Vehicle 115
8.4.4 Test Description 116
8.4.5 Damage to Test Installation 116
8.4.6 Damage to Test Vehicle 117
8.4.7 Occupant Risk Factors 119
8.4.8 Assessment of Test Results 119
8.5 Conclusions 119
Chapter 9: Mailboxes 123
9.1 Background 123
9.2 Single Mailbox with Recycled Rubber Support POST in Type 4 Foundation 124
9.2.1 System Details 124
9.2.2 *MASH* Test 3-61 (Crash Test No. 469468-8-1) 124
9.3 Double Mailbox with Thin-Wall Galvanized Support Post in Type 4 Foundation 133
9.3.1 System Details 133
9.3.2 *MASH* Test 3-61 (Crash Test No. 469468-8-2) 133
9.4 Multiple Mailboxes with Multi-Mount Support in Type 4 Foundation 142
9.4.1 Background 142
9.4.2 System Details 142
9.4.3 *MASH* Test 3-61 (Crash Test No. 469468-8-3) 143

TABLE OF CONTENTS (CONTINUED)

Page

9.5 Single Molded Plastic Mailmaster® Mailbox with Wood Support in Type 5 Foundation 152
9.5.1 System Details 152
9.5.2 *MASH* Test 3-61 (Crash Test No. 469468-8-4) 152
9.6 Conclusions 161
9.6.1 Single Mailbox with Recycle Rubber Support in Type 4 Foundation 161
9.6.2 Double Mailbox with Thin-Wall Galvanized Support in Type 4 Foundation 161
9.6.3 Multiple Mailboxes with Multi-Mount Support in Type 4 Foundation 161
9.6.4 Single Molded Plastic Mailmaster® Mailbox with Wood Support in Type 5 Foundation 161
9.6.5 Assessment 162
Chapter 10: Skid-Mounted Dual Wood Post Temporary Sign Support System 163
10.1 Background 163
10.2 System Details 163
10.3 MASH Test 3-72 (Crash Test nO. 469468-9-1) 167
10.3.1 Test Designation and Actual Impact Conditions 167
10.3.2 Weather Conditions 168
10.3.3 Test Vehicle 168
10.3.4 Test Description 169
10.3.5 Damage to Test Installation 169
10.3.6 Damage to Test Vehicle 169
10.3.7 Occupant Risk Factors 169
10.3.8 Assessment of Test Results 173
10.4 Conclusions 173
Chapter 11: MBGF with W6×8.5 Steel Posts in Rocky Terrain 175
11.1 Background 175
11.2 System Details 175
11.2.1 Test Article and Installation Details 175
11.2.2 Material Properties 175
11.2.3 Soil Conditions 178
11.3 *MASH* Test 3-10 (Crash Test No. 469468-10-2) 179
11.3.1 Test Designation and Actual Impact Conditions 179
11.3.2 Weather Conditions 180
11.3.3 Test Vehicle 180
11.3.4 Test Description 181
11.3.5 Damage to Test Installation 181
11.3.6 Damage to Test Vehicle 183
11.3.7 Occupant Risk Factors 183
11.3.8 Assessment of Test Results 184

TABLE OF CONTENTS (CONTINUED)

Page

11.4 *MASH* Test 3-11 (Crash Test No. 469468-10-1) 187
11.4.1 Test Designation and Actual Impact Conditions 187
11.4.2 Weather Conditions 187
11.4.3 Test Vehicle 187
11.4.4 Test Description 188
11.4.5 Damage to Test Installation 189
11.4.6 Damage to Test Vehicle 189
11.4.7 Occupant Risk Factors 189
11.4.8 Assessment of Test Results 189
11.5 Conclusions 195
Chapter 12: MBGF with Round Wood Posts in Rocky Terrain 197
12.1 Background 197
12.2 System Details 197
12.2.1 Test Article and Installation Details 197
12.2.2 Material Properties 200
12.2.3 Soil Conditions 200
12.3 *MASH* Test 3-11 (Crash Test No. 469468-12-1) 201
12.3.1 Test Designation and Actual Impact Conditions 201
12.3.2 Weather Conditions 201
12.3.3 Test Vehicle 202
12.3.4 Test Description 202
12.3.5 Damage to Test Installation 203
12.3.6 Damage to Test Vehicle 205
12.3.7 Occupant Risk Factors 206
12.3.8 Assessment of Test Results 206
12.4 Conclusions 210
Chapter 13: Summary and Conclusions 211
13.1 TxDOT C402 Bridge Rail 211
13.2 TxDOT C412 Bridge Rail 211
13.3 TxDOT C411 Bridge Rail 212
13.4 TxDOT T1W Bridge Rail 212
13.5 Round Wood Post W-Beam Guardrail 213
13.6 TxDOT 42-Inch Single Slope Concrete Median Barrier with Light Pole 213
13.7 Skid-Mounted Single-Post Perforated Steel Tube Temporary Sign Support 213
13.8 Mailboxes 214
13.8.1 Single Mailbox – Recycled Rubber Support Post – Type 4 Foundation 214
13.8.2 Double Mailbox – Thin-Wall Galvanized Pipe Support – Type 4 Foundation 214
13.8.3 Multiple Mailboxes – Multi-Mount Support – Type 4 Foundation 214
13.8.4 Single Molded Plastic Mailmaster® Mailbox – Wood Support Post– Type 5 Foundation 215
13.9 Skid-Mounted Dual Wood Post Temporary Sign Support System 215

TABLE OF CONTENTS (CONTINUED)

Page

13.10 MBGF with W6×8.5 Steel Posts in Rocky Terrain 215
13.11 MBGF with Round Wood PostS in Rocky Terrain 216
Chapter 14: Implementation 217
14.1 TxDOT C402 Bridge Rail 217
14.2 TxDOT C412 Bridge Rail 218
14.3 TxDOT C411 Bridge Rail 218
14.4 TxDOT T1W Bridge Rail 218
14.5 Round Wood Post W-Beam Guardrail 219
14.6 TxDOT 42-Inch Single Slope Concrete Median Barrier with Light Pole 219
14.7 Skid-Mounted Single-Post Perforated Steel Tube Temporary Sign Support 220
14.8 Mailboxes 220
14.9 Skid-Mounted Dual Wood Post Temporary Sign Support System 221
14.10 MBGF with Steel Posts in Rocky Terrain 222
14.11 MBGF with Round Wood PostS in Rocky Terrain 222
References 225
Appendix A. TxDOT C402 Bridge Rail A-1
Appendix B. TxDOT C412 Bridge Rail B-1
Appendix C. TxDOT C411 Bridge Rail C-1
Appendix D. TxDOT T1W Bridge Rail D-1
Appendix E. Round Wood Post W-Beam Guardrail E-1
Appendix F. TxDOT 42-inch Single-Slope Concrete Median Barrier with Light Pole F-1
Appendix G. Skid-Mounted Single Perforated Steel Tube Sign Support System G-1
Appendix H. Mailboxes H-1
Appendix I. Skid-Mounted Dual Wood Post Temporary Sign Support System I-1
Appendix J. MBGF with W6×8.5 Steel Posts in Rocky Terrain J-1
Appendix K. Round Wood Post W-Beam Guardrail K-1

LIST OF FIGURES

Page

Figure 2.1. Target CIPs for *MASH* TL-4 on TxDOT C402 Bridge Rail. 3
Figure 2.2. Overall Details of TxDOT C402 Bridge Rail. 5
Figure 2.3. TxDOT C402 Bridge Rail prior to Testing. 6
Figure 2.4. TxDOT C402 Bridge Rail/Test Vehicle Geometrics for Test No. 469468-1-1. 7
Figure 2.5. Test Vehicle before Test No. 469468-1-1 7
Figure 2.6. TxDOT C402 Bridge Rail after Test No. 469468-1-1. 9
Figure 2.7. Test Vehicle after Test No. 469468-1-1. 10
Figure 2.8. Interior of Test Vehicle for Test No. 469468-1-1. 10
Figure 2.9. Summary of Results for *MASH* Test 4-10 on TxDOT C402 Bridge Rail. 12
Figure 2.10. TxDOT C402 Bridge Rail/Test Vehicle Geometrics for Test No. 469468-1-2. 14
Figure 2.11. Test Vehicle before Test No. 469468-1-2 15
Figure 2.12. TxDOT C402 Bridge Rail after Test No. 469468-1-2. 16
Figure 2.13. Test Vehicle after Test No. 469468-1-2. 17
Figure 2.14. Windshield and Interior of Test Vehicle after Test No. 469468-1-2. 17
Figure 2.15. Summary of Results for *MASH* Test 4-11 on TxDOT C402 Bridge Rail. 19
Figure 2.16. TxDOT C402 Bridge Rail/Test Vehicle Geometrics for Test No. 469468-1-3. 21
Figure 2.17. Test Vehicle before Test No. 469468-1-3 22
Figure 2.18. TxDOT C402 Bridge Rail after Test No. 469468-1-3. 23
Figure 2.19. Test Vehicle after Test No. 469468-1-3. 24
Figure 2.20. Interior of Test Vehicle for Test No. 469468-1-3. 24
Figure 2.21. Summary of Results for *MASH* Test 4-12 on TxDOT C402 Bridge Rail. 26
Figure 3.1. Overall Details of TxDOT C412 Bridge Rail. 30
Figure 3.2. TxDOT C412 Bridge Rail prior to Testing. 31
Figure 3.3. TxDOT C412 Bridge Rail/Test Vehicle Geometrics for Test No. 469468-2-1. 32
Figure 3.4. Test Vehicle before Test No. 469468-2-1 32
Figure 3.5. TxDOT C412 Bridge Rail/Test Vehicle after Test No. 469468-2-1. 33
Figure 3.6. TxDOT C412 Bridge Rail after Test No. 469468-2-1. 34
Figure 3.7. Field Side of TxDOT C412 Bridge Rail after Test No. 469468-2-1. 35
Figure 3.8. Test Vehicle after Test No. 469468-2-1. 35
Figure 3.9. Interior of Test Vehicle for Test No. 469468-2-1. 36
Figure 3.10. Summary of Results for *MASH* Test 5-12 on TxDOT C412 Bridge Rail. 37
Figure 4.1. Overall Details of TxDOT C411 Bridge Rail. 42
Figure 4.2. TxDOT C411 Bridge Rail prior to Testing. 43
Figure 4.3. Target CIPs for Test No. 469468-3-1 and 3-2. 44
Figure 4.4. TxDOT C411 Bridge Rail/Test Vehicle Geometrics for Test No. 469468-3-1. 44
Figure 4.5. Test Vehicle before Test No. 469468-3-1 45
Figure 4.6. TxDOT C411 Bridge Rail after Test No. 469468-3-1. 46

LIST OF FIGURES (CONTINUED)

Page

Figure 4.7. Test Vehicle after Test No. 469468-3-1. 47
Figure 4.8. Interior of Test Vehicle after Test No. 469468-3-1. 47
Figure 4.9. Summary of Results for *MASH* Test 2-10 on TxDOT C411 Bridge Rail. 49
Figure 4.10. TxDOT C411 Bride Rail/Test Vehicle Geometrics for Test No. 469468-3-2. 51
Figure 4.11. Test Vehicle before Test No. 469468-3-2 52
Figure 4.12. TxDOT C411 Bridge Rail after Test No. 469468-3-2. 53
Figure 4.13. Test Vehicle after Test No. 469468-3-2. 54
Figure 4.14. Interior of Test Vehicle after Test No. 469468-3-2. 54
Figure 4.15. Summary of Results for *MASH* Test 2-11 on TxDOT C411 Bridge Rail. 56
Figure 5.1. Overall Details of TxDOT T1W Bridge Rail. 60
Figure 5.2. TxDOT T1W Bridge Rail prior to Testing. 61
Figure 5.3. Target CIPs for Test Nos. 469468-4-1 and 4-2 62
Figure 5.4. TxDOT T1W Bridge Rail/Test Vehicle Geometrics for Test No. 469468-4-1. 62
Figure 5.5. Test Vehicle before Test No. 469468-4-1 63
Figure 5.6. TxDOT T1W Bridge Rail after Test No. 469468-4-1. 64
Figure 5.7. Test Vehicle after Test No. 469468-4-1. 65
Figure 5.8. Interior of Test Vehicle after Test No. 469468-4-1. 65
Figure 5.9. Summary of Results for *MASH* Test 3-10 on TxDOT T1W Bridge Rail. 67
Figure 5.10. TxDOT T1W Bridge Rail/Test Vehicle Geometrics for Test No. 469468-4-2. 69
Figure 5.11. Test Vehicle before Test No. 469468-4-2 70
Figure 5.12. TxDOT T1W Bridge Rail after Test No. 469468-4-2. 71
Figure 5.13. Field Side of Post 5 after Test No. 469468-4-2. 72
Figure 5.14. Test Vehicle after Test No. 469468-4-2. 72
Figure 5.15. Interior of Test Vehicle for Test No. 469468-4-2. 73
Figure 5.16. Summary of Results for *MASH* Test 2-11 on TxDOT C411 Bridge Rail. 74
Figure 6.1. Overall Details of Round Wood Post W-Beam Guardrail. 81
Figure 6.2. Round Wood Post W-Beam Guardrail prior to Testing. 82
Figure 6.3. Target CIP for *MASH* Test 3-11 on the Round Wood Post W-Beam Guardrail. 83
Figure 6.4. Round Wood Post W-Beam Guardrail/Test Vehicle Geometrics for Test No. 469468-5-1. 83
Figure 6.5. Test Vehicle before Test No. 469468-5-1 84
Figure 6.6. Round Wood Post W-Beam Guardrail/Test Vehicle after Test No. 469468-5-1. 85
Figure 6.7. Upstream Terminal after Test No. 469468-5-1 85
Figure 6.8. Posts 11 through 17 after Test No. 469468-5-1. 86
Figure 6.9. Round Wood Post W-Beam Guardrail after Test No. 469468-5-1. 87

LIST OF FIGURES (CONTINUED)

Page

Figure 6.10. Test Vehicle after Test No. 469468-5-1. 87
Figure 6.11. Interior of Test Vehicle for Test No. 469468-5-1. 88
Figure 6.12. Summary of Results for *MASH* Test 3-11 on Round Wood Post W-Beam Guardrail. 89
Figure 7.1. Overall Details of TxDOT 42-inch Single Slope Concrete Median Barrier with Light Pole. 94
Figure 7.2. TxDOT 42-Inch Single Slope Concrete Median Barrier with Light Pole prior to Testing. 95
Figure 7.3. TxDOT 42-Inch Single Slope Concrete Median Barrier with Light Pole/Test Vehicle Geometrics for Test No. 469468-6-1. 96
Figure 7.4. Test Vehicle before Test No. 469468-6-1. 97
Figure 7.5. TxDOT 42-Inch Single Slope Concrete Median Barrier with Light Pole/Test Vehicle after Test No. 469468-6-1. 98
Figure 7.6. TxDOT 42-Inch Single Slope Concrete Median Barrier after Test No. 469468-6-1. 98
Figure 7.7. Light Pole after Test No. 469468-6-1. 99
Figure 7.8. Test Vehicle after Test No. 469468-6-1. 100
Figure 7.9. Interior of Test Vehicle after Test No. 469468-6-1. 100
Figure 7.10. Summary of Results for *MASH* Test 5-12 on TxDOT 42-Inch Single Slope Concrete Median Barrier with Light Pole. 101
Figure 8.1. Overall Details of Skid-Mounted Single Perforated Steel Tube Temporary Sign Support System. 106
Figure 8.2. Skid-Mounted Single Perforated Steel Tube Temporary Sign Support System prior to Testing. 108
Figure 8.3. Skid-Mounted Single Perforated Steel Tube Temporary Sign Support System/Test Vehicle Geometrics for Test No. 468469-7-1. 109
Figure 8.4. Test Vehicle before Test No. 468469-7-1. 109
Figure 8.5. Skid-Mounted Single Perforated Steel Tube Temporary Sign Support System after Test No. 469468-7-1. 111
Figure 8.6. Test Vehicle after Test No. 469468-7-1. 112
Figure 8.7. Interior of Test Vehicle for Test No. 469468-7-1. 112
Figure 8.8. Summary of Results for *MASH* Test 3-72 at 0° on Skid-Mounted Single Perforated Steel Tube Temporary Sign Support System. 113
Figure 8.9. Skid-Mounted Single Perforated Steel Tube Temporary Sign Support System/Test Vehicle Geometrics for Test No. 468469-7-2. 115
Figure 8.10. Test Vehicle before Test No. 468469-7-2. 116
Figure 8.11. Skid-Mounted Single Perforated Steel Tube Temporary Sign Support System after Test No. 469468-7-2. 117
Figure 8.12. Test Vehicle after Test No. 469468-7-2. 118
Figure 8.13. Interior of Test Vehicle after Test No. 469468-7-2. 118
Figure 8.14. Summary of Results for *MASH* Test 3-72 at 90° on Skid-Mounted Single Perforated Steel Tube Temporary Sign Support System. 120

LIST OF FIGURES (CONTINUED)

Page

Figure 9.1. Mailbox Geometrics with 2270P Pickup Truck *(11).* 123
Figure 9.2. Details of Single Mailbox with Recycled Rubber Support Post in Type 4 Foundation. 125
Figure 9.3. Single Mailbox with Recycled Rubber Support Post in Type 4 Foundation prior to Testing. 126
Figure 9.4. Single Mailbox with Recycled Rubber Support Post in Type 4 Foundation/Test Vehicle Geometrics for Test No. 468469-8-1. 127
Figure 9.5. Test Vehicle before Test No. 468469-8-1 127
Figure 9.6. Single Mailbox with Recycled Rubber Support Post in Type 4 Foundation after Test No. 469468-8-1. 128
Figure 9.7. Test Vehicle after Test No. 469468-8-1. 129
Figure 9.8. Interior of Test Vehicle for Test No. 469468-8-1. 129
Figure 9.9. Summary of Results for *MASH* Test 3-61 on Single Mailbox with Recycled Rubber Support Post in Type 4 Foundation. 131
Figure 9.10. Details of Double Mailbox with Thin-Wall Galvanized Support Post in Type 4 Foundation. 134
Figure 9.11. Double Mailbox with Thin-Wall Galvanized Support Post in Type 4 Foundation prior to Testing. 135
Figure 9.12. Double Mailbox with Thin-Wall Galvanized Support Post in Type 4 Foundation/Test Vehicle Geometrics for Test No. 468469-8-2. 136
Figure 9.13. Test Vehicle before Test No. 468469-8-1 136
Figure 9.14. Double Mailbox with Thin-Wall Galvanized Support in Type 4 Foundation after Test No. 469468-8-2 137
Figure 9.15. Test Vehicle after Test No. 469468-8-2. 138
Figure 9.16. Interior of Test Vehicle for Test No. 469468-8-1. 138
Figure 9.17. Summary of Results for *MASH* Test 3-61 on Double Mailbox with Thin-Wall Galvanized Support in Type 4 Foundation. 140
Figure 9.18. Details of Multiple Mailboxes with Multi-Mount Support in Type 4 Foundation. 144
Figure 9.19. Multiple Mailboxes with Multi-Mount Support in Type 4 Foundation prior to Testing. 145
Figure 9.20. Multiple Mailboxes with Multi-Mount Support in Type 4 Foundation/Test Vehicle Geometrics for Test No. 468469-8-3 146
Figure 9.21. Test Vehicle before Test No. 468469-8-3 146
Figure 9.22. Multiple Mailboxes with Multi-Hanger Support in Type 4 Foundation after Test No. 469468-8-3. 147
Figure 9.23. Test Vehicle after Test No. 469468-8-1. 148
Figure 9.24. Interior of Test Vehicle for Test No. 469468-8-1. 148
Figure 9.25. Summary of Results for *MASH* Test 3-61 on Multiple Mailboxes with Multi-Mount Support in Type 4 Foundation. 150
Figure 9.26. Details of Single Molded Plastic Mailmaster® Mailbox with Wood Support Post in Type 5 Foundation. 153

LIST OF FIGURES (CONTINUED)

Page

Figure 9.27. Single Molded Plastic Mailmaster® Mailbox with Wood Support Post in Type 5 Foundation prior to Testing. 154
Figure 9.28. Single Molded Plastic Mailmaster® Mailbox with Wood Support Post in Type 5 Foundation/Test Vehicle Geometrics for Test No. 468469-8-4. 155
Figure 9.29. Test Vehicle before Test No. 468469-8-4..... 155
Figure 9.30. Single Molded Plastic Mailmaster® Mailbox with Wood Support in Type 5 Foundation after Test No. 469468-8-4..... 156
Figure 9.31. Test Vehicle after Test No. 469468-8-4. 157
Figure 9.32. Interior of Test Vehicle for Test No. 469468-8-4..... 157
Figure 9.33. Summary of Results for *MASH* Test 3-61 on Single Molded Plastic Mastermail® Mailbox with Wood Support in Type 5 Foundation..... 159
Figure 10.1. Overall Details of Skid-Mounted Dual Wood Post Temporary Sign Support System. 164
Figure 10.2. Skid-Mounted Dual Wood Post Temporary Sign Support System prior to Testing..... 167
Figure 10.3. Skid-Mounted Dual Wood Post Temporary Sign Support System/Test Vehicle Geometrics for Test No. 469468-9-1..... 168
Figure 10.4. Test Vehicle before Test No. 469468-9-1..... 168
Figure 10.5. Skid-Mounted Dual Wood Post Temporary Sign Support System after Test No. 469468-9-1. 170
Figure 10.6. Test Vehicle after Test No. 469468-9-1. 171
Figure 10.7. Summary of Results for *MASH* Test 3-72 at 90° on Skid-Mounted Dual Wood Post Temporary Sign Support System. 172
Figure 11.1. Details of MBGF in Rocky Terrain. 176
Figure 11.2. MBGF in Rocky Terrain prior to Testing. 178
Figure 11.3. Target CIP for *MASH* TL-3 Tests on MBGF in Rocky Terrain. 179
Figure 11.4. MBGF in Rocky Terrain/Test Vehicle Geometrics for Test No. 469468-10-2. 180
Figure 11.5. Test Vehicle before Test No. 469468-10-2..... 180
Figure 11.6. Posts 13 through 20 after Test No. 469468-10-2. 182
Figure 11.7. Test Vehicle after Test No. 469468-10-2. 183
Figure 11.8. Interior of Test Vehicle after Test No. 469468-10-2. 183
Figure 11.9. Summary of Results for *MASH* Test 3-10 on MBGF in Rocky Terrain..... 185
Figure 11.10. MBGF in Rocky Terrain/Test Vehicle Geometrics for Test No. 469468-10-1. 187
Figure 11.11. Test Vehicle before Test No. 469468-10-1..... 188
Figure 11.12. Posts 13 through 20 after Test No. 469468-10-1. 190
Figure 11.13. Upstream Terminal after Test No. 469468-10-1..... 191
Figure 11.14. Test Vehicle after Test No. 469468-10-1. 191
Figure 11.15. Interior of Test Vehicle for Test No. 469468-10-1. 191
Figure 11.16. Summary of Results for *MASH* Test 3-11 on MBGF with Steel Posts in Rocky Terrain. 193

LIST OF FIGURES (CONTINUED)

Page

Figure 12.1. Details of Round Post Guardrail in Rocky Terrain. 198
Figure 12.2. MBGF With Round Wood Posts in Rocky Terrain prior to Testing. 200
Figure 12.3. Target CIP for *MASH* TL-3 Tests on MBGF with Round Wood Posts in Rocky Terrain. 201
Figure 12.4. Round Post Guardrail/Test Vehicle Geometrics for Test No. 469468-12-1. 202
Figure 12.5. Test Vehicle before Test No. 469468-12-1. 202
Figure 12.6. MBGF with Round Wood Posts in Rocky Terrain after Test No. 469468-12-1. 204
Figure 12.7. Ruptured Guardrail after Test No. 469468-12-1. 205
Figure 12.8. Test Vehicle after Test No. 469468-12-1. 206
Figure 12.9. Interior of Test Vehicle for Test No. 469468-12-1. 206
Figure 12.10. Summary of Results for *MASH* Test 3-11 on MBGF with Round Wood Posts in Rocky Terrain. 208

LIST OF TABLES

Page

Table 2.1. Events during Test No. 469468-1-1. 8
Table 2.2. Occupant Risk Factors for Test No. 469468-1-1. 11
Table 2.3. Performance Evaluation Summary for *MASH* Test 4-10 on the TxDOT C402 Bridge Rail. 13
Table 2.4. Events during Test No. 469468-1-2. 15
Table 2.5. Occupant Risk Factors for Test No. 469468-1-2. 18
Table 2.6. Performance Evaluation Summary for *MASH* Test 4-11 on the TxDOT C402 Bridge Rail. 20
Table 2.7. Events during Test No. 469468-1-3. 22
Table 2.8. Occupant Risk Factors for Test No. 469468-1-3. 25
Table 2.9. Performance Evaluation Summary for *MASH* Test 4-12 on the TxDOT C402 Bridge Rail. 27
Table 2.10. Assessment Summary for *MASH* TL-4 Tests on TxDOT C402 Bridge Rail. 28
Table 3.1. Events during Test No. 469468-2-1. 33
Table 3.2. Occupant Risk Factors for Test No. 469468-2-1. 36
Table 3.3. Performance Evaluation Summary for *MASH* Test 5-12 on TxDOT C412 Bridge Rail. 39
Table 4.1. Events during Test No. 469468-3-1. 45
Table 4.2. Occupant Risk Factors for Test No. 469468-3-1. 48
Table 4.3. Performance Evaluation Summary for *MASH* Test 2-10 on the TxDOT C411 Bridge Rail. 50
Table 4.4. Events during Test No. 469468-3-2. 52
Table 4.5. Occupant Risk Factors for Test No. 469468-3-2. 55
Table 4.6. Performance Evaluation Summary for *MASH* Test 2-11 on TxDOT C411 Bridge Rail 57
Table 4.7. Assessment Summary for *MASH* TL-2 Tests on TxDOT C411 Bridge Rail. 58
Table 5.1. Events during Test No. 469468-4-1. 63
Table 5.2. Occupant Risk Factors for Test No. 469468-4-1. 66
Table 5.3. Performance Evaluation Summary for *MASH* Test 3-10 on the TxDOT T1W Bridge Rail. 68
Table 5.4. Events during Test No. 469468-4-2. 70
Table 5.5. Occupant Risk Factors for Test No. 469468-4-2. 73
Table 5.6. Performance Evaluation Summary for *MASH* Test 3-11 on TxDOT T1W Bridge Rail. 76
Table 5.7. Assessment Summary for *MASH* TL-3 Tests on TxDOT T1W Bridge Rail. 77
Table 6.1. Events during Test No. 469468-5-1. 84
Table 6.2. Occupant Risk Factors for Test No. 469468-5-1. 88
Table 6.3. Performance Evaluation Summary for *MASH* Test 3-11 on Round Wood Post W-Beam Guardrail. 91

LIST OF TABLES (CONTINUED)

Page

Table 7.1. Events during Test No. 469468-6-1. 97
Table 7.2. Occupant Risk Factors for Test No. 469468-6-1. 100
Table 7.3. Performance Evaluation Summary for *MASH* Test 5-12 on TxDOT 42-inch Single Slope Concrete Median Barrier with Light Pole. 103
Table 8.1. Events during Test No. 469468-7-1. 110
Table 8.2. Performance Evaluation Summary for *MASH* Test 3-72 at 0° on Skid-Mounted Single Perforated Steel Tube Temporary Sign Support System. 114
Table 8.3. Events during Test No. 469468-7-2. 116
Table 8.4. Performance Evaluation Summary for *MASH* Test 3-72 at 90° on Skid-Mounted Single Perforated Steel Tube Temporary Sign Support System. 121
Table 8.5. Performance Evaluation Summary for *MASH* Test 3-72 on Skid-Mounted Single Perforated Steel Tube Temporary Sign Support System. 122
Table 9.1. Events during Test No. 469468-8-1. 127
Table 9.2. Occupant Risk Factors for Test No. 469468-8-1. 130
Table 9.3. Performance Evaluation Summary for *MASH* Test 3-61 on Single Mailbox with Recycled Rubber Support Post in Type 4 Foundation. 132
Table 9.4. Events during Test No. 469468-8-2. 137
Table 9.5. Occupant Risk Factors for Test No. 469468-8-2. 139
Table 9.6. Performance Evaluation Summary for *MASH* Test 3-61 on Double Mailbox with Thin-Wall Galvanized Support in Type 4 Foundation. 141
Table 9.7. Events during Test No. 469468-8-3. 146
Table 9.8. Occupant Risk Factors for Test No. 469468-8-3. 149
Table 9.9. Performance Evaluation Summary for *MASH* Test 3-61 on Multiple Mailboxes with Multi-Mount Support in Type 4 Foundation. 151
Table 9.10. Events during Test No. 469468-8-4. 155
Table 9.11. Occupant Risk Factors for Test No. 469468-8-4. 158
Table 9.12. Performance Evaluation Summary for *MASH* Test 3-61 on Single Molded Plastic Mailmaster® Mailbox with Wood Support Post in Type 4 Foundation. 160
Table 9.13. Assessment Summary for Mailbox Tests. 162
Table 10.1. Events during Test No. 469468-9-1. 169
Table 10.2. Performance Evaluation Summary for *MASH* Test 3-72 at 90° on Skid-Mounted Dual Wood Post Temporary Sign Support System. 174
Table 11.1. Events during Test No. 469468-10-2. 181
Table 11.2. Occupant Risk Factors for Test No. 469468-10-2. 184
Table 11.3. Performance Evaluation Summary for *MASH* Test 3-11 on MBGF with Steel Posts in Rocky Terrain. 186
Table 11.4. Events during Test No. 469468-10-1. 188
Table 11.5. Occupant Risk Factors for Test No. 469468-10-1. 192
Table 11.6. Performance Evaluation Summary for *MASH* Test 3-11 on MBGF with Steel Posts in Rocky Terrain. 194

LIST OF FIGURES (CONTINUED)

Page

Table 11.7. Assessment Summary for *MASH* TL-3 Tests on TxDOT MBGF with W6×8.5 Steel Posts in Rocky Terrain. 195
Table 12.1. Events during Test No. 469468-12-1. 203
Table 12.2. Occupant Risk Factors for Test No. 469468-12-1. 207
Table 12.3. Performance Evaluation Summary for *MASH* Test 3-11 on MBGF with Round Wood Posts in Rocky Terrain. 209

CHAPTER 1:
INTRODUCTION

Since the 1940s, the United States has been crash testing highway safety appurtenances. National guidelines for testing roadside appurtenances originated in 1962. Guidelines for testing and evaluating the impact performance of roadside safety features are periodically updated to stay current with improvements in technology and changes in the vehicle fleet and impact conditions. In 2009, the American Association of State Highway and Transportation Officials (AASHTO) published the *Manual for Assessing Safety Hardware* (*MASH*), which supersedes the previous crash test and evaluation guidelines (*1*). Changes incorporated into *MASH* include new design test vehicles, revised test matrices, and revised impact conditions.

A *MASH* implementation agreement was jointly developed and adopted by the Federal Highway Administration (FHWA) and AASHTO. It establishes various implementation dates for different categories of roadside safety features. On projects let after the specified dates, only *MASH* compliant hardware is eligible for new installations on the National Highway System.

In response to the implementation requirements, Texas Department of Transportation (TxDOT) Bridge, Design, Maintenance, and Traffic Operations Divisions reviewed their standards for roadside safety devices and identified those devices that require testing and evaluation to assess *MASH* compliance. Under this project, a total of 33 roadside safety systems will be crash tested in accordance with *MASH* criteria in three phases over a three-year period.

The Texas A&M Transportation Institute (TTI) crash tested and evaluated 10 devices in Phase I, which included the following:

- 36-inch vertical parapet bridge rail.
- 1-inch asphalt concrete pavement lateral support for concrete median barrier.
- Pinning pattern for precast concrete barrier on concrete.
- Single and dual embedded wood post sign support systems.
- Pedestal pole with flashing beacons with and without solar assembly.
- Multi-mailbox system on TxDOT Type 1 foundation and thin walled galvanized tube support.
- Double mailbox system on TxDOT Type 2 foundation and thin walled galvanized tubing.
- Double mailbox system on TxDOT Type 3 foundation and winged channel support.

An additional 14 devices were crash tested and evaluated in Phase II. These included the following:

- C402 bridge rail.
- C412 bridge rail.
- C411 bridge rail.
- T1W bridge rail.
- Guardrail with round wood posts.
- Concrete barrier at light post.
- Single post perforated square metal tubing skid.
- Mailbox Type 4 foundation (single)-recycled rubber post.
- Mailbox Type 4 foundation (double)-thin walled white post.
- Mailbox Type 4 foundation (multi)-Shurtite Multi Hanger.

- Mailbox Type 5 foundation (single)-wood post.
- Dual post wood skid.
- Guardrail Steel posts in rocky terrain.
- Round wood posts in rocky terrain.

TxDOT standards may include multiple configurations or variations of a device to accommodate different design considerations or needs. TTI researchers developed the test plan for each device based on consideration of critical or worst-case configuration. If a critical configuration is successfully crash tested, a less critical configuration of the device would also be considered *MASH* compliant. This approach reduces the required number of tests to achieve *MASH* compliance. The following chapters of this report provide details of the *MASH* testing of the different roadside safety systems evaluated under Phase II.

CHAPTER 2:
TXDOT C402 BRIDGE RAIL

2.1 BACKGROUND*

The T402 bridge rail consists of a tubular steel rail attached to fabricated steel posts mounted to a 24-inch tall concrete parapet. The only difference between the T402 and C402 rail is that the C402 incorporates a nominal 2-inch diameter steel pipe attached to the traffic face of the steel posts between the concrete parapet and tubular rail element to meet pedestrian code requirements.

TxDOT and TTI researchers consider the C402 bridge rail a more critical configuration than the T402 bridge rail. The 24-inch height of the concrete parapet is above the bumper height of a passenger car and captures most of the pickup truck bumper. Therefore, although some sheet metal contact will occur, substantial snagging of vehicle components on the steel posts is not a significant concern. Testing the C402 bridge rail evaluates the attachment of the pedestrian pipe rail to the posts and the splices between the pipe sections to determine if there is any separation and interaction with the impacting vehicle. If this more critical configuration meets *MASH* requirements, the less critical T402 bridge rail would also be considered *MASH* compliant.

The C402 bridge rail was fabricated and installed by an outside subcontractor under TTI Proving Ground's supervision. TTI had the rail constructed with the elliptical tubular steel rail option. The elliptical tubular steel rail is considered more critical than the rectangular tube option because of its narrower contact surface area. TTI Proving Ground tested and evaluated the rail's performance in accordance with *MASH* TL-4 requirements.

The full *MASH* test matrix was performed on this bridge rail system to fully evaluate any vehicle interaction or occupant contact with the steel rail components. The test matrix consisted of test designations 4-10 (small passenger car), 4-11 (pickup truck), and 4-12 (single unit truck). The target CIPs selected for the tests were determined according to information provided in *MASH* Sections 2.2.1 and 2.3.2 and Tables 2-7 and 2-8. Figure 2.1 shows the results.

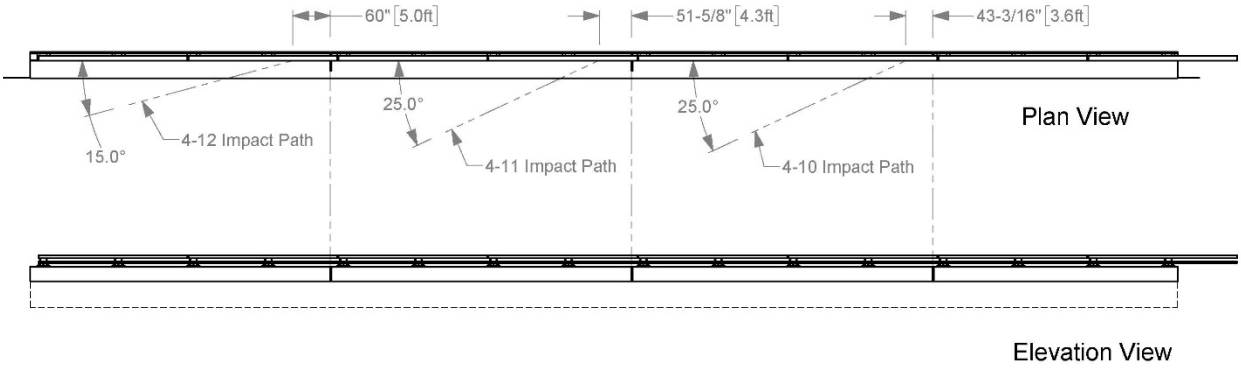

Figure 2.1. Target CIPs for *MASH* TL-4 on TxDOT C402 Bridge Rail.

* The opinions/interpretations identified/expressed in Section 2.1 are outside the scope of TTI Proving Ground's A2LA Accreditation.

2.2 SYSTEM DETAILS

2.2.1 Test Article Design and Construction

The C402 test installation consisted of a 153-ft long reinforced concrete cantilevered deck and parapet with integral steel posts and rails secured to the top of the parapet. The post spacing was 10 ft. The height from the road surface to the top of the parapet was 24 inches, and the overall height to the top of the steel rail was 42 inches. There were three 2-inch wide joints formed in the concrete parapet corresponding with the selected critical impact points. One joint was in the parapet only for geometric evaluation of the passenger car during Test 4-10 (the 1100C test location). The other two joints extended through both the parapet and deck to provide evaluation of both rail geometry and structural adequacy during Tests 4-11 and 4-12. The test installation also incorporated 2-inch wide joints in both the elliptical steel traffic rail and pedestrian pipe rail near the concrete joints based on TxDOT standards. Steel sleeves were inserted into the steel rail members to provide structural continuity across the joints.

Figure 2.2 presents overall information on the TxDOT C402 bridge rail test installation, and Figure 2.3 provides photographs of the installation. Appendix A.1 provides further details of the TxDOT C402 bridge rail installation.

2.2.2 Material Specifications

Appendix A.2 provides material certification documents for the materials used to install/construct the TxDOT C402 bridge rail.

2.3 *MASH* TEST 4-10 (CRASH TEST NO. 469468-1-1)

2.3.1 Test Designation and Actual Impact Conditions

MASH Test 4-10 involves an 1100C vehicle weighing 2420 lb ±55 lb impacting the CIP of the longitudinal barrier at an impact speed of 62 mi/h ±2.5 mi/h and an angle of 25° ±1.5°. The target CIP for *MASH* Test 4-10 on the TxDOT C402 bridge rail was 3.6 ft ±1 ft upstream of the last open joint in the parapet (see Figure 5.1).

The 2010 Kia Rio* used in the test weighed 2425 lb, and the actual impact speed and angle were 62.6 mi/h and 25.0°, respectively. The actual impact point was 3.8 ft upstream of the last open joint in the parapet near post 13. Minimum target impact severity (IS) was 51 kip-ft, and actual IS was 57 kip-ft.

2.3.2 Weather Conditions

The test was performed on the morning of May 17, 2018. Weather conditions at the time of testing were as follows: wind speed: 1 mi/h; wind direction: 122° (vehicle was traveling in a northwesterly direction); temperature: 85°F; relative humidity: 64 percent.

* The 2010 model vehicle used is older than the 6-year age noted in *MASH*, and was selected based upon availability. An older model vehicle is permitted by AASHTO as long as it is otherwise *MASH* compliant. Other than the vehicle's year model, this 2010 model vehicle met the *MASH* requirements.

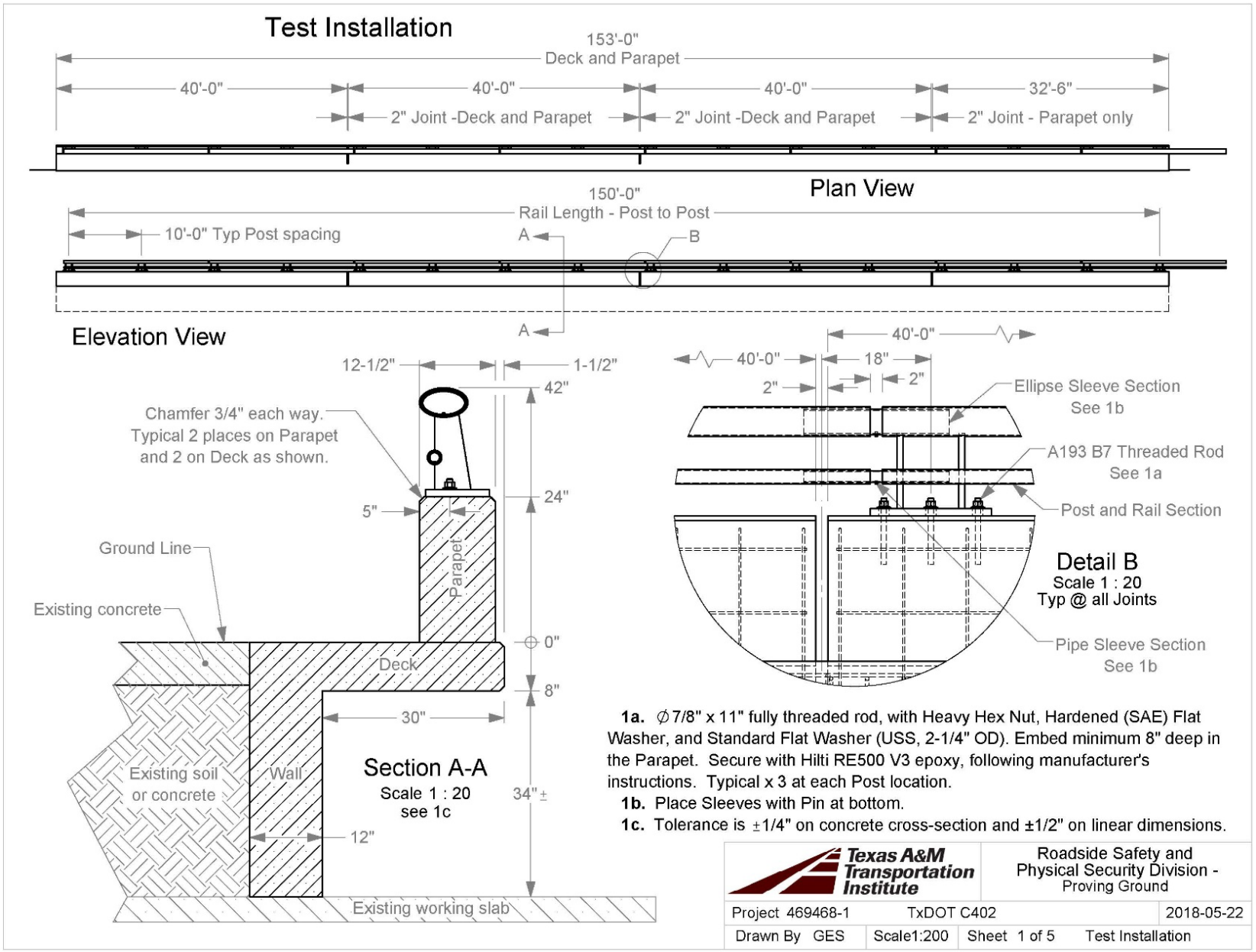

Figure 2.2. Overall Details of TxDOT C402 Bridge Rail.



Figure 2.3. TxDOT C402 Bridge Rail prior to Testing.

2.3.3 Test Vehicle

Figures 2.4 and 2.5 show the 2010 Kia Rio used for the crash test. The vehicle's test inertia weight was 2425 lb, and its gross static weight was 2590 lb. The height to the lower edge of the vehicle bumper was 7.75 inches, and height to the upper edge of the bumper was 21.5 inches. Table A.1 in Appendix A.3.1 gives additional dimensions and information on the vehicle. The vehicle was directed into the installation using a cable reverse tow and guidance system, and was released to be freewheeling and unrestrained just prior to impact.



Figure 2.4. TxDOT C402 Bridge Rail/Test Vehicle Geometrics for Test No. 469468-1-1.



Figure 2.5. Test Vehicle before Test No. 469468-1-1.

2.3.4 Test Description

The test vehicle impacted the TxDOT C402 bridge rail 3.8 ft upstream of the last open joint in the parapet at a speed of 62.6 mi/h and an angle of 25.0°. Table 2.1 lists events that occurred during Test No. 469468-1-1. Figures A.1 and A.2 in Appendix A.3.2 present sequential photographs during the test.

For longitudinal barriers, it is desirable that the vehicle redirects and exits the barrier within the exit box criteria (not less than 32.8 ft downstream from impact for cars and pickups). The 1100C vehicle exited within the exit box criteria defined in *MASH*. After loss of contact with the barrier, the vehicle yawed counterclockwise and came to rest 145 ft downstream of the point of impact and 17 ft toward traffic lanes.

Table 2.1. Events during Test No. 469468-1-1.

TIME (s)	EVENTS
0.000	Left front corner of vehicle bumper contacts bridge rail
0.024	Vehicle begins to redirect
0.028	Roof begins to deform above left front door
0.044	Left front corner of bumper contacts post 13
0.060	Hood begins to deform
0.067	Left corner of deformed hood contacts and breaks lower left corner of windshield
0.069	Dummy's shoulder contacts left door window glass
0.075	Left door window glass shatters
0.160	Vehicle becomes parallel with bridge rail
0.168	Rear bumper contacts rail
0.294	Vehicle loses contact with bridge rail while traveling at 50.2 mi/h and trajectory/heading angles of 6.5°/9.5°, respectively

2.3.5 Damage to Test Installation

Figure 2.6 shows the damage to the TxDOT C402 bridge rail. Cracks in the parapet and deck are marked in red in Figure 2.5. On the traffic face of the parapet, there was a crack 32 inches downstream of post 12. On the field side, the parapet was cracked 32 inches upstream of the parapet joint, and the deck was cracked at the downstream end of the parapet joint and radiated downstream and downward. Working width was 12.5 inches, and the height of maximum working width was 24.0 inches. Dynamic deflection of the rail could not be obtained because the view was obscured by the test vehicle. There was no measurable permanent deformation was observed.

2.3.6 Damage to Test Vehicle

Figure 2.7 shows the damage the vehicle sustained. The front bumper, hood, radiator and support, left front fender, left front tire and rim, left front strut, left front door and window glass, left rear door, left rear quarter panel, and left rear bumper were damaged. The windshield was shattered in the left lower corner from the hood being pushed toward the windshield. Maximum exterior crush to the vehicle was 8.0 inches in the side plane at the left front corner at bumper height. Maximum occupant compartment deformation was 2.5 inches in the driver side floor pan and firewall areas. Figure 2.8 shows the interior of the vehicle. Tables A.2 and A.3 in Appendix A.3.1 provide exterior crush and occupant compartment measurements.

2.3.7 Occupant Risk Factors

Data from the accelerometer, located at the vehicle center of gravity, were digitized for evaluation of occupant risk and results are shown in Table 2.2. Figure 2.9 summarizes these data and other pertinent information from the test. Figure A.3 in Appendix A.3.3 shows the vehicle angular displacements, and Figures A.4 through A.9 in Appendix A.3.4 show acceleration versus time traces.



Figure 2.6. TxDOT C402 Bridge Rail after Test No. 469468-1-1.



Figure 2.7. Test Vehicle after Test No. 469468-1-1.



Before Test After Test

Figure 2.8. Interior of Test Vehicle for Test No. 469468-1-1.

Table 2.2. Occupant Risk Factors for Test No. 469468-1-1.

Occupant Risk Factor	Value	Time
Occupant Impact Velocity (OIV)		
Longitudinal	**21.3 ft/s**	at 0.0694 s on left side of interior
Lateral	**32.2 ft/s**	
Ridedown Accelerations		
Longitudinal	**5.5 g**	0.0701–0.0801 s
Lateral	**9.7 g**	0.1850–0.1950 s
Theoretical Head Index Velocity (THIV)	**42.2 km/h** **11.7 m/s**	at 0.0678 s on left side of interior
Post Head Deceleration (PHD)	**9.9 g**	0.1850–0.1950 s
Acceleration Severity Index (ASI)	**2.76**	0.0398–0.0898 s
Maximum 50-ms Moving Average		
Longitudinal	**−12.1 g**	0.0233–0.0733 s
Lateral	**19.9 g**	0.0116–0.0616 s
Vertical	**−2.7 g**	0.0315–0.0815 s
Maximum Roll, Pitch, and Yaw Angles		
Roll	**12°**	0.3465 s
Pitch	**5°**	0.0681 s
Yaw	**43°**	0.6789 s

2.3.8 Assessment of Results

Table 2.3 assesses the test based on the applicable safety evaluation criteria for *MASH* Test 4-10.



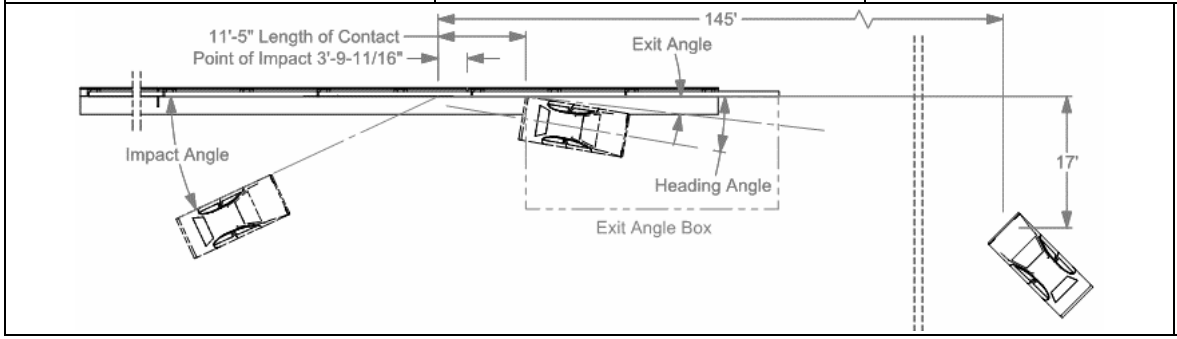

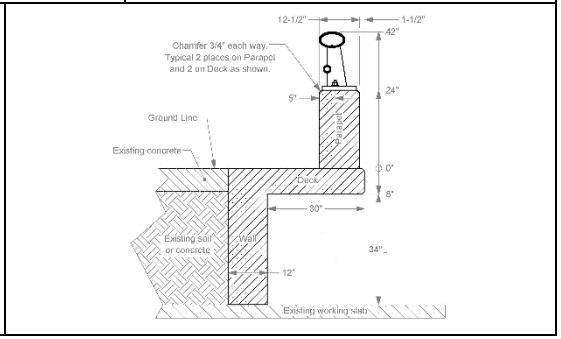

General Information
- Test Agency ..... Texas A&M Transportation Institute (TTI)
- Test Standard Test No. ..... *MASH* Test 4-10
- TTI Test No. 469668-1-1
- Test Date 2018-05-17

Test Article
- Type ..... Longitudinal Barrier – Bridge Rail
- Name ..... TxDOT C402 Bridge Rail
- Installation Length ..... 153 ft
- Material or Key Elements ... Concrete parapet 12½ inches wide, 24 inches tall, with steel rail mounted on top for total height of 42 inches

Soil Type and Condition ..... Concrete Deck, Damp

Test Vehicle
- Type/Designation 1100C
- Make and Model ..... 2010 Kia Rio
- Curb ..... 2451 lb
- Test Inertial ..... 2425 lb
- Dummy ..... 165 lb
- Gross Static ..... 2590 lb

Impact Conditions
- Speed ..... 62.6 mi/h
- Angle ..... 25.0°
- Location/Orientation ..... 3.8 ft upstream of joint

Impact Severity ..... 57 kip-ft

Exit Conditions
- Speed ..... 50.2 mi/h
- Trajectory/Heading Angle ... 6.5°/9.5°

Occupant Risk Values
- Longitudinal OIV ..... 21.3 ft/s
- Lateral OIV ..... 32.2 ft/s
- Longitudinal Ridedown ..... 5.5 g
- Lateral Ridedown ..... 9.7 g
- THIV ..... 42.2 km/h
- PHD ..... 9.9 g
- ASI 2.76

Max. 0.050-s Average
- Longitudinal ..... −12.1 g
- Lateral ..... 19.9 g
- Vertical ..... −2.7 g

Post-Impact Trajectory
- Stopping Distance ..... 145 ft downstream 17 ft toward traffic

Vehicle Stability
- Maximum Yaw Angle ..... 43°
- Maximum Pitch Angle ..... 5°
- Maximum Roll Angle ..... 12°
- Vehicle Snagging ..... No
- Vehicle Pocketing ..... No

Test Article Deflections
- Dynamic ..... None measurable
- Permanent ..... None measurable
- Working Width ..... 12.5 inches
- Height of Working Width ..... 24.0 inches

Vehicle Damage
- VDS 10LFQ3
- CDC 10FLEW3
- Max. Exterior Deformation ..... 8.0 inches
- OCDI LF0215100
- Max. Occupant Compartment Deformation ..... 2.5 inches

Figure 2.9. Summary of Results for *MASH* Test 4-10 on TxDOT C402 Bridge Rail.

Table 2.3. Performance Evaluation Summary for *MASH* Test 4-10 on the TxDOT C402 Bridge Rail.

Test Agency: Texas A&M Transportation Institute Test No.: 469468-1-1 Test Date: 2018-05-17

***MASH* Test 4-10 Evaluation Criteria**	**Test Results**	**Assessment**
Structural Adequacy		
A. Test article should contain and redirect the vehicle or bring the vehicle to a controlled stop; the vehicle should not penetrate, underride, or override the installation although controlled lateral deflection of the test article is acceptable	The TxDOT C402 contained and redirected the 1100C vehicle. The vehicle did not penetrate, underride, or override the installation. Maximum dynamic deflection during the test was not obtainable due to vehicle obstruction of view.	Pass
Occupant Risk		
D. Detached elements, fragments, or other debris from the test article should not penetrate or show potential for penetrating the occupant compartment, or present an undue hazard to other traffic, pedestrians, or personnel in a work zone.	No detached elements, fragments, or other debris from the test article were present to penetrate or show potential for penetrating the occupant compartment or to present hazard to others in the area.	Pass
Deformations of, or intrusions into, the occupant compartment should not exceed limits set forth in Section 5.3 and Appendix E of MASH.	Maximum occupant compartment deformation was 2.5 inches in the driver side floor pan and firewall areas.	
F. The vehicle should remain upright during and after collision. The maximum roll and pitch angles are not to exceed 75 degrees.	The 1100C vehicle remained upright during and after the collision event. Maximum roll was 12° and maximum pitch was 5°.	Pass
H. Longitudinal and lateral occupant impact velocities should fall below the preferred value of 30 ft/s, or at least below the maximum allowable value of 40 ft/s.	Longitudinal OIV was 21.3 ft/s, and lateral OIV was 32.2 ft/s.	Pass
I. Longitudinal and lateral occupant ridedown accelerations should fall below the preferred value of 15.0 g, or at least below the maximum allowable value of 20.49 g.	Maximum longitudinal 10-ms occupant ridedown acceleration was 5.5 g, and maximum lateral 10-ms occupant ridedown acceleration was 9.7 g.	Pass
Vehicle Trajectory For redirective devices, it is preferable that the vehicle be smoothly redirected and leave the barrier within the exit box criteria (not less than 32.8 ft for the 1100C and 2270P vehicles) and should be documented.	The 1100C vehicle exited within the exit box criteria.	Documentation only

2.4 *MASH* TEST 4-11 (CRASH TEST NO. 469468-1-2)

2.4.1 Test Designation and Actual Impact Conditions

MASH Test 4-11 involves a 2270P vehicle weighing 5000 lb ±110 lb impacting the CIP of the longitudinal barrier at an impact speed of 62 mi/h ±2.5 mi/h and an angle of 25° ±1.5°. The target CIP for *MASH* Test 4-11 on the TxDOT C402 bridge rail was 4.3 ft ±1 ft upstream of the second open joint in the deck and parapet (see Figure 5.1).

The 2012 Dodge RAM 1500 pickup truck used in the test weighed 4999 lb, and the actual impact speed and angle were 62.7 mi/h and 25.3°, respectively. The actual impact point was 4.7 ft upstream of the second open joint in the deck and parapet near post 9. Minimum target IS was 106 kip-ft, and actual IS was 120 kip-ft.

2.4.2 Weather Conditions

MASH Test 4-11 on the bridge rail was performed on the morning of May 15, 2018. Weather conditions at the time of testing were as follows: wind speed: 3 mi/h; wind direction: 284° (vehicle was traveling in a northwesterly direction); temperature: 80°F; relative humidity: 75 percent.

2.4.3 Test Vehicle

Figures 2.10 and 2.11 show the 2012 Dodge RAM 1500 pickup truck used for the crash test. The vehicle's test inertia weight was 4999 lb, and its gross static weight was 5164 lb. The height to the lower edge of the vehicle bumper was 11.75 inches, and the height to the upper edge of the bumper was 27.0 inches. The height to the vehicle's center of gravity was 28.0 inches. Tables A.4 and A.5 in Appendix A.4.1 give additional dimensions and information on the vehicle. The vehicle was directed into the installation using a cable reverse tow and guidance system, and was released to be freewheeling and unrestrained just prior to impact.



Figure 2.10. TxDOT C402 Bridge Rail/Test Vehicle Geometrics for Test No. 469468-1-2.



Figure 2.11. Test Vehicle before Test No. 469468-1-2.

2.4.4 Test Description

The test vehicle impacted the TxDOT C402 bridge rail 4.7 ft upstream of the second open joint in the deck and parapet at a speed of 62.7 mi/h and an angle of 25.3°. Table 2.4 lists events that occurred during Test No. 469468-1-2. Figures A.10 and A.11 in Appendix A.4.2 present sequential photographs during the test.

Table 2.4. Events during Test No. 469468-1-2.

TIME (s)	EVENTS
0.000	Left front corner of vehicle bumper contacts bridge rail
0.035	Vehicle begins to redirect
0.047	Right rear corner of hood contacts and shatters lower right corner of windshield
0.059	Vehicle reaches post 9
0.061	Left front door opens at top
0.670	Left rear corner of hood contacts and shatters lower left corner of windshield
0.085	Dummy's head contacts left door window glass
0.102	Left front door window glass frame begins to separate from door
0.122	Maximum extent of dummy's head outside of vehicle
0.185	Vehicle becomes parallel with the bridge rail
0.188	Rear of vehicle contacts bridge rail
0.342	Vehicle loses contact with bridge rail traveling at 47.5 mi/h and trajectory/heading angle of 8.8°/7.2°, respectively

For longitudinal barriers, it is desirable that the vehicle redirects and exits the barrier within the exit box criteria (not less than 32.8 ft downstream from impact for cars and pickups). The 2270P vehicle exited within the exit box criteria defined in *MASH*. After loss of contact with the barrier, the vehicle yawed counterclockwise and came to rest 156 ft downstream of the point of impact and 7 ft toward traffic lanes.

2.4.5 Damage to Test Installation

Figure 2.12 shows the damage to the TxDOT C402 bridge rail. There was minimal deflection of the lower steel pedestrian rail and some concrete surface spalling on the field side of post 9. Working width was 16.5 inches, and the height of maximum working width was 46.0 inches. Maximum dynamic deflection was 1.1 inches, and no permanent deformation was observed in the metal rail elements.



Figure 2.12. TxDOT C402 Bridge Rail after Test No. 469468-1-2.

2.4.6 Damage to Test Vehicle

Figure 2.13 shows the damage sustained by the vehicle. The front bumper, hood, grill, radiator and support, left front fender, left front tire and rim, left front door and window glass, left rear door, left rear exterior bed, left rear tire and rim, and left rear bumper were damaged. The windshield was shattered when the hood latch broke and the hood contacted the windshield. Maximum exterior crush to the vehicle was 10.0 inches in the side plane at the left front corner at bumper height. Maximum reduction of space in the occupant compartment was 1.0 inch in the driver side floor pan and kick panel areas. Figure 2.14 shows the interior of the vehicle. Tables A.6 and A.7 in Appendix A.4.1 provide exterior crush and occupant compartment measurements.

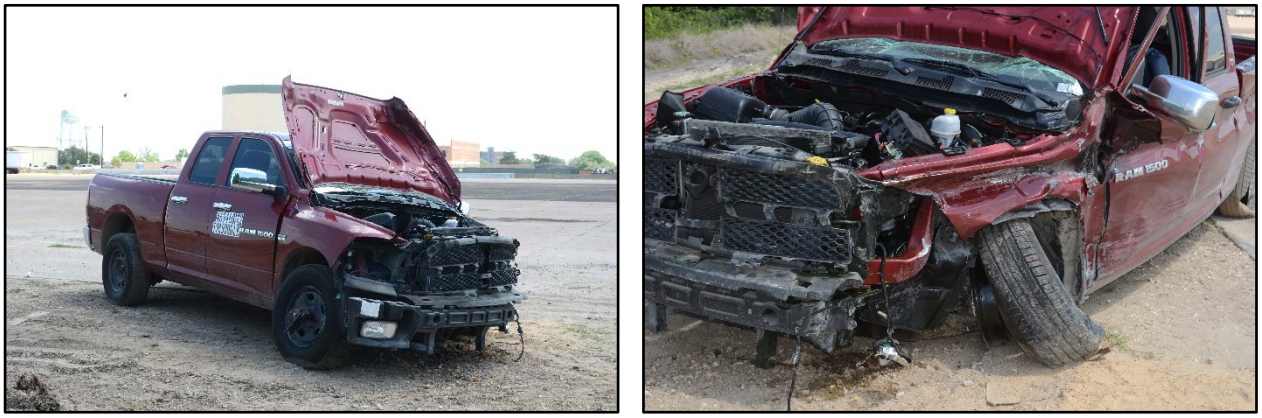

Figure 2.13. Test Vehicle after Test No. 469468-1-2.



Figure 2.14. Windshield and Interior of Test Vehicle after Test No. 469468-1-2.

2.4.7 Occupant Risk Factors

Data from the accelerometer, located at the vehicle center of gravity, were digitized for evaluation of occupant risk and results are shown in Table 2.5. Figure 2.15 summarizes these data and other pertinent information from the test. Figure A.12 in Appendix A.4.3 shows the

vehicle angular displacements, and Figures A.13 through A.18 in Appendix A.4.4 show acceleration versus time traces.

Table 2.5. Occupant Risk Factors for Test No. 469468-1-2.

Occupant Risk Factor	Value	Time
OIV		
Longitudinal	**19.7 ft/s**	at 0.0924 s on left side of interior
Lateral	**27.9 ft/s**	
Occupant Ridedown Accelerations		
Longitudinal	**6.9 g**	0.0957–0.1057 s
Lateral	**9.5 g**	0.2031–0.2131 s
THIV	**37.9 km/h** **10.5 m/s**	at 0.0898 s on left side of interior
PHD	**9.9 g**	0.2032–0.2132 s
ASI	**2.06**	0.0594–0.1094 s
Maximum 50-ms Moving Average		
Longitudinal	**−9.3 g**	0.0284–0.0784 s
Lateral	**16.0 g**	0.0346–0.0846 s
Vertical	**−4.3 g**	0.0078–0.0578 s
Maximum Roll, Pitch, and Yaw Angles		
Roll	**8°**	0.8503 s
Pitch	**4°**	0.0915 s
Yaw	**36°**	0.6172 s

2.4.8 Assessment of Results

Table 2.6 assesses the test based on the applicable safety evaluation criteria for *MASH* Test 4-11.

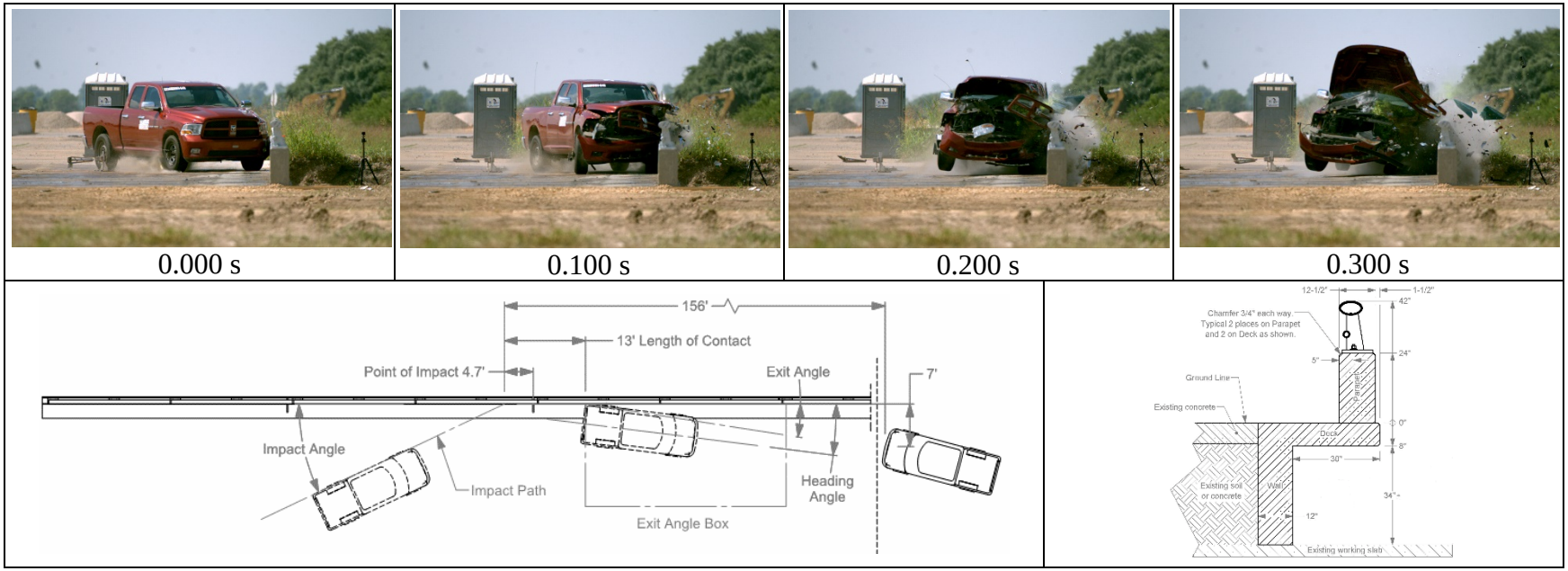

General Information
- Test Agency ..... Texas A&M Transportation Institute (TTI)
- Test Standard Test No. ..... *MASH* Test 4-11
- TTI Test No. 469668-1-2
- Test Date 2018-05-15

Test Article
- Type ..... Longitudinal Barrier – Bridge Rail
- Name ..... TxDOT C402 Bridge Rail
- Installation Length ..... 153 ft
- Material or Key Elements ... Concrete parapet 12½ inches wide, 24 inches tall, with steel rail mounted on top for total height of 42 inches

Soil Type and Condition ..... Concrete Deck, Damp

Test Vehicle
- Type/Designation 2270P
- Make and Model ..... 2012 Dodge RAM 1500 Pickup
- Curb ..... 4788 lb
- Test Inertial ..... 4999 lb
- Dummy ..... 165 lb
- Gross Static ..... 5164 lb

Impact Conditions
- Speed ..... 62.7 mi/h
- Angle ..... 25.3°
- Location/Orientation ..... 4.7 ft upstream of open joint

Impact Severity ..... 120 kip-ft

Exit Conditions
- Speed ..... 47.5 mi/h
- Trajectory/Heading Angle ... 8.8°/7.2°

Occupant Risk Values
- Longitudinal OIV ..... 19.7 ft/s
- Lateral OIV ..... 27.9 ft/s
- Longitudinal Ridedown ..... 6.9 g
- Lateral Ridedown ..... 9.5 g
- THIV ..... 37.9 km/h
- PHD ..... 9.9 g
- ASI 2.06

Max. 0.050-s Average
- Longitudinal ..... −9.3 g
- Lateral ..... 16.0 g
- Vertical ..... −4.3 g

Post-Impact Trajectory
- Stopping Distance ..... 156 ft downstream 7 ft toward traffic

Vehicle Stability
- Maximum Yaw Angle ..... 36°
- Maximum Pitch Angle ..... 4°
- Maximum Roll Angle ..... 8°
- Vehicle Snagging ..... No
- Vehicle Pocketing ..... No

Test Article Deflections
- Dynamic ..... 1.1 inches
- Permanent ..... None measurable
- Working Width ..... 16.5 inches
- Height of Working Width ..... 46.0 inches

Vehicle Damage
- VDS 11LFQ3
- CDC 11FLEW3
- Max. Exterior Deformation ..... 10.0 inches
- OCDI LF0100000
- Max. Occupant Compartment Deformation ..... 1.0 inch

Figure 2.15. Summary of Results for *MASH* Test 4-11 on TxDOT C402 Bridge Rail.

Table 2.6. Performance Evaluation Summary for *MASH* Test 4-11 on the TxDOT C402 Bridge Rail.

Test Agency: Texas A&M Transportation Institute Test No.: 469468-1-2 Test Date: 2018-05-15

***MASH* Test 4-11 Evaluation Criteria**	**Test Results**	**Assessment**
Structural Adequacy		
A. Test article should contain and redirect the vehicle or bring the vehicle to a controlled stop; the vehicle should not penetrate, underride, or override the installation although controlled lateral deflection of the test article is acceptable	The TxDOT C402 contained and redirected the 2270P vehicle. The vehicle did not penetrate, underride, or override the installation. Maximum dynamic deflection during the test was 1.1 inches.	Pass
Occupant Risk		
D. Detached elements, fragments, or other debris from the test article should not penetrate or show potential for penetrating the occupant compartment, or present an undue hazard to other traffic, pedestrians, or personnel in a work zone.	No detached elements, fragments, or other debris from the test article were present to penetrate or show potential for penetrating the occupant compartment or to present hazard to others in the area.	Pass
Deformations of, or intrusions into, the occupant compartment should not exceed limits set forth in Section 5.3 and Appendix E of MASH.	Maximum reduction of space in the occupant compartment was 1.0 inch in the driver side floor pan and kick panel areas.	
F. The vehicle should remain upright during and after collision. The maximum roll and pitch angles are not to exceed 75 degrees.	The 2270P vehicle remained upright during and after the collision event. Maximum roll was 8° and maximum pitch was 4°.	Pass
H. Longitudinal and lateral occupant impact velocities should fall below the preferred value of 30 ft/s, or at least below the maximum allowable value of 40 ft/s.	Longitudinal OIV was 19.7 ft/s, and lateral OIV was 27.9 ft/s.	Pass
I. Longitudinal and lateral occupant ridedown accelerations should fall below the preferred value of 15.0 g, or at least below the maximum allowable value of 20.49 g.	Maximum longitudinal 10-ms occupant ridedown acceleration was 6.9 g, and maximum lateral 10-ms occupant ridedown acceleration was 9.5 g.	Pass
Vehicle Trajectory For redirective devices, it is preferable that the vehicle be smoothly redirected and leave the barrier within the exit box criteria (not less than 32.8 ft for the 1100C and 2270P vehicles), and should be documented.	The 2270P vehicle exited within the exit box criteria.	Documentation only

2.5 *MASH* TEST 4-12 (CRASH TEST NO. 469468-1-3)

2.5.1 Test Designation and Actual Impact Conditions

MASH Test 4-12 involves a 10000S vehicle weighing 22,046 lb ±660 lb impacting the CIP of the longitudinal barrier at an impact speed of 56 mi/h ±2.5 mi/h and an angle of 15° ±1.5°. The target CIP for *MASH* Test 4-12 on the TxDOT C402 bridge rail was 5.0 ft ±1 ft upstream of the first open joint in the deck and parapet (see Figure 5.1).

The 2012 International 4300 single-unit truck used in the test weighed 22,060 lb, and the actual impact speed and angle were 56.9 mi/h and 15.0°, respectively. The actual impact point was 4.9 ft upstream of the first open joint in the deck and parapet near post 5. Minimum target IS was 142 kip-ft, and actual IS was 160 kip-ft.

2.5.2 Weather Conditions

MASH Test 4-12 on the bridge rail was performed on the morning of May 11, 2018. Weather conditions at the time of testing were as follows: wind speed: 15 mi/h; wind direction: 182° (vehicle was traveling in a northwesterly direction); temperature: 81°F; relative humidity: 68 percent.

2.5.3 Test Vehicle

Figures 2.16 and 2.17 show the 2012 International 4300 single-unit truck used for the crash test. The vehicle's test inertia weight was 22,060 lb, and its gross static weight was 22,060 lb. The height to the lower edge of the vehicle bumper was 21.0 inches, and height to the upper edge of the bumper was 35.0 inches. The height to the center of gravity of the ballast was 61.5 inches. Table A.8 in Appendix A.5.1 gives additional dimensions and information on the vehicle. The vehicle was directed into the installation using a cable reverse tow and guidance system, and was released to be freewheeling and unrestrained just prior to impact.



Figure 2.16. TxDOT C402 Bridge Rail/Test Vehicle Geometrics for Test No. 469468-1-3.



Figure 2.17. Test Vehicle before Test No. 469468-1-3.

2.5.4 Test Description

The test vehicle impacted the TxDOT C402 bridge rail 4.9 ft upstream of the first open joint in the deck and parapet at a speed of 56.9 mi/h and an angle of 15.0°. Table 2.7 lists events that occurred during Test No. 469468-1-3. Figures A.19 and A.20 in Appendix A.5.2 present sequential photographs during the test.

Table 2.7. Events during Test No. 469468-1-3.

TIME (s)	EVENTS
0.000	Left front corner of vehicle bumper contacts bridge rail
0.004	Left front tire contacts parapet face
0.040	Front tires begin to steer left
0.057	Left front bumper reaches joint in parapet and deck
0.101	Vehicle begins to redirect
0.268	Rear of vehicle contacts bridge rail
0.313	Vehicle becomes parallel with bridge rail
1.270	Vehicle loses contact with bridge rail (exit speed and angle not obtainable due to being out-of-view or obscured)

For longitudinal barriers, it is desirable that the vehicle redirects and exits the barrier within the exit box criteria (not less than 65.6 ft downstream from loss of contact for 10000S vehicles). The 10000S vehicle exited within the exit box criteria defined in *MASH*. After loss of contact with the barrier, the vehicle yawed counterclockwise and came to rest 319 ft downstream of the point of impact and 2 ft toward the field side.

2.5.5 Damage to Test Installation

Figure 2.18 shows the damage to the TxDOT C402 bridge rail. The bridge rail sustained concrete damage from post 4 to post 6, particularly on the traffic side at the top of the parapet upstream of the joint. A 14-ft long crack in the deck ran parallel with the rail starting from the joint and radiating upstream. Working width was 63.9 inches, and the height of maximum working width was 144.5 inches. Maximum dynamic deflection during the test was not

obtainable (vehicle obscured view), and maximum permanent deformation was so slight as to be unmeasurable.



Figure 2.18. TxDOT C402 Bridge Rail after Test No. 469468-1-3.

2.5.6 Damage to Test Vehicle

Figure 2.19 shows the damage sustained by the vehicle. The front bumper, hood, left door, front axle, left front U-bolts and springs, left front tire and rim, left fuel tank, left side of box, left battery box, and left rear outer tire and rim were damaged. Maximum exterior crush to the vehicle was 22.0 inches in the side plane at the left front corner at bumper height. No occupant compartment deformation occurred. Figure 2.20 shows the interior of the vehicle.



Figure 2.19. Test Vehicle after Test No. 469468-1-3.

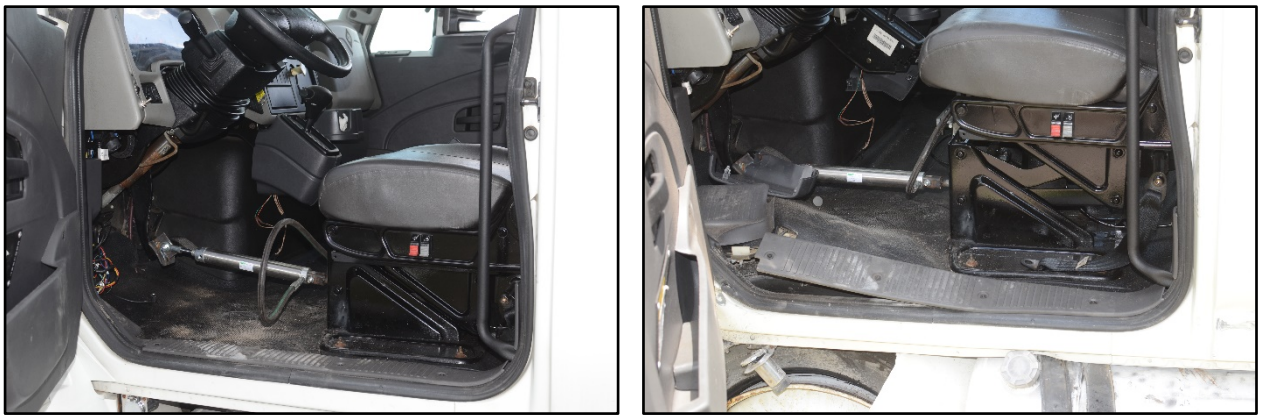

Before Test After Test

Figure 2.20. Interior of Test Vehicle for Test No. 469468-1-3.

2.5.7 Occupant Risk Factors

Occupant risk factors are not required for the test with the 10000S vehicle. Data from the accelerometers, located at the vehicle center of gravity, were digitized for information purposes only and results are shown in Table 2.8. Figure 2.21 summarizes these data and other pertinent information from the test. Figure A.21 in Appendix A.5.3 shows the vehicle angular displacements, and Figures A.22 through A.27 in Appendix A.5.4 show acceleration versus time traces.

2.5.8 Assessment of Results

Table 2.9 provides an assessment of the test based on the applicable safety evaluation criteria for *MASH* Test 4-12.

Table 2.8. Occupant Risk Factors for Test No. 469468-1-3.

Occupant Risk Factor	Value	Time
OIV		
Longitudinal	**7.5 ft/s**	at 0.2180 s on left side of interior
Lateral	**13.1 ft/s**	
Occupant Ridedown Accelerations		
Longitudinal	**4.6 g**	0.3194–0.3294 s
Lateral	**5.6 g**	0.2562–0.2662 s
THIV	**17.5 km/h** **4.9 m/s**	at 0.2116 s on left side of interior
PHD	**6.1 g**	0.2562–0.2662 s
ASI	**0.41**	0.1786–0.2286 s
Maximum 50-ms Moving Average		
Longitudinal	**−1.7 g**	0.0200–0.0700 s
Lateral	**3.6 g**	0.1531–0.2031 s
Vertical	**−3.1 g**	0.2700–0.3200 s
Maximum Roll, Pitch, and Yaw Angles		
Roll	**17°**	0.5335 s
Pitch	**18°**	1.1136 s
Yaw	**37°**	0.9571 s

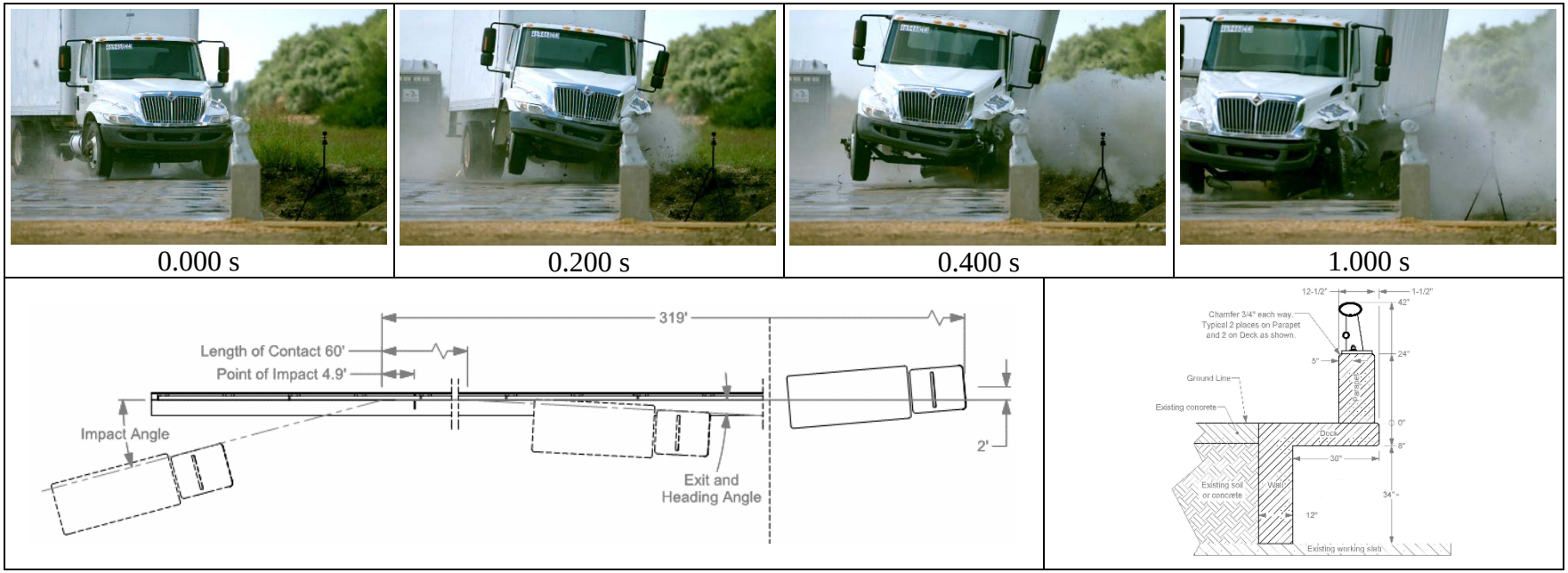

General Information
- Test Agency ..... Texas A&M Transportation Institute (TTI)
- Test Standard Test No. ..... *MASH* Test 4-12
- TTI Test No. 469668-1-3
- Test Date 2018-05-11

Test Article
- Type ..... Longitudinal Barrier – Bridge Rail
- Name ..... TxDOT C402 Bridge Rail
- Installation Length ..... 153 ft
- Material or Key Elements ... Concrete parapet 12½ inches wide, 24 inches tall, with steel rail mounted on top for total height of 42 inches

Soil Type and Condition ..... Concrete Deck, Damp

Test Vehicle
- Type/Designation 10000S
- Make and Model ..... 2012 International 4300 SUT
- Curb ..... 10,261 lb
- Test Inertial ..... 22,060 lb
- Dummy ..... No dummy
- Gross Static ..... 22,060 lb

Impact Conditions
- Speed ..... 56.9 mi/h
- Angle ..... 15.0°
- Location/Orientation ..... 4.9 ft upstream of open joint

Impact Severity ..... 160 kip-ft

Exit Conditions
- Speed ..... Not obtainable
- Angle ..... Not obtainable

Occupant Risk Values
- Longitudinal OIV ..... 7.5 ft/s
- Lateral OIV ..... 13.1 ft/s
- Longitudinal Ridedown ..... 4.6 g
- Lateral Ridedown ..... 5.6 g
- THIV ..... 17.5 km/h
- PHD ..... 6.1 g
- ASI 0.41

Max. 0.050-s Average
- Longitudinal ..... −1.7 g
- Lateral ..... 3.6 g
- Vertical ..... −3.1 g

Post-Impact Trajectory
- Stopping Distance ..... 319 ft downstream 2 ft twd field side

Vehicle Stability
- Maximum Yaw Angle ..... 37°
- Maximum Pitch Angle ..... 18°
- Maximum Roll Angle ..... 17°
- Vehicle Snagging ..... No
- Vehicle Pocketing ..... No

Test Article Deflections
- Dynamic ..... Not obtainable
- Permanent ..... Slight
- Working Width ..... 63.9 inches
- Vehicle Intrusion ..... 144.5 inches

Vehicle Damage
- VDS ..... NA
- CDC 11FDEW4
- Max. Exterior Deformation ..... 22.0 inches
- OCDI ..... NA
- Max. Occupant Compartment Deformation ..... None

Figure 2.21. Summary of Results for *MASH* Test 4-12 on TxDOT C402 Bridge Rail.

Table 2.9. Performance Evaluation Summary for *MASH* Test 4-12 on the TxDOT C402 Bridge Rail.

Test Agency: Texas A&M Transportation Institute Test No.: 469468-1-3 Test Date: 2018-05-11

***MASH* Test 4-12 Evaluation Criteria**	**Test Results**	**Assessment**
Structural Adequacy		
A. Test article should contain and redirect the vehicle or bring the vehicle to a controlled stop; the vehicle should not penetrate, underride, or override the installation although controlled lateral deflection of the test article is acceptable.	The TxDOT C402 contained and redirected the 10000S vehicle. The vehicle did not penetrate, underride, or override the installation. Maximum dynamic deflection during the test was not obtainable due to vehicle obstruction of view.	Pass
Occupant Risk		
D. Detached elements, fragments, or other debris from the test article should not penetrate or show potential for penetrating the occupant compartment, or present an undue hazard to other traffic, pedestrians, or personnel in a work zone.	No detached elements, fragments, or other debris from the test article were present to penetrate or show potential for penetrating the occupant compartment or to present hazard to others in the area.	Pass
Deformations of, or intrusions into, the occupant compartment should not exceed limits set forth in Section 5.3 and Appendix E of MASH.	No occupant compartment deformation occurred.	
G. It is preferable, although not essential, that the vehicle remain upright during and after collision.	The 10000S vehicle remained upright during and after the collision event. Maximum roll was 17°.	Pass
Vehicle Trajectory		
For redirective devices, it is preferable that the vehicle be smoothly redirected and leave the barrier within the exit box criteria (not less than 65.6 ft for the 10000S vehicle) and should be documented.	The 10000S vehicle exited within the exit box criteria.	Documentation only

2.6 CONCLUSIONS

The 1100C vehicle was contained and redirected. The hood of the vehicle was pushed into the windshield, which shattered, but did not penetrate or create excessive deformation into the occupant compartment. Maximum occupant compartment deformation was 2.5 inches in the driver side floor pan and firewall areas. The 1100C vehicle remained upright during and after the collision event. Occupant risk factors were within allowable limits.

The TxDOT C402 contained and redirected the 2270P vehicle. The hood of the vehicle was pushed into the windshield, which shattered, but did not penetrate or create excessive deformation into the occupant compartment. Maximum reduction of space in the occupant compartment was 1.0 inch in the driver side floor pan and kick panel areas. The 2270P vehicle remained upright during and after the test. Occupant risk factors were within the preferred limits.

The single-unit truck was successfully contained and redirected. The vehicle remained stable and upright as it came to a stop.

The TxDOT C402 bridge rail performed acceptably according to *MASH* TL-4 evaluation criteria as shown in Table 2.10.

Table 2.10. Assessment Summary for *MASH* TL-4 Tests on TxDOT C402 Bridge Rail.

Evaluation Factors	Evaluation Criteria	Test No. 469468-1-1	Test No. 469468-1-2	Test No. 469468-1-3
Structural Adequacy	A	S	S	S
Occupant Risk	D	S	S	S
	F	S	S	N/A
	G	N/A	N/A	S
	H	S	S	N/A
	I	S	S	N/A
	Test No.	***MASH* Test 4-10**	***MASH* Test 4-11**	***MASH* Test 4-12**
	Pass/Fail	Pass	Pass	Pass

S = Satisfactory
U = Unsatisfactory
N/A = Not Applicable

CHAPTER 3:
TXDOT C412 BRIDGE RAIL

3.1 BACKGROUND*

The TxDOT C412 bridge rail is an aesthetic concrete combination rail with windows designed to accommodate both vehicle and pedestrian traffic. Previously, it was successfully tested to *NCHRP Report 350* TL-4 under the name F411 (*2*). A variation of the C412 bridge rail was successfully tested to *MASH* TL-4 (*3*). TxDOT made changes to the reinforcement in the C412 rail to provide structural adequacy for *MASH* TL-5.

The TxDOT C412 bridge rail was constructed on site by a subcontractor under TTI Proving Ground supervision. The rail was tested and evaluated in accordance with *MASH* TL-5 criteria. Because a variation of the C412 bridge rail with similar geometry was successfully tested to *MASH* TL-4 (*3*), test designations 5-10 and 5-11 were deemed unnecessary by TxDOT and TTI researchers. Therefore, only *MASH* test designation 5-12 with an 80,000-lb tractor-van trailer was required to establish *MASH* TL-5 compliance.

3.2 TEST ARTICLE AND INSTALLATION DETAILS

The test installation was 119 ft-11½ inches long and consisted of a 42-inch tall reinforced concrete parapet mounted on an 8½-inch thick, 40-inch wide reinforced cantilevered concrete deck. The parapet was 17½ inches wide at top and bottom. A series of 12¼-inch wide posts and 5¾-inch wide windows on 18-inch centers were cast between an 18-inch tall lower wall section and an upper 6-inch concrete beam. The installation had a 2-inch wide joint in the parapet and deck located approximately 30 ft from one end of the rail represented the critical location for the structural adequacy test. Three dowel bars fabricated from #8 (1-inch outside diameter) rebar spanned the open joint (one in the beam and two in the wall section).

Figure 3.1 presents overall information on the TxDOT C412 bridge rail, and Figure 3.2 provides photographs of the installation. Appendix B.1 provides further details of the TxDOT C412 bridge rail.

3.3 MATERIAL SPECIFICATIONS

Appendix B.2 provides material certification documents for the materials used to install/construct the TxDOT C412 bridge rail.

* The opinions/interpretations identified/expressed in Section 3.1 are outside the scope of TTI Proving Ground's A2LA Accreditation.

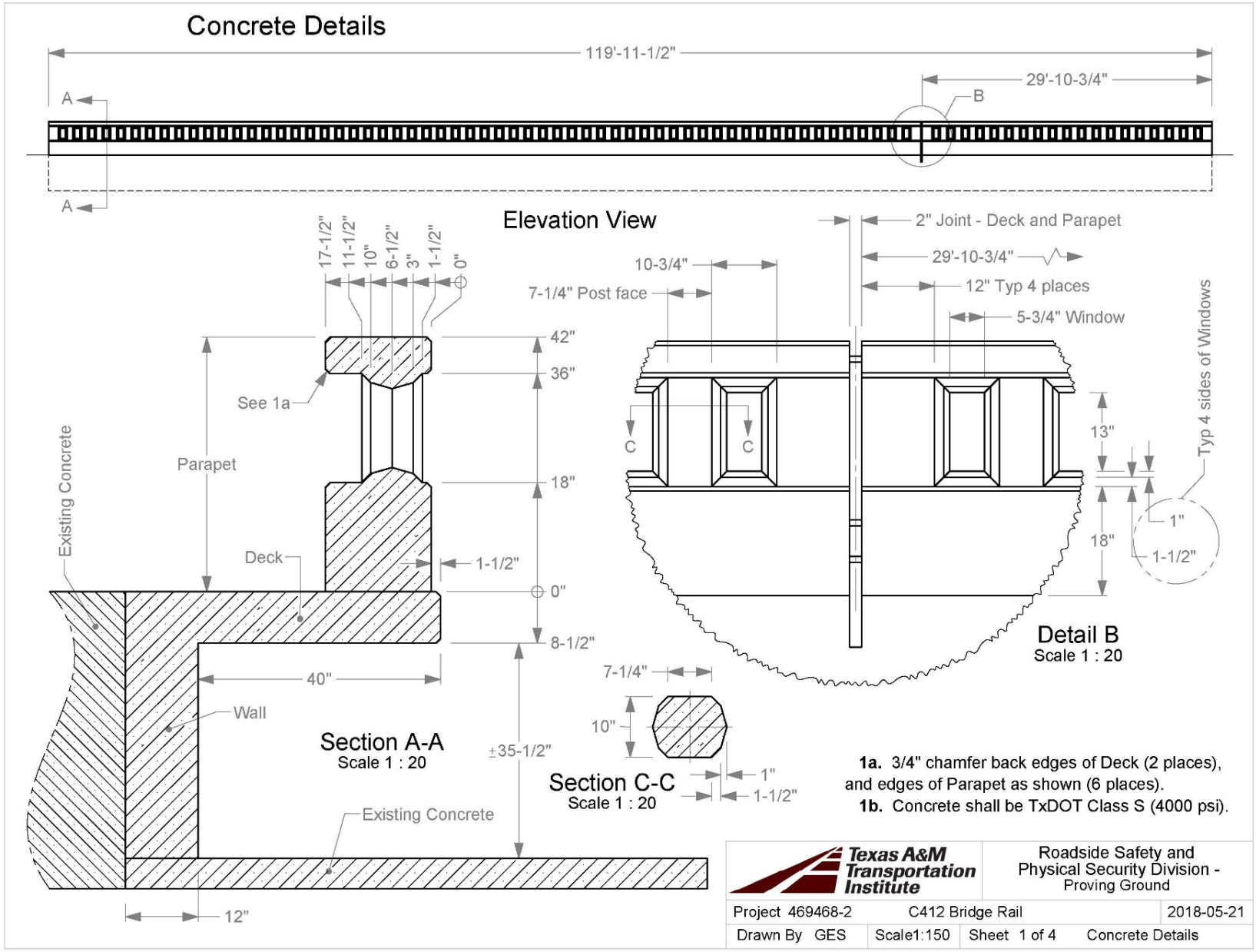

Figure 3.1. Overall Details of TxDOT C412 Bridge Rail.



Figure 3.2. TxDOT C412 Bridge Rail prior to Testing.

3.4 MASH TEST 5-12 (CRASH TEST NO. 469468-2-1)

3.4.1 Test Designation and Actual Impact Conditions

MASH Test 5-12 involves a 36000V vehicle weighing 79,300 lb ±1100 lb impacting the CIP of the bridge rail at an impact speed of 50 mi/h ±2.5 mi/h and an angle of 15° ±1.5°. The CIP for *MASH* Test 5-12 on the TxDOT C412 bridge rail was 1 ft ±1 ft downstream of the joint in the parapet and deck based on information in *MASH* Table 2.8.

The 2007 Freightliner CL120 with 2002 Utility 53-ft trailer used in the test weighed 80,300 lb, and the actual impact speed and angle were 50.8 mi/h and 15.0°, respectively. The actual impact point was 1.2 ft downstream of the joint in the parapet and deck. Minimum target IS was 404 kip-ft, and actual IS was 464 kip-ft.

3.4.2 Weather Conditions

The test was performed on the afternoon of June 15, 2018. Weather conditions at the time of testing were as follows: wind speed: 4 mi/h; wind direction: 217° (vehicle was traveling in a northerly direction); temperature: 93°F; relative humidity: 58 percent.

3.4.3 Test Vehicle

Figures 3.3 and 3.4 show the 2007 Freightliner CL20 with 2002 Utility 53-ft trailer used for the crash test. The vehicle's test inertia weight was 80,300 lb, and its gross static weight was 80,300 lb. The height to the lower edge of the vehicle bumper was 16.0 inches, and the height to the upper edge of the bumper was 34.5 inches. The height to the center of gravity of the trailer ballast was 71.2 inches. Tables B.1 and B.2 in Appendix B.3 give additional dimensions and information on the vehicle. The vehicle was directed into the installation under its own power using a cable guidance system that was released such that the vehicle was freewheeling and unrestrained just prior to impact.



Figure 3.3. TxDOT C412 Bridge Rail/Test Vehicle Geometrics for Test No. 469468-2-1.



Figure 3.4. Test Vehicle before Test No. 469468-2-1.

3.4.4 Test Description

The test vehicle impacted the TxDOT C412 bridge rail 1.2 ft downstream of the joint in the parapet and deck at a speed of 50.8 mi/h and an angle of 15.0°. Table 3.1 lists events that occurred during Test No. 469468-2-1. Figures B.1 and B.2 in Appendix B.4 present sequential photographs during the test.

Table 3.1. Events during Test No. 469468-2-1.

TIME (s)	EVENTS
0.000	Right front corner of tractor bumper contacts bridge rail
0.109	Tractor begins to redirect
0.204	Left front tire of tractor comes off ground
0.263	Tractor becomes parallel with the bridge rail
0.465	Left rear trailer tires come off the ground
0.514	Left front tire of tractor makes contact with ground
0.787	Trailer parallel with barrier
0.819	Rear of trailer impacts bridge rail slightly upstream of initial impact point
0.829	Barrier at maximum deflection after trailer contact
1.123	Maximum working width by trailer top

For longitudinal barriers, it is desirable that the vehicle redirects and exits the bridge rail within the exit box criteria (not less than 65.6 ft downstream from loss of contact for heavy vehicles). The 36000V vehicle exited within the exit box criteria defined in *MASH*. After loss of contact with the barrier, the vehicle yawed counterclockwise and came to rest 206 ft downstream of the point of impact and 10 ft toward the field side.

3.4.5 Damage to Test Installation

Figures 3.5 through 3.7 show the damage to the TxDOT C412 bridge rail. The top concrete beam, some of the windows, and the lower wall had chips and spalls along the traffic face. A crack at the edge of the cantilever deck radiated in both directions from the joint (30 ft upstream and 17 ft downstream). Working width was 86.7 inches, and the height of maximum working width was 107.8 inches. Maximum dynamic deflection during the test was 1.2 inches, and there was no measurable maximum permanent deformation.



Figure 3.5. TxDOT C412 Bridge Rail/Test Vehicle after Test No. 469468-2-1.



Figure 3.6. TxDOT C412 Bridge Rail after Test No. 469468-2-1.



Figure 3.7. Field Side of TxDOT C412 Bridge Rail after Test No. 469468-2-1.

3.4.6 Damage to Test Vehicle

Figure 3.8 shows the damage sustained by the vehicle. The front bumper, hood, front axle, right front U-bolts and springs, right front tire and rim, right front fuel tank, right rear outer tire and rim, and fifth wheel mount of the tractor were damaged. The right front and rear outer tires and rims, right side of the van box, and roof of the trailer were damaged. Maximum exterior crush to the vehicle was 14.0 inches in the side plane at the right front corner at bumper height. No occupant compartment deformation was observed. Figure 3.9 shows the interior of the vehicle.



Figure 3.8. Test Vehicle after Test No. 469468-2-1.



Figure 3.9. Interior of Test Vehicle for Test No. 469468-2-1.

3.4.7 Occupant Risk Factors

Data from the accelerometer, located at the fifth-wheel, were digitized for information purposes only and results are shown in Table 3.2. Figure 3.10 summarizes these data and other pertinent information from the test. Figure B.3 in Appendix B.5 shows the vehicle angular displacements, and Figures B.4 through B.12 in Appendix B.6 show acceleration versus time traces.

Table 3.2. Occupant Risk Factors for Test No. 469468-2-1.

Occupant Risk Factor	Value	Time
OIV		
Longitudinal	**3.6 ft/s**	at 0.2302 s on right side of interior
Lateral	**14.4 ft/s**	
Occupant Ridedown Accelerations		
Longitudinal	**10.1 g**	0.2393–0.2493 s
Lateral	**16.4 g**	0.2473–0.2573 s
THIV	**16.4 km/h** **4.6 m/s**	at 0.2299 s on right side of interior
PHD	**16.4 g**	0.2474–0.2574 s
ASI	**0.89**	0.2615–0.3115 s
Maximum 50-ms Moving Average		
Longitudinal	**−3.2 g**	0.1993–0.2493 s
Lateral	**−8.3 g**	0.2461–0.2961 s
Vertical	**9.0 g**	1.1889–1.2389 s
Maximum Roll, Pitch, and Yaw Angles		
Roll	**15°**	1.9482 s
Pitch	**22°**	1.4740 s
Yaw	**42°**	1.8995 s



0.000 s



0.100 s



0.300 s



0.750 s

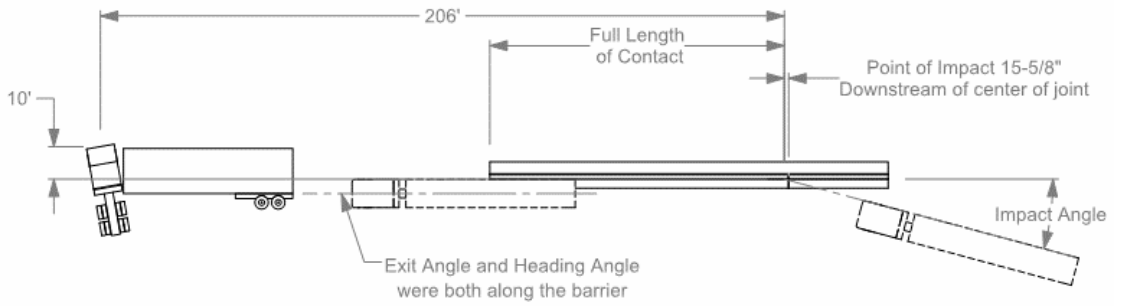

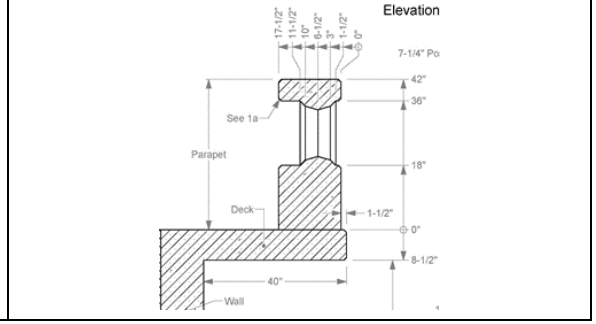

General Information
- Test Agency ..... Texas A&M Transportation Institute (TTI)
- Test Standard Test No. ..... *MASH* Test 5-12
- TTI Test No. 469468-2-1
- Test Date 2018-06-15

Test Article
- Type ..... Bridge Rail
- Name ..... C412 Bridge Rail
- Installation Length ..... 120 ft
- Material or Key Elements ... 42-inch tall, 17½ inches wide reinforced concrete parapet with 12¼ in wide posts and 5¾-in windows on 18-in centers between 18-in wall and 6-in top beam

Soil Type and Condition ..... Concrete deck, damp

Test Vehicle
- Type/Designation 36000V
- Make and Model ..... 2007 Freightliner CL120 with 2003 Utility 53-ft trailer
- Curb ..... 28,420 lb
- Test Inertial ..... 80,300 lb
- Dummy ..... No dummy
- Gross Static ..... 80,300 lb

Impact Conditions
- Speed ..... 50.8 mi/h
- Angle ..... 15.0°
- Location/Orientation ..... 1.2 ft downstream of joint

Impact Severity ..... 464 ki-ft

Exit Conditions
- Speed ..... 45.4°
- Angle ..... Along Barrier

Occupant Risk Values
- Longitudinal OIV ..... 3.6 ft/s
- Lateral OIV ..... 14.4 ft/s
- Longitudinal Ridedown ..... 10.1 g
- Lateral Ridedown ..... 16.4 g
- THIV ..... 16.4 km/h
- PHD ..... 16.4 g
- ASI 0.89

Max. 0.050-s Average
- Longitudinal ..... −3.2 g
- Lateral ..... −8.3 g
- Vertical ..... 9.0 g

Post-Impact Trajectory
- Stopping Distance ..... 206 ft downstream 10 ft twd field side

Vehicle Stability
- Maximum Yaw Angle ..... 42°
- Maximum Pitch Angle ..... 22°
- Maximum Roll Angle ..... 15°
- Vehicle Snagging ..... No
- Vehicle Pocketing ..... No

Test Article Deflections
- Dynamic ..... 1.2 inches
- Permanent ..... None measurable
- Working Width ..... 86.7 inches
- Working Width Height ..... 107.8 inches

Vehicle Damage
- VDS ..... NA
- CDC ..... NA
- Max. Exterior Deformation ..... 14.0 inches
- OCDI ..... NA
- Max. Occupant Compartment Deformation ..... None

Figure 3.10. Summary of Results for *MASH* Test 5-12 on TxDOT C412 Bridge Rail.

3.4.8 Assessment of Results

Table 3.3 provides an assessment of the test based on the applicable safety evaluation criteria for *MASH* Test 5-12.

3.5 CONCLUSIONS

The tractor-trailer was contained and redirected. The trailer rolled on top of the bridge rail and rode along the top until it exited the end of the installation. The trailer disconnected from the tractor, and the trailer rolled onto its side after exiting the installation. The trailer roll began to recover from its maximum prior to exiting the system.

The TxDOT C412 bridge rail performed acceptably according to *MASH* Test 5-12 evaluation criteria.

Table 3.3. Performance Evaluation Summary for *MASH* Test 5-12 on TxDOT C412 Bridge Rail.

Test Agency: Texas A&M Transportation Institute Test No.: 469468-2-1 Test Date: 2018-06-15

***MASH* Test 5-12 Evaluation Criteria**	**Test Results**	**Assessment**
Structural Adequacy		
A. Test article should contain and redirect the vehicle or bring the vehicle to a controlled stop; the vehicle should not penetrate, underride, or override the installation although controlled lateral deflection of the test article is acceptable	The C412 bridge rail contained and redirected the 36000V vehicle. The vehicle did not penetrate, underride, or override the installation. Maximum dynamic deflection during the test was 1.2 inches.	Pass
Occupant Risk		
D. Detached elements, fragments, or other debris from the test article should not penetrate or show potential for penetrating the occupant compartment, or present an undue hazard to other traffic, pedestrians, or personnel in a work zone.	No detached elements, fragments, or other debris from the test article were present to penetrate or show potential for penetrating the occupant compartment or to present hazard to others in the area.	Pass
Deformations of, or intrusions into, the occupant compartment should not exceed limits set forth in Section 5.3 and Appendix E of MASH.	No occupant compartment deformation occurred.	
G. It is preferable, although not essential, that the vehicle remain upright during and after collision.	The 36000V vehicle remained upright during and after the collision event. Maximum roll was 15°.	Pass
Vehicle Trajectory		
For redirective devices, it is preferable that the vehicle be smoothly redirected and leave the barrier within the exit box criteria (not less than 65.6 ft for the 36000V vehicle) and should be documented.	The 36000V vehicle exited within the exit box criteria.	Documentation only

CHAPTER 4:
TXDOT C411 BRIDGE RAIL

4.1 BACKGROUND*

The T411 bridge rail, also known as the Texas Classic Rail, is an aesthetic concrete rail with windows and pilasters. It has an overall height of 32 inches with 18-inch tall windows. The C411 bridge rail is a 42-inch tall version of the T411 rail that meets pedestrian code requirements and accommodates both vehicle and pedestrian traffic. The windows in the C411 bridge rail are 24 inches tall.

TxDOT and TTI researchers determined that the C411 bridge rail is more critical to evaluate through crash testing than the T411 bridge rail. The taller 24-inch windows are more critical from a vehicle interaction and snagging standpoint, and the overall 42-inch rail height is more critical from an occupant interaction standpoint. If this more critical configuration meets *MASH* requirements, the less critical T411 would also be considered *MASH* compliant.

The C411 bridge rail was constructed on site by a subcontractor under TTI Proving Ground supervision. TTI Proving Ground performed the full *MASH* TL-2 test matrix on this rail system to fully evaluate vehicle and occupant interaction with the concrete rail system. The full-scale crash tests included *MASH* test designations 2-10 (small passenger car) and 2-11 (pickup truck). With the large window openings, it was considered necessary to evaluate the impact performance of the small car at the 25° impact angle prescribed by *MASH*. Because the rail height exceeds 33 inches, a crash dummy was placed in the pickup truck test per *MASH* requirements. TTI researchers also evaluated occupant trajectory and any head contact with the bridge rail system.

4.2 SYSTEM DETAILS

4.2.1 Test Article and Installation Details

The test installation was 75 ft long and consisted of a 42-inch tall reinforced concrete rail mounted on an 8-inch thick reinforced cantilevered concrete deck. The rail was 12 inches thick and consisted of 10-inch thick × 12-inch wide posts alternated with 10-inch deep × 24-inch tall × 6-inch wide windows on 18-inch centers positioned between upper and lower concrete beams.

Figure 4.1 presents overall information on the TxDOT C411 bridge rail, and Figure 4.2 provides photographs of the installation. Appendix C.1 provides further details of the TxDOT C411 bridge rail.

4.2.2 Material Specifications

Appendix C.2 provides material certification documents for the materials used to install/construct the TxDOT C411 bridge rail.

* The opinions/interpretations identified/expressed in Section 4.1 are outside the scope of TTI Proving Ground's A2LA Accreditation.

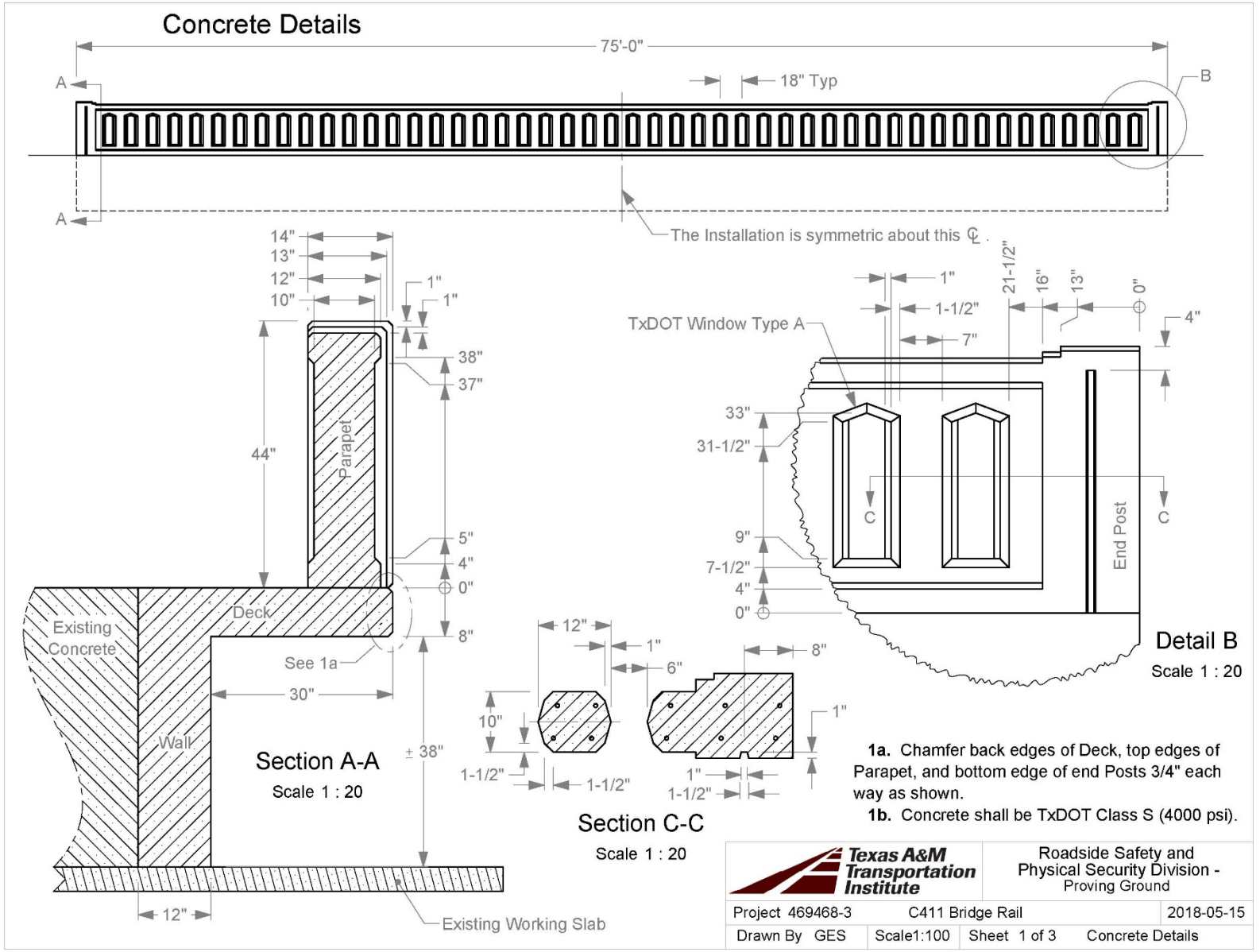

Figure 4.1. Overall Details of TxDOT C411 Bridge Rail.



Figure 4.2. TxDOT C411 Bridge Rail prior to Testing.

4.3 *MASH* TEST 2-10 (TEST NO. 469468-3-1)

4.3.1 Test Designation and Actual Impact Conditions

MASH Test 2-10 involves an 1100C vehicle weighing 2420 lb ±55 lb impacting the CIP of the bridge rail at an impact speed of 44 mi/h ±2.5 mi/h and an angle of 25° ±1.5°. The target CIP for *MASH* Test 2-10 on the TxDOT C411 was 3.3 ft ±1 ft upstream of the downstream edge of the 30th parapet window (see Figure 4.3).

The 2010 Kia Rio* used in the test weighed 2447 lb, and the actual impact speed and angle were 44.2 mi/h and 23.9°, respectively. The actual impact point was 2.7 ft upstream of the downstream edge of the 30th parapet window. Minimum target IS was 25 kip-ft, and actual IS was 26 kip-ft.

* The 2010 model vehicle used is older than the 6-year age noted in *MASH*, and was selected based upon availability. An older model vehicle is permitted by AASHTO as long as it is otherwise *MASH* compliant. Other than the vehicle's year model, this 2010 model vehicle met the *MASH* requirements.

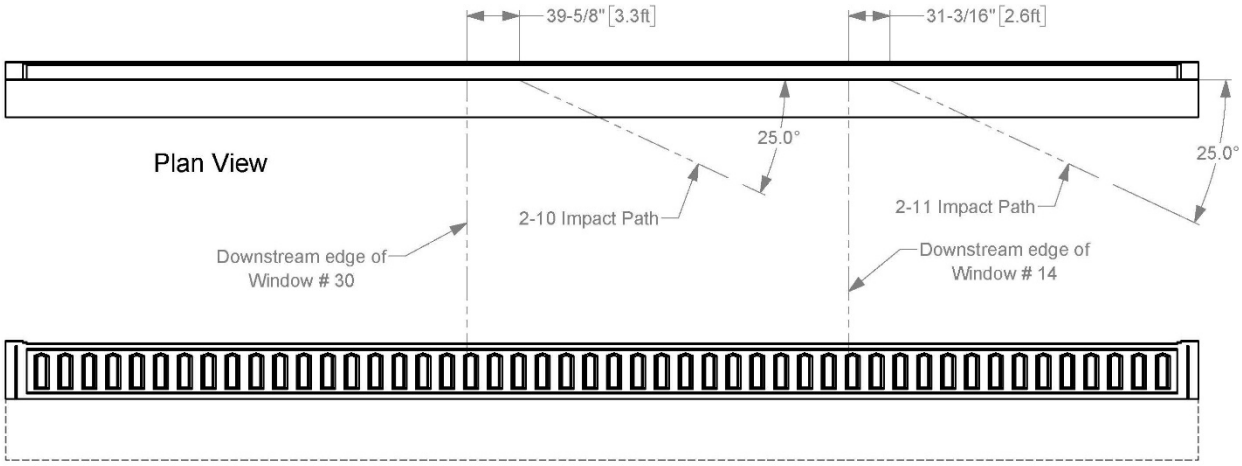

Figure 4.3. Target CIPs for Test No. 469468-3-1 and 3-2.

4.3.2 Weather Conditions

MASH Test 2-10 on the TxDOT C411 bridge rail was performed on the morning of May 24, 2018. Weather conditions at the time of testing were as follows: wind speed: 3 mi/h; wind direction: 173° (vehicle was traveling in a southwesterly direction); temperature: 82°F; relative humidity: 79 percent.

4.3.3 Test Vehicle

Figures 4.4 and 4.5 show the 2010 Kia Rio used for the crash test. The vehicle's test inertia weight was 2447 lb, and its gross static weight was 2612 lb. The height to the lower edge of the vehicle bumper was 7.75 inches, and the height to the upper edge of the bumper was 21.5 inches. Table C.1 in Appendix C.3.1 gives additional dimensions and information on the vehicle. The vehicle was directed into the installation using a cable reverse tow and guidance system, and was released to be freewheeling and unrestrained just prior to impact.



Figure 4.4. TxDOT C411 Bridge Rail/Test Vehicle Geometrics for Test No. 469468-3-1.



Figure 4.5. Test Vehicle before Test No. 469468-3-1.

4.3.4 Test Description

The test vehicle impacted the C411 bridge rail 2.7 ft upstream of the downstream edge of the 30th parapet window at a speed of 44.2 mi/h and an angle of 23.9°. Table 4.1 lists events that occurred during Test No. 469468-3-1. Figures C.1 and C.2 in Appendix C.3.2 present sequential photographs during the test.

Table 4.1. Events during Test No. 469468-3-1.

TIME (s)	EVENTS
0.000	Right front corner of vehicle bumper contacts bridge rail
0.042	Vehicle begins to redirect
0.072	Left rear tire on vehicle lifts off pavement
0.186	Vehicle loses contact with bridge rail traveling at 23.8 mi/h and trajectory/heading angle of 7.8°/28.9°
0.376	Left rear tire on vehicle contacts pavement
0.759	Vehicle contacts bridge rail a second time

For longitudinal barriers, it is desirable that the vehicle redirects and exits the barrier within the exit box criteria (not less than 32.8 ft downstream from loss of contact for cars and pickups). The 1100C vehicle exited within the exit box criteria defined in *MASH*. After loss of contact with the barrier, the vehicle yawed clockwise and came to rest 39 ft downstream of the point of impact.

4.3.5 Damage to Test Installation

Figure 4.6 shows the damage to the TxDOT C411 bridge rail. The bridge rail received mostly cosmetic damage in the form of scrapes and tire marks from post 28 through post 31. Working width was 12.0 inches (the width of the barrier), and the height of maximum working width was 42.0 inches (the height of the barrier). No measurable dynamic deflection or permanent deformation occurred.



Figure 4.6. TxDOT C411 Bridge Rail after Test No. 469468-3-1.

4.3.6 Damage to Test Vehicle

Figure 4.7 shows the damage sustained by the vehicle. The front bumper, hood, radiator and support, right front tire and rim, right front strut and tower, right front fender, and right front door were damaged. The windshield was cracked in the lower right corner due to the corner of the hood being pushed into it. No holes or tears were observed in the windshield. Maximum exterior crush to the vehicle was 14.0 inches in the front plane at the right front corner at bumper height. Maximum occupant compartment deformation was 4.0 inches in the right side fire wall/toe pan area. Figure 4.8 shows the interior of the vehicle. Tables C.2 and C.3 in Appendix C.3.1 provide exterior crush and occupant compartment measurements.



Figure 4.7. Test Vehicle after Test No. 469468-3-1.



Figure 4.8. Interior of Test Vehicle after Test No. 469468-3-1.

4.3.7 Occupant Risk Factors

Data from the accelerometer, located at the vehicle center of gravity, were digitized for evaluation of occupant risk and results are shown in Table 4.2. Figure 4.9 summarizes these data and other pertinent information from the test. Figure C.3 in Appendix C.3.3 shows the vehicle angular displacements, and Figures C.4 through C.9 in Appendix C.3.4 show acceleration versus time traces.

Table 4.2. Occupant Risk Factors for Test No. 469468-3-1.

Occupant Risk Factor	Value	Time
OIV		
Longitudinal	**35.1 ft/s**	at 0.1092 s on right side of interior
Lateral	**17.4 ft/s**	
Occupant Ridedown Accelerations		
Longitudinal	**4.9 g**	0.7757–0.7857 s
Lateral	**5.4 g**	0.1114–0.1214 s
THIV	**42.7 km/h** **11.9 m/s**	at 0.1119 s on front of interior
PHD	**5.6 g**	0.1119–0.1219 s
ASI	**1.78**	0.0574–0.1074 s
Maximum 50-ms Moving Average		
Longitudinal	**−16.4 g**	0.0305–0.0805 s
Lateral	**−8.9 g**	0.0256–0.0756 s
Vertical	**−3.4 g**	0.0565–0.1065 s
Maximum Roll, Pitch, and Yaw Angles		
Roll	**26°**	2.0000 s
Pitch	**13°**	1.3813 s
Yaw	**23°**	1.1686 s

4.3.8 Assessment of Results

Table 4.3 provides an assessment of the test based on the applicable safety evaluation criteria for *MASH* Test 2-10.



0.000 s



0.100 s



0.300 s



0.600 s

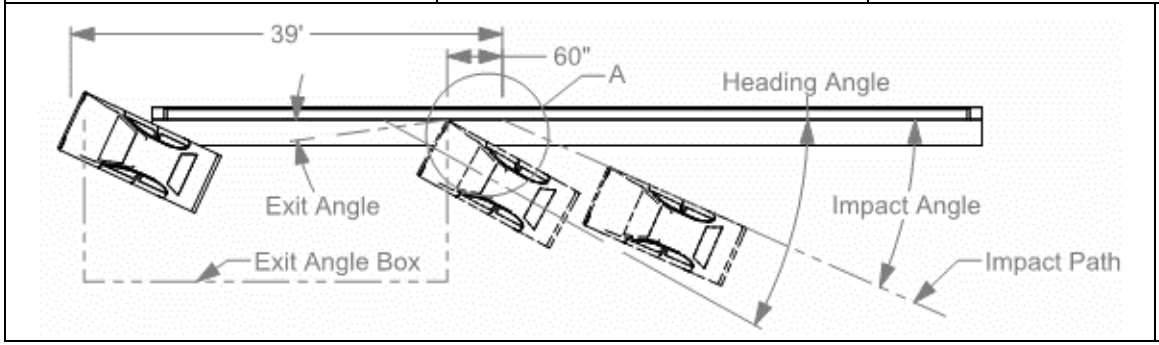

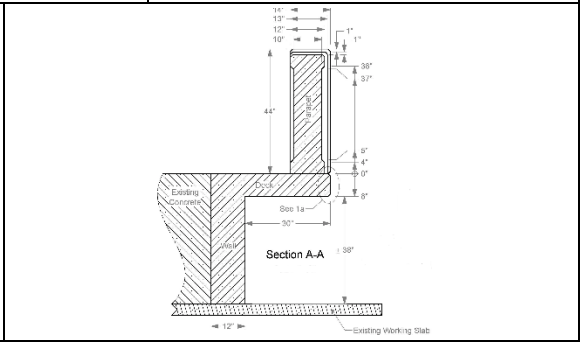

General Information
- Test Agency ..... Texas A&M Transportation Institute (TTI)
- Test Standard Test No. ..... *MASH* Test 2-10
- TTI Test No. 469468-3-1
- Test Date 2018-05-24

Test Article
- Type ..... Longitudinal Barrier - Bridge Rail
- Name ..... TxDOT C411 Bridge Rail
- Installation Length ..... 75 ft
- Material or Key Elements ... 42-inch tall x 12 inches thick reinforced concrete parapet with 10-inch thick × 12-inch wide posts and 10-inch deep × 24-inch tall × 6-inch wide windows on 18-inch centers

Soil Type and Condition ..... Concrete Deck, Damp

Test Vehicle
- Type/Designation 1100C
- Make and Model ..... 2010 Kia Rio
- Curb ..... 2490 lb
- Test Inertial ..... 2447 lb
- Dummy ..... 165 lb
- Gross Static ..... 2612 lb

Impact Conditions
- Speed ..... 44.2 mi/h
- Angle ..... 23.9°
- Location/Orientation ..... 2.7 ft upstream of 30th parapet window

Impact Severity ..... 26 kip-ft

Exit Conditions
- Speed ..... 23.8 mi/h
- Trajectory/Heading Angle ... 7.8°/28.9°

Occupant Risk Values
- Longitudinal OIV ..... 35.1 ft/s
- Lateral OIV ..... 17.4 ft/s
- Longitudinal Ridedown ..... 4.9 g
- Lateral Ridedown ..... 5.4 g
- THIV ..... 42.7 km/h
- PHD ..... 5.6 g
- ASI 1.78

Max. 0.050-s Average
- Longitudinal ..... −16.4 g
- Lateral ..... −8.9 g
- Vertical ..... −3.4 g

Post-Impact Trajectory
- Stopping Distance ..... 39 ft downstream Against traffic face

Vehicle Stability
- Maximum Yaw Angle ..... 23°
- Maximum Pitch Angle ..... 13°
- Maximum Roll Angle ..... 26°
- Vehicle Snagging ..... Slight
- Vehicle Pocketing ..... No

Test Article Deflections
- Dynamic ..... None measurable
- Permanent ..... None measurable
- Working Width ..... 12.0 inches
- Height of Working Width ..... 42.0 inches

Vehicle Damage
- VDS 02-RFQ-5
- CDC 02FREW5
- Max. Exterior Deformation ..... 14.0 inches
- OCDI RF1130000
- Max. Occupant Compartment Deformation ..... 4.0 inches

Figure 4.9. Summary of Results for *MASH* Test 2-10 on TxDOT C411 Bridge Rail.

Table 4.3. Performance Evaluation Summary for *MASH* Test 2-10 on the TxDOT C411 Bridge Rail.

Test Agency: Texas A&M Transportation Institute Test No.: 469468-3-1 Test Date: 2018-05-24

***MASH* Test 2-10 Evaluation Criteria**	**Test Results**	**Assessment**
Structural Adequacy		
A. Test article should contain and redirect the vehicle or bring the vehicle to a controlled stop; the vehicle should not penetrate, underride, or override the installation although controlled lateral deflection of the test article is acceptable	The TxDOT C411 bridge rail contained and redirected the 1100C vehicle. The vehicle did not penetrate, underride, or override the installation. No measurable dynamic deflection or permanent deformation was observed.	Pass
Occupant Risk		
D. Detached elements, fragments, or other debris from the test article should not penetrate or show potential for penetrating the occupant compartment, or present an undue hazard to other traffic, pedestrians, or personnel in a work zone.	No detached elements, fragments, or other debris were present to penetrate or show potential for penetrating the occupant compartment, or to present hazard to others in the area.	Pass
Deformations of, or intrusions into, the occupant compartment should not exceed limits set forth in Section 5.3 and Appendix E of MASH.	Maximum occupant compartment deformation was 4.0 inches in the right firewall area.	
F. The vehicle should remain upright during and after collision. The maximum roll and pitch angles are not to exceed 75 degrees.	The 1100C vehicle remained upright during and after the collision event. Maximum roll and pitch angles were 26° and 13°, respectively.	Pass
H. Longitudinal and lateral occupant impact velocities should fall below the preferred value of 30 ft/s, or at least below the maximum allowable value of 40 ft/s.	Longitudinal OIV was 35.1 ft/s, and lateral OIV was 17.4 ft/s.	Pass
I. Longitudinal and lateral occupant ridedown accelerations should fall below the preferred value of 15.0 Gs, or at least below the maximum allowable value of 20.49 Gs.	Maximum longitudinal 10-ms occupant ridedown was 4.9 g, and maximum lateral 10-ms occupant ridedown was 5.4 g.	Pass
Vehicle Trajectory		
For redirective devices, it is preferable that the vehicle be smoothly redirected and leave the barrier within the exit box criteria (not less than 32.8 ft for the 1100C and 2270P vehicles) and should be documented.	The 1100C vehicle exited within the exit box criteria.	Documentation only

4.4 *MASH* TEST 2-11 (TEST NO. 469468-3-2)

4.4.1 Test Designation and Actual Impact Conditions

MASH Test 2-11 involves a 2270P vehicle weighing 5000 lb ±110 lb impacting the CIP of the bridge rail at an impact speed of 44 mi/h ±2.5 mi/h and an angle of 25° ±1.5°. The target CIP for *MASH* Test 2-11 on the TxDOT C411 was 2.6 ft ±1 ft upstream of the downstream edge of the 14th parapet window (see Figure 4.3).

The 2013 RAM 1500 pickup used in the test weighed 5012 lb, and the actual impact speed and angle were 45.0 mi/h and 24.4°, respectively. The actual impact point was 2.2 ft upstream of the downstream edge of the 14th parapet window. Minimum target IS was 52 kip-ft, and actual IS was 58 kip-ft.

4.4.2 Weather Conditions

MASH Test 2-11 on the TxDOT C411 bridge rail was performed on the morning of May 22, 2018. Weather conditions at the time of testing were as follows: wind speed: 3 mi/h; wind direction: 183° (vehicle was traveling in a southwesterly direction); temperature: 82°F; relative humidity: 79 percent.

4.4.3 Test Vehicle

Figures 4.10 and 4.11 show the 2013 RAM 1500 pickup used for the crash test. The vehicle's test inertia weight was 5012 lb, and its gross static weight was 5177 lb. The height to the lower edge of the vehicle bumper was 11.75 inches, and the height to the upper edge of the bumper was 27.0 inches. The height to the vehicle's center of gravity was 28.9 inches. Tables C.4 and C.5 in Appendix C.4.1 give additional dimensions and information on the vehicle. The vehicle was directed into the installation using a cable reverse tow and guidance system, and was released to be freewheeling and unrestrained just prior to impact.



Figure 4.10. TxDOT C411 Bride Rail/Test Vehicle Geometrics for Test No. 469468-3-2.



Figure 4.11. Test Vehicle before Test No. 469468-3-2.

4.4.4 Test Description

The test vehicle impacted the C411 bridge rail 2.2 ft upstream of the downstream edge of the 14th parapet window at a speed of 45.0 mi/h and an angle of 24.4°. Table 3.4 lists events that occurred during Test No. 469468-3-2. Figures C.10 and C.11 in Appendix C.4.2 present sequential photographs during the test.

Table 4.4. Events during Test No. 469468-3-2.

TIME (s)	EVENTS
0.000	Right front corner of vehicle bumper contacts bridge rail
0.039	Vehicle begins to redirect
0.219	Vehicle loses contact with bridge rail
0.313	Vehicle becomes parallel to, but not in contact with bridge rail (approximately 5 inches away)
0.343	Right rear bed contacts bridge rail
0.482	Vehicle loses contact with bridge rail while traveling at 29.9 mi/h and trajectory/heading angle of 5.9°/5.6°
1.182	Left front of vehicle recontacts bridge rail
1.936	Vehicle contacts secondary safety barrier that was not part of test

For longitudinal barriers, it is desirable that the vehicle redirects and exits the barrier within the exit box criteria (not less than 32.8 ft downstream from loss of contact for cars and pickups). The 2270P vehicle exited within the exit box criteria defined in *MASH*. After loss of contact with the barrier, the vehicle yawed counterclockwise and came to rest 85 ft downstream of the point of impact and 6 ft toward traffic lanes.

4.4.5 Damage to Test Installation

Figure 4.12 shows the damage to the TxDOT C411 bridge rail. The bridge rail received mostly cosmetic damage consisting of scrapes and tire marks from post 14 through post 17. Working width was 12.0 inches (the width of the barrier), and the height of maximum working

width was 42.0 inches (the height of the barrier). No measurable dynamic deflection or permanent deformation occurred.



Figure 4.12. TxDOT C411 Bridge Rail after Test No. 469468-3-2.

4.4.6 Damage to Test Vehicle

Figure 4.13 shows the damage sustained by the vehicle. The front bumper, hood, grill, right front fender, right lower A-arm, right upper and lower ball joints, right tie rod end, right front tire and rim, right front door, right rear exterior bed, and rear bumper were damaged. The windshield was cracked at the right lower edge due to slight contact by the hood. Maximum exterior crush to the vehicle was 12.0 inches in the side plane at the right front corner at bumper

height. Maximum occupant compartment deformation was 4.0 inches in the firewall area. Figure 4.14 shows the interior of the vehicle. Tables C.6 and C.7 in Appendix C.4.1 provide exterior crush and occupant compartment measurements.



Figure 4.13. Test Vehicle after Test No. 469468-3-2.



Figure 4.14. Interior of Test Vehicle after Test No. 469468-3-2.

4.4.7 Occupant Risk Factors

Data from the accelerometer, located at the vehicle center of gravity, were digitized for evaluation of occupant risk, and results are shown in Table 4.5. Figure 4.15 summarizes these data and other pertinent information from the test. Figure C.12 in Appendix C.4.3 shows the vehicle angular displacements, and Figures C.13 through C.18 in Appendix C.4.4 show acceleration versus time traces.

Table 4.5. Occupant Risk Factors for Test No. 469468-3-2.

Occupant Risk Factor	Value	Time
OIV		
Longitudinal	**20.0 ft/s**	at 0.1175 s on right side of interior
Lateral	**18.0 ft/s**	
Occupant Ridedown Accelerations		
Longitudinal	**3.8 g**	0.1437–0.1537 s
Lateral	**5.0 g**	0.3941–0.4041 s
THIV	**29.3 km/h** **8.1 m/s**	at 0.1138 s on right side of interior
PHD	**5.6 g**	0.3941–0.4041 s
ASI	**1.27**	0.0692–0.1192 s
Maximum 50-ms Moving Average		
Longitudinal	**−8.4 g**	0.0451–0.0951 s
Lateral	**−9.4 g**	0.0490–0.0990 s
Vertical	**2.5 g**	0.1027–0.1527 s
Maximum Roll, Pitch, and Yaw Angles		
Roll	**7°**	0.3944 s
Pitch	**3°**	0.9749 s
Yaw	**31°**	0.4107 s

4.4.8 Assessment of Results

Table 4.6 provides an assessment of the test based on the applicable safety evaluation criteria for *MASH* Test 2-11.

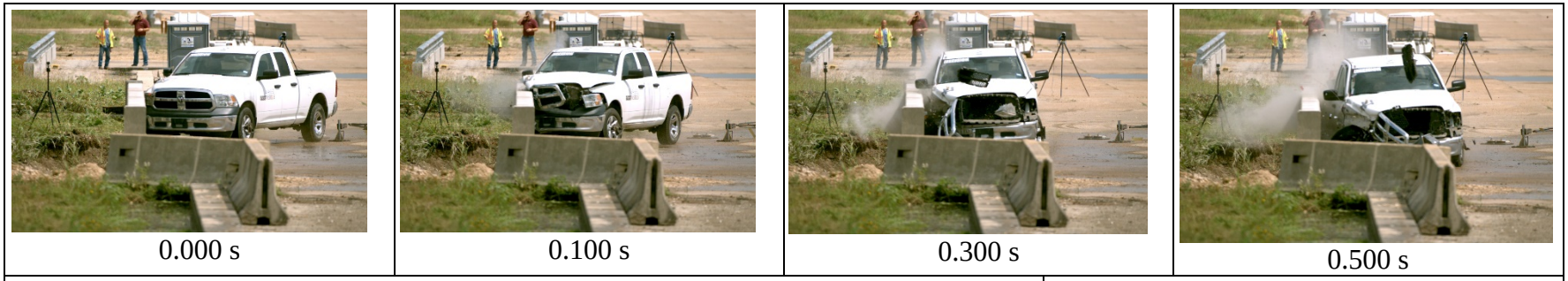

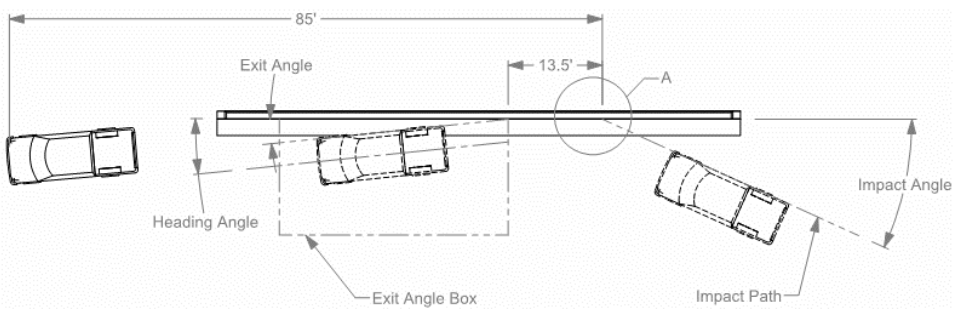

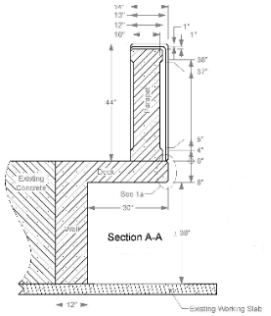

General Information
- Test Agency ..... Texas A&M Transportation Institute (TTI)
- Test Standard Test No. ..... *MASH* Test 2-11
- TTI Test No. 469468-3-2
- Test Date 2018-05-22

Test Article
- Type ..... Longitudinal Barrier - Bridge Rail
- Name ..... TxDOT C411 Bridge Rail
- Installation Length ..... 75 ft
- Material or Key Elements ... 42-inch tall x 12 inches thick reinforced concrete wall w/series of 10- deep × 24-inch tall × 6-inch wide windows on 18-inch centers

Soil Type and Condition ..... Concrete Deck, Damp

Test Vehicle
- Type/Designation 2270P
- Make and Model ..... 2013 RAM 1500 Pickup
- Curb ..... 4956 lb
- Test Inertial ..... 5012 lb
- Dummy ..... 165 lb
- Gross Static ..... 5177 lb

Impact Conditions
- Speed ..... 45.0 mi/h
- Angle ..... 24.4°
- Location/Orientation ..... 2.2 ft upstream of 14th parapet window

Impact Severity ..... 58 kip-ft

Exit Conditions
- Speed ..... 29.9 mi/h
- Trajectory/Heading Angle ... 5.9°/5.6°

Occupant Risk Values
- Longitudinal OIV ..... 20.0 ft/s
- Lateral OIV ..... 18.0 ft/s
- Longitudinal Ridedown ..... 3.8 g
- Lateral Ridedown ..... 5.0 g
- THIV ..... 29.3 km/h
- PHD ..... 5.6 g
- ASI 1.27

Max. 0.050-s Average
- Longitudinal ..... −8.4 g
- Lateral ..... −9.4 g
- Vertical ..... 2.5 g

Post-Impact Trajectory
- Stopping Distance ..... 85 ft downstream 6 ft toward traffic

Vehicle Stability
- Maximum Yaw Angle ..... 31°
- Maximum Pitch Angle ..... 3°
- Maximum Roll Angle ..... 7°
- Vehicle Snagging ..... Slight
- Vehicle Pocketing ..... No

Test Article Deflections
- Dynamic ..... None measurable
- Permanent ..... None measurable
- Working Width ..... 12.0 inches
- Height of Working Width ..... 42.0 inches

Vehicle Damage
- VDS 02-RFQ-3
- CDC 02FREW3
- Max. Exterior Deformation ..... 12.0 inches
- OCDI RF1030000
- Max. Occupant Compartment Deformation ..... 4.0 inches

Figure 4.15. Summary of Results for *MASH* Test 2-11 on TxDOT C411 Bridge Rail.

Table 4.6. Performance Evaluation Summary for *MASH* Test 2-11 on TxDOT C411 Bridge Rail.

Test Agency: Texas A&M Transportation Institute Test No.: 469468-3-2 Test Date: 2018-05-22

***MASH* Test 2-11 Evaluation Criteria**	**Test Results**	**Assessment**
Structural Adequacy		
A. Test article should contain and redirect the vehicle or bring the vehicle to a controlled stop; the vehicle should not penetrate, underride, or override the installation although controlled lateral deflection of the test article is acceptable	The TxDOT C411 bridge rail contained and redirected the 2270P vehicle. The vehicle did not penetrate, underride, or override the installation. No measurable dynamic deflection or permanent deformation was observed.	Pass
Occupant Risk		
D. Detached elements, fragments, or other debris from the test article should not penetrate or show potential for penetrating the occupant compartment, or present an undue hazard to other traffic, pedestrians, or personnel in a work zone.	No detached elements, fragments, or other debris were present to penetrate or show potential for penetrating the occupant compartment, or to present hazard to others in the area.	Pass
Deformations of, or intrusions into, the occupant compartment should not exceed limits set forth in Section 5.3 and Appendix E of MASH.	Maximum occupant compartment deformation was 4.0 inches in the right firewall area.	
F. The vehicle should remain upright during and after collision. The maximum roll and pitch angles are not to exceed 75 degrees.	The 2270P vehicle remained upright during and after the collision event. Maximum roll and pitch angles were 7° and 3°, respectively.	Pass
H. Longitudinal and lateral occupant impact velocities should fall below the preferred value of 30 ft/s, or at least below the maximum allowable value of 40 ft/s.	Longitudinal OIV was 20.0 ft/s, and lateral OIV was 18.0 ft/s.	Pass
I. Longitudinal and lateral occupant ridedown accelerations should fall below the preferred value of 15.0 Gs, or at least below the maximum allowable value of 20.49 Gs.	Maximum longitudinal 10-ms occupant ridedown was 3.8 g, and maximum lateral 10-ms occupant ridedown was 5.0 g.	Pass
Vehicle Trajectory For redirective devices, it is preferable that the vehicle be smoothly redirected and leave the barrier within the exit box criteria (not less than 32.8 ft for the 1100C and 2270P vehicles), and should be documented.	The 2270P vehicle exited within the exit box criteria.	Documentation only

4.5 CONCLUSIONS

The TxDOT C411 bridge rail contained and redirected the 1100C vehicle. The vehicle did not penetrate, underride, or override the installation. No dynamic deflection or permanent deformation was observed. No detached elements, fragments, or other debris were present to penetrate or show potential for penetrating the occupant compartment, or to present hazard to others in the area. Maximum occupant compartment deformation was 4.0 inches in the right firewall area. The 1100C vehicle remained upright during and after the collision event. Maximum roll and pitch angles were 26° and 13°, respectively. Occupant risk factors were within the allowable limits specified in *MASH*. The 1100C vehicle exited within the exit box criteria.

The TxDOT C411 bridge rail contained and redirected the 2270P vehicle. The vehicle did not penetrate, underride, or override the installation. No measurable dynamic deflection or permanent deformation was observed. No detached elements, fragments, or other debris were present to penetrate or show potential for penetrating the occupant compartment, or to present hazard to others in the area. Maximum occupant compartment deformation was 4.0 inches in the right firewall area. The 2270P vehicle remained upright during and after the collision event. Maximum roll and pitch angles were 7° and 3°, respectively. Occupant risk factors were within the preferred limits specified in *MASH*. The 2270P vehicle exited within the exit box criteria.

The TxDOT C411 bridge rail performed acceptably according to *MASH* TL-2 evaluation criteria as shown in Table 4.7.

Table 4.7. Assessment Summary for *MASH* TL-2 Tests on TxDOT C411 Bridge Rail.

Evaluation Factors	Evaluation Criteria	Test No. 469468-3-1	Test No. 469468-3-2
Structural Adequacy	A	S	S
Occupant Risk	D	S	S
	F	S	S
	H	S	S
	I	S	S
	Test No.	***MASH* Test 2-10**	***MASH* Test 2-11**
	Pass/Fail	Pass	Pass

S = Satisfactory
U = Unsatisfactory
N/A = Not Applicable

CHAPTER 5:
TXDOT T1W BRIDGE RAIL

5.1 BACKGROUND

The TxDOT T1W bridge rail is a variation of a rail initially developed by the Wyoming Department of Transportation (WYDOT). The bridge rail is a 32-inch tall rail that consists of two rectangular tubular steel rail elements attached to fabricated steel posts mounted on a 9-inch tall concrete curb. The T1W bridge rail was fabricated and installed by a subcontractor under TTI Proving Ground supervision. An additional length of deck and curb was built to accommodate *MASH* test designation 4-12 on the TxDOT C1W bridge rail to be performed in Phase III. Construction of the longer length of rail during initial mobilization for the T1W rail provided overall cost savings to the project. The TxDOT T1W rail was evaluated in accordance with *MASH* TL-3 requirements.

The full *MASH* TL-3 test matrix was performed on the T1W rail system to fully evaluate any vehicle interaction and snagging on the steel posts and longitudinal rail splices, and any occupant contact with the tubular rail members. Test designations 3-10 (small passenger car) and 3-11 (pickup truck) were performed. Both tests were performed because the relationships between vehicle snagging severity and rail geometrics (such as clear opening between rail elements, post setback distance, and rail contact surface) are not established for the new *MASH* design test vehicles or for the small car at the new 25° impact angle prescribed by *MASH*.

5.2 SYSTEM DETAILS

5.2.1 Test Article and Installation Details

The TxDOT T1W test installation consisted of two rectangular tubular steel rail elements attached to fabricated steel posts mounted on a concrete curb that was cast on an 8-inch reinforced cantilevered concrete deck. The curb was 9 inches tall and 14 inches wide, and had embedded anchor bolts for attachment of the steel posts. The posts were spaced on 9 ft centers. The total height of the rail was 32 inches above the deck. Two joints extended through the curb and one of the joints continued through the cantilever deck. The joint in the parapet was for geometric evaluation of the passenger car during Test 3-10 (the 1100C test location). The other joints that extended through both the parapet and deck provided evaluation of both rail geometry and structural adequacy during Test 3-11.

Figure 5.1 presents overall information on the TxDOT T1W bridge rail, and Figure 5.2 provides photographs of the installation. Appendix D.1 provides further details of the TxDOT T1W bridge rail.

5.2.2 Material Specifications

Appendix D.2 provides material certification documents for the materials used to install/construct the TxDOT T1W bridge rail.

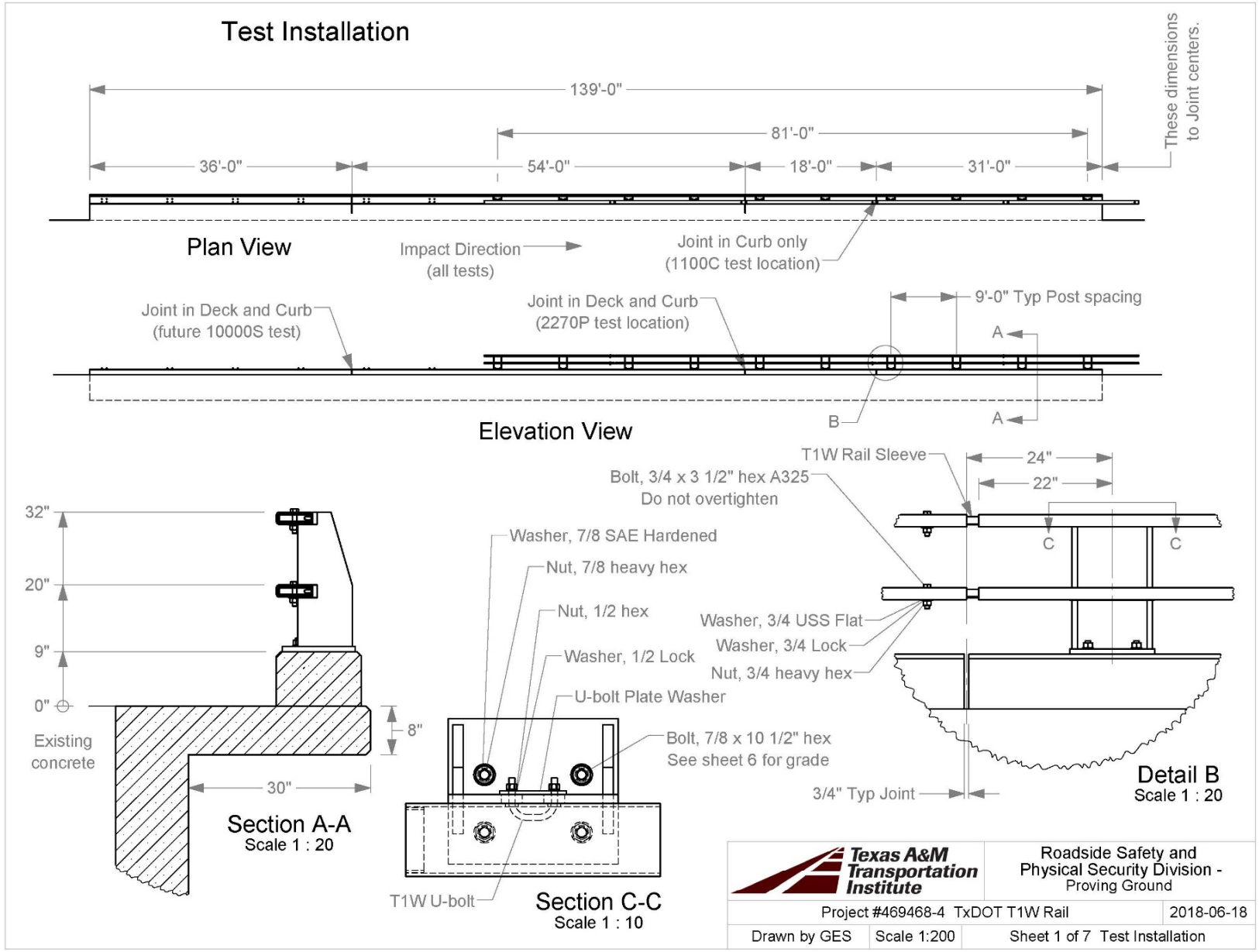

Figure 5.1. Overall Details of TxDOT T1W Bridge Rail.



Figure 5.2. TxDOT T1W Bridge Rail prior to Testing.

5.3 *MASH* TEST 3-10 (TEST NO. 469468-4-1)

5.3.1 Test Designation and Actual Impact Conditions

MASH Test 3-10 involves an 1100C vehicle weighing 2420 lb ±55 lb impacting the CIP of the bridge rail at an impact speed of 62 mi/h ±2.5 mi/h and an angle of 25° ±1.5°. The target CIP for *MASH* Test 3-10 on the TxDOT T1W was 3.6 ft ±1 ft upstream of the joint in the curb between posts 6 and 7 (see Figure 5.3).

The 2009 Kia Rio* used in the test weighed 2430 lb, and the actual impact speed and angle were 61.9 mi/h and 24.8°, respectively. The actual impact point was 3.9 ft upstream of the joint in the curb. Minimum target IS was 51 kip-ft, and actual IS was 55 kip-ft.

5.3.2 Weather Conditions

MASH Test 3-10 on the TxDOT T1W bridge rail was performed on the morning of August 3, 2018. Weather conditions at the time of testing were as follows: wind speed: 2 mi/h;

* The 2009 model vehicle used is older than the 6-year age noted in *MASH*, and was selected based upon availability. An older model vehicle is permitted by AASHTO as long as it is otherwise *MASH* compliant. Other than the vehicle's year model, this 2009 model vehicle met the *MASH* requirements.

wind direction: 184° (vehicle was traveling in a northwesterly direction); temperature: 89°F; relative humidity: 55 percent.

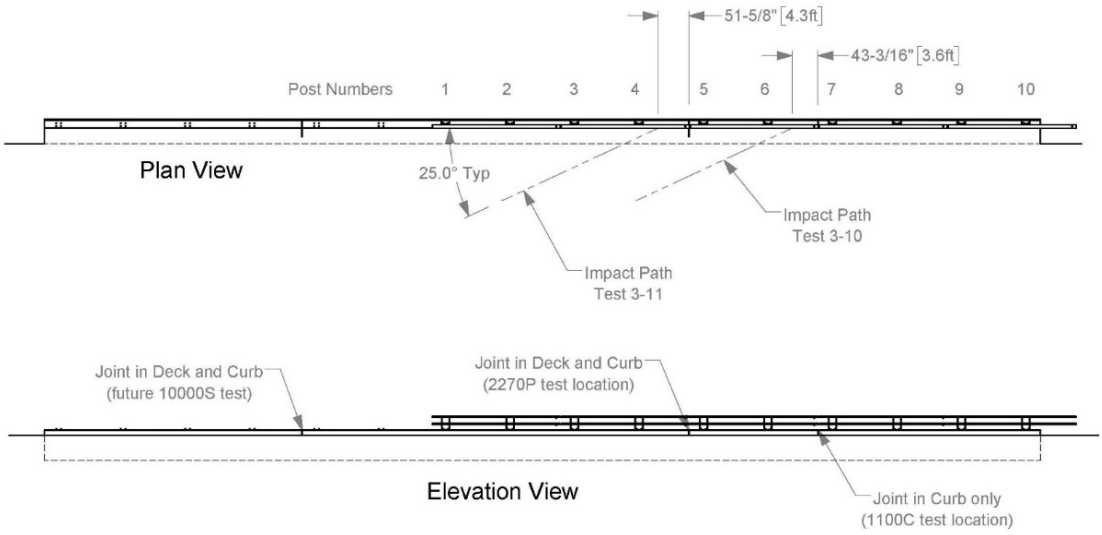

Figure 5.3. Target CIPs for Test Nos. 469468-4-1 and 4-2.

5.3.3 Test Vehicle

Figures 5.4 and 5.5 show the 2009 Kia Rio used for the crash test. The vehicle's test inertia weight was 2430 lb, and its gross static weight was 2595 lb. The height to the lower edge of the vehicle bumper was 7.75 inches, and the height to the upper edge of the bumper was 21.5 inches. Table D.1 in Appendix D.3.1 gives additional dimensions and information on the vehicle. The vehicle was directed into the installation using a cable reverse tow and guidance system, and was released to be freewheeling and unrestrained just prior to impact.

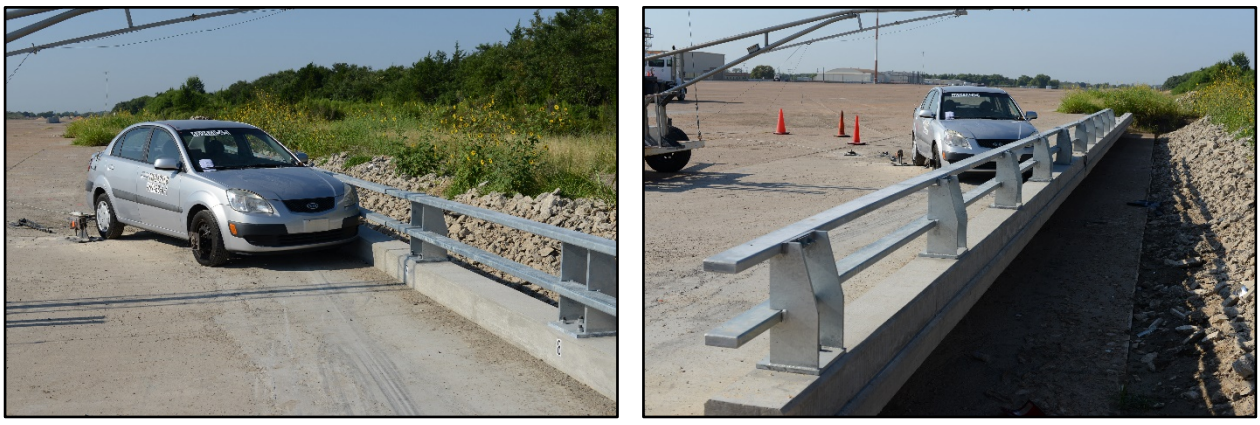

Figure 5.4. TxDOT T1W Bridge Rail/Test Vehicle Geometrics for Test No. 469468-4-1.



Figure 5.5. Test Vehicle before Test No. 469468-4-1.

5.3.4 Test Description

The test vehicle impacted the T1W bridge rail 3.9 ft upstream of the joint in the curb between posts 6 and 7 at a speed of 61.9 mi/h and an angle of 24.8°. Table 5.1 lists events that occurred during Test No. 469468-4-1. Figures D.1 and D.2 in Appendix D.3.2 present sequential photographs during the test.

Table 5.1. Events during Test No. 469468-4-1.

TIME (s)	EVENTS
0.000	Left front corner of vehicle bumper contacts bridge rail
0.036	Vehicle begins to redirect
0.055	Left front quarter panel of vehicle is peeled back by post 7
0.082	Dummy breaks driver side window
0.093	Right front tire loses contact with pavement
0.109	Right rear tire loses contact with pavement
0.164	Vehicle begins traveling parallel with bridge rail
0.196	Rear left side of vehicle impacts rail
0.292	Right front tire regains contact with ground
0.304	Vehicle loses contact with bridge rail at 47.7 mi/h and trajectory/heading angle of 7.5°/9.5°, respectively

For longitudinal barriers, it is desirable that the vehicle redirects and exits the barrier within the exit box criteria (not less than 32.8 ft downstream from loss of contact for cars and pickups). The 1100C vehicle exited within the exit box criteria defined in *MASH*. After loss of contact with the barrier, the vehicle came to rest 154 ft downstream of the point of impact and 16 ft toward traffic lanes.

5.3.5 Damage to Test Installation

Figure 5.6 shows the damage to the TxDOT T1W bridge rail. The bridge rail received mostly cosmetic damage consisting of scrapes and tire marks in the impact area and small cracks on the field side of the curb at post 7. Working width was 15.3 inches, and the height of

maximum working width was 25.0 inches. Maximum dynamic deflection was 1.1 inches, and there was no permanent deformation.



Figure 5.6. TxDOT T1W Bridge Rail after Test No. 469468-4-1.

5.3.6 Damage to Test Vehicle

Figure 5.7 shows the damage sustained by the vehicle. The front bumper, hood, radiator and support, left strut and tower, left front tire and rim, left front door and window glass, left rear door, and left rear quarter panel were damaged. The windshield was cracked in the lower left corner and the cracks radiated toward the center. No holes or tears were observed in the windshield. Maximum exterior crush to the vehicle was 10.0 inches in the side plane at the left

front corner at bumper height. Maximum occupant compartment deformation was 3.5 inches in the left side fire wall/toe pan area. Figure 5.8 shows the interior of the vehicle. Tables D.2 and D.3 in Appendix D.3.1 provide exterior crush and occupant compartment measurements.



Figure 5.7. Test Vehicle after Test No. 469468-4-1.



Figure 5.8. Interior of Test Vehicle after Test No. 469468-4-1.

5.3.7 Occupant Risk Factors

Data from the accelerometer, located at the vehicle center of gravity, were digitized for evaluation of occupant risk, and results are shown in Table 5.2. Figure 5.9 summarizes these data and other pertinent information from the test. Figure D.3 in Appendix D.3.3 shows the vehicle angular displacements, and Figures D.4 through D.9 in Appendix D.3.4 show acceleration versus time traces.

5.3.8 Assessment of Results

Table 5.3 assesses the test based on the applicable safety evaluation criteria for *MASH* Test 3-10.

Table 5.2. Occupant Risk Factors for Test No. 469468-4-1.

Occupant Risk Factor	Value	Time
OIV		
Longitudinal	**24.0 ft/s**	0.0735 s on left side of interior
Lateral	**31.8 ft/s**	
Occupant Ridedown Accelerations		
Longitudinal	**5.4 g**	0.0751–0.0851 s
Lateral	**5.7 g**	0.2152–0.2252 s
THIV	**43.4 km/h** **12.1 m/s**	at 0.0718 s on left side of interior
PHD	**8.1 g**	0.0718–0.0818 s
ASI	**2.69**	0.0446–0.0946 s
Maximum 50-ms Moving Average		
Longitudinal	**−13.7 g**	0.0275–0.0775 s
Lateral	**19.2 g**	0.0185–0.0685 s
Vertical	**−2.8 g**	0.0007–0.0507 s
Maximum Roll, Pitch, and Yaw Angles		
Roll	**12°**	0.7059 s
Pitch	**4°**	0.7500 s
Yaw	**44°**	0.5412 s



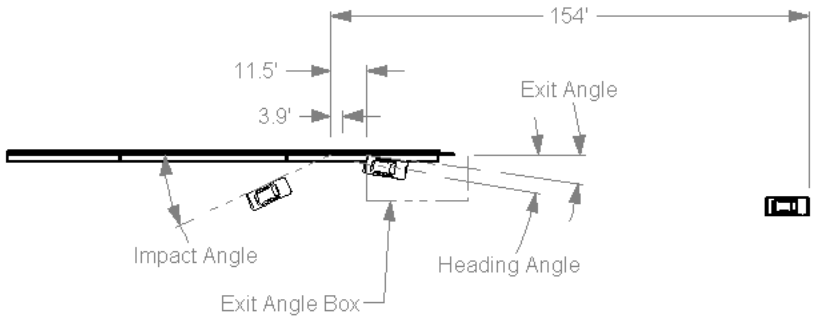

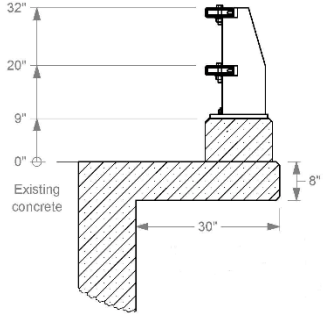

General Information
- Test Agency ..... Texas A&M Transportation Institute (TTI)
- Test Standard Test No. ..... *MASH* Test 3-10
- TTI Test No. 469468-4-1
- Test Date 2018-08-03

Test Article
- Type ..... Longitudinal Barrier - Bridge Rail
- Name ..... TxDOT T1W Bridge Rail
- Installation Length ..... 139 ft
- Material or Key Elements ... 32-in tall rail with two steel rails attached to fabricated steel posts spaced at 9 ft mounted on a 9-in tall x 14-in wide curb cast on an 8-in thick concrete deck.

Soil Type and Condition ..... Concrete Deck, Damp

Test Vehicle
- Type/Designation 1100C
- Make and Model ..... 2009 Kia Rio
- Curb ..... 2464 lb
- Test Inertial ..... 2430 lb
- Dummy ..... 165 lb
- Gross Static ..... 2595 lb

Impact Conditions
- Speed ..... 61.9 mi/h
- Angle ..... 24.8°
- Location/Orientation ..... 3.9 ft upstream of curb joint

Impact Severity ..... 55 kip-ft

Exit Conditions
- Speed ..... 47.8 mi/h
- Exit Trajectory/Heading ..... 7.5°/9.5°

Occupant Risk Values
- Longitudinal OIV ..... 24.0 ft/s
- Lateral OIV ..... 31.8 ft/s
- Longitudinal Ridedown ..... 5.4 g
- Lateral Ridedown ..... 5.7 g
- THIV ..... 43.4 km/h
- PHD ..... 8.1 g
- ASI 2.69

Max. 0.050-s Average
- Longitudinal ..... -13.7 g
- Lateral ..... 19.2 g
- Vertical ..... -2.8 g

Post-Impact Trajectory
- Stopping Distance ..... 154 ft downstream 16 ft toward traffic

Vehicle Stability
- Maximum Yaw Angle ..... 44°
- Maximum Pitch Angle ..... 4°
- Maximum Roll Angle ..... 12°
- Vehicle Snagging ..... Slight
- Vehicle Pocketing ..... No

Test Article Deflections
- Dynamic ..... 1.1 inches
- Permanent ..... None measurable
- Working Width ..... 15.3 inches
- Height of Working Width ..... 25.0 inches

Vehicle Damage
- VDS 11LFQ4
- CDC 11FLEW4
- Max. Exterior Deformation ..... 10.0 inches
- OCDI LF0030000
- Max. Occupant Compartment Deformation ..... 3.5 inches

Figure 5.9. Summary of Results for *MASH* Test 3-10 on TxDOT T1W Bridge Rail.

Table 5.3. Performance Evaluation Summary for *MASH* Test 3-10 on the TxDOT T1W Bridge Rail.

Test Agency: Texas A&M Transportation Institute Test No.: 469468-4-1 Test Date: 2018-08-03

***MASH* Test 3-10 Evaluation Criteria**	**Test Results**	**Assessment**
Structural Adequacy		
A. Test article should contain and redirect the vehicle or bring the vehicle to a controlled stop; the vehicle should not penetrate, underride, or override the installation although controlled lateral deflection of the test article is acceptable	The TxDOT T1W bridge rail contained and redirected the 1100C vehicle. The vehicle did not penetrate, underride, or override the installation. Maximum dynamic deflection during the test was 1.1 inches.	Pass
Occupant Risk		
D. Detached elements, fragments, or other debris from the test article should not penetrate or show potential for penetrating the occupant compartment, or present an undue hazard to other traffic, pedestrians, or personnel in a work zone.	No detached elements, fragments, or other debris were present to penetrate or show potential for penetrating the occupant compartment, or to present hazard to others in the area.	Pass
Deformations of, or intrusions into, the occupant compartment should not exceed limits set forth in Section 5.3 and Appendix E of MASH.	Maximum occupant compartment deformation was 3.5 inches in the left firewall area.	
F. The vehicle should remain upright during and after collision. The maximum roll and pitch angles are not to exceed 75 degrees.	The 1100C vehicle remained upright during and after the collision event. Maximum roll and pitch angles were 12° and 4°, respectively.	Pass
H. Longitudinal and lateral occupant impact velocities should fall below the preferred value of 30 ft/s, or at least below the maximum allowable value of 40 ft/s.	Longitudinal OIV was 24.0 ft/s, and lateral OIV was 31.8 ft/s.	Pass
I. Longitudinal and lateral occupant ridedown accelerations should fall below the preferred value of 15.0 Gs, or at least below the maximum allowable value of 20.49 Gs.	Maximum longitudinal 10-ms occupant ridedown was 5.4 g, and maximum lateral 10-ms occupant ridedown was 5.7 g.	Pass
Vehicle Trajectory		
For redirective devices, it is preferable that the vehicle be smoothly redirected and leave the barrier within the exit box criteria (not less than 32.8 ft for the 1100C and 2270P vehicles) and should be documented.	The 1100C vehicle exited within the exit box criteria.	Documentation only

5.4 *MASH* TEST 3-11 (TEST NO. 469468-4-2)

5.4.1 Test Designation and Actual Impact Conditions

MASH Test 3-11 involves a 2270P vehicle weighing 5000 lb ±110 lb impacting the CIP of the bridge rail at an impact speed of 62 mi/h ±2.5 mi/h and an angle of 25° ±1.5°. The target CIP for *MASH* Test 3-11 on the TxDOT T1W was 4.3 ft upstream of the joint in the deck and curb between posts 4 and 5 (see Figure 5.3).

The 2012 Dodge RAM 1500 pickup used in the test weighed 5002 lb, and the actual impact speed and angle were 62.0 mi/h and 25.0°, respectively. The actual impact point was 5.0 ft upstream of the joint in the deck and curb. Minimum target impact severity was 106 kip-ft, and actual IS was 115 kip-ft.

5.4.2 Weather Conditions

MASH Test 3-11 on the TxDOT T1W bridge rail was performed on the morning of August 1, 2018. Weather conditions at the time of testing were as follows: wind speed: 4 mi/h; wind direction: 327° (vehicle was traveling in a northwesterly direction); temperature: 87°F; relative humidity: 50 percent.

5.4.3 Test Vehicle

Figures 5.10 and 5.11 show the 2012 Dodge RAM 1500 pickup used for the crash test. The vehicle's test inertia weight was 5002 lb, and its gross static weight was 5002 lb. The height to the lower edge of the vehicle bumper was 11.75 inches, and the height to the upper edge of the bumper was 27.0 inches. The height to the vehicle's center of gravity was 28.0 inches. Tables D.4 and D.5 in Appendix D.4.1 give additional dimensions and information on the vehicle. The vehicle was directed into the installation using a cable reverse tow and guidance system, and was released to be freewheeling and unrestrained just prior to impact.



Figure 5.10. TxDOT T1W Bridge Rail/Test Vehicle Geometrics for Test No. 469468-4-2.



Figure 5.11. Test Vehicle before Test No. 469468-4-2.

5.4.4 Test Description

The test vehicle impacted the T1W bridge rail 5.0 ft upstream of the joint in the deck and curb at a speed of 62.0 mi/h and an angle of 25.0°. Table 5.4 lists events that occurred during Test No. 469468-4-2. Figures D.10 and D.11 in Appendix D.4.2 present sequential photographs during the test.

Table 5.4. Events during Test No. 469468-4-2.

TIME (s)	EVENTS
0.000	Left front corner of vehicle bumper contacts bridge rail
0.037	Vehicle begins to redirect
0.102	Maximum dynamic deflection of rail of 13.0 inches
0.150	Right rear tire leaves the pavement
0.171	Right front tire leaves the pavement
0.194	Rear of vehicle contacts rail
0.196	Vehicle becomes parallel with bridge rail
0.369	Vehicle loses contact with bridge rail while traveling at 47.4 mi/h and trajectory/heading angle of 8.5°/9.2°
0.431	Right front tire recontacts pavement

For longitudinal barriers, it is desirable that the vehicle redirects and exits the barrier within the exit box criteria (not less than 32.8 ft downstream from loss of contact for cars and pickups). The 2270P vehicle exited within the exit box criteria defined in *MASH*. After loss of contact with the barrier, the vehicle yawed counterclockwise and came to rest 143 ft downstream of the point of impact and 10 ft toward traffic lanes.

5.4.5 Damage to Test Installation

Figures 5.12 and 5.13 show the damage to the TxDOT T1W bridge rail. The curb showed slight cracking at post 4 on the field side. The bottom splice bolt failed at the splice upstream of post 5, and the curb and deck were cracked on the field side. The curb at post 5 was deflected toward the field side 1.0 inch, and the deck was pushed down approximately 0.75 inch from the joint to 2 ft downstream of post 5. The U-bolt on the bottom rail of post 6 failed, but no concrete

damage was observed. Working width was 19.3 inches, and the height of maximum working width was 43.2 inches. Maximum dynamic deflection was 13.0 inches, and maximum permanent deformation was 3.0 inches.



Figure 5.12. TxDOT T1W Bridge Rail after Test No. 469468-4-2.



Figure 5.13. Field Side of Post 5 after Test No. 469468-4-2.

5.4.6 Damage to Test Vehicle

Figure 5.14 shows the damage sustained by the vehicle. The front bumper, hood, grill, radiator and support, left front fender, left front tire and rim, left frame rail, left upper and lower A-arms, left front and rear door, left cab corner, left rear exterior bed, left rear tire and rim, and left front floor pan were damaged. Maximum exterior crush to the vehicle was 12.0 inches in the side plane at the left front corner at bumper height. Maximum occupant compartment deformation was 3.0 inches in the left side firewall area. Figure 5.15 shows the interior of the vehicle. Tables D.6 and D.7 in Appendix D.4.1 provide exterior crush and occupant compartment measurements.



Figure 5.14. Test Vehicle after Test No. 469468-4-2.



Figure 5.15. Interior of Test Vehicle for Test No. 469468-4-2.

5.4.7 Occupant Risk Factors

Data from the accelerometer, located at the vehicle center of gravity, were digitized for evaluation of occupant risk, and results are shown in Table 5.5. Figure 5.16 summarizes these data and other pertinent information from the test. Figure D.12 in Appendix D.4.3 shows the vehicle angular displacements, and Figures D.13 through D.18 in Appendix D.4.4 show acceleration versus time traces.

Table 5.5. Occupant Risk Factors for Test No. 469468-4-2.

Occupant Risk Factor	Value	Time
Impact Velocity		
Longitudinal	**19.4 ft/s**	at 0.1003 s on left side of interior
Lateral	**25.6 ft/s**	
Ridedown Accelerations		
Longitudinal	**10.1 g**	0.1003–0.1103 s
Lateral	**9.4 g**	0.2353–0.2453 s
THIV	**34.0 km/h**	at 0.0976 s on left side of interior
	9.4 g	
PHD	**12.5 g**	0.0976–0.1076 s
ASI	**1.66**	0.0616–0.1116 s
Maximum 50-ms Moving Average		
Longitudinal	**−8.6 g**	0.0524–0.1024 s
Lateral	**12.6 g**	0.0425–0.0925 s
Vertical	**2.9 g**	0.2910–0.3410 s
Maximum Roll, Pitch, and Yaw Angles		
Roll	**15°**	0.4383 s
Pitch	**4°**	0.1169 s
Yaw	**37°**	0.6805 s



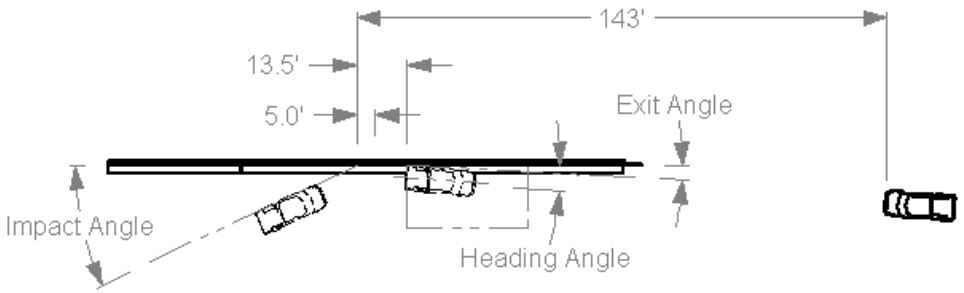

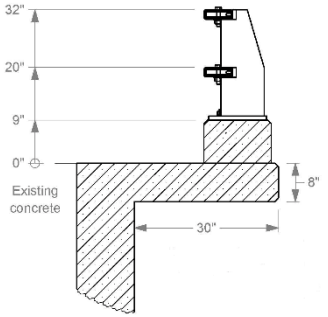

General Information
- Test Agency ..... Texas A&M Transportation Institute (TTI)
- Test Standard Test No. ..... *MASH* Test 3-11
- TTI Test No. 469468-4-2
- Test Date 2018-08-01

Test Article
- Type ..... Longitudinal Barrier - Bridge Rail
- Name ..... TxDOT T1W Bridge Rail
- Installation Length ..... 139 ft
- Material or Key Elements ... 32-in tall rail with two steel rails attached to fabricated steel posts spaced at 9 ft mounted on a 9-in tall x 14-in wide curb cast on an 8-in thick concrete deck.

Soil Type and Condition ..... Concrete Deck, Damp

Test Vehicle
- Type/Designation 2270P
- Make and Model ..... 2012 Dodge RAM 1500 Pickup
- Curb ..... 4877 lb
- Test Inertial ..... 5002 lb
- Dummy ..... None
- Gross Static ..... 5002 lb

Impact Conditions
- Speed ..... 62.0 mi/h
- Angle ..... 25.0°
- Location/Orientation ..... 5.0 ft upstream of deck/curb joint

Impact Severity ..... 115 kip-ft

Exit Conditions
- Speed ..... 47.4 mi/h
- Exit Trajectory/Heading ..... 8.4°/9.2°

Occupant Risk Values
- Longitudinal OIV ..... 19.4 ft/s
- Lateral OIV ..... 25.6 ft/s
- Longitudinal Ridedown ..... 10.1 g
- Lateral Ridedown ..... 9.4 g
- THIV ..... 34.0 km/h
- PHD ..... 12.5 g
- ASI 1.66

Max. 0.050-s Average
- Longitudinal ..... -8.6 g
- Lateral ..... 12.6 g
- Vertical ..... 2.9 g

Post-Impact Trajectory
- Stopping Distance ..... 143 ft downstream 10 ft toward traffic

Vehicle Stability
- Maximum Yaw Angle ..... 37°
- Maximum Pitch Angle ..... 4°
- Maximum Roll Angle ..... 15°
- Vehicle Snagging ..... Slight
- Vehicle Pocketing ..... No

Test Article Deflections
- Dynamic ..... 13.0 inches
- Permanent ..... 3.0 inches
- Working Width ..... 19.3 inches
- Height of Working Width ..... 43.2 inches

Vehicle Damage
- VDS 11-LFQ-3
- CDC 11FLEW3
- Max. Exterior Deformation ..... 12.0 inches
- OCDI LF0030000
- Max. Occupant Compartment Deformation ..... 3.0 inches

Figure 5.16. Summary of Results for *MASH* Test 2-11 on TxDOT C411 Bridge Rail.

5.4.8 Assessment of Results

Table 5.6 provides an assessment of the test based on the applicable safety evaluation criteria for *MASH* Test 3-11.

5.5 CONCLUSIONS

The TxDOT T1W bridge rail contained and redirected the 1100C vehicle. The vehicle did not penetrate, underride, or override the installation. Maximum dynamic deflection during the test was 1.1 inches. There was no permanent deformation. No detached elements, fragments, or other debris were present to penetrate or show potential for penetrating the occupant compartment, or to present hazard to others in the area. Maximum occupant compartment deformation was 3.5 inches in the left firewall area. The 1100C vehicle remained upright during and after the collision event. Maximum roll and pitch angles were 12° and 4°, respectively. Occupant risk factors were within the allowable limits specified in *MASH*. The 1100C vehicle exited within the exit box criteria.

The TxDOT T1W bridge rail contained and redirected the 2270P vehicle. The vehicle did not penetrate, underride, or override the installation. Maximum dynamic deflection during the test was 13.0 inches, and maximum permanent deformation was 3.0 inches. No detached elements, fragments, or other debris were present to penetrate or show potential for penetrating the occupant compartment, or to present hazard to others in the area. Maximum occupant compartment deformation was 3.0 inches in the left firewall area. The 2270P vehicle remained upright during and after the collision event. Maximum roll and pitch angles were 15° and 4°, respectively. Occupant risk factors were within the preferred limits specified in *MASH*. The 2270P vehicle exited within the exit box criteria.

The TxDOT T1W bridge rail performed acceptably according to *MASH* TL-3 evaluation criteria as shown in Table 5.7.

Table 5.6. Performance Evaluation Summary for *MASH* Test 3-11 on TxDOT T1W Bridge Rail.

Test Agency: Texas A&M Transportation Institute Test No.: 469468-4-2 Test Date: 2018-08-01

***MASH* Test 3-11 Evaluation Criteria**	**Test Results**	**Assessment**
Structural Adequacy		
A. Test article should contain and redirect the vehicle or bring the vehicle to a controlled stop; the vehicle should not penetrate, underride, or override the installation although controlled lateral deflection of the test article is acceptable	The TxDOT T1W bridge rail contained and redirected the 2270P vehicle. The vehicle did not penetrate, underride, or override the installation. Maximum dynamic deflection during the test was 13.0 inches, and maximum permanent deformation was 3.0 inches.	Pass
Occupant Risk		
D. Detached elements, fragments, or other debris from the test article should not penetrate or show potential for penetrating the occupant compartment, or present an undue hazard to other traffic, pedestrians, or personnel in a work zone.	No detached elements, fragments, or other debris were present to penetrate or show potential for penetrating the occupant compartment, or to present hazard to others in the area.	Pass
Deformations of, or intrusions into, the occupant compartment should not exceed limits set forth in Section 5.3 and Appendix E of MASH.	Maximum occupant compartment deformation was 3.0 inches in the left firewall area.	
F. The vehicle should remain upright during and after collision. The maximum roll and pitch angles are not to exceed 75 degrees.	The 2270P vehicle remained upright during and after the collision event. Maximum roll and pitch angles were 15° and 4°, respectively.	Pass
H. Longitudinal and lateral occupant impact velocities should fall below the preferred value of 30 ft/s, or at least below the maximum allowable value of 40 ft/s.	Longitudinal OIV was 19.4 ft/s, and lateral OIV was 25.6 ft/s.	Pass
I. Longitudinal and lateral occupant ridedown accelerations should fall below the preferred value of 15.0 Gs, or at least below the maximum allowable value of 20.49 Gs.	Maximum longitudinal 10-ms occupant ridedown was 10.1 g, and maximum lateral 10-ms occupant ridedown was 9.4 g.	Pass
Vehicle Trajectory For redirective devices, it is preferable that the vehicle be smoothly redirected and leave the barrier within the exit box criteria (not less than 32.8 ft for the 1100C and 2270P vehicles) and should be documented.	The 2270P vehicle exited within the exit box criteria.	Documentation only

Table 5.7. Assessment Summary for *MASH* TL-3 Tests on TxDOT T1W Bridge Rail.

Evaluation Factors	Evaluation Criteria	Test No. 469468-4-1	Test No. 469468-4-2
Structural Adequacy	A	S	S
Occupant Risk	D	S	S
	F	S	S
	H	S	S
	I	S	S
	Test No.	***MASH* Test 3-10**	***MASH* Test 3-11**
	Pass/Fail	Pass	Pass

S = Satisfactory
U = Unsatisfactory
N/A = Not Applicable

CHAPTER 6:
ROUND WOOD POST W-BEAM GUARDRAIL

6.1 BACKGROUND*

Details of TxDOT W-beam guardrail or metal beam guard fence (MBGF) is provided on standard GF(31)-14. TxDOT uses a Midwest guardrail system (MGS) with 8-inch deep offset blocks between the posts and W-beam rail. The MGS system has a mounting height of 31 inches to the top of the W-beam and rail splices located midspan between support posts. Three different post types can be used in the TxDOT W-beam guardrail system: a W6×8.5 steel post, a nominal 6-inch × 8-inch rectangular wood post, and a round wood post with a minimum 7-inch diameter.

The steel and rectangular wood post variations of the MGS have been successfully tested to *MASH* criteria in a variety of configurations (*4,5,6*). Various configurations of W-beam guardrail with round wood posts were successfully tested to *NCHRP Report 350* requirements (*7,8*). However, none of these round wood post configurations have been evaluated according to *MASH* criteria. Thus, there was a desire to evaluate the Texas W-beam guardrail with round wood posts following TxDOT standards in accordance with *MASH*.

The primary consideration for the evaluation of the W-beam guardrail with round wood post is structural adequacy. The rectangular and round wood posts that have been successfully tested have a greater section modulus than the nominal 7-inch diameter round wood post used by TxDOT. Thus, *MASH* Test 3-11 with the pickup truck was considered the critical test by TxDOT and TTI researchers. The impact performance with the passenger car should be acceptable based on the reduced snagging severity associated with the geometry of the round post compared to the steel and rectangular wood posts that have been successfully tested.

6.2 SYSTEM DETAILS

6.2.1 Test Article and Installation Details

The test installation consisted of a 31-inch tall W-beam guardrail with round wood posts (posts 3 through 28) installed in *MASH* compacted soil, with a TxDOT downstream anchor terminal (DAT) [GF (31) DAT-14] on each end, for a total installation length of 181 ft-3 inches. Modified wood blockouts (similar to PDB01) for round wood posts were installed on posts 3 through 28 using 18-inch long guardrail bolts, USS flat washers, and recessed guardrail nuts (FBB04).

Standard 12-gauge W-beam guardrail (type RWM04a) was used in the system. The top of the W-beam was 31 inches above grade, and the guardrail splices were located mid-span between every other post. Posts were equally spaced at 6 ft-3 inches.

Guardrail posts 3 through 28 were nominal 7-inch diameter, 6 ft-3 inch–long (including a rounded top) round wood guardrail line posts. The wood blockouts nominally measured

* The opinions/interpretations identified/expressed in Section 6.1 are outside the scope of TTI Proving Ground's A2LA Accreditation.

14 inches tall × 6 inches wide × 8 inches deep, including a routered 3½-inch radius on the post side. These posts were installed 40 inches deep in drilled holes that were backfilled and compacted with soil meeting Grading B of AASHTO standard specification M147-65(2004) "Materials for Aggregate and Soil Aggregate Subbase, Base and Surface Courses."

Each TxDOT GF (31) DAT-14 terminal was 9 ft-4½ inches long as measured from their anchor posts to the W-beam splice between posts 2 and 3 and posts 28 and 29, respectively.

Figure 6.1 presents overall information on the Round Wood Post W-Beam Guardrail, and Figure 6.2 provides photographs of the installation. Appendix E.1 provides further details of the Round Wood Post W-Beam Guardrail.

6.2.2 Material Specifications

Appendix E.2 provides material certification documents for the materials used to install/construct the Round Wood Post W-Beam Guardrail.

6.2.3 Soil Conditions

The test installation was installed in standard soil meeting grading B of AASHTO standard specification M147-65(2004) "Materials for Aggregate and Soil Aggregate Subbase, Base and Surface Courses."

In accordance with Appendix B of *MASH*, soil strength was measured the day of the crash test. During installation of the guardrail for full-scale crash testing, two W6×16 posts were installed in the immediate vicinity of the guardrail using the same fill materials and installation procedures used in the test installation and the prior standard dynamic tests. Table E.1 in Appendix E.3 presents minimum soil strength properties established through the prior dynamic testing performed in accordance with *MASH* Appendix B.

As determined by the tests summarized in Appendix E.3, Table E.1, the minimum post loads required for deflections at 5 inches, 10 inches, and 15 inches, measured at a height of 25 inches, are 3940 lb, 5500 lb, and 6540 lb, respectively (90 percent of static load for the initial standard installation). On the day of the test, November 27, 2017, loads on the post at deflections of 5 inches, 10 inches, and 15 inches were 7676 lbf, 8686 lbf, and 8737 lbf, respectively. Table E.2 in Appendix E.3 shows the strength of the backfill material in which the guardrail was installed met minimum *MASH* requirements.

6.3 *MASH* TEST 3-11 (CRASH TEST NO. 469468-5-1)

6.3.1 Test Designation and Actual Impact Conditions

MASH Test 3-11 involves a 2270P vehicle weighing 5000 lb ±110 lb impacting the CIP of the guardrail at an impact speed of 62 mi/h ±2.5 mi/h and an angle of 25° ±1.5°. The target CIP for *MASH* Test 3-11 on the Round Wood Post W-Beam Guardrail was 12 ft ±1 ft upstream of post 14 (which corresponds to 6 inches downstream of post 12 as shown in Figure 6.3). This point was selected using information in *MASH* section 2.3.2.

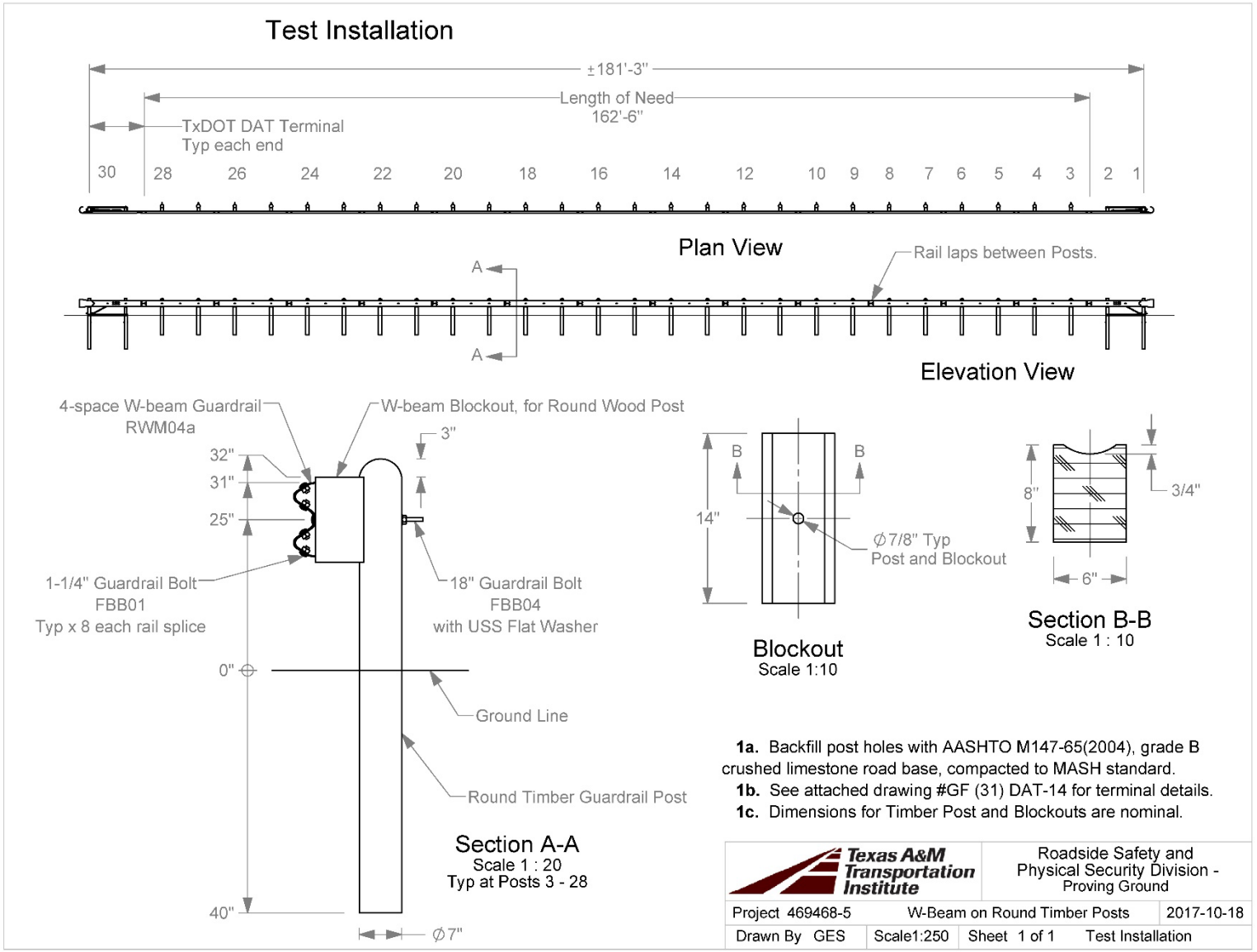

Figure 6.1. Overall Details of Round Wood Post W-Beam Guardrail.



Figure 6.2. Round Wood Post W-Beam Guardrail prior to Testing.

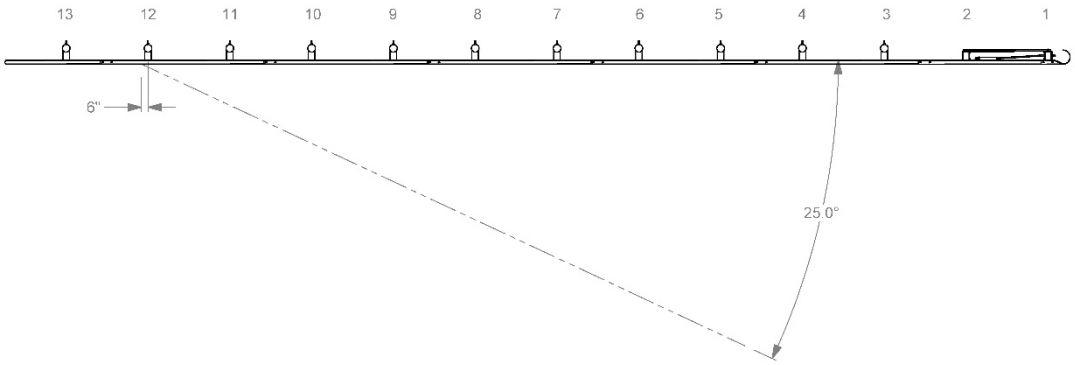

Figure 6.3. Target CIP for *MASH* Test 3-11 on the Round Wood Post W-Beam Guardrail.

The 2012 Dodge RAM 1500 pickup truck used in the test weighed 5029 lb, and the actual impact speed and angle were 64.2 mi/h and 25.6°, respectively. The actual impact point was at post 12. Minimum target IS was 106 kip-ft, and actual IS was 129 kip-ft.

6.3.2 Weather Conditions

The test was performed on the morning of November 27, 2017. Weather conditions at the time of testing were as follows: wind speed: 5 mi/h; wind direction: 167° (vehicle was traveling in a southwesterly direction); temperature: 67°F; relative humidity: 54 percent.

6.3.3 Test Vehicle

Figures 6.4 and 6.5 show the 2012 Dodge RAM 1500 pickup truck used for the crash test. The vehicle's test inertia weight was 5029 lb, and its gross static weight was 5029 lb. The height to the lower edge of the vehicle bumper was 11.75 inches, and the height to the upper edge of the bumper was 27.0 inches. The height to the vehicle's center of gravity was 29.0 inches. Tables E.3 and E.4 in Appendix E.4 give additional dimensions and information on the vehicle. The vehicle was directed into the installation using a cable reverse tow and guidance system, and was released to be freewheeling and unrestrained just prior to impact.



Figure 6.4. Round Wood Post W-Beam Guardrail/Test Vehicle Geometrics for Test No. 469468-5-1.



Figure 6.5. Test Vehicle before Test No. 469468-5-1.

6.3.4 Test Description

The test vehicle impacted the Round Wood Post W-Beam Guardrail at post 12 at a speed of 64.2 mi/h and an angle of 25.6°. Table 6.1 lists events that occurred during Test No. 469468-5-1. Figures E.1 and E.2 in Appendix E.5 present sequential photographs during the test.

Table 6.1. Events during Test No. 469468-5-1.

TIME (s)	EVENTS
0.000	Right front corner of vehicle bumper contacts guardrail
0.012	Post 12 begins to deflect to field side and then fractures
0.021	Post 13 begins to deflect to field side and then fractures
0.031	Post 11 begins to deflect to field side and then fractures
0.035	Vehicle begins to redirect
0.041	Blockout and bolt release from post 12
0.050	Post 14 begins to deflect to field side and then fractures
0.065	Blockout and bolt release from post 13
0.068	Post 15 deflects to field side and then fractures
0.084	Right front tire impacts post 13 and rides up and over post
0.085	Post 12 fully fractured at grade level
0.106	Blockout and bolt release from post 14
0.113	Post 16 begins to deflect to field side
0.119	Post 16 fractures on traffic side of post about 6 inches above grade level
0.169	Vehicle begins to override guardrail at post 15
0.248	Right rear quarter panel and bumper impacts rail between posts 12 and 13
0.350	Right rear wheel rides over guardrail at post 16-17
0.375	Vehicle becomes parallel with guardrail
0.595	Vehicle overrides and loses contact with guardrail while traveling at 51.2 mi/h
0.598	Right rear wheel lands back on soil behind guardrail
0.739	Right front wheel lands back on soil behind guardrail
0.930	Vehicle lands on right side and begins to roll

For longitudinal barriers, it is desirable that the vehicle redirects and exits the barrier within the exit box criteria (not less than 32.8 ft downstream from impact for cars and pickups). The 2270P vehicle vaulted and penetrated behind the guardrail and did not redirect or exit within the exit box criteria defined in *MASH*. After overriding the guardrail, the vehicle came to rest 160 ft downstream of the point of impact and 11 ft behind the guardrail.

6.3.5 Damage to Test Installation

Figures 6.6 through 6.9 show damage to the Round Wood Post W-Beam Guardrail. Post 1 was pulled upstream 4.0 inches, and post 2 was pulled upstream 2.6 inches. The W-beam rail element released from posts 1 through 18. Post 11 was pulled upstream and pushed toward field side 0.5 inch. Posts 12 through 17 fractured at ground level. Post 12 with blockout attached was resting 10 ft toward the field side, and post 13 was resting under the rail element. The blockout on post 14 split, and the post was resting 7 ft toward the traffic side. Post 15 and 16 were resting on the field side close to their initial locations, and the blockout of post 16 was split. Post 17 was resting 10 ft downstream and 7 ft toward the field side of its initial position. The soil around post 18 was disturbed, the blockout was split and released from the post, but the post was intact. The vehicle came to rest 11 ft behind the installation. Maximum dynamic deflection during the test was 4.8 ft, and maximum permanent deformation was 3.0 ft.



Figure 6.6. Round Wood Post W-Beam Guardrail/Test Vehicle after Test No. 469468-5-1.



Figure 6.7. Upstream Terminal after Test No. 469468-5-1.



Figure 6.8. Posts 11 through 17 after Test No. 469468-5-1.



Figure 6.9. Round Wood Post W-Beam Guardrail after Test No. 469468-5-1.

6.3.6 Damage to Test Vehicle

Figure 6.10 shows the damage sustained by the vehicle. The front bumper, hood, left and right front fenders, left and right front tires and rims, left and right front and rear doors, left and right exterior bed, rear bumper, roof, and windshield were damaged. Maximum exterior crush to the vehicle was 10.0 inches in the front plane at the right front corner at bumper height. Maximum occupant compartment deformation was 5.0 inches in the right front floor pan. Figure 6.11 shows the interior of the vehicle. Tables E.5 and E.6 in Appendix E.4 provide exterior crush and occupant compartment measurements.



Figure 6.10. Test Vehicle after Test No. 469468-5-1.



Figure 6.11. Interior of Test Vehicle for Test No. 469468-5-1.

6.3.7 Occupant Risk Factors

Data from the accelerometer, located at the vehicle center of gravity, were digitized for evaluation of occupant risk, and results are shown in Table 6.2. Figure 6.12 summarizes these data and other pertinent information from the test. Figure E.3 in Appendix E.5 shows the vehicle angular displacements, and Figures E.4 through E.9 in Appendix E.6 show acceleration versus time traces.

Table 6.2. Occupant Risk Factors for Test No. 469468-5-1.

Occupant Risk Factor	Value	Time
OIV		
Longitudinal	**14.1 ft/s**	at 0.1745 s on right side of interior
Lateral	**14.8 ft/s**	
Occupant Ridedown Accelerations		
Longitudinal	**6.0 g**	0.2970–0.3070 s
Lateral	**17.0 g**	3.6466–3.6566 s
THIV	**21.1 km/h** **5.9 m/s**	at 0.1685 s on right side of interior
PHD	**17.1 g**	3.6465–3.6565 s
ASI	**1.39**	3.6530–3.7030 s
Maximum 50-ms Moving Average		
Longitudinal	**−4.2 g**	0.1396–0.1896 s
Lateral	**−10.7 g**	3.6319–3.6819 s
Vertical	**7.0 g**	1.9069–1.9569 s
Maximum Roll, Pitch, and Yaw Angles		
Yaw	**121°**	3.7231 s
Pitch	**21°**	3.0410 s
Roll	**1265°**	5.0000 s



0.000 s

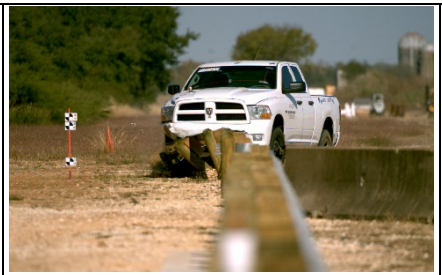

0.200 s

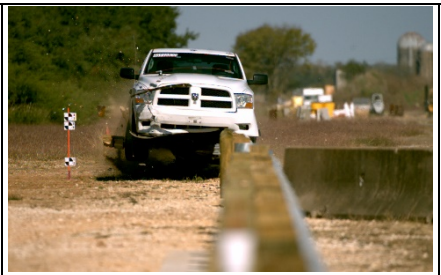

0.400 s



0.700 s

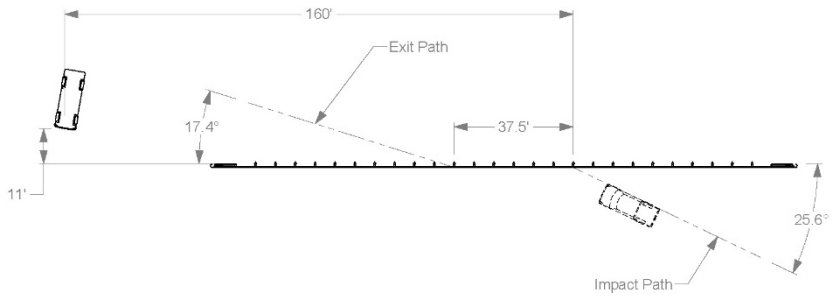

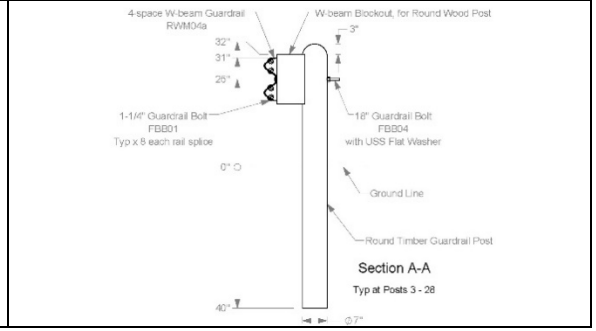

General Information
- Test Agency ..... Texas A&M Transportation Institute (TTI)
- Test Standard Test No. ..... *MASH* Test 3-11
- TTI Test No. 469468-5-1
- Test Date 2017-11-27

Test Article
- Type ..... Guardrail
- Name ..... TxDOT Round Wood Post Guardrail
- Installation Length ..... 181 ft 3 inches
- Material or Key Elements ... 31-inch tall W-beam guardrail with nominal 7-in diameter round wood posts at 6 ft-3 in spacing embedded 40 in

Soil Type and Condition ..... AASHTO M147-65(2004), grading B Soil (crushed limestone), Damp

Test Vehicle
- Type/Designation 2270P
- Make and Model ..... 2012 Dodge RAM 1500 pickup truck
- Curb ..... 4936 lb
- Test Inertial ..... 5029 lb
- Dummy ..... No dummy
- Gross Static ..... 5029 lb

Impact Conditions
- Speed ..... 64.2 mi/h
- Angle ..... 25.6°
- Location/Orientation ..... At post 12

Impact Severity ..... 129 kip-ft

Exit Conditions
- Speed ..... 51.2 mi/h
- Trajectory/Heading Angle ... 17.4°/16.4°

Occupant Risk Values
- Longitudinal OIV ..... 14.1 ft/s
- Lateral OIV ..... 14.8 ft/s
- Longitudinal Ridedown ..... 6.0 g
- Lateral Ridedown ..... 17.0 g
- THIV ..... 21.1 km/h
- PHD ..... 17.1 g
- ASI 1.39

Max. 0.050-s Average
- Longitudinal ..... -4.2 g
- Lateral ..... -10.7 g
- Vertical ..... 7.0 g

Post-Impact Trajectory
- Stopping Distance ..... 160 ft downstream
  11 ft twd field side

Vehicle Stability
- Maximum Yaw Angle ..... 121°
- Maximum Pitch Angle ..... 21°
- Maximum Roll Angle ..... Rolled 3.5 revolutions
- Vehicle Snagging ..... No
- Vehicle Pocketing ..... No

Test Article Deflections
- Dynamic ..... 57.4 inches
- Permanent ..... 36.0 inches
- Working Width ..... NA
- Height of Working Width ..... NA

Vehicle Damage
- VDS ..... 01R&T2
- CDC 01FREK3/01FROA3
- Max. Exterior Deformation ..... 10.0 inches
- OCDI AS0200000
- Max. Occupant Compartment Deformation ..... 5.0 inches

Figure 6.12. Summary of Results for *MASH* Test 3-11 on Round Wood Post W-Beam Guardrail.

6.3.8 Assessment of Test Results

Table 6.3 provides an assessment of the test based on the applicable safety evaluation criteria for *MASH* Test 3-11.

6.4 CONCLUSIONS

The Round Wood Post W-Beam Guardrail did not contain or redirect the 2270P vehicle. The vehicle overrode the installation. Maximum dynamic deflection prior to override of the installation was 4.8 ft. Post and blockout fragments were present but did not penetrate or show potential for penetrating the occupant compartment, or to present undue hazard to others in the area. Maximum occupant compartment deformation was 5.0 inches in the right front floor pan area. The 2270P vehicle rolled 3.5 revolutions after overriding the installation. Occupant risk factors were within the limits specified in *MASH*.

Due to override of the installation and subsequent rollover of the 2270P vehicle, the Round Wood Post W-Beam Guardrail did not perform acceptably for *MASH* Test 3-11.

Table 6.3. Performance Evaluation Summary for *MASH* Test 3-11 on Round Wood Post W-Beam Guardrail.

Test Agency: Texas A&M Transportation Institute | Test No.: 469468-5-1 | Test Date: 2017-11-27

***MASH* Test 3-11 Evaluation Criteria**	**Test Results**	**Assessment**
Structural Adequacy		
A. Test article should contain and redirect the vehicle or bring the vehicle to a controlled stop; the vehicle should not penetrate, underride, or override the installation although controlled lateral deflection of the test article is acceptable	The Round Wood Post W-Beam Guardrail did not contain or redirect the 2270P vehicle. The vehicle overrode the installation. Maximum dynamic deflection prior to override of the installation was 4.8 ft.	Fail
Occupant Risk		
D. Detached elements, fragments, or other debris from the test article should not penetrate or show potential for penetrating the occupant compartment, or present an undue hazard to other traffic, pedestrians, or personnel in a work zone. *Deformations of, or intrusions into, the occupant compartment should not exceed limits set forth in Section 5.3 and Appendix E of MASH.*	Post and blockout fragments were present but did not penetrate or show potential for penetrating the occupant compartment, or to present undue hazard to others in the area. Maximum occupant compartment deformation as 5.0 inches in the right front floor pan area.	Pass
F. The vehicle should remain upright during and after collision. The maximum roll and pitch angles are not to exceed 75 degrees.	The 2270P vehicle rolled 3.5 revolutions after overriding the installation.	Fail
H. Longitudinal and lateral occupant impact velocities should fall below the preferred value of 30 ft/s, or at least below the maximum allowable value of 40 ft/s.	Longitudinal OIV was 14.1 ft/s, and lateral OIV was 14.8 ft/s.	Pass
I. Longitudinal and lateral occupant ridedown accelerations should fall below the preferred value of 15.0 Gs, or at least below the maximum allowable value of 20.49 Gs.	Maximum longitudinal occupant ridedown acceleration was 6.0 g, and maximum lateral occupant ridedown acceleration was 17.0 g.	Pass
Vehicle Trajectory		
For redirective devices, it is preferable that the vehicle be smoothly redirected and leave the barrier within the exit box criteria (not less than 32.8 ft for the 1100C and 2270P vehicles) and should be documented.	The 2270P vehicle overrode the guardrail and did not exit the guardrail within the exit box criteria.	Documentation only

CHAPTER 7:
TXDOT 42-INCH SINGLE SLOPE CONCRETE MEDIAN BARRIER WITH LIGHT POLE

7.1 BACKGROUND*

Light poles are sometimes attached to concrete median barrier to provide desired roadway illumination. TxDOT has a standard detail sheet for this practice for both a 32-inch concrete F-shape median barrier (CSB(4)-10) and a 42-inch single slope median barrier (SSCB(4)-10).

The 32-inch F-shape barrier does not meet the minimum 36-inch height requirement for a *MASH* TL-4 barrier; therefore, it would only be suitable to test this system to *MASH* TL-3. The 42-inch single slope barrier accommodates *MASH* TL-4 when proper anchorage or lateral support is provided to the barrier.

MASH Test 4-12 on a 42-inch single slope concrete median barrier with light pole was considered more critical. The box of the 10000S single unit truck will have significant interaction with the light pole at a substantial height. This will evaluate the structural adequacy of the median barrier mounted light pole. It is desirable for the tall light pole to maintain structural integrity and not collapse, bend, or otherwise release from the barrier and fall across oncoming traffic. *MASH* Tests 4-11 and 4-10 were not considered necessary because the single slope profile is considered a crashworthy shape and, given the height of the barrier, the test vehicles would not engage the barrier-mounted light pole.

7.2 TEST ARTICLE AND INSTALLATION DETAILS

The test installation was 120 ft long and consisted of a 42-inch-tall reinforced single slope concrete barrier (SSCB) with a light pole mounted approximately 40 ft from one end. The parapet was 9¼ inches wide at the top for a distance of 24 inches centered at the light pole, tapering to 8 inches wide over 48 inches of length each direction. The SSCB was 24 inches wide at bottom for its full length. The 10-ft tapered section to which the light pole was mounted was secured to an 8-inch thick × 24-inch wide reinforced slab. A 1-inch thick × 9 ft wide layer of asphalt was placed on both sides of the installation to provide lateral support for the SSCB. Thus, the height of the barrier above the asphalt overlay was 41 inches.

The light pole was mounted to the top of the SSCB following details and specifications of standard sheet RIP(2)-11. The light pole was supplied and installed by a subcontractor under supervision of TTI Proving Ground. The light pole was secured to the top of the barrier using the appropriate concrete barrier anchor bolt assembly detail. The 43-ft tall pole was configured with double mast arms that had a nominal length of 12 ft. The effective mounting height of the luminaires was 48 ft above the top of the barrier.

Figure 7.1 presents overall information on the TxDOT 42-inch single slope concrete median barrier with light pole, and Figure 7.2 provides photographs of the installation. Appendix F.1 provides further details of the TxDOT 42-inch single slope concrete median barrier with light pole.

* The opinions/interpretations identified/expressed in Section 7.1 are outside the scope of TTI Proving Ground's A2LA Accreditation.

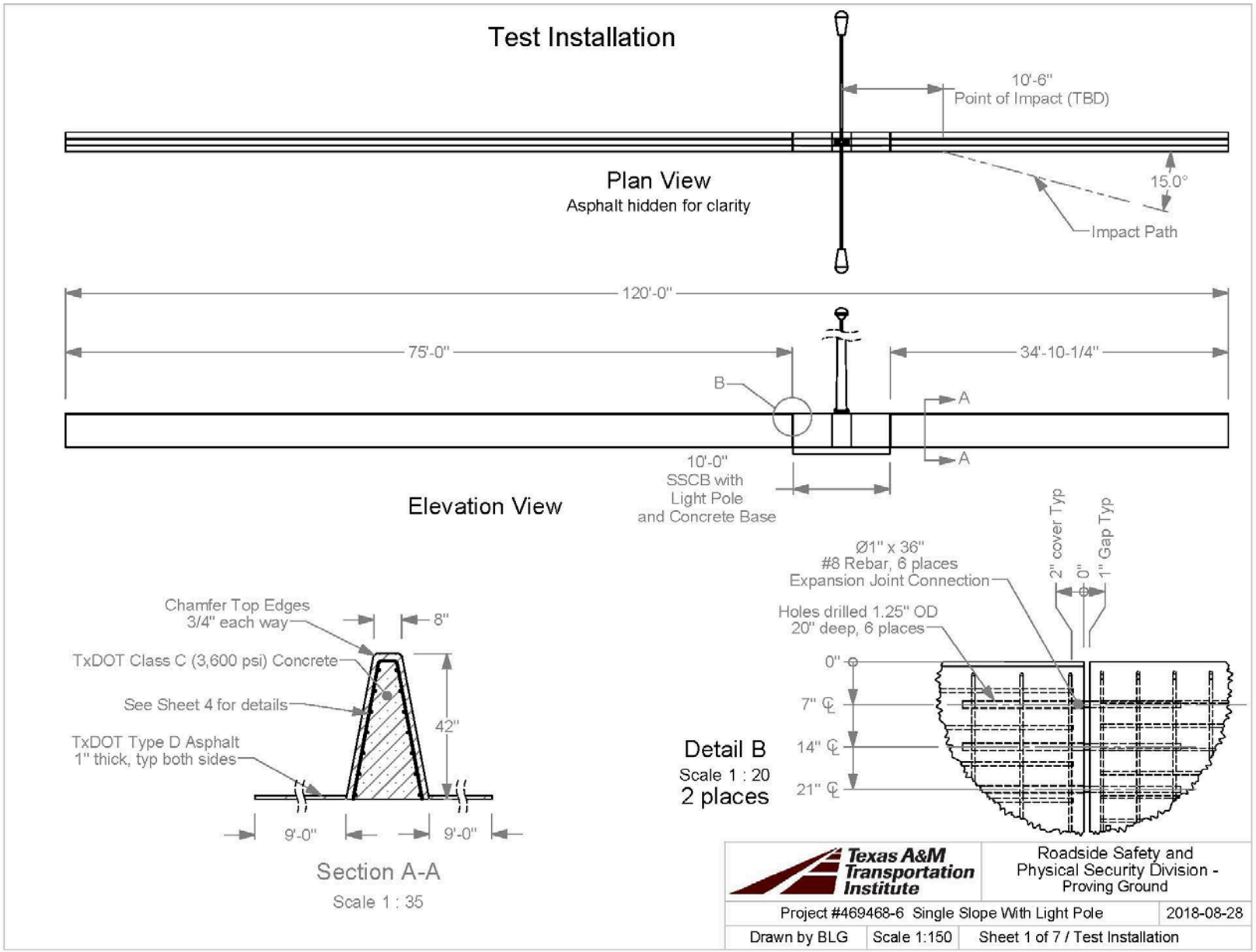

Figure 7.1. Overall Details of TxDOT 42-Inch Single Slope Concrete Median Barrier with Light Pole.



Figure 7.2. TxDOT 42-Inch Single Slope Concrete Median Barrier with Light Pole prior to Testing.

7.3 MATERIAL SPECIFICATIONS

Appendix F.2 provides material certification documents for the materials used to install/construct the TxDOT C412 bridge rail.

7.4 MASH TEST 3-12 (469468-6-1)

7.4.1 Test Designation and Actual Impact Conditions

MASH Test 4-12 involves a 10000S vehicle weighing 22,000 lb ±660 lb impacting the CIP of the barrier at an impact speed of 56 mi/h ±2.5 mi/h and an angle of 15° ±1.5°. The CIP for *MASH* Test 4-12 on the TxDOT 42-inch single-slope concrete barrier with light pole was 10.6 ft ±1 ft upstream of the light pole. This distance was determined to generate the maximum lateral penetration of the box of the single unit truck based on video analysis of *MASH* Test 4-12 on a 42-inch single slope barrier (*9*).

The 2013 International 4300 single-unit truck used in the test weighed 22,100 lb, and the actual impact speed and angle were 57.2 mi/h and 14.5°, respectively. The actual impact point was 10.4 ft upstream of the light pole. Minimum target IS was 142 kip-ft, and actual IS was 152 kip-ft.

7.4.2 Weather Conditions

The test was performed on the morning of August 28, 2018. Weather conditions at the time of testing were as follows: wind speed: 6 mi/h; wind direction: 219° (vehicle was traveling in a southwesterly direction); temperature: 88°F; relative humidity: 68 percent.

7.4.3 Test Vehicle

Figures 7.3 and 7.4 show the 2013 International 4300 single-unit truck used for the crash test. The vehicle's test inertia weight was 22,100 lb. The height to the lower edge of the vehicle bumper was 16.25 inches, and the height to the upper edge of the bumper was 33.25 inches. The height to the center of gravity of the vehicle's ballast was 63.25 inches. Table F.1 in Appendix F.3 gives additional dimensions and information on the vehicle. The vehicle was directed into the installation using a cable reverse tow and guidance system, and was released to be freewheeling and unrestrained just prior to impact.



Figure 7.3. TxDOT 42-Inch Single Slope Concrete Median Barrier with Light Pole/Test Vehicle Geometrics for Test No. 469468-6-1.



Figure 7.4. Test Vehicle before Test No. 469468-6-1.

7.4.4 Test Description

The test vehicle impacted the 42-inch single slope barrier 10.4 ft upstream of the light pole at a speed of 57.2 mi/h and an angle of 14.5°. Table 7.1 lists events that occurred during Test No. 469468-6-1. Figure F.1 in Appendix F.33 presents sequential photographs during the test.

Table 7.1. Events during Test No. 469468-6-1.

TIME (s)	EVENTS
0.000	Right front corner of vehicle bumper contacts barrier
0.051	Right front bumper reaches joint in barrier
0.900	Vehicle begins to redirect
0.110	Right front of vehicle contacts light pole
0.122	Right front fender begins to wrap around light pole
0.206	Right front box contacts light pole
0.225	Right side wall of box begins to separate from the vehicle
0.262	Top left of box begins to open at top seam and roof of box begins to tear off
0.278	Vehicle becomes parallel with barrier
0.449	Light pole reaches rear roll-up door of box
0.481	Right side of rear door begins to pull off right side wall
0.489	Left side of rear door begins to pull off left side wall
0.555	Door and right side wall separate from vehicle

For longitudinal barriers, it is desirable that the vehicle redirects and exits the barrier within the exit box criteria (not less than 65.6 ft downstream from loss of contact for heavy vehicles). The 10000S vehicle exited within the exit box criteria defined in *MASH*. After loss of contact with the barrier, the vehicle yawed counterclockwise and came to rest 298 ft downstream of the point of impact and 2 ft toward traffic lanes.

7.4.5 Damage to Test Installation

Figure 7.5 shows the damage to the TxDOT 42-inch Single Slope Concrete Median Barrier with Light Pole. The barrier had gouge marks in the impact area, but there were no cracks or other damage observed. The light pole remained upright and intact with some marring around the base. The light fixtures disconnected from the luminaire arms and fell to the ground on each side of the barrier. The concrete around the upstream field side anchor bolt spalled off. Working width was 80.5 inches, and the height of maximum working width was 130.0 inches. Maximum dynamic deflection was not obtainable due to the vehicle obstructing the view of the barrier. There was no measurable permanent deformation.



Figure 7.5. TxDOT 42-Inch Single Slope Concrete Median Barrier with Light Pole/Test Vehicle after Test No. 469468-6-1.



Figure 7.6. TxDOT 42-Inch Single Slope Concrete Median Barrier after Test No. 469468-6-1.



Figure 7.7. Light Pole after Test No. 469468-6-1.

7.4.6 Damage to Test Vehicle

Figure 7.8 shows the damage to the vehicle. The front bumper, hood, right front tire and rim, front axle, front springs and U-bolts, right door, right fuel tank and side steps, right rear outer tire and rim were damaged. The right side of the box, roof of the box, rear of the box, and the roll-up rear door were pulled off of the bed of the truck. Maximum exterior crush to the exterior of the vehicle was 14.0 inches in the side plane at the right front corner at bumper height, and maximum occupant compartment deformation was 5.0 inches in the right front corner of the floor pan. Figure 7.9 shows the interior of the vehicle.

7.4.7 Occupant Risk Factors

Data from the accelerometer, located at the vehicle center of gravity, were digitized for information purposes only, and results are shown in Table 7.2. Figure 7.10 summarizes these data and other pertinent information from the test. Figure F.2 in Appendix F.5 shows the vehicle angular displacements, and Figures F.3 through F.8 in Appendix F.6 show acceleration versus time traces.



Figure 7.8. Test Vehicle after Test No. 469468-6-1.



Figure 7.9. Interior of Test Vehicle after Test No. 469468-6-1.

Table 7.2. Occupant Risk Factors for Test No. 469468-6-1.

Occupant Risk Factor	Value	Time
OIV		
Longitudinal	**6.9 ft/s**	at 0.2188 s on right side of interior
Lateral	**11.2 ft/s**	
Occupant Ridedown Accelerations		
Longitudinal	**11.7 g**	0.2849–0.2949 s
Lateral	**10.0 g**	0.2289–0.2389 s
THIV	**14.7 km/h**	at 0.2126 s on right side of interior
	4.1 m/s	
PHD	**12.3 g**	0.2847–0.2947 s
ASI	**0.56**	0.3069–0.3569 s
Maximum 50-ms Moving Average		
Longitudinal	**−4.2 g**	0.2846–0.3346 s
Lateral	**−4.8 g**	0.2907–0.3407 s
Vertical	**2.5 g**	0.1662–0.2162 s
Maximum Roll, Pitch, and Yaw Angles		
Roll	**30°**	0.7333 s
Pitch	**33°**	4.8915 s
Yaw	**37°**	3.0135 s



0.000 s

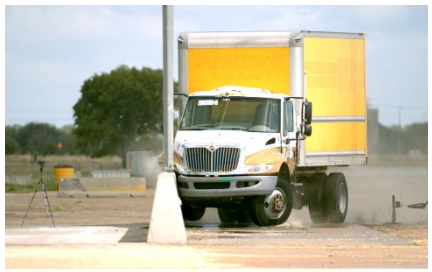

0.100 s



0.300 s



0. 500 s

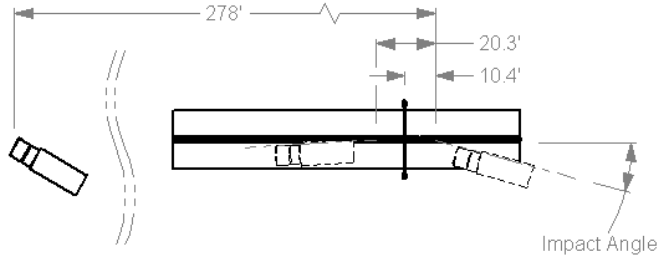

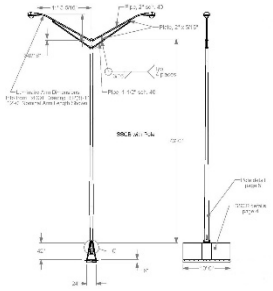

General Information
- Test Agency ..... Texas A&M Transportation Institute (TTI)
- Test Standard Test No. ..... *MASH* Test 4-12
- TTI Test No. 469468-6-1
- Test Date 2018-08-28

Test Article
- Type ..... Median Barrier with Light Pole and 2 luminaire arms
- Name ..... 42-inch Single Slope CMB
- Installation Length ..... 120 ft
- Material or Key Elements ... 43-ft tall light pole with double mast arms mounted on 42-inch single slope concrete median barrier keyed in 1-in asphalt

Soil Type and Condition ..... Concrete surface, damp

Test Vehicle
- Type/Designation 10000S
- Make and Model ..... 2013 International 4300
- Curb ..... 13,980 lb
- Test Inertial ..... 22,100 lb
- Dummy ..... No dummy
- Gross Static ..... 22,100 lb

Impact Conditions
- Speed ..... 57.2 mi/h
- Angle ..... 14.5°
- Location/Orientation ..... 10.4 ft upstream of Light Support

Impact Severity ..... 152 kip-ft

Exit Conditions
- Speed ..... Out of view
- Angle ..... Out of view

Occupant Risk Values
- Longitudinal OIV ..... 6.9 ft/s
- Lateral OIV ..... 11.2 ft/s
- Longitudinal Ridedown ..... 11.7 g
- Lateral Ridedown ..... 10.0 g
- THIV ..... 14.7 km/h
- PHD ..... 12.3 g
- ASI 0.56

Max. 0.050-s Average
- Longitudinal ..... -4.2 g
- Lateral ..... -4.8 g
- Vertical ..... 2.5 g

Post-Impact Trajectory
- Stopping Distance ..... 298 ft downstream 2 ft toward traffic

Vehicle Stability
- Maximum Yaw Angle ..... 37°
- Maximum Pitch Angle ..... 33°
- Maximum Roll Angle ..... 30°
- Vehicle Snagging ..... Slight
- Vehicle Pocketing ..... No

Test Article Deflections
- Dynamic ..... Not obtainable
- Permanent ..... None measurable
- Working Width ..... 80.5 inches
- Working Width Height ..... 130.0 inches

Vehicle Damage
- VDS ..... NA
- CDC 01FREW4
- Max. Exterior Deformation ..... 14.0 inches
- OCDI ..... NA
- Max. Occupant Compartment Deformation ..... 5.0 inches

Figure 7.10. Summary of Results for *MASH* Test 5-12 on TxDOT 42-Inch Single Slope Concrete Median Barrier with Light Pole.

7.4.8 Assessment of Test Results

Table 7.3 provides an assessment of the test based on the applicable safety evaluation criteria for *MASH* Test 4-12.

7.5 CONCLUSIONS

The TxDOT 42-inch Single Slope Concrete Median Barrier with Light Pole contained and redirected the 10000S vehicle. The vehicle did not penetrate, underride, or override the installation. Maximum dynamic deflection during the test was not obtainable due to vehicle obstruction of view. No detached elements, fragments, or other debris from the test article were present to penetrate or show potential for penetrating the occupant compartment or to present hazard to others in the area. The 10000S vehicle remained upright during and after the collision event. Maximum roll was 30°. The 10000S vehicle exited within the exit box criteria.

The TxDOT 42-inch Single Slope Concrete Median Barrier with Light Pole performed acceptably for *MASH* Test 4-12.

Table 7.3. Performance Evaluation Summary for *MASH* Test 5-12 on TxDOT 42-Inch Single Slope Concrete Median Barrier with Light Pole.

Test Agency: Texas A&M Transportation Institute Test No.: 469468-6-1 Test Date: 2018-08-28

***MASH* Test 4-12 Evaluation Criteria**	**Test Results**	**Assessment**
Structural Adequacy		
A. Test article should contain and redirect the vehicle or bring the vehicle to a controlled stop; the vehicle should not penetrate, underride, or override the installation although controlled lateral deflection of the test article is acceptable	The TxDOT 42-inch Single Slope Concrete Median Barrier with Light Pole contained and redirected the 10000S vehicle. The vehicle did not penetrate, underride, or override the installation. Maximum dynamic deflection during the test was not obtainable due to vehicle obstruction of view.	Pass
Occupant Risk		
D. Detached elements, fragments, or other debris from the test article should not penetrate or show potential for penetrating the occupant compartment, or present an undue hazard to other traffic, pedestrians, or personnel in a work zone.	No detached elements, fragments, or other debris from the test article were present to penetrate or show potential for penetrating the occupant compartment or to present hazard to others in the area.	Pass
Deformations of, or intrusions into, the occupant compartment should not exceed limits set forth in Section 5.3 and Appendix E of MASH.	Maximum occupant compartment deformation was 5.0 inches in the right front corner of the floor pan.	
G. It is preferable, although not essential, that the vehicle remain upright during and after collision.	The 10000S vehicle remained upright during and after the collision event. Maximum roll was 30°.	Pass
Vehicle Trajectory		
For redirective devices, it is preferable that the vehicle be smoothly redirected and leave the barrier within the exit box criteria (not less than 65.6 ft for the 36000V vehicle) and should be documented.	The 10000S vehicle exited within the exit box criteria.	Documentation only

CHAPTER 8:
SKID-MOUNTED SINGLE-POST PERFORATED STEEL TUBE TEMPORARY SIGN SUPPORT

8.1 BACKGROUND*

The skid-mounted single perforated steel tube temporary sign support system is designed for use with a 9 sq. ft lightweight, extruded, hollow-core plastic sign substrate. Details can be found on TxDOT Barricade and Construction sheet BC(5)-14. The single support system was considered acceptable based on the original development and testing of a similar dual post system under *NCHRP Report 350* at both 0° and 90°, which is a requirement of a free-standing work zone traffic control device (*10*).

Although the small passenger car has changed under *MASH*, its performance in frontal impacts with large, skid-mounted, breakaway sign support systems is not expected to differ appreciably. Therefore, only test designation 3-72 with the 2270P pickup truck in both the 0° and 90° impact orientations was considered necessary to assess *MASH* compliance.

MASH states "that lightweight free-standing features cannot cause sufficient velocity change to result in failure of the test under occupant risk criteria. Therefore, Tests 3-71 and 3-72 can be conducted without the instrumentation necessary for determining occupant risk whenever the test article has a total weight of 220 lb (100 kg) or less." Consequently, the pickup truck test vehicle was not instrumented in the testing of the free-standing skid-mounted single perforated steel tube temporary sign support system.

8.2 SYSTEM DETAILS

These test installations consisted of three main parts. A 36-inch square extruded, hollow-core plastic sign panel was secured to an approximately 11 ft long section of 1¾-inch square perforated steel tubing with two hex bolts with fender washers under the head of the bolt. This tubing was inserted into a 4-ft long sleeve fabricated from 2-inch square perforated steel tubing and secured with a bolt, nut, and fender washers such that the bottom corner of the sign was approximately 84 inches above grade. The sleeve was welded to an I-shaped skid fabricated from 1¾-inch and 2-inch square perforated steel tubing. All square perforated tubing was 12 gauge. Excluding the four 40-lb sandbags, the test article weighed 63 lb.

The skid-mounted sign support systems were placed on a concrete apron but were not secured to it. The installation for Test No. 469468-7-1 was placed with the sign panel perpendicular to the vehicle path. For Test No. 469468-7-2, the sign panel was oriented parallel to the vehicle path.

Figure 8.1 presents overall information on the skid-mounted single perforated steel tube temporary sign support system, and Figure 8.2 provides photographs of the installation.

* The opinions/interpretations identified/expressed in Section 8.1 are outside the scope of TTI Proving Ground's A2LA Accreditation.

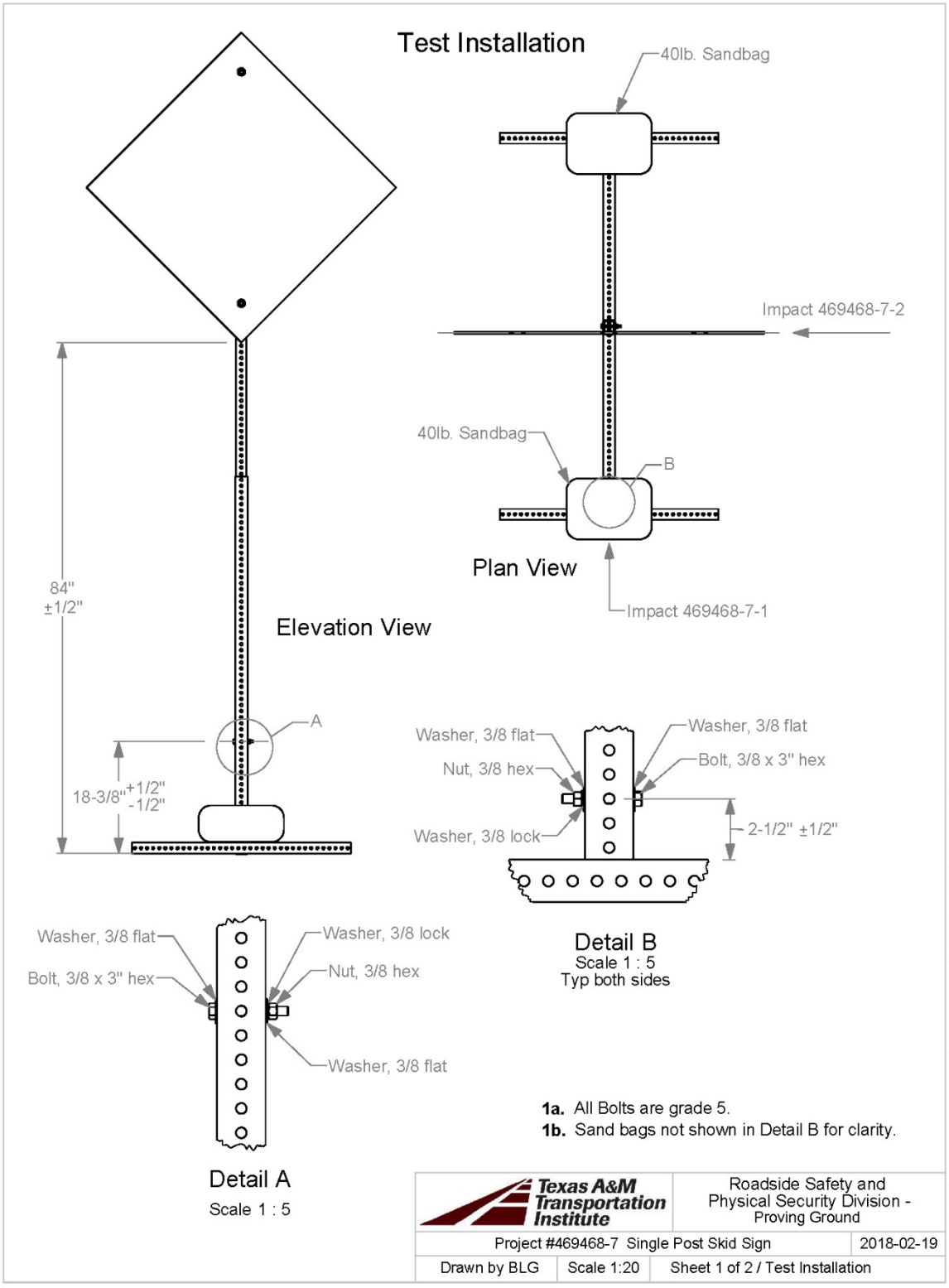

Figure 8.1. Overall Details of Skid-Mounted Single Perforated Steel Tube Temporary Sign Support System.

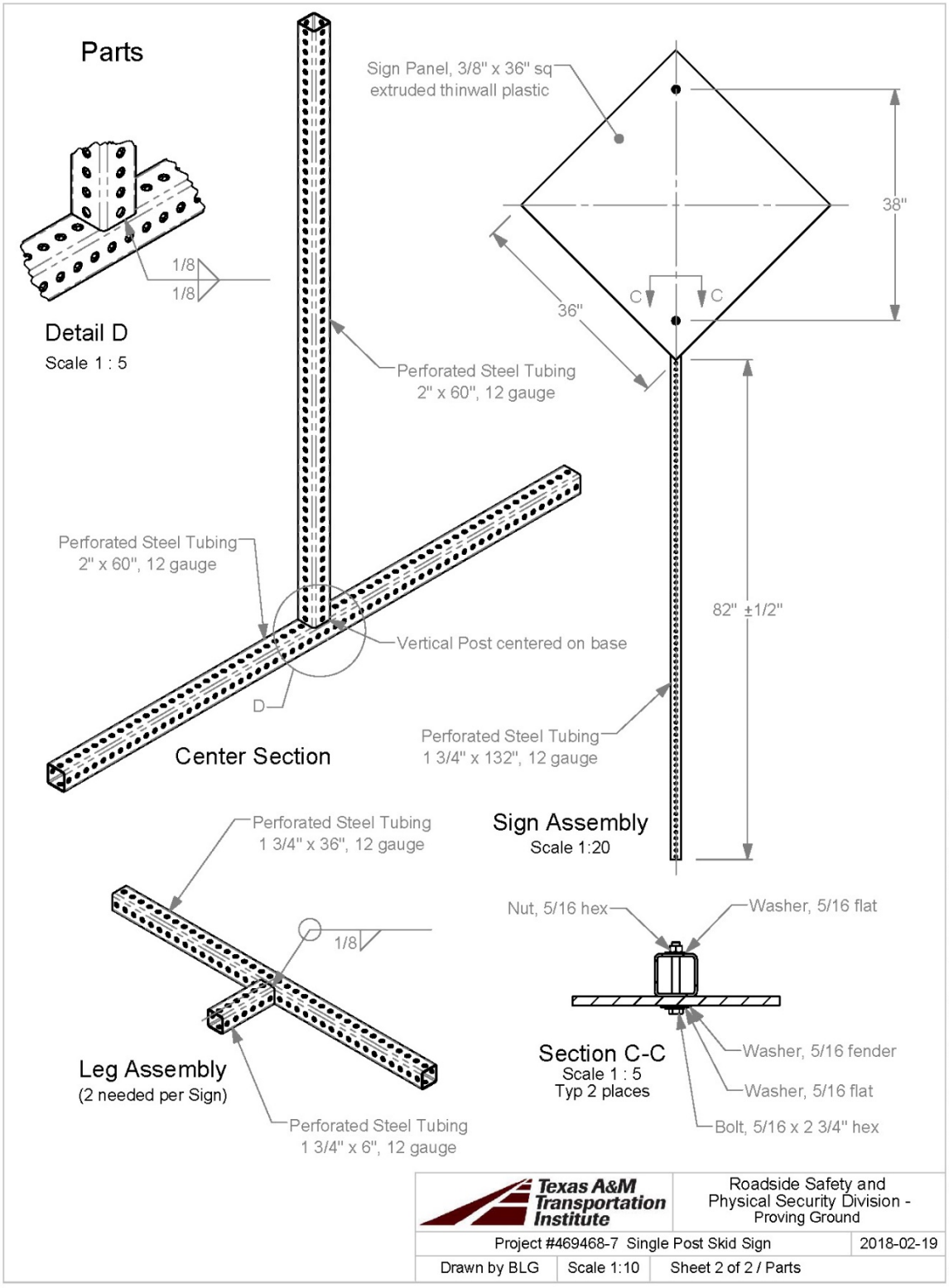

Figure 8.1. Overall Details of Skid-Mounted Single Perforated Steel Tube Temporary Sign Support System (Continued).

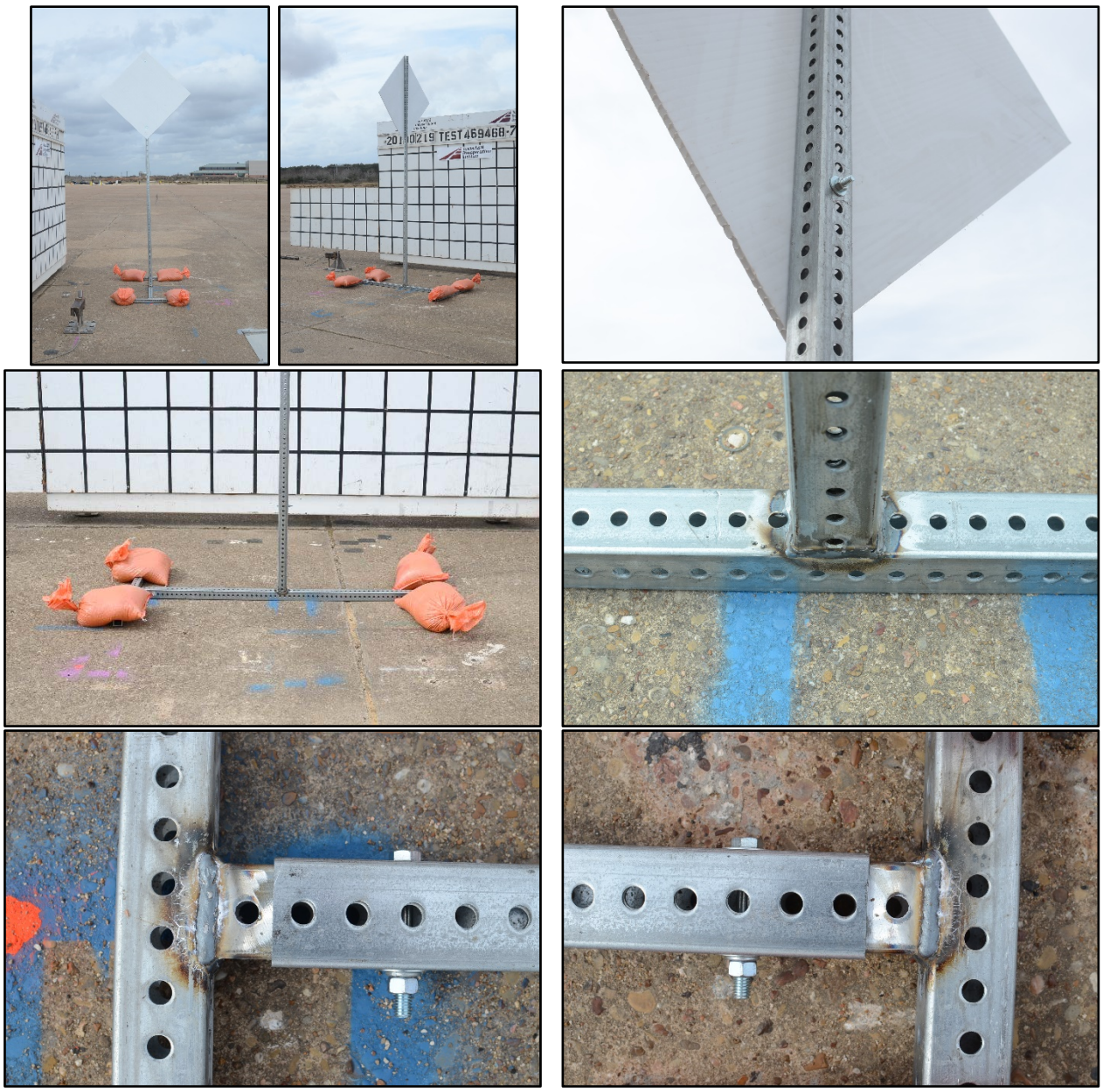

Figure 8.2. Skid-Mounted Single Perforated Steel Tube Temporary Sign Support System prior to Testing.

8.3 *MASH* TEST 3-72 AT 0° (CRASH TEST NO. 469468-7-1)

8.3.1 Test Designation and Actual Impact Conditions

MASH Test 3-72 involves a 2270P vehicle weighing 5000 lb ±110 lb impacting the traffic control device at an impact speed of 62 mi/h ±2.5 mi/h and an angle of 0° ±1.5°. The target impact point for *MASH* Test 3-72 on the skid-mounted single perforated steel tube temporary sign support system was the left quarter point of the vehicle aligned with the centerline of the traffic control device.

The 2012 Dodge RAM 1500 pickup truck used in the test weighed 5034 lb, and the actual impact speed and angle were 62.7 mi/h and 0°, respectively. The actual impact point was the left quarter point of the vehicle aligned with the centerline of the traffic control device. Target kinetic energy (KE) was 594 kip-ft, and actual KE was 662 kip-ft.

8.3.2 Weather Conditions

The test was performed on the afternoon of February 19, 2018. Weather conditions at the time of testing were as follows: wind speed: 16 mi/h; wind direction: 186° (vehicle was traveling in a northerly direction); temperature: 78°F; relative humidity: 75 percent.

8.3.3 Test Vehicle

Figures 8.3 and 8.4 show the 2012 Dodge RAM 1500 pickup truck used for the crash test. The vehicle's test inertia weight was 5034 lb, and its gross static weight was 5034 lb. The height to the lower edge of the vehicle bumper was 9.5 inches, and the height to the upper edge of the bumper was 27.0 inches. The height to the vehicle's center of gravity was 28.5 inches. Tables G.1 and G.2 in Appendix G.1.1 give additional dimensions and information on the vehicle. The vehicle was directed into the installation using a cable reverse tow and guidance system, and was released to be freewheeling and unrestrained just prior to impact.



Figure 8.3. Skid-Mounted Single Perforated Steel Tube Temporary Sign Support System/Test Vehicle Geometrics for Test No. 468469-7-1.

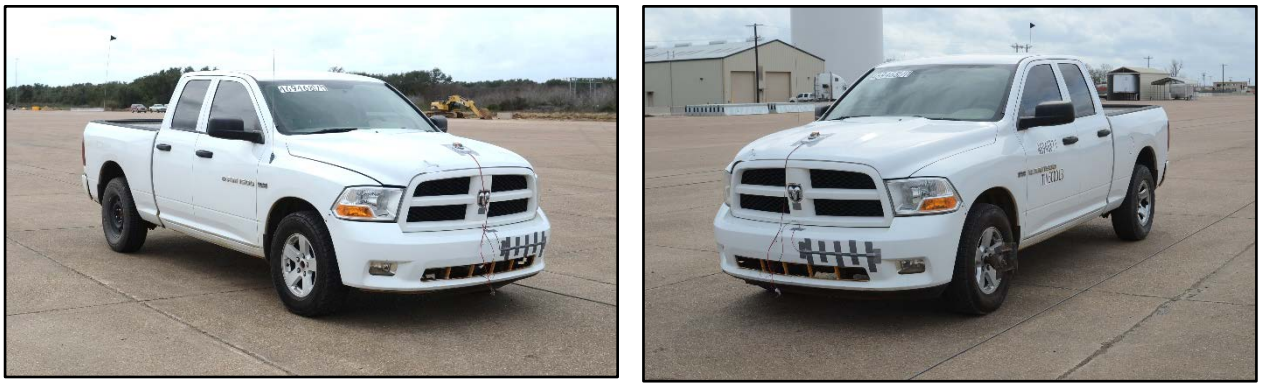

Figure 8.4. Test Vehicle before Test No. 468469-7-1.

8.3.4 Test Description

The test vehicle impacted the skid-mounted single perforated steel tube temporary sign support system with the left quarter point of the vehicle aligned with the centerline of the device at a speed of 62.7 mi/h and an angle of 0°. Table 8.1 lists events that occurred during Test No. 469468-7-1. Figure G.1 in Appendix G.1.2 presents sequential photographs during the test.

Table 8.1. Events during Test No. 469468-7-1.

TIME (s)	EVENT
0.000	Left front quarter point of vehicle contacts support
0.023	Vehicle loses contact with the device; vehicle traveling at 62.4 mi/h
0.088	Sign panel begins to impact windshield
0.098	Sign panel fully engaged and slightly deflecting windshield
0.126	Sign panel begins to rebound off windshield
0.225	Vehicle clears sand bags

8.3.5 Damage to Test Installation

Figure 8.5 shows the damage to the skid-mounted single perforated steel tube temporary sign support system. The vertical sleeve broke away from the skid at the welds, and the skid assembly was resting 5 ft downstream of the impact location. The sign panel remained attached to the upright support and sleeve and came to rest 377 ft downstream from the impact location. Two sandbags remained intact, and two were damaged. Sand was scattered in the impact area.

8.3.6 Damage to Test Vehicle

Figure 8.6 shows the damage sustained by the vehicle. A very small depression in the left side of the bumper and hood were observed. The windshield was cracked at the upper left corner over an area measuring 12 inches × 14 inches, and the edge of the roof just above this location was slightly dented and scraped over an area measuring 7 inches × 8 inches. The windshield also had a slight indentation (that was so slight as to be unmeasurable) 18 inches to the left of centerline. No hole or tear was observed in the windshield. Maximum exterior crush to the vehicle was so slight as to be unmeasurable. No occupant compartment deformation or intrusion was observed. Figure 7.7 shows the interior of the vehicle. Tables G.3 and G.4 in Appendix G.1.1 provide exterior crush and occupant compartment measurements.

8.3.7 Occupant Risk Factors

MASH does not require instrumentation of the test vehicle when the weight of the traffic control device is less than 220 lb. The skid-mounted single perforated steel tube temporary sign support system weighed 63 lb. Therefore, occupant risk factors were not measured for this test. Figure 8.8 summarizes other pertinent information from the test.

8.3.8 Assessment of Test Results

Table 8.2 provides an assessment of the test based on the applicable safety evaluation criteria for *MASH* Test 3-72. Table 8.2 shows the skid-mounted single perforated steel tube temporary sign support system met all applicable criteria for *MASH* Test 3-72 at 0°.

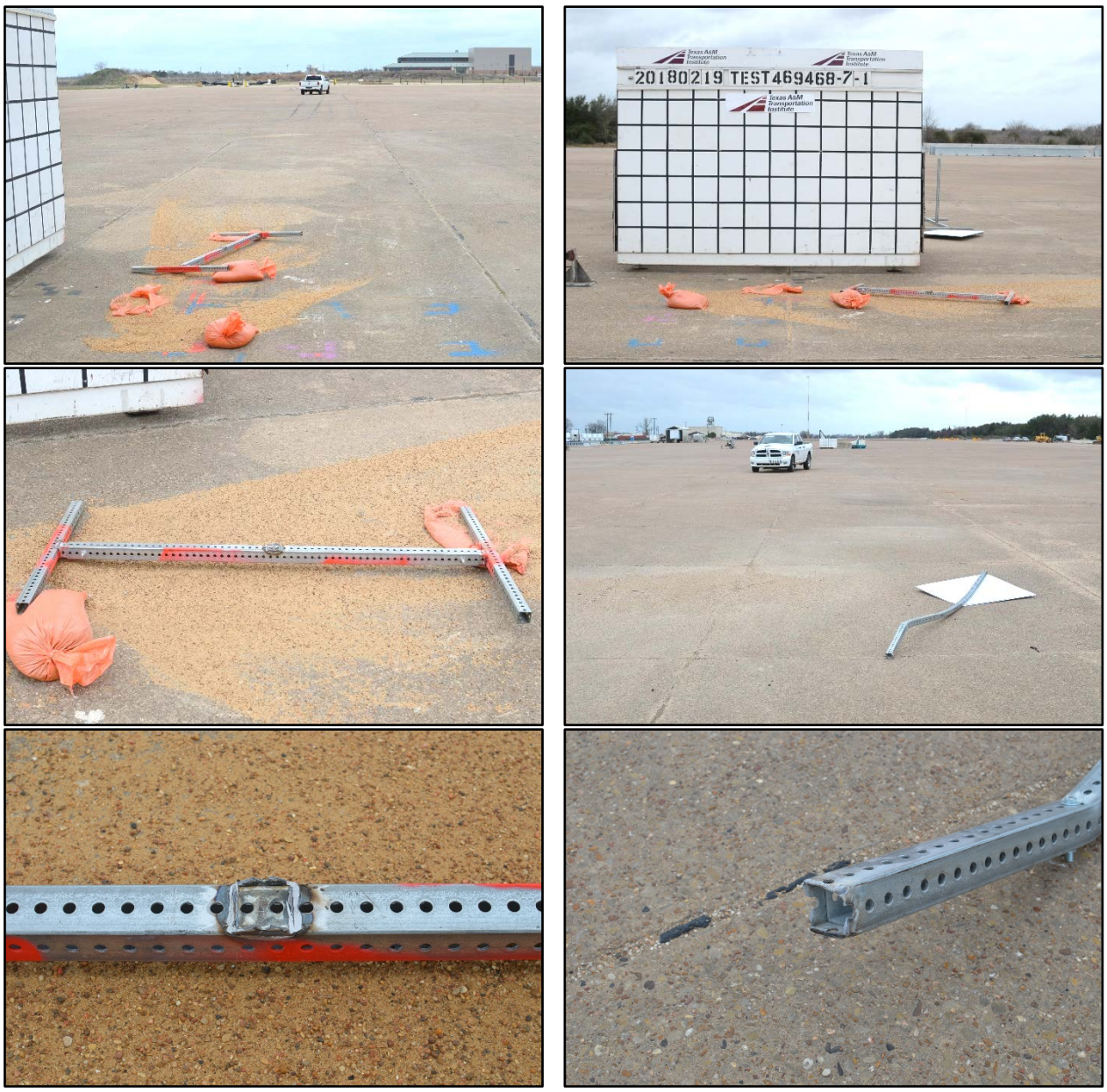

Figure 8.5. Skid-Mounted Single Perforated Steel Tube Temporary Sign Support System after Test No. 469468-7-1.



Figure 8.6. Test Vehicle after Test No. 469468-7-1.



Before Test | After Test

Figure 8.7. Interior of Test Vehicle for Test No. 469468-7-1.



0.000 s



0.025 s



0.100 s



0.200 s

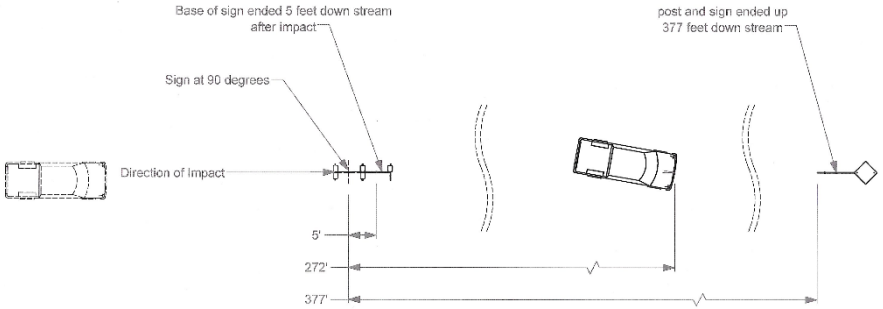

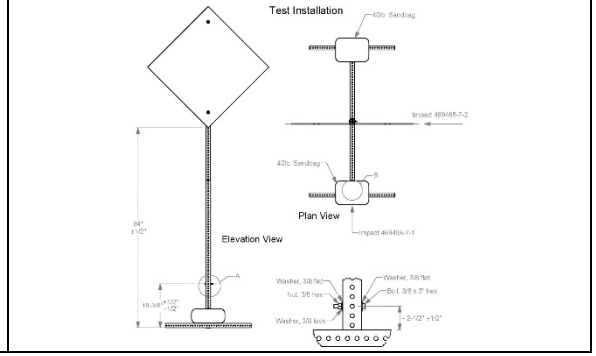

General Information
- Test Agency ..... Texas A&M Transportation Institute (TTI)
- Test Standard Test No. ..... *MASH* Test 3-72 at 0°
- TTI Test No. 469468-7-1
- Test Date 2018-02-19

Test Article
- Type ..... Work Zone Traffic Control Device
- Name ..... Skid-mounted single perforated steel tube temporary sign support system
- Installation Height ..... 84 inches from ground to bottom of sign.
- Material or Key Elements ... 36-inch square hollow core plastic sign panel secured to 1¾-inch square perforated tubing inserted into a sleeve made from 2-inch square perforated steel tubing attached to an I-shaped skid
- **Soil Type and Condition** ..... Placed on concrete surface, dry

Test Vehicle
- Type/Designation 2270P
- Make and Model ..... 2012 Dodge RAM 1500
- Curb ..... 4870 lb
- Test Inertial ..... 5034 lb
- Dummy ..... No dummy
- Gross Static ..... 5034 lb

Impact Conditions
- Speed ..... 62.7 mi/h
- Angle ..... 0°
- Location/Orientation ..... Left quarter point

Kinetic Energy ..... 662 kip-ft

Exit Conditions
- Speed ..... 62.4 mi/h
- Angle ..... 0°

Post-Impact Trajectory
- Stopping Distance ..... 272 ft downstream

Test Article Debris Scatter
- Longitudinal ..... 377 ft
- Lateral ..... 7 ft

Vehicle Damage
- VDS 12FL1
- CDC 12FLEN1
- Max. Exterior Deformation ..... Not measurable
- OCDI LF0000000
- Max. Occupant Compartment Deformation ..... None

Figure 8.8. Summary of Results for *MASH* Test 3-72 at 0° on Skid-Mounted Single Perforated Steel Tube Temporary Sign Support System.

Table 8.2. Performance Evaluation Summary for *MASH* Test 3-72 at 0° on Skid-Mounted Single Perforated Steel Tube Temporary Sign Support System.

Test Agency: Texas A&M Transportation Institute Test No.: 469468-7-1 Test Date: 2018-02-19

***MASH* Test 3-72 Evaluation Criteria**	**Test Results**	**Assessment**
Structural Adequacy		
B. The test article should readily activate in a predictable manner by breaking away, fracturing, or yielding.	The skid-mounted single perforated steel tube temporary sign support system readily fractured and released from its skid upon impact.	Pass
Occupant Risk		
D. Detached elements, fragments, or other debris from the test article should not penetrate or show potential for penetrating the occupant compartment, or present an undue hazard to other traffic, pedestrians, or personnel in a work zone.	The detached sign panel and upright support did not penetrate or show potential for penetrating the occupant compartment, or to present undue hazard to others in the area.	Pass
Deformations of, or intrusions into, the occupant compartment should not exceed limits set forth in Section 5.3 and Appendix E of MASH.	The windshield was cracked, but no holes or measurable deformation were observed. No other occupant compartment deformation was observed.	
E. Detached elements, fragments, or other debris from the test article, of vehicular damage should not block the driver's vision or otherwise cause the driver to lose control of the vehicle.	The sign panel and upright support briefly slapped the windshield, but would not block the driver's vision enough to cause loss of control of the vehicle.	Pass
F. The vehicle should remain upright during and after collision. The maximum roll and pitch angles are not to exceed 75 degrees.	The 2270P vehicle remained upright during and after the collision event.	Pass
H. Longitudinal and lateral occupant impact velocities should fall below the preferred value of 10 ft/s, or at least below the maximum allowable value of 16.4 ft/s.	*MASH* does not require vehicle instrumentation when the weight of the traffic control device is less than 220 lb. The skid-mounted single perforated steel tube temporary sign support system weighed 63 lb. Therefore, occupant risk factors were not obtained for this test.	NA
I. Longitudinal and lateral occupant ridedown accelerations should fall below the preferred value of 15.0 Gs, or at least below the maximum allowable value of 20.49 Gs.		NA
Vehicle Trajectory		
N. Vehicle trajectory behind the test article is acceptable.	The 2270P vehicle came to rest 272 ft behind device.	Pass

8.4 *MASH* TEST 3-72 AT 90° (CRASH TEST NO. 469468-7-2)

8.4.1 Test Designation and Actual Impact Conditions

MASH Test 3-72 involves a 2270P vehicle weighing 5000 lb ±110 lb impacting the traffic control device at an impact speed of 62 mi/h ±2.5 mi/h and an angle of 90° ±1.5°. The target impact point for *MASH* Test 3-72 on the skid-mounted single perforated steel tube temporary sign support system was the right quarter point of the vehicle aligned with the centerline of the traffic control device.

The 2013 RAM 1500 pickup truck used in the test weighed 5029 lb, and the actual impact speed and angle were 62.6 mi/h and 90°, respectively. The actual impact point was the right quarter point of the vehicle aligned with the centerline of the traffic control device. Target kinetic energy (KE) was 594 kip-ft, and actual KE was 659 kip-ft.

8.4.2 Weather Conditions

The test was performed on the afternoon of February 19, 2018. Weather conditions at the time of testing were as follows: wind speed: 19 mi/h; wind direction: 167° (vehicle was traveling in a northerly direction); temperature: 77°F; relative humidity: 70 percent.

8.4.3 Test Vehicle

Figures 8.9 and 8.10 show the 2013 RAM 1500 pickup truck used for the crash test. The vehicle's test inertia weight was 5029 lb, and its gross static weight was 5029 lb. The height to the lower edge of the vehicle bumper was 12.0 inches, and the height to the upper edge of the bumper was 26.5 inches. The height to the vehicle's center of gravity was 28.5 inches. Tables G.5 and G.6 in Appendix G.2.1 give additional dimensions and information on the vehicle. The vehicle was directed into the installation using a cable reverse tow and guidance system, and was released to be freewheeling and unrestrained just prior to impact.



Figure 8.9. Skid-Mounted Single Perforated Steel Tube Temporary Sign Support System/Test Vehicle Geometrics for Test No. 468469-7-2.



Figure 8.10. Test Vehicle before Test No. 468469-7-2.

8.4.4 Test Description

The test vehicle impacted the skid-mounted single perforated steel tube temporary sign support system with the right quarter point of the vehicle aligned with the centerline of the device at a speed of 62.6 mi/h and an angle of 90°. Table 8.3 lists events that occurred during Test No. 469468-7-2. Figure G.2 in Appendix G.2.1 presents sequential photographs during the test.

Table 8.3. Events during Test No. 469468-7-2.

TIME (s)	EVENT
0.000	Right front quarter point of vehicle contacts support
0.068	Corner of sign impacts with windshield
0.092	Top of post impacts windshield, and plastic sign begins to tear.
0.110	Windshield is fully deflected and is cracked from impact with sign panel
0.149	Sign and post leave windshield, sign continues to be pushed forward by vehicle
0.247	Truck clears sand bags and continues dragging sign with front bumper

8.4.5 Damage to Test Installation

Figure 8.11 shows the damage to the skid-mounted single perforated steel tube temporary sign support system. The vertical sleeve broke away from the skid at the welds, and the skid was resting 348 ft downstream and 2 ft left of the point of impact. The sign panel remained attached (by one bolt) to a 7 ft long piece of the upright support and came to rest 160 ft downstream and 5 ft left of the impact location. A 4 ft long fractured piece of upright support and vertical sleeve came to rest 150 ft downstream and 1 ft left of the impact location. Three sandbags remained intact, and one was damaged with a small amount of sand scattered in the impact area.



Figure 8.11. Skid-Mounted Single Perforated Steel Tube Temporary Sign Support System after Test No. 469468-7-2.

8.4.6 Damage to Test Vehicle

Figure 8.12 shows the damage sustained by the vehicle. A very small depression in the right side of the bumper and front of the hood was observed. The hood also had a small indentation at the right rear near the windshield over an area measuring 10 inches × 6 inches. The upper right corner of the windshield was cracked over an area measuring 18 inches × 16 inches. The maximum deformation of the windshield was 2.0 inches. No holes or tears occurred in the windshield. The windshield also had a slight indentation (that was so slight as to be unmeasurable) 18 inches to the right of centerline. The rear right side of the roof sustained scuff

marks. A 2-inch × 2-inch indentation and a small cut in the oil pan were observed. Maximum exterior crush to the vehicle was so slight as to be unmeasurable. No occupant compartment deformation or intrusion was noted other than the deformation of the windshield described above. Figure 7.13 shows the interior of the vehicle. Tables G.7 and G.8 in Appendix G.2.1 provide exterior crush and occupant compartment measurements.



Figure 8.12. Test Vehicle after Test No. 469468-7-2.



Figure 8.13. Interior of Test Vehicle after Test No. 469468-7-2.

8.4.7 Occupant Risk Factors

MASH does not require instrumentation of the test vehicle when the weight of the traffic control device is less than 220 lb. The skid-mounted single perforated steel tube temporary sign support system weighed 63 lb. Therefore, occupant risk factors were not measured for this test. Figure 8.14 summarizes other pertinent information from the test.

8.4.8 Assessment of Test Results

Table 8.4 provides an assessment of the test based on the applicable safety evaluation criteria for *MASH* Test 3-72. Table 8.4 shows the skid-mounted single perforated steel tube temporary sign support system met applicable criteria for *MASH* Test 3-72 at 90°.

8.5 CONCLUSIONS

During *MASH* Test 3-72 at 0°, the skid-mounted single perforated steel tube temporary sign support readily released from its skid upon impact. The detached sign panel and support did not penetrate or show potential for penetrating the occupant compartment, or to present undue hazard to others in the area. The windshield was cracked, but no holes or measurable deformation was observed. No other occupant compartment deformation was observed. The sign panel and support briefly slapped the windshield, but this contact would not block the driver's vision enough to cause loss of control of the vehicle. The 2270P vehicle remained upright during and after the collision event. The 2270P vehicle came to rest 272 ft behind the point of impact.

During *MASH* Test 3-72 at 90°, the skid-mounted single perforated steel tube temporary sign support yielded to the 2270P vehicle and released from its skid. The detached sign panel and upright support did not penetrate the occupant compartment. The debris did not present undue hazard to others in the area. The windshield was cracked and had a maximum deformation of 2 inches. No other occupant compartment deformation was observed. The sign panel and upright support would not block the driver's vision enough to cause loss of control of the vehicle. The 2270P vehicle remained upright during and after the collision event. The 2270P vehicle came to rest 220 ft behind device.

An assessment of the tests based on the applicable safety evaluation criteria for *MASH* Test 3-72 at 0° and 90° was provided in Tables 8.2 and 8.4, respectively. Table 8.5 shows that the skid-mounted single perforated steel tube temporary sign support system performed acceptably for *MASH* Test 3-72.



0.000 s



0.025 s



0.100 s



0.200 s

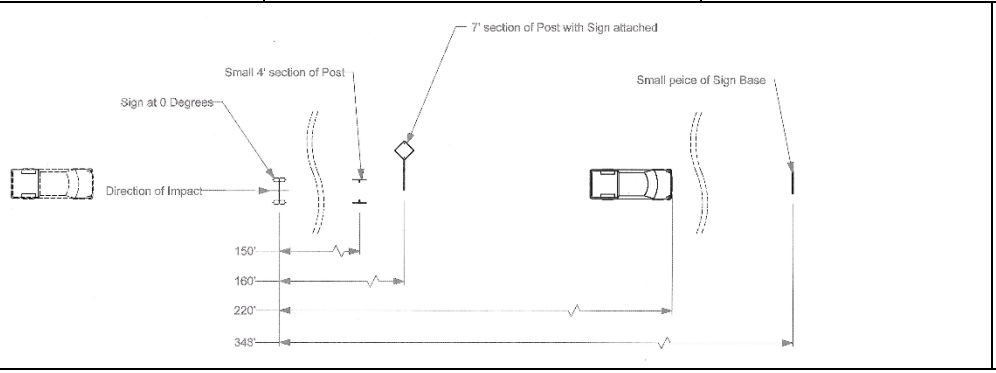

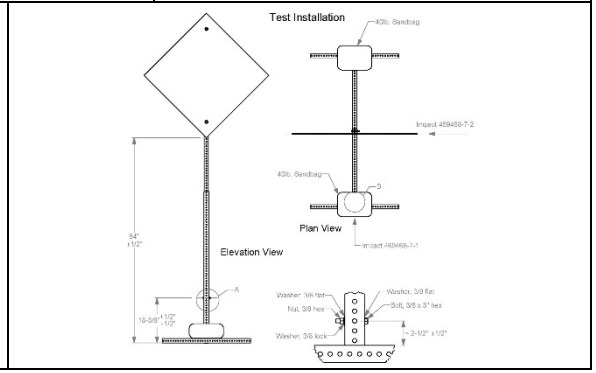

General Information
- Test Agency ..... Texas A&M Transportation Institute (TTI)
- Test Standard Test No. ..... *MASH* Test 3-72 at 90°
- TTI Test No. 469468-7-2
- Test Date 2018-02-19

Test Article
- Type ..... Work Zone Traffic Control Device
- Name ..... Skid-mounted single perforated steel tube temporary sign support system
- Installation Height ..... 84 inches from ground to bottom of sign.
- Material or Key Elements ... 36-inch square hollow core plastic sign panel secured to 1¾-inch square perforated tubing inserted into a sleeve made from 2-inch square perforated steel tubing attached to an I-shaped skid
- **Soil Type and Condition** ..... Placed on concrete surface, dry

Test Vehicle
- Type/Designation 2270P
- Make and Model ..... 2013 RAM 1500
- Curb ..... 5026 lb
- Test Inertial ..... 5029 lb
- Dummy ..... No dummy
- Gross Static ..... 5029 lb

Impact Conditions
- Speed ..... 62.6 mi/h
- Angle ..... 90°
- Location/Orientation ..... Right quarter point

Kinetic Energy ..... 659 kip-ft

Exit Conditions
- Speed ..... 60.4 mi/h
- Angle ..... 90°

Post-Impact Trajectory
- Stopping Distance ..... 220 ft downstream

Test Article Debris Scatter
- Longitudinal ..... 348 ft
- Lateral ..... 2 ft

Vehicle Damage
- VDS 12RF1
- CDC 12FREN1
- Max. Exterior Deformation ..... Not measurable
- OCDI RF0000000
- Max. Occupant Compartment Deformation ..... 2.0 inches

Figure 8.14. Summary of Results for *MASH* Test 3-72 at 90° on Skid-Mounted Single Perforated Steel Tube Temporary Sign Support System.

Table 8.4. Performance Evaluation Summary for *MASH* Test 3-72 at 90° on Skid-Mounted Single Perforated Steel Tube Temporary Sign Support System.

Test Agency: Texas A&M Transportation Institute Test No.: 469468-7-2 Test Date: 2018-02-19

***MASH* Test 3-72 Evaluation Criteria**	**Test Results**	**Assessment**
Structural Adequacy		
B. The test article should readily activate in a predictable manner by breaking away, fracturing, or yielding.	The skid-mounted single perforated steel tube temporary sign support system yielded to the 2270P vehicle and the support released from the skid.	Pass
Occupant Risk		
D. Detached elements, fragments, or other debris from the test article should not penetrate or show potential for penetrating the occupant compartment, or present an undue hazard to other traffic, pedestrians, or personnel in a work zone.	The detached sign panel and upright support did not penetrate the occupant compartment. The debris did not present undue hazard to others in the area.	Pass
Deformations of, or intrusions into, the occupant compartment should not exceed limits set forth in Section 5.3 and Appendix E of MASH.	The windshield was cracked and had a maximum deformation of 2.0 inches. No other occupant compartment deformation or intrusion was observed.	
E. Detached elements, fragments, or other debris from the test article, of vehicular damage should not block the driver's vision or otherwise cause the driver to lose control of the vehicle.	The sign panel and upright support would not block the driver's vision enough to cause loss of control of the vehicle.	Pass
F. The vehicle should remain upright during and after collision. The maximum roll and pitch angles are not to exceed 75 degrees.	The 2270P vehicle remained upright during and after the collision event.	Pass
H. Longitudinal and lateral occupant impact velocities should fall below the preferred value of 10 ft/s, or at least below the maximum allowable value of 16.4 ft/s.	*MASH* does not require vehicle instrumentation when the weight of the traffic control device is less than 220 lb. The skid-mounted single perforated steel tube temporary sign support system weighed 63 lb. Therefore, occupant risk factors were not obtained for this test.	NA
I. Longitudinal and lateral occupant ridedown accelerations should fall below the preferred value of 15.0 g, or at least below the maximum allowable value of 20.49 g.		NA
Vehicle Trajectory		
N. Vehicle trajectory behind the test article is acceptable.	The vehicle came to rest 220 ft behind the device.	Pass

Table 8.5. Performance Evaluation Summary for *MASH* Test 3-72 on Skid-Mounted Single Perforated Steel Tube Temporary Sign Support System.

Evaluation Factors	Evaluation Criteria	Crash Test No. 469468-7-1	Crash Test No. 469468-7-2
Structural Adequacy	B	S	S
Occupant Risk	D	S	S
	F	S	S
	E	S	S
	H	NA	NA
	I	NA	NA
Post Impact Trajectory	N	S	S
***MASH* Test No.**		***MASH* 3-72 (at 0°)**	***MASH* 3-72 (at 90°)**
Pass/Fail		Pass	Pass

Legend: S = Satisfactory
U = Unsatisfactory
NA = Not applicable

CHAPTER 9: MAILBOXES

9.1 BACKGROUND*

The small passenger car is considered the critical design vehicle for evaluation of mailbox support systems based on the required mailbox mounting height. As shown in Figure 9.1, the mounting height regulated for mailboxes by the United States Postal Service places mailboxes at a height that makes interaction with the windshield of the pickup truck design vehicle improbable. The taller hood height and longer wrap-around distance (i.e., the distance from the ground, around the front end, and across the hood to the base of the windshield) of the 2270P pickup truck significantly decreases the probability of windshield impact and occupant compartment intrusion. Therefore, Test 3-62 with the pickup truck was considered unnecessary for the *MASH* evaluation of the TxDOT mailbox systems.



Figure 9.1. Mailbox Geometrics with 2270P Pickup Truck (*11*).

The *MASH* test matrix for breakaway supports includes two tests with the 1100C small passenger car: a low-speed test at 19 mi/h (Test 3-60) and a high-speed test at 62 mi/h (Test 3-61). In the low speed small car test, *MASH* testing has shown that the mailbox support assembly will be pushed forward by the impacting vehicle (*12*). It is unlikely that the mailbox will separate from the support or that the support assembly will interact with the vehicle windshield during this lower impact severity test.

TTI researchers consider the most critical test for evaluation of mailbox systems to be *MASH* test designation 3-61, which involves the 1100C small passenger car impacting at high speed. This test evaluates both the structural adequacy of the mailbox connection hardware and the interaction of the mailbox support assembly with the vehicle windshield. If the mailbox remains attached during this high-speed test, it is not expected to detach in the low-speed test.

* The opinions/interpretations identified/expressed in Section 9.1 are outside the scope of TTI Proving Ground's A2LA Accreditation.

Four different mailbox support systems were selected for *MASH* testing and evaluation during Phase II of the project. The details of these systems and the results of the crash testing are provided below.

9.2 SINGLE MAILBOX WITH RECYCLED RUBBER SUPPORT POST IN TYPE 4 FOUNDATION

9.2.1 System Details

An *Elite* No. 1-A (Model #E1600B00) standard arched-top medium size mailbox from Solar Group, Inc., a division of Gibraltar Industries, was attached to the top of a recycled rubber support post at a height of 42 inches above grade. The mailbox, which weighed 7 lb, had approximate dimensions of 11 inches tall × 8¾ inches wide × 21½ inches deep. Attachment of the *Elite* mailbox to the post was accomplished using a mailbox bracket (DHT #161443), two extension brackets (DHT #148938), and associated SAE grade 5 bolts, nuts, and washers. The mailbox with the attachment brackets and hardware weighed 10 lb.

The recycled rubber support post was inserted into a Type 4 foundation socket (DHT #160891) and secured with a tapered semi-circular HDTP wedge (DHT #160892) on the impact side. The foundation socket was installed flush with the surface of a 12-inch diameter × 30-inch deep unreinforced concrete foundation. The concrete was specified as TxDOT Class B having a minimum 28-day unconfined compressive strength of 2000 psi.

Figure 9.2 presents overall information on the single mailbox with recycled rubber support in Type 4 foundation, and Figure 9.3 provides photographs of the installation. Appendix H.1.1 provides further details. Appendix H.1.2 provides material certification documents.

9.2.2 *MASH* Test 3-61 (Crash Test No. 469468-8-1)

9.2.2.1 Test Designation and Actual Impact Conditions

MASH Test 3-61 involves an 1100C vehicle weighing 2420 lb ±55 lb impacting the mailbox support at an impact speed of 62 mi/h ±2.5 mi/h and an angle of 0° ±1.5°. The target impact point for *MASH* Test 3-61 was the right quarter point of the vehicle aligned with the centerline of the mailbox support.

The 2011 Kia Rio[*] used in the test weighed 2433 lb, and the actual impact speed and angle were 63.8 mi/h and 0°, respectively. The actual impact point was the right quarter point of the vehicle aligned with the centerline of the mailbox support. Target KE was 288 kip-ft, and actual KE was 331 kip-ft.

9.2.2.2 Weather Conditions

The test was performed on the afternoon of April 4, 2018. Weather conditions at the time of testing were as follows: wind speed: 13 mi/h; wind direction: 30° (vehicle was traveling in a southerly direction); temperature: 66°F; relative humidity: 38 percent.

[*] The 2011 model vehicle used is older than the 6-year age noted in *MASH* and was selected based upon availability. An older model vehicle is permitted by AASHTO as long as it is otherwise *MASH* compliant. Other than the vehicle's year model, this 2011 model vehicle met the *MASH* requirements.

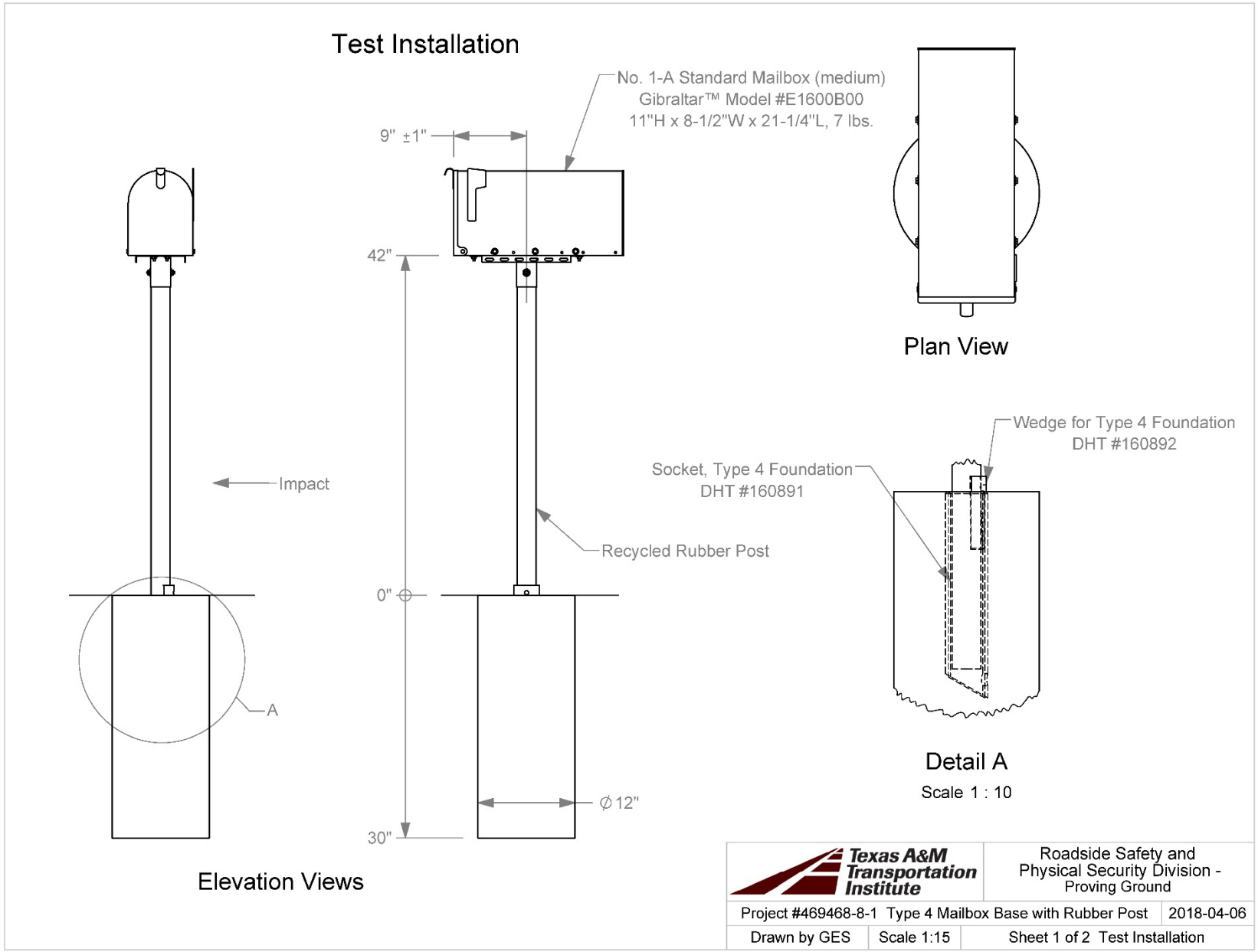

Figure 9.2. Details of Single Mailbox with Recycled Rubber Support Post in Type 4 Foundation.

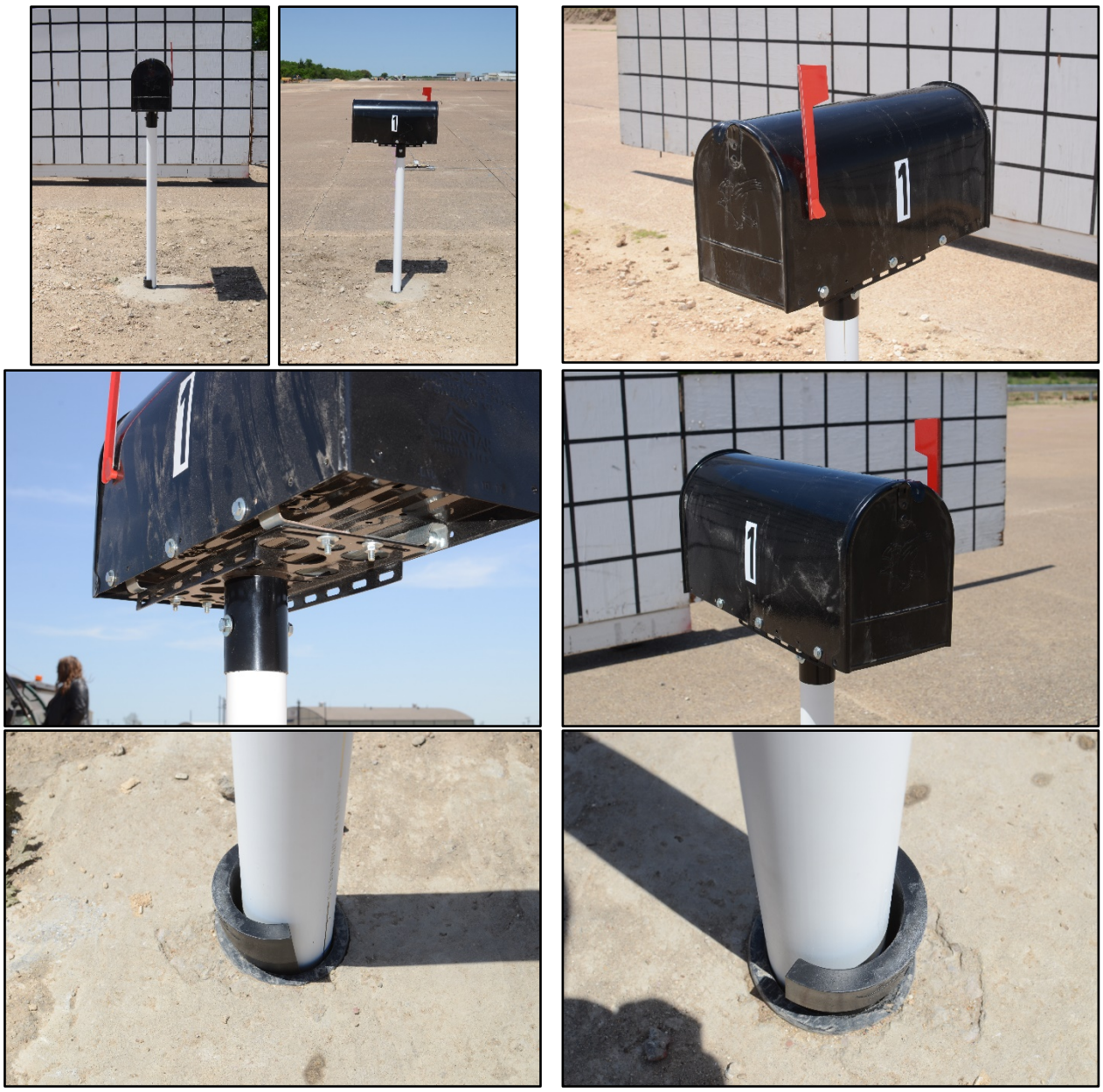

Figure 9.3. Single Mailbox with Recycled Rubber Support Post in Type 4 Foundation prior to Testing.

9.2.2.3 Test Vehicle

Figures 9.4 and 9.5 show the 2011 Kia Rio used for the crash test. The vehicle's test inertia weight was 2433 lb, and its gross static weight was 2598 lb. The height to the lower edge of the vehicle bumper was 7.75 inches, and the height to the upper edge of the bumper was 21.5 inches. Table H.1 in Appendix H.1.3 gives additional dimensions and information on the vehicle. The vehicle was directed into the installation using a cable reverse tow and guidance system, and was released to be freewheeling and unrestrained just prior to impact.



Figure 9.4. Single Mailbox with Recycled Rubber Support Post in Type 4 Foundation/Test Vehicle Geometrics for Test No. 468469-8-1.



Figure 9.5. Test Vehicle before Test No. 468469-8-1.
NOTE: Photos taken prior to insertion of Dummy.

9.2.2.4 Test Description

The test vehicle impacted the single mailbox with recycled rubber support post in Type 4 foundation with the right quarter point of the vehicle aligned with the centerline of the mailbox support at a speed of 63.8 mi/h and an angle of 0°. Table 9.1 lists events that occurred during Test No. 469468-8-1. Figure H.1 in Appendix H.1.4 presents sequential photographs during the test.

Table 9.1. Events during Test No. 469468-8-1.

TIME (s)	EVENT
0.000	Right front quarter point of vehicle contacts mailbox support
0.010	Mailbox mounting plate partially detached from mailbox
0.023	Support completely out of foundation socket
0.035	Mailbox imparts maximum deformation of car hood
0.051	Mailbox rebounding off of hood
0.071	Vehicle loses contact with support while traveling at 63.5 mi/h

Brakes on the vehicle were applied 2.3 s after impact, and the vehicle came to rest 366 ft downstream from the point of impact and along centerline of the impact path.

9.2.2.5 Damage to Test Installation

Figure 9.6 shows damage to the mailbox system. The mailbox remained attached to the support post, and the assembly came to rest 239 ft downstream from the point of impact and 15 ft to the right of centerline of the vehicle path. The lid detached from the mailbox and was came to rest 71 ft downstream from the point of impact and 12 ft to the right of centerline of the vehicle path. The wedge remained in the socket.



Figure 9.6. Single Mailbox with Recycled Rubber Support Post in Type 4 Foundation after Test No. 469468-8-1.

9.2.2.6 Damage to Test Vehicle

Figure 9.7 shows the damage sustained by the vehicle. Very small depressions in the right side of the bumper and hood were observed. The windshield had a 1-inch × 1-inch starburst crack in the right lower corner near the hood, but no hole or tear was observed. Maximum exterior crush to the vehicle was so slight as to be unmeasurable. No occupant compartment deformation or intrusion was observed. Figure 9.8 shows the interior of the vehicle. Tables H.2 and H.3 in Appendix H.1.3 provide exterior crush and occupant compartment measurements.



Figure 9.7. Test Vehicle after Test No. 469468-8-1.



Before Test | After Test

Figure 9.8. Interior of Test Vehicle for Test No. 469468-8-1.

9.2.2.7 Occupant Risk Factors

Data from the accelerometer, located at the vehicle center of gravity, were digitized for evaluation of occupant risk, and results are shown in Table 9.2. Figure 9.9 summarizes these data and other pertinent information from the test. Figure H.2 in Appendix H.1.5 shows the vehicle angular displacements, and Figures H.3 through H.8 in Appendix H.1.6 show acceleration versus time traces.

Table 9.2. Occupant Risk Factors for Test No. 469468-8-1.

Occupant Risk Factor	Value	Time
Impact Velocity		
Longitudinal	**No contact**	
Lateral	**No contact**	
Ridedown Accelerations		
Longitudinal	**NA**	
Lateral	**NA**	
THIV	**No contact**	
PHD	**NA**	
ASI	**0.05**	0.0130–0.630 s
Maximum 50-ms Moving Average		
Longitudinal	**−0.5 g**	0.0000–0.0500 s
Lateral	**0.3 g**	0.2972–0.3472 s
Vertical	**0.4 g**	0.0269–0.0769 s
Maximum Roll, Pitch, and Yaw Angles		
Yaw	**1°**	0.2413 s
Pitch	**2°**	0.1289 s
Roll	**6°**	0.1405 s

9.2.2.8 Assessment of Test Results

The recycled rubber support post deformed around the front of the vehicle and pulled out of the ground socket. The released mailbox system was carried forward by the vehicle. The system subsequently rode up and over the vehicle. There was a minor crack in the windshield. No occupant compartment deformation was observed.

Table 9.3 provides an assessment of the test based on the applicable safety evaluation criteria for *MASH* Test 3-61. Table 9.3 shows the single mailbox with recycled rubber support in Type 4 foundation met all applicable criteria for *MASH* Test 3-61.



0.000 s



0.050 s



0.100 s



0.125 s

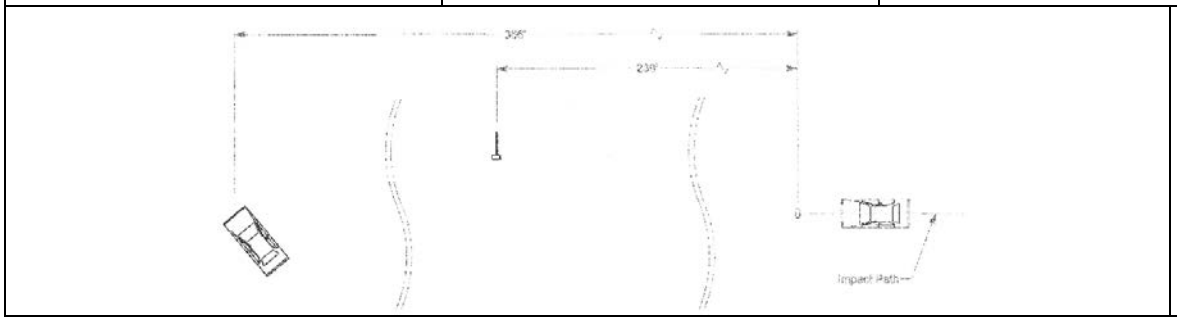

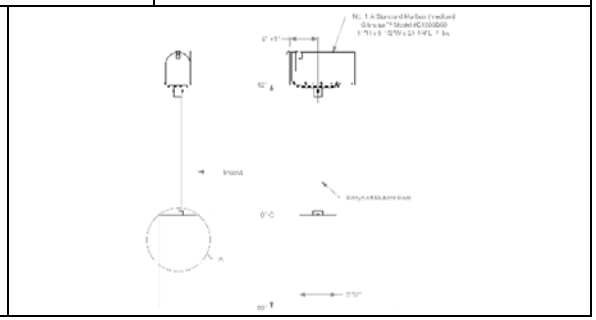

General Information
- Test Agency ..... Texas A&M Transportation Institute (TTI)
- Test Standard Test No..... *MASH* Test 3-61
- TTI Test No. 469468-8-1
- Test Date..... 2018-04-04

Test Article
- Type ..... Support Structure
- Name ..... Single Mailbox with Recycled Rubber Support Post in Type 4 Foundation
- Installation Height..... 42 inches above grade
- Material or Key Elements.... single recycled rubber post w/ medium mailbox inserted into socket in concrete footer and secured with tapered wedge
- **Soil Type and Condition**..... 12-in × 30-in deep concrete footer in crushed limestone, dry

Test Vehicle
- Type/Designation..... 1100C
- Make and Model..... 2011 Kia Rio
- Curb ..... 2466 lb
- Test Inertial..... 2433 lb
- Dummy..... 165 lb
- Gross Static..... 2598 lb

Impact Conditions
- Speed ..... 63.8 mi/h
- Angle..... 0°
- Location/Orientation ..... Right quarter point

Impact Severity..... 331 kip-ft

Exit Conditions
- Speed ..... 63.5 mi/h
- Angle..... 0°

Occupant Risk Values
- Longitudinal OIV..... No Contact
- Lateral OIV..... No Contact
- Longitudinal Ridedown ..... NA
- Lateral Ridedown ..... NA
- THIV..... NA
- PHD ..... NA
- ASI..... 0.05 g

Max. 0.050-s Average
- Longitudinal ..... -0.5 g
- Lateral..... 0.3 g
- Vertical..... 0.4 g

Post-Impact Trajectory
- Stopping Distance..... 366 ft downstream

Vehicle Stability
- Maximum Yaw Angle ..... 1°
- Maximum Pitch Angle ..... 2°
- Maximum Roll Angle..... 6°

Test Article Debris Scatter
- Longitudinal ..... 239 ft
- Lateral ..... 15 ft

Vehicle Damage
- VDS..... 12FR1
- CDC..... 12FREN1
- Max. Exterior Deformation ..... Not measurable
- OCDI RF0000000
- Max. Occupant Compartment Deformation..... None

Figure 9.9. Summary of Results for *MASH* Test 3-61 on Single Mailbox with Recycled Rubber Support Post in Type 4 Foundation.

Table 9.3. Performance Evaluation Summary for *MASH* Test 3-61 on Single Mailbox with Recycled Rubber Support Post in Type 4 Foundation.

Test Agency: Texas A&M Transportation Institute Test No.: 469468-8-1 Test Date: 2018-04-04

***MASH* Test 3-61 Evaluation Criteria**	**Test Results**	**Assessment**
Structural Adequacy		
B. The test article should readily activate in a predictable manner by breaking away, fracturing, or yielding.	The single mailbox with recycled rubber support post in Type 4 foundation readily pulled out of the socket upon impact by the 1100C vehicle.	Pass
Occupant Risk		
D. Detached elements, fragments, or other debris from the test article should not penetrate or show potential for penetrating the occupant compartment, or present an undue hazard to other traffic, pedestrians, or personnel in a work zone.	The mailbox and support post did not penetrate or show potential for penetrating the occupant compartment, or to present undue hazard to others in the area.	Pass
Deformations of, or intrusions into, the occupant compartment should not exceed limits set forth in Section 5.3 and Appendix E of MASH.	The windshield was cracked, but no measurable deformation, tear, or hole was observed. No other occupant compartment deformation was observed.	
F. The vehicle should remain upright during and after collision. The maximum roll and pitch angles are not to exceed 75 degrees.	The 1100C vehicle remained upright during and after the collision event.	Pass
H. Longitudinal and lateral occupant impact velocities should fall below the preferred value of 10 ft/s, or at least below the maximum allowable value of 16.4 ft/s.	No contact in longitudinal or lateral directions.	Pass
I. Longitudinal and lateral occupant ridedown accelerations should fall below the preferred value of 15.0 Gs, or at least below the maximum allowable value of 20.49 Gs.	No contact in longitudinal or lateral directions.	Pass
Vehicle Trajectory		
N. Vehicle trajectory behind the test article is acceptable.	The 1100C vehicle came to rest 366 ft behind the original location of the test article.	Pass

9.3 DOUBLE MAILBOX WITH THIN-WALL GALVANIZED SUPPORT POST IN TYPE 4 FOUNDATION

9.3.1 System Details

Two *Elite* No. 1-A (Model #E1600B00) standard arched-top medium size mailboxes from Solar Group, Inc., a division of Gibraltar Industries, were attached to the top of a galvanized, thin-wall steel support post at a height of 42 inches above grade. The mailboxes, which weighed 7 lb, had approximate dimensions of 11 inches tall × 8¾ inches wide × 21½ inches deep. A mailbox bracket (DHT #161443) and extension bracket (DHT #148938) was attached to the bottom of each mailbox using SAE grade 5 bolts, nuts, and washers. Attachment of the *Elite* mailboxes to the post was accomplished using a bracket (DHT #162323) that consisted of a horizontal steel plate and tubular socket. The mailboxes were bolted to the horizontal plate at a center-to-center spacing of 10 inches. The bracket socket was then placed over the end of the support post and secured using a ⅜-inch diameter × 3½-inch long SAE grade 5 hex bolt, flat and lock washers, and nut.

The galvanized steel support post (DHT #143426) was fabricated from 2-inch nominal 16 gauge (2⅜ inches outside diameter × 0.109-inch wall thickness) thin wall ASTM A513 Type 5 DOM steel tubing. The support post, which had a length of 57 inches and weighed 7.5 lb, was inserted into a Type 4 foundation socket (DHT #160891) and secured with a tapered semi-circular HDTP wedge (DHT #160892) on the impact side. The foundation socket was installed flush with the surface of a 12-inch diameter × 30-inch deep unreinforced concrete foundation. The concrete was specified as TxDOT Class B having a minimum 28-day unconfined compressive strength of 2000 psi. The total mass of the two mailboxes, connection hardware, and support post assembly was 31 lb.

Figure 9.10 presents overall information on the double mailbox with thin-wall galvanized support post in Type 4 foundation, and Figure 9.11 provides photographs of the installation. Appendix H.2.1 provides further details. Appendix H.1.2 contains material certification documents.

9.3.2 *MASH* Test 3-61 (Crash Test No. 469468-8-2)

9.3.2.1 Test Designation and Actual Impact Conditions

MASH Test 3-61 involves an 1100C vehicle weighing 2420 lb ±55 lb impacting the support of the mailboxes at an impact speed of 62 mi/h ±2.5 mi/h and an angle of 0° ±1.5°. The target impact point for *MASH* Test 3-61 on the double mailbox was the right quarter point of the vehicle aligned with the centerline of the mailbox support.

The 2011 Kia Rio* used in the test weighed 2440 lb, and the actual impact speed and angle were 63.3 mi/h and 0°, respectively. The actual impact point was the right quarter point of the vehicle aligned with the centerline of the mailbox support. Target KE was 288 kip-ft, and actual KE was 327 kip-ft.

* The 2011 model vehicle used is older than the 6-year age noted in *MASH* and was selected based upon availability. An older model vehicle is permitted by AASHTO as long as it is otherwise *MASH* compliant. Other than the vehicle's year model, this 2011 model vehicle met the *MASH* requirements.

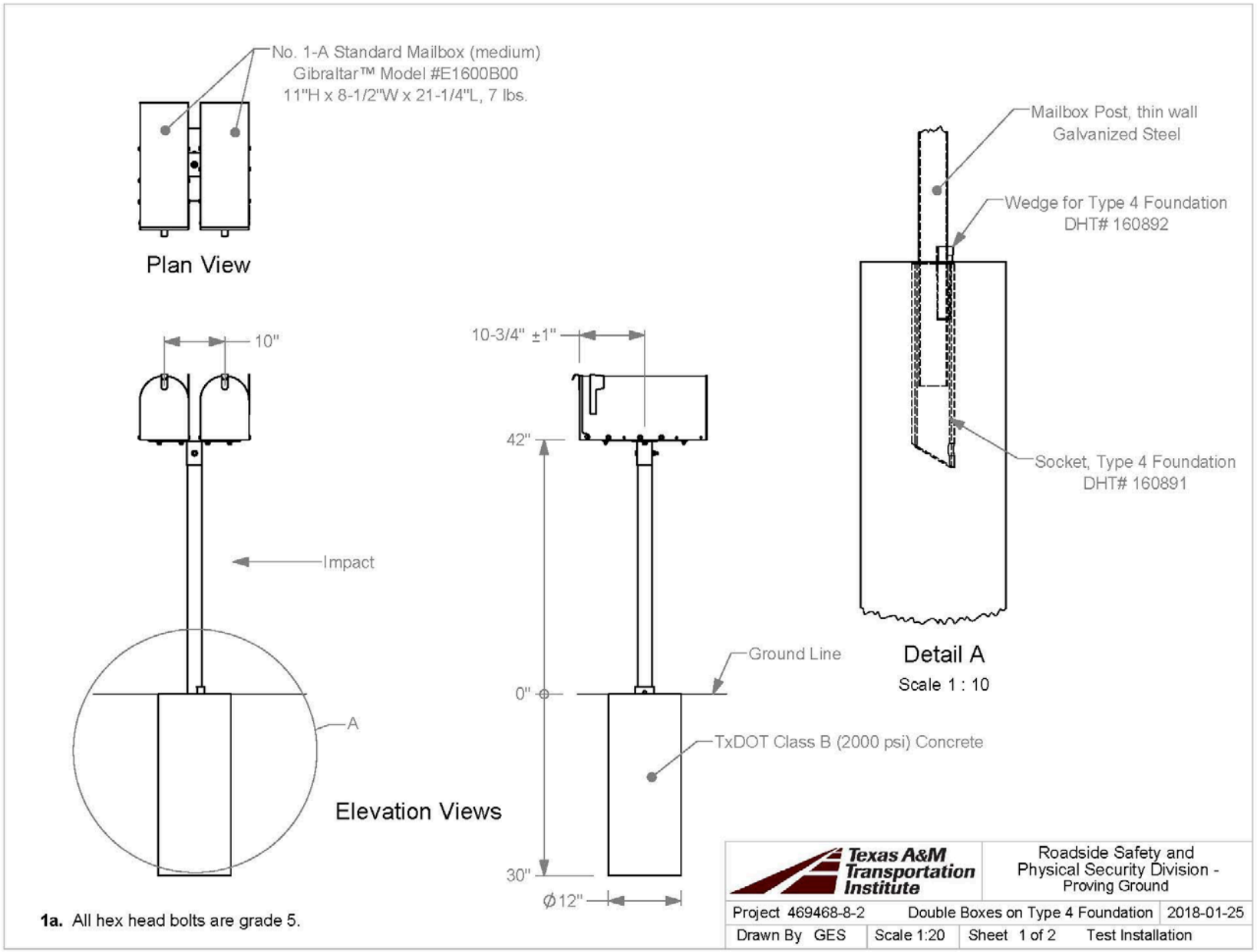

Figure 9.10. Details of Double Mailbox with Thin-Wall Galvanized Support Post in Type 4 Foundation.



Figure 9.11. Double Mailbox with Thin-Wall Galvanized Support Post in Type 4 Foundation prior to Testing.

9.3.2.2 Weather Conditions

The test was performed on the morning of April 3, 2018. Weather conditions at the time of testing were as follows: wind speed: 16 mi/h; wind direction: 184° (vehicle was traveling in a southerly direction); temperature: 77°F; relative humidity: 80 percent.

9.3.2.3 Test Vehicle

Figures 9.12 and 9.13 show the 2011 Kia Rio used for the crash test. The vehicle's test inertia weight was 2440 lb, and its gross static weight was 2605 lb. The height to the lower edge of the vehicle bumper was 7.75 inches, and the height to the upper edge of the bumper was 21.5 inches. Table H.4 in Appendix H.2.2 gives additional dimensions and information on the vehicle. The vehicle was directed into the installation using a cable reverse tow and guidance system, and was released to be freewheeling and unrestrained just prior to impact.



Figure 9.12. Double Mailbox with Thin-Wall Galvanized Support Post in Type 4 Foundation/Test Vehicle Geometrics for Test No. 468469-8-2.



Figure 9.13. Test Vehicle before Test No. 468469-8-1.
NOTE: Photos taken prior to insertion of dummy.

9.3.2.4 Test Description

The test vehicle impacted the double mailbox with thin-wall galvanized support post in Type 4 foundation with the right quarter point of the vehicle aligned with the centerline of the mailbox support at a speed of 63.3 mi/h an angle of 0°. Table 9.4 lists events that occurred during Test No. 469468-8-2. Figure H.9 in Appendix H.2.3 presents sequential photographs during the test.

Table 9.4. Events during Test No. 469468-8-2.

TIME (s)	EVENT
0.000	Right front quarter point of vehicle contacts mailbox support
0.021	Mailbox corner makes contact with hood
0.022	Post completely out of foundation socket
0.047	Mailbox and support post completely deformed around front bumper
0.048	Mailbox and hood deformed. Support post wrapped around bumper. Vehicle traveling at 62.8 mi/h.
0.064	Mailbox loses contact with hood, post still deformed around bumper

Brakes on the vehicle were applied 1.4 s after impact, and the vehicle came to rest 306 ft downstream of the point of impact and along the centerline of the impact path.

9.3.2.5 Damage to Test Installation

Figure 9.14 shows damage to the mailbox system. The support with the mailboxes attached came to rest 120 ft downstream from impact. The wedge remained near the test site. The lid detached from one of the mailboxes and came to rest 34 ft downstream from the point of impact.



Figure 9.14. Double Mailbox with Thin-Wall Galvanized Support in Type 4 Foundation after Test No. 469468-8-2.

9.3.2.6 Damage to Test Vehicle

Figure 9.15 shows the damage sustained by the vehicle. A very small depression in the right side of the bumper and hood were observed. There was a 0.5-inch diameter hole in the hood just right of centerline. No contact with the windshield was observed. Maximum exterior crush to the vehicle was so slight as to be unmeasurable. No occupant compartment deformation or intrusion was observed. Figure 9.16 shows the interior of the vehicle. Tables H.5 and H.6 in Appendix H.2.2 provide exterior crush and occupant compartment measurements.



Figure 9.15. Test Vehicle after Test No. 469468-8-2.



Before Test After Test

Figure 9.16. Interior of Test Vehicle for Test No. 469468-8-1.

9.3.2.7 Occupant Risk Factors

Data from the accelerometer, located at the vehicle center of gravity, were digitized for evaluation of occupant risk, and the results are shown in Table 9.5. Figure 9.17 summarizes these data and other pertinent information from the test. Figure H.10 in Appendix H.2.4 shows the vehicle angular displacements, and Figures H.11 through H.16 in Appendix H.2.5 show acceleration versus time traces.

Table 9.5. Occupant Risk Factors for Test No. 469468-8-2.

Occupant Risk Factor	Value	Time
Impact Velocity		
Longitudinal	**2.6 ft/s**	at 0.8501 s on front of interior
Lateral	**0.7 ft/s**	
Ridedown Accelerations		
Longitudinal	**0.5 g**	0.8501–0.8601 s
Lateral	**0.7 g**	0.8578–0.8678 s
THIV	**2.7 km/h** **0.8 m/s**	at 0.8488 s on front of interior
PHD	**0.8 g**	0.8578–0.8678 s
ASI	**0.13**	0.0110–0.0610 s
Maximum 50-ms Moving Average		
Longitudinal	**−1.3 g**	0.0009–0.0509 s
Lateral	**−0.4 g**	0.0191–0.0691 s
Vertical	**1.1 g**	0.0242–0.0742 s
Maximum Roll, Pitch, and Yaw Angles		
Yaw	**2°**	0. 3275 s
Pitch	**5°**	0.3343 s
Roll	**4°**	0. 3717 s

9.3.2.8 Assessment of Test Results

The thin-wall galvanized support pipe yielded to the vehicle, deformed about the front end, and pulled out of its socket. The support and mailboxes were carried forward by the vehicle and remained attached as a system. No windshield contact was observed.

Table 9.6 provides an assessment of the test based on the applicable safety evaluation criteria for *MASH* Test 3-61. Table 9.6 shows the double mailboxes with thin-wall galvanized support in Type 4 foundation met all applicable criteria for *MASH* Test 3-61.


0.000 s


0.050 s


0.100 s


0.150 s

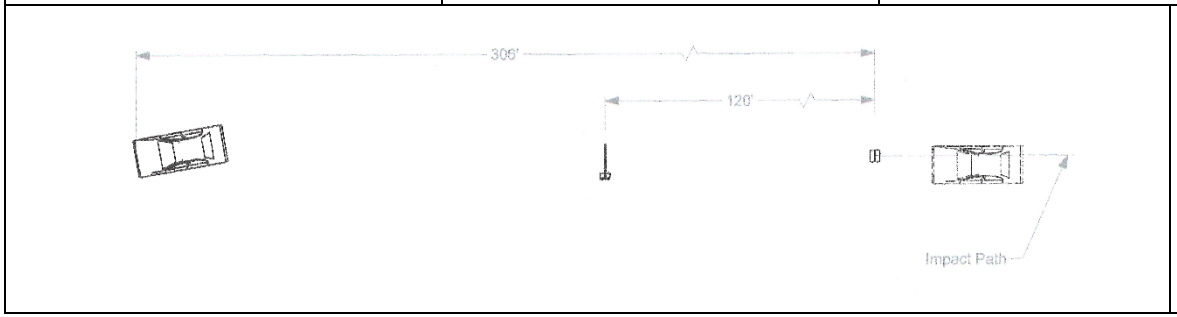

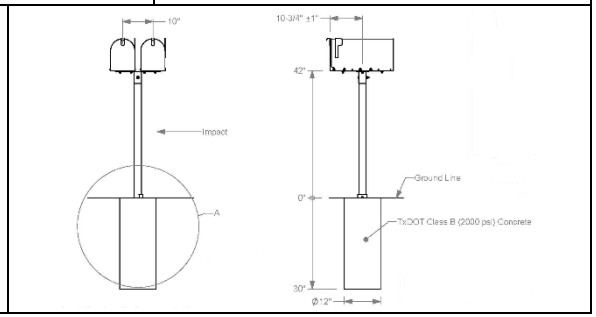

General Information
- Test Agency ..... Texas A&M Transportation Institute (TTI)
- Test Standard Test No. ..... *MASH* Test 3-61
- TTI Test No. 469468-8-2
- Test Date 2018-04-03

Test Article
- Type ..... Support Structure
- Name ..... Two Mailboxes with 2-inch Steel Support in Type 4 Foundation
- Installation Height ..... 42 inches above grade
- Material or Key Elements ... Two medium mailboxes mounted on a single 2-inch thin wall steel post secured in socket with tapered wedge. System weighed 31 lb with hardware

Soil Type and Condition ..... Concrete footer in crushed limestone, dry

Test Vehicle
- Type/Designation 1100C
- Make and Model ..... 2011 Kia Rio
- Curb ..... 2455 lb
- Test Inertial ..... 2440 lb
- Dummy ..... 165 lb
- Gross Static ..... 2605 lb

Impact Conditions
- Speed ..... 63.3 mi/h
- Angle ..... 0°
- Location/Orientation ..... Right quarter point

Impact Severity ..... 327 kip-ft

Exit Conditions
- Speed ..... 62.8 mi/h
- Angle ..... 0°

Occupant Risk Values
- Longitudinal OIV ..... 2.6 ft/s
- Lateral OIV ..... 0.7 ft/s
- Longitudinal Ridedown ..... 0.5 g
- Lateral Ridedown ..... 0.7 g
- THIV ..... 2.7 km/h
- PHD ..... 0.8 g
- ASI 0.13

Max. 0.050-s Average
- Longitudinal ..... -1.3 g
- Lateral ..... -0.4 g
- Vertical ..... 1.1 g

Post-Impact Trajectory
- Stopping Distance ..... 306 ft downstream

Vehicle Stability
- Maximum Yaw Angle ..... 2°
- Maximum Pitch Angle ..... 5°
- Maximum Roll Angle ..... 4°

Test Article Debris Scatter
- Longitudinal ..... 120 ft
- Lateral ..... 0 ft

Vehicle Damage
- VDS 12FR1
- CDC 12FREN1
- Max. Exterior Deformation ..... Not measurable
- OCDI RF0000000
- Max. Occupant Compartment Deformation ..... None

Figure 9.17. Summary of Results for *MASH* Test 3-61 on Double Mailbox with Thin-Wall Galvanized Support in Type 4 Foundation.

Table 9.6. Performance Evaluation Summary for *MASH* Test 3-61 on Double Mailbox with Thin-Wall Galvanized Support in Type 4 Foundation.

Test Agency: Texas A&M Transportation Institute Test No.: 469468-8-2 Test Date: 2018-04-03

***MASH* Test 3-61 Evaluation Criteria**	**Test Results**	**Assessment**
Structural Adequacy		
B. The test article should readily activate in a predictable manner by breaking away, fracturing, or yielding.	The double mailbox with thin-wall galvanized support pipe in Type 4 foundation deformed along the front of the vehicle and pulled out of the socket.	Pass
Occupant Risk		
D. Detached elements, fragments, or other debris from the test article should not penetrate or show potential for penetrating the occupant compartment, or present an undue hazard to other traffic, pedestrians, or personnel in a work zone.	The mailbox and support did not penetrate or show potential for penetrating the occupant compartment, or to present undue hazard to others in the area.	Pass
Deformations of, or intrusions into, the occupant compartment should not exceed limits set forth in Section 5.3 and Appendix E of MASH.	No measurable deformation was observed. No other occupant compartment deformation was observed.	
F. The vehicle should remain upright during and after collision. The maximum roll and pitch angles are not to exceed 75 degrees.	The 1100C vehicle remained upright during and after the collision event.	Pass
H. Longitudinal and lateral occupant impact velocities should fall below the preferred value of 10 ft/s, or at least below the maximum allowable value of 16.4 ft/s.	Longitudinal OIV was 2.6 ft/s, and lateral OIV was 0.7 ft/s.	Pass
I. Longitudinal and lateral occupant ridedown accelerations should fall below the preferred value of 15.0 Gs, or at least below the maximum allowable value of 20.49 Gs.	Maximum longitudinal occupant ridedown acceleration was 0.5 g, and maximum lateral occupant ridedown acceleration was 0.7 g.	Pass
Vehicle Trajectory		
N. Vehicle trajectory behind the test article is acceptable.	The 1100C vehicle came to rest 306 ft behind the original location of the test article.	Pass

9.4 MULTIPLE MAILBOXES WITH MULTI-MOUNT SUPPORT IN TYPE 4 FOUNDATION

9.4.1 Background*

This system consisted of four mailboxes attached to a powder-coated, thin-wall steel support fabricated in a semi-circular shape and secured inside a socket using a tapered semi-circular HDTP wedge. TxDOT standard MB-15(1) does not permit the use of large mailboxes on the outside positions of the multiple mailbox mount. The system was tested using two medium and two large standard mailboxes, which was more critical in terms of weight than four small or medium mailboxes.

9.4.2 System Details

The mailbox configuration evaluated in this test consisted of four mailboxes (two large and two medium) mounted at a height of 42 inches above grade to a semi-circular multiple-mount support post that was installed in a socket embedded in a concrete footing. Two large *Stanley* No. 2 mailboxes (Model #ST200B00) from Solar Group, Inc., a division of Gibraltar Industries, were attached at the two inside positions of the four mounting positions on the support post. The large *Stanley* mailboxes were approximately 15 inches tall × 11½ inches wide × 24¾ inches deep and weighed 11 lb.

Two medium *Elite* No. 1-A mailboxes (Model #E1600B00) from Solar Group, Inc., a division of Gibraltar Industries, were attached at the two outside mounting positions on the multiple-mount support. The medium *Elite* mailboxes were approximately 11 inches tall × 8¾ inches wide × 21½ inches deep and weighed 7 lb.

Attachment of each mailbox to the horizontal segment of the multiple-mount support post was accomplished using a mailbox bracket with a vertical steel tube sleeve (DHT #161443), two extension brackets (DHT #148938), and associated SAE grade 5 bolts, nuts, and washers.

The four mailboxes were supported with a TxDOT multiple-mount post (DHT #164116) fabricated from 2-inch nominal, 16 gauge (2.375-inch outside diameter × 0.065-inch wall thickness) thin wall ASTM A513 Type 5 DOM steel tubing. The support post incorporated a vertical section that inserted into a foundation sleeve with two small plates that controlled the embedment depth into the socket, a U-shaped section centered above the vertical section, and a horizontal section near the top. The ends of the semi-circular section of the support extended above the horizontal member to provide the outer connection points for mailbox attachment. There were two additional short vertical pipe sections attached to the interior of the horizontal member to provide two additional interior mailbox attachment points.

The leg of the multiple-mount support post was inserted approximately 12 inches into a Type 4 foundation socket (DHT #160891) and secured with a tapered HDPE wedge (DHT #160892) on the field side of the mailbox. The socket was embedded flush to the top of a non-reinforced concrete foundation that measured approximately 12 inches in diameter × 30 inches

* The opinions/interpretations identified/expressed in Section 9.4.1 are outside the scope of TTI Proving Ground's A2LA Accreditation.

deep. The concrete was specified as TxDOT Class B having a minimum 28-day unconfined compressive strength of 2000 psi.

The total mass of the four mailboxes, connection hardware, and support post assembly was 70 lb. Figure 9.18 presents overall information on the multiple mailbox mount in Type 4 foundation, and Figure 9.19 provides photographs of the installation. Appendix H.3.1 provides further details. Appendix H.1.2 contains material certification documents.

9.4.3 *MASH* Test 3-61 (Crash Test No. 469468-8-3)

9.4.3.1 Test Designation and Actual Impact Conditions

MASH Test 3-61 involves an 1100C vehicle weighing 2420 lb ±55 lb impacting the support of the mailboxes at an impact speed of 62 mi/h ±2.5 mi/h and an angle of 0° ±1.5°. The target impact point for *MASH* Test 3-61 on the multiple mailboxes was the right quarter point of the vehicle aligned with the centerline of the mailbox support.

The 2011 Kia Rio* used in the test weighed 2440 lb, and the actual impact speed and angle were 65.7 mi/h and 0°, respectively. The actual impact point was the right quarter point of the vehicle aligned with the centerline of the mailbox support. Target KE was 288 kip-ft, and actual KE was 352 kip-ft.

9.4.3.2 Weather Conditions

The test was performed on the afternoon of April 3, 2018. Weather conditions at the time of testing were as follows: wind speed: 9 mi/h; wind direction: 202° (vehicle was traveling in a southerly direction); temperature: 81°F; relative humidity: 72 percent.

9.4.3.3 Test Vehicle

Figures 9.20 and 9.21 show the 2011 Kia Rio used for the crash test. The vehicle's test inertia weight was 2440 lb, and its gross static weight was 2605 lb. The height to the lower edge of the vehicle bumper was 7.75 inches, and the height to the upper edge of the bumper was 21.5 inches. Table H.7 in Appendix H.3.2 gives additional dimensions and information on the vehicle. The vehicle was directed into the installation using a cable reverse tow and guidance system, and was released to be freewheeling and unrestrained just prior to impact.

9.4.3.4 Test Description

The test vehicle impacted the multiple mailbox mount in Type 4 foundation with the right quarter point of the vehicle aligned with the centerline of the mailbox support at a speed of 65.7 mi/h and an angle of 0°. Table 9.7 lists events that occurred during Test No. 469468-8-3. Figure H.17 in Appendix H.3.3 presents sequential photographs during the test.

* The 2011 model vehicle used is older than the 6-year age noted in *MASH* and was selected based upon availability. An older model vehicle is permitted by AASHTO as long as it is otherwise *MASH* compliant. Other than the vehicle's year model, this 2011 model vehicle met the *MASH* requirements.

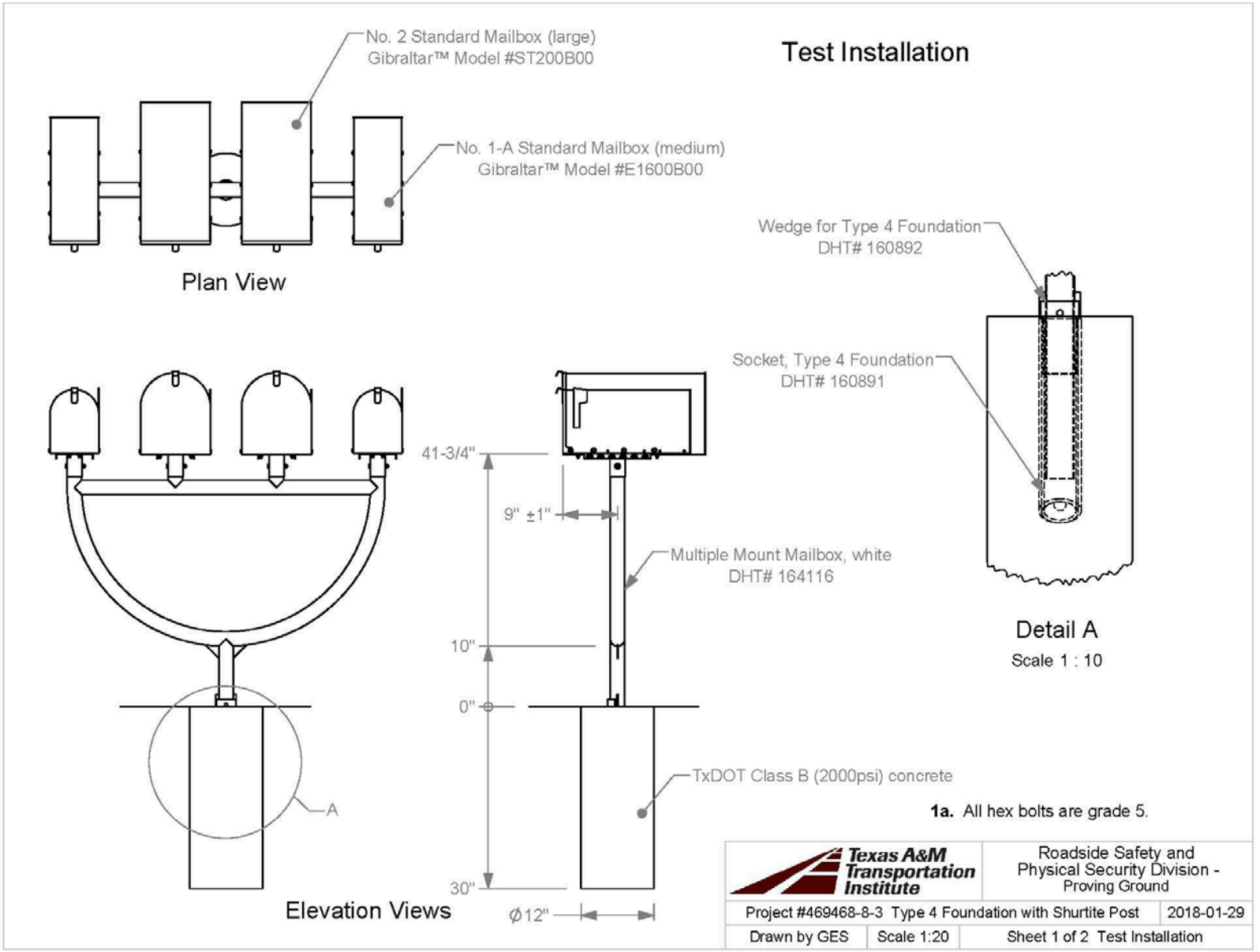

Figure 9.18. Details of Multiple Mailboxes with Multi-Mount Support in Type 4 Foundation.



Figure 9.19. Multiple Mailboxes with Multi-Mount Support in Type 4 Foundation prior to Testing.



Figure 9.20. Multiple Mailboxes with Multi-Mount Support in Type 4 Foundation/Test Vehicle Geometrics for Test No. 468469-8-3.



Figure 9.21. Test Vehicle before Test No. 468469-8-3.
NOTE: Photos taken prior to insertion of dummy.

Table 9.7. Events during Test No. 469468-8-3.

TIME (s)	EVENT
0.000	Right front quarter point of vehicle contacts mailbox support
0.033	Post completely out of foundation socket
0.046	Mailbox corner makes contact with windshield
0.047	Windshield begins to crack from impact with mailbox
0.143	Mailbox no longer touching windshield and post not touching car
0.144	Car loses contact with the mailboxes and support while traveling at 63.8 mi/h

Brakes on the vehicle were applied 1.2 s after impact, and the vehicle came to rest 302 ft downstream of the point of impact and 10 ft to the left of centerline of the impact path.

9.4.3.5 Damage to Test Installation

Figure 9.22 shows damage to the mailbox system. The support with the mailboxes attached came to rest 160 ft downstream from impact and 10 ft to the right of centerline. The lid and rear of the mailbox on the impact side detached. The wedge remained near the impact location.



Figure 9.22. Multiple Mailboxes with Multi-Hanger Support in Type 4 Foundation after Test No. 469468-8-3.

9.4.3.6 Damage to Test Vehicle

Figure 9.23 shows the damage sustained by the vehicle. A very small depression in the right side of the bumper was observed, and the lower radiator support was deformed. The right side of the hood was deformed over an area measuring approximately 24 inches × 35 inches and 3 inches deep. The windshield was cracked in the right lower quadrant near the hood over an area 34 inches × 24 inches and 1.8 inches deep. No hole or tear was observed in the windshield. Maximum exterior crush to the front bumper of the vehicle was so slight as to be unmeasurable. Maximum occupant compartment deformation was 1.8 inches in the windshield area. Figure 9.24 shows the interior of the vehicle. Tables H.8 and H.9 in Appendix H.3.2 provide exterior crush and occupant compartment measurements.



Figure 9.23. Test Vehicle after Test No. 469468-8-1.



Before Test After Test

Figure 9.24. Interior of Test Vehicle for Test No. 469468-8-1.

9.4.3.7 Occupant Risk Factors

Data from the accelerometer, located at the vehicle center of gravity, were digitized for evaluation of occupant risk, and the results are shown in Table 9.8. Figure 9.25 summarizes these data and other pertinent information from the test. Figure H.18 in Appendix H.3.4 shows the vehicle angular displacements, and Figures H.19 through H.24 in Appendix H.3.5 show acceleration versus time traces.

Table 9.8. Occupant Risk Factors for Test No. 469468-8-3.

Occupant Risk Factor	Value	Time
Impact Velocity		
Longitudinal	**2.6 ft/s**	at 0.7280 s on front of interior
Lateral	**1.0 ft/s**	
Ridedown Accelerations		
Longitudinal	**0.2 g**	0.8488–0.8588 s
Lateral	**0.4 g**	0.9358–0.9458 s
THIV	**3.2 km/h** **0.9 m/s**	at 0.7229 s on front of interior
PHD	**0.4 g**	0.9355–0.9455 s
ASI	**0.14**	0.0128–0.0628 s
Maximum 50-ms Moving Average		
Longitudinal	**−1.6 g**	0.0016–0.0516 s
Lateral	**0.4 g**	0.0566–0.1066 s
Vertical	**1.3 g**	0.0468–0.0968 s
Maximum Roll, Pitch, and Yaw Angles		
Yaw	**2°**	0..3218 s
Pitch	**4°**	0.5126 s
Roll	**2°**	0.2147 s

9.4.3.8 Assessment of Test Results

The support deformed around the front of the vehicle and pulled out of the ground socket. The released mailbox system rotated into the windshield and subsequently up and over the vehicle. The windshield sustained deformation of 1.8 inches, below the 3-inch maximum for *MASH*, and there were no tears or holes through the windshield.

Table 9.9 provides an assessment of the test based on the applicable safety evaluation criteria for *MASH* Test 3-61. Table 9.9 shows the multiple mailboxes with multi-hanger support in Type 4 foundation met all applicable criteria for *MASH* Test 3-61.



0.000 s



0.050 s



0.100 s



0.150 s

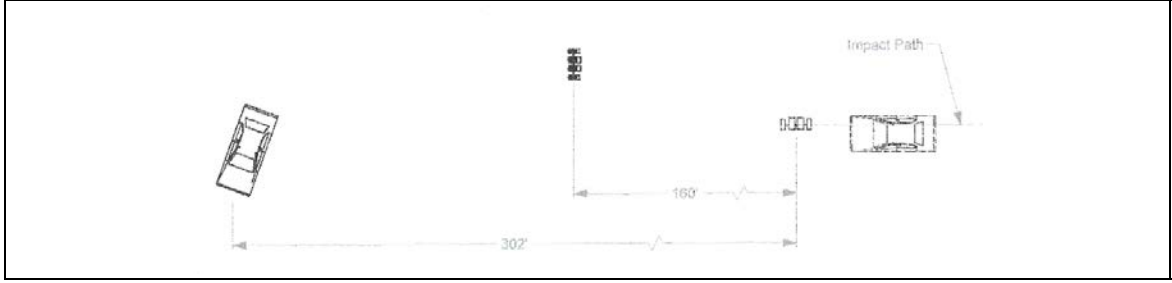

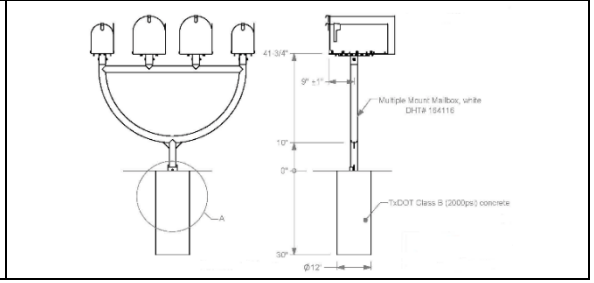

General Information
- Test Agency ..... Texas A&M Transportation Institute (TTI)
- Test Standard Test No. ..... *MASH* Test 3-61
- TTI Test No. 469468-8-3
- Test Date 2018-04-03

Test Article
- Type ..... Support Structure
- Name ..... Multi-Mount "U"-shape Mailbox Support in Type 4 Foundation
- Installation Height ..... 42 inches above grade
- Material or Key Elements ... Semi-circular multiple-mount support with 2 medium & 2 large arched-top mailboxes installed in socket and secured by wedge

Soil Type and Condition ..... 12-in × 30-in deep concrete footer in crushed limestone, dry

Test Vehicle
- Type/Designation 1100C
- Make and Model ..... 2011 Kia Rio
- Curb ..... 2455 lb
- Test Inertial ..... 2440 lb
- Dummy ..... 165 lb
- Gross Static ..... 2605 lb

Impact Conditions
- Speed ..... 65.7 mi/h
- Angle ..... 0°
- Location/Orientation ..... Right quarter point

Impact Severity ..... 352 kip-ft

Exit Conditions
- Speed ..... 63.8 mi/h
- Angle ..... 0°

Occupant Risk Values
- Longitudinal OIV ..... 2.6 ft/s
- Lateral OIV ..... 1.0 ft/s
- Longitudinal Ridedown ..... 0.2 g
- Lateral Ridedown ..... 0.4 g
- THIV ..... 3.2 km/h
- PHD ..... 0.4 g
- ASI 0.14

Max. 0.050-s Average
- Longitudinal ..... -1.6 g
- Lateral ..... 0.4 g
- Vertical ..... 1.3 g

Post-Impact Trajectory
- Stopping Distance ..... 302 ft downstream 10 ft twd left side

Vehicle Stability
- Maximum Yaw Angle ..... 2°
- Maximum Pitch Angle ..... 4°
- Maximum Roll Angle ..... 2°

Test Article Debris Scatter
- Longitudinal ..... 160 ft
- Lateral ..... 10 ft

Vehicle Damage
- VDS 12FR1
- CDC 12FREN1
- Max. Exterior Deformation ..... Not measurable
- OCDI RF0000000
- Max. Occupant Compartment Deformation ..... 1.8 inches

Figure 9.25. Summary of Results for *MASH* Test 3-61 on Multiple Mailboxes with Multi-Mount Support in Type 4 Foundation.

Table 9.9. Performance Evaluation Summary for *MASH* Test 3-61 on Multiple Mailboxes with Multi-Mount Support in Type 4 Foundation.

Test Agency: Texas A&M Transportation Institute Test No.: 469468-8-3 Test Date: 2018-04-03

MASH Test 3-61 Evaluation Criteria	Test Results	Assessment
Structural Adequacy		
B. The test article should readily activate in a predictable manner by breaking away, fracturing, or yielding.	The multiple mailboxes with 4-position multi-mount support in Type 4 foundation readily pulled out of the socket upon impact by the 1100C vehicle.	Pass
Occupant Risk		
D. Detached elements, fragments, or other debris from the test article should not penetrate or show potential for penetrating the occupant compartment, or present an undue hazard to other traffic, pedestrians, or personnel in a work zone.	The mailboxes and support did not penetrate or show potential for penetrating the occupant compartment, or to present undue hazard to others in the area.	Pass
Deformations of, or intrusions into, the occupant compartment should not exceed limits set forth in Section 5.3 and Appendix E of MASH.	The windshield was cracked, and there was 1.8 inches of deformation inward toward the occupant compartment. No tear or hole was observed. No other occupant compartment deformation was observed.	
F. The vehicle should remain upright during and after collision. The maximum roll and pitch angles are not to exceed 75 degrees.	The 1100C vehicle remained upright during and after the collision event.	Pass
H. Longitudinal and lateral occupant impact velocities should fall below the preferred value of 10 ft/s, or at least below the maximum allowable value of 16.4 ft/s.	Longitudinal OIV was 2.6 ft/s, and lateral OIV was 1.0 ft/s.	Pass
I. Longitudinal and lateral occupant ridedown accelerations should fall below the preferred value of 15.0 Gs, or at least below the maximum allowable value of 20.49 Gs.	Maximum longitudinal occupant ridedown acceleration was 0.2 g, and maximum lateral occupant ridedown acceleration was 0.4 g.	Pass
Vehicle Trajectory		
N. Vehicle trajectory behind the test article is acceptable.	The 1100C vehicle came to rest 302 ft behind and 10 ft to the left of the original impact location with the test article.	Pass

9.5 SINGLE MOLDED PLASTIC MAILMASTER® MAILBOX WITH WOOD SUPPORT IN TYPE 5 FOUNDATION

9.5.1 System Details

The mailbox configuration used for this test consisted of a two-piece molded plastic mailbox assembly mounted on a nominal 4 × 4 × 54-inch long wood post embedded 2 ft-6 inches in soil. The Step 2 Home Mailmaster® Plus plastic mailbox (Model #540200) was supplied with lag screws and wood screws, which were used to secure it to the support post at a height that placed the bottom of the integral mailbox at a height of 42 inches above grade.

Figure 9.26 presents overall information on the two-piece molded plastic Mailmaster® mailbox with wood support (Type 5 foundation), and Figure 9.27 provides photographs of the installation. Appendix H.4.1 provides further details. Appendix H.1.2 contains material certification documents.

9.5.2 *MASH* Test 3-61 (Crash Test No. 469468-8-4)

9.5.2.1 Test Designation and Actual Impact Conditions

MASH Test 3-61 involves an 1100C vehicle weighing 2420 lb ±55 lb impacting the mailbox support at an impact speed of 62 mi/h ±2.5 mi/h and an angle of 0° ±1.5°. The target impact point for *MASH* Test 3-61 on the two-piece molded plastic mailbox was the right quarter point of the vehicle aligned with the centerline of the mailbox support.

The 2011 Kia Rio* used in the test weighed 2433 lb, and the actual impact speed and angle were 62.8 mi/h and 0°, respectively. The actual impact point was the right quarter point of the vehicle aligned with the centerline of the mailbox support. Target KE was 288 kip-ft, and actual KE was 321 kip-ft.

9.5.2.2 Weather Conditions

The test was performed on the morning of April 4, 2018. Weather conditions at the time of testing were as follows: wind speed: 7 mi/h; wind direction: 52° (vehicle was traveling in a southerly direction); temperature: 58°F; relative humidity: 47 percent.

9.5.2.3 Test Vehicle

Figures 9.28 and 9.29 show the 2011 Kia Rio used for the crash test. The vehicle's test inertia weight was 2433 lb, and its gross static weight was 2598 lb. The height to the lower edge of the vehicle bumper was 7.75 inches, and the height to the upper edge of the bumper was 21.5 inches. Table H.10 in Appendix H.4.2 gives additional dimensions and information on the vehicle. The vehicle was directed into the installation using a cable reverse tow and guidance system, and was released to be freewheeling and unrestrained just prior to impact.

* The 2011 model vehicle used is older than the 6-year age noted in *MASH* and was selected based upon availability. An older model vehicle is permitted by AASHTO as long as it is otherwise *MASH* compliant. Other than the vehicle's year model, this 2011 model vehicle met the *MASH* requirements.

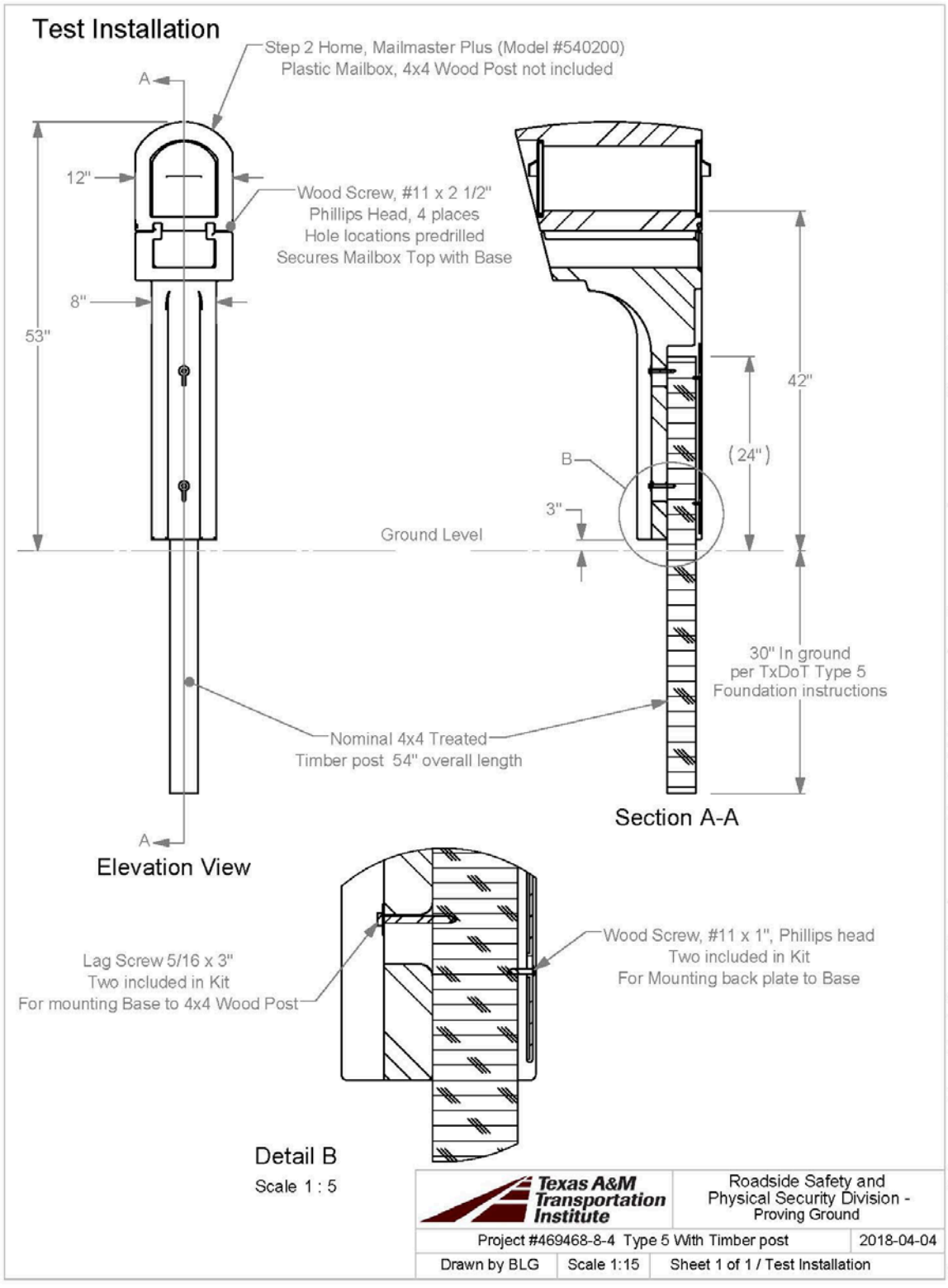

Figure 9.26. Details of Single Molded Plastic Mailmaster® Mailbox with Wood Support Post in Type 5 Foundation.



Figure 9.27. Single Molded Plastic Mailmaster® Mailbox with Wood Support Post in Type 5 Foundation prior to Testing.



Figure 9.28. Single Molded Plastic Mailmaster® Mailbox with Wood Support Post in Type 5 Foundation/Test Vehicle Geometrics for Test No. 468469-8-4.



Figure 9.29. Test Vehicle before Test No. 468469-8-4.
NOTE: Photos taken prior to insertion of dummy.

9.5.2.4 Test Description

The test vehicle impacted the molded plastic mailbox assembly with Type 5 foundation with the right quarter point of the vehicle aligned with the centerline of the mailbox support at a speed of 62.8 mi/h and an angle of 0°. Table 9.10 lists events that occurred during Test No. 469468-8-4. Figure H.25 in Appendix H.4.3 presents sequential photographs during the test.

Table 9.10. Events during Test No. 469468-8-4.

TIME (s)	EVENT
0.000	Right front quarter point of vehicle contacts mailbox support
0.008	Plastic mailbox assembly begins to rip just above wood post
0.016	Top mailbox section separates from plastic support section
0.023	Wooden support post completely fractured
0.026	Plastic mailbox support completely ripped apart
0.047	Top mailbox part impacts windshield, windshield shatters
0.051	All parts of mailbox off front of car
0.083	Vehicle loses contact with support/mailbox while traveling at 61.8 mi/h

Brakes on the vehicle were applied at 1.3 s after impact, and the vehicle came to rest 288 ft downstream from the impact point and along centerline of the impact path.

9.5.2.5 Damage to Test Installation

Figure 9.30 shows damage to the support and mailbox. The wood support post fractured slightly below ground, and the support post and mailbox fractured into several pieces. The base of the mailbox was resting 51 ft downstream from impact and 30 ft to the right of centerline of the vehicle impact path. The top of the support post came to rest 83 ft downstream from impact and 2 ft to the right of centerline. The mailbox was resting 97 ft downstream and 30 ft to the right of centerline. A fractured piece of support post and the bottom of the base of the mailbox support came to rest 159 ft downstream and along the centerline of the vehicle impact path.



Figure 9.30. Single Molded Plastic Mailmaster® Mailbox with Wood Support in Type 5 Foundation after Test No. 469468-8-4.

9.5.2.6 Damage to Test Vehicle

Figure 9.31 shows the damage sustained by the vehicle. A very small depression in the right side of the bumper and hood were observed. The hood was deformed on the right side. The windshield was cracked in the right lower quadrant near the hood over an area measuring approximately 32 inches × 27 inches and 1.9 inches deep. No hole or tear was observed in the windshield. Maximum exterior crush to the vehicle was so slight as to be unmeasurable. Maximum occupant compartment deformation was 1.9 inches in the windshield area. Figure 9.32 shows the interior of the vehicle. Tables H.11 and H.12 in Appendix H.4.2 provide exterior crush and occupant compartment measurements.



Figure 9.31. Test Vehicle after Test No. 469468-8-4.



Before Test | After Test

Figure 9.32. Interior of Test Vehicle for Test No. 469468-8-4.

9.5.2.7 Occupant Risk Factors

Data from the accelerometer, located at the vehicle center of gravity, were digitized for evaluation of occupant risk, and results are shown in Table 9.11. Figure 9.33 summarizes these data and other pertinent information from the test. Figure H.26 in Appendix H.4.4 shows the vehicle angular displacements, and Figures H.27 through H.32 in Appendix H.4.5 show acceleration versus time traces.

Table 9.11. Occupant Risk Factors for Test No. 469468-8-4.

Occupant Risk Factor	Value	Time
Impact Velocity		
Longitudinal	**1.0 ft/s**	at 0.6758 s on left side of interior
Lateral	**3.3 ft/s**	
Ridedown Accelerations		
Longitudinal	**0.2 g**	0.8288–0.8388 s
Lateral	**0.4 g**	0.8026–0.8126 s
THIV	**3.6 km/h** **1.0 m/s**	at 0.6737 s on left side of interior
PHD	**0.4 g**	0.8026–0.8126 s
ASI	**0.04**	0.0027–0.0527 s
Maximum 50-ms Moving Average		
Longitudinal	**−0.4 g**	0.0000–0.0500 s
Lateral	**0.4 g**	0.2665–0.3165 s
Vertical	**0.4 g**	0.0135–0.0635 s
Maximum Roll, Pitch, and Yaw Angles		
Yaw	**2°**	0.0819 s
Pitch	**3°**	0.8198 s
Roll	**5°**	0.8099 s

9.5.2.8 Assessment of Test Results

The 4×4 wood support post fractured slightly below grade. The molded plastic mailbox system separated and fractured into several pieces. The separated upper section of the plastic mailbox system contacted the windshield. Maximum deformation of the windshield was 1.9 inches, and there were no tears or holes through the windshield.

Table 9.12 provides an assessment of the test based on the applicable safety evaluation criteria for *MASH* Test 3-61. Table 9.12 shows the single molded plastic Mailmaster® mailbox with wood support post (Type 5 foundation) met all applicable criteria for *MASH* Test 3-61.

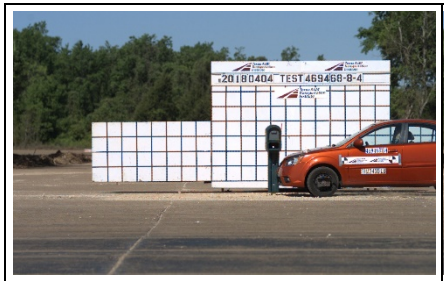

0.000 s

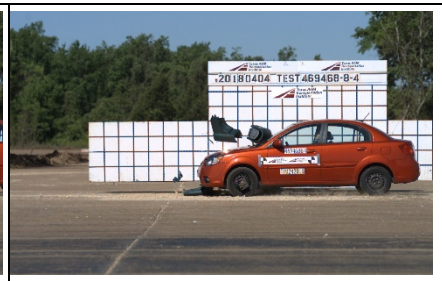

0.050 s



0.100 s



0.150 s

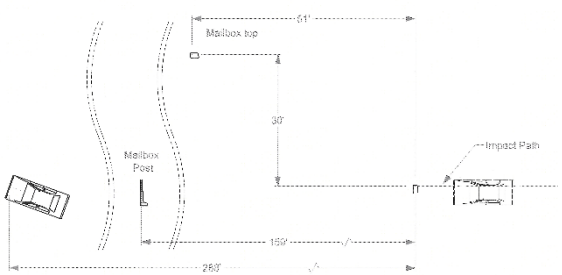

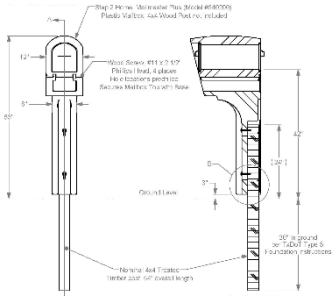

General Information
- Test Agency ..... Texas A&M Transportation Institute (TTI)
- Test Standard Test No. ..... *MASH* Test 3-61
- TTI Test No. 469468-8-4
- Test Date 2018-04-04

Test Article
- Type ..... Support Structure
- Name ..... Single Molded Plastic Mailmaster® Mailbox with Wood Support in Type 5 Foundation
- Installation Height ..... 42 inches above grade
- Material or Key Elements ... Two-piece molded mailbox mounted on a nominal 4 × 4 × 54-inch long wood post

Soil Type and Condition ..... Direct embed in crushed limestone, damp

Test Vehicle
- Type/Designation .....
- Make and Model 1100C
- Curb ..... 2011 Kia Rio
- Test Inertial ..... 2466 lb
- Dummy ..... 2433 lb
- Gross Static ..... 165 lb
  2598 lb

Impact Conditions
- Speed ..... 62.8 mi/h
- Angle ..... 0°
- Location/Orientation ..... Right quarter point

Impact Severity ..... 321 kip-ft

Exit Conditions
- Speed ..... 61.8 mi/h
- Angle ..... 0°

Occupant Risk Values
- Longitudinal OIV ..... 1.0 ft/s
- Lateral OIV ..... 3.3 ft/s
- Longitudinal Ridedown ..... 0.2 g
- Lateral Ridedown ..... 0.4 g
- THIV ..... 3.6 km/h
- PHD ..... 0.4 g
- ASI 0.04

Max. 0.050-s Average
- Longitudinal ..... -0.4 g
- Lateral ..... 0.4 g
- Vertical ..... 0.4 g

Post-Impact Trajectory
- Stopping Distance ..... 288 ft downstream

Vehicle Stability
- Maximum Yaw Angle ..... 2°
- Maximum Pitch Angle ..... 3°
- Maximum Roll Angle ..... 5°

Test Article Debris Scatter
- Longitudinal ..... 159 ft
- Lateral ..... 30 ft

Vehicle Damage
- VDS 12FR1
- CDC 12FREN1
- Max. Exterior Deformation ..... Not measurable
- OCDI RF0000000
- Max. Occupant Compartment Deformation ..... 1.9 inches

Figure 9.33. Summary of Results for *MASH* Test 3-61 on Single Molded Plastic Mastermail® Mailbox with Wood Support in Type 5 Foundation.

Table 9.12. Performance Evaluation Summary for *MASH* Test 3-61 on Single Molded Plastic Mailmaster® Mailbox with Wood Support Post in Type 4 Foundation.

Test Agency: Texas A&M Transportation Institute Test No.: 469468-8-4 Test Date: 2018-04-04

MASH Test 3-61 Evaluation Criteria	Test Results	Assessment
Structural Adequacy		
B. The test article should readily activate in a predictable manner by breaking away, fracturing, or yielding.	The wood post (Type 5 foundation) supporting the two-piece molded plastic Mailmaster® mailbox fractured slightly below ground upon impact by the 1100C vehicle.	Pass
Occupant Risk		
D. Detached elements, fragments, or other debris from the test article should not penetrate or show potential for penetrating the occupant compartment, or present an undue hazard to other traffic, pedestrians, or personnel in a work zone.	The mailbox and support did not penetrate or show potential for penetrating the occupant compartment, or to present undue hazard to others in the area.	Pass
Deformations of, or intrusions into, the occupant compartment should not exceed limits set forth in Section 5.3 and Appendix E of MASH.	The windshield was cracked, and maximum deformation was 1.9 inches. No tear or hole in the windshield was observed. No other occupant compartment deformation was observed.	
F. The vehicle should remain upright during and after collision. The maximum roll and pitch angles are not to exceed 75 degrees.	The 1100C vehicle remained upright during and after the collision event.	Pass
H. Longitudinal and lateral occupant impact velocities should fall below the preferred value of 10 ft/s, or at least below the maximum allowable value of 16.4 ft/s.	Longitudinal OIV was 1.0 ft/s, and lateral OIV was 3.3 ft/s.	Pass
I. Longitudinal and lateral occupant ridedown accelerations should fall below the preferred value of 15.0 Gs, or at least below the maximum allowable value of 20.49 Gs.	Maximum longitudinal occupant ridedown acceleration was 0.2 g, and maximum lateral occupant ridedown acceleration was 0.4 g.	Pass
Vehicle Trajectory		
N. Vehicle trajectory behind the test article is acceptable.	The 1100C vehicle came to rest 288 ft behind the original location of the test article.	Pass

9.6 CONCLUSIONS

An assessment of the four mailbox configurations based on the applicable safety evaluation criteria for *MASH* Test 3-61 was provided in Tables 9.3, 9.6, 9.9, and 9.12.

9.6.1 Single Mailbox with Recycle Rubber Support in Type 4 Foundation

The single mailbox with recycled rubber support in Type 4 foundation readily released out of the socket upon impact by the 1100C vehicle. The mailbox and support post did not penetrate or show potential for penetrating the occupant compartment, or to present undue hazard to others in the area. The windshield was cracked, but no hole, tear, or measurable deformation was observed. No other occupant compartment deformation was observed. The 1100C vehicle remained upright during and after the collision event. There was no occupant contact in the longitudinal or lateral directions. The 1100C vehicle came to rest 366 ft behind the original location of the test article.

9.6.2 Double Mailbox with Thin-Wall Galvanized Support in Type 4 Foundation

The double mailbox with thin-wall galvanized support pipe in Type 4 foundation deformed along the front of the vehicle and released out of the socket. The mailbox and support did not penetrate or show potential for penetrating the occupant compartment, or to present undue hazard to others in the area. No windshield contact or occupant compartment deformation was observed. The 1100C vehicle remained upright during and after the collision event. Occupant risk factors were within the preferred limits specified in *MASH*. The 1100C vehicle came to rest 306 ft behind the original location of the test article.

9.6.3 Multiple Mailboxes with Multi-Mount Support in Type 4 Foundation

The multiple mailboxes with multi-mount support in Type 4 foundation readily released out of the socket upon impact by the 1100C vehicle. The mailboxes and support did not penetrate or show potential for penetrating the occupant compartment, or to present undue hazard to others in the area. The windshield was cracked, and there was 1.8 inches of deformation inward toward the occupant compartment. No tear or hole was observed in the windshield. No other occupant compartment deformation was observed. The 1100C vehicle remained upright during and after the collision event. Occupant risk factors were within the preferred limits specified in *MASH*. The 1100C vehicle came to rest 302 ft behind and 10 ft to the left of the original location of the test article.

9.6.4 Single Molded Plastic Mailmaster® Mailbox with Wood Support in Type 5 Foundation

The single molded plastic Mailmaster® mailbox with wood support post in Type 5 foundation fractured slightly below ground upon impact by the 1100C vehicle. The mailbox and support did not penetrate or show potential for penetrating the occupant compartment, or to present undue hazard to others in the area. The windshield was cracked, and maximum deformation was 1.9 inches. No tear or hole was observed. Occupant risk factors were within the preferred limits specified in *MASH*. The 1100C vehicle remained upright during and after the

collision event. The 1100C vehicle came to rest 288 ft behind the original location of the test article.

9.6.5 Assessment

Table 9.13 summarizes the assessment of the mailbox configurations that were tested.

Table 9.13. Assessment Summary for Mailbox Tests.

Evaluation Factors	Evaluation Criteria	Test No. 469468-8-1 - Single Mailbox – Recycled Rubber Support	Test No. 469468-8-2 – Double Mailbox – Thin Wall Galvanized Support	Test No. 469468-8-3 – Multiple Mailboxes – Multi-Mount Support	Test No. 469468-8-4 – Single Molded Plastic Mailbox – Wood Support
Structural Adequacy	B	S	S	S	S
Occupant Risk	D	S	S	S	S
	F	S	S	S	S
	H	S	S	S	S
	I	S	S	S	S
Vehicle Trajectory	N	S	S	S	S
	Test No.	***MASH* Test 3-61**	***MASH* Test 3-61**	***MASH* Test 3-61**	***MASH* Test 3-61**
	Pass/Fail	Pass	Pass	Pass	Pass

S = Satisfactory
U = Unsatisfactory
N/A = Not Applicable

CHAPTER 10:
SKID-MOUNTED DUAL WOOD POST TEMPORARY SIGN SUPPORT SYSTEM

10.1 BACKGROUND*

The skid-mounted dual wood post temporary sign support system uses dual 4-inch × 4-inch posts and is designed for use with a maximum 21 sq. ft sign panel. Details can be found on TxDOT Barricade and Construction sheet BC(5)-14.

The *MASH* test matrix for work zone traffic control devices includes a high-speed test with a passenger car (Test 3-71) and pickup truck (Test 3-72) at both 0° and 90° impact orientations. The skid-mounted dual wood post temporary sign support system was previously tested with a small passenger car at high speed under NCHRP Report 350 (*13*). Although the small passenger car design test vehicle has changed under *MASH*, its performance in frontal impacts with large skid-mounted sign support systems is not expected to differ appreciably.

A pickup truck test was performed on the skid-mounted dual wood post temporary sign support system with 5-ft mounting height at 0° under NCHRP Report 350 (*14*). TxDOT currently specifies a 7-ft mounting height, which is considered less critical for the pickup truck impact. Although the pickup truck design test vehicle has changed under *MASH*, review of the previous pickup truck test at the lower mounting height indicates that the impact performance of the skid-mounted dual wood post temporary sign support system at 7-ft mounting height with the *MASH* 2270P pickup truck at 0° should be acceptable. Therefore, only *MASH* Test 3-72 at 90° was considered necessary to assess *MASH* compliance.

MASH states "that lightweight free-standing features cannot cause sufficient velocity change to result in failure of the test under occupant risk criteria. Therefore, Tests 3-71 and 3-72 can be conducted without the instrumentation necessary for determining occupant risk whenever the test article has a total weight of 220 lb (100 kg) or less." Consequently, the pickup truck test vehicle was not instrumented in the testing of the skid-mounted dual wood post temporary sign support system.

10.2 SYSTEM DETAILS

This test installation consisted of a 48-inch square × ⅛-inch thick aluminum sign panel secured to a nominal 4×4 wood supports with 4 bolts. The panel had rounded corners and was placed in a diamond orientation, with the lower corner at 84 inches above grade. The wood frame consisted of nominal 4×4, 2×6, and 2×4 lumber and assorted hardware. All lumber was treated southern yellow pine. All hex bolts were grade 5, and each had two USS flat washers, one lock washer, and one hex nut. Each lag screw had a USS flat washer under the head.

The installation was placed on an existing concrete apron but was not secured to it. The skid-mounted dual wood post temporary sign support system was placed with the sign panel at 90° parallel to the vehicle path. Figure 10.1 presents details on the skid-mounted dual wood post temporary sign support system, and Figure 10.2 provides photographs of the installation.

* The opinions/interpretations identified/expressed in Section 10.1 are outside the scope of TTI Proving Ground's A2LA Accreditation.

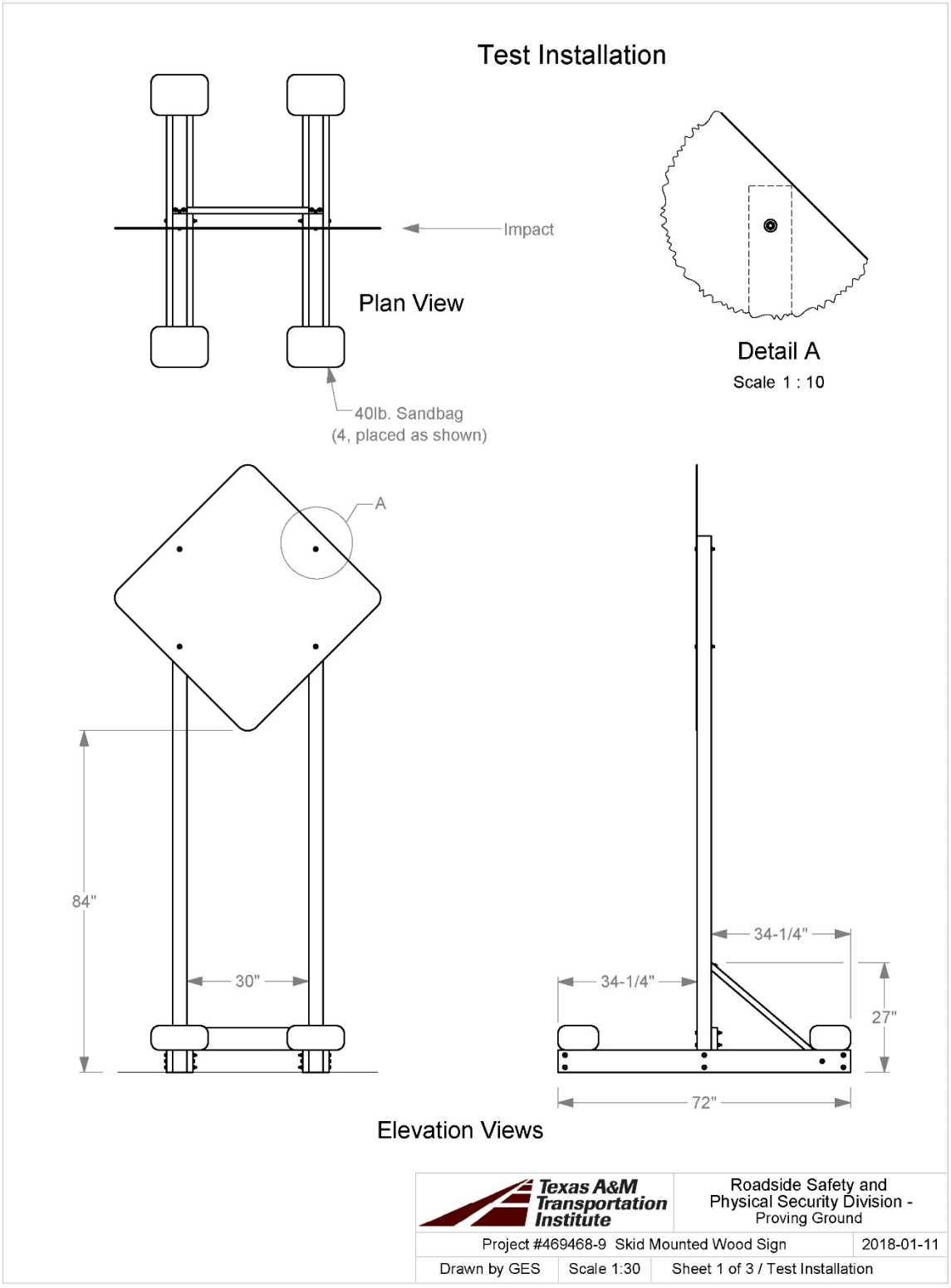

Figure 10.1. Overall Details of Skid-Mounted Dual Wood Post Temporary Sign Support System.

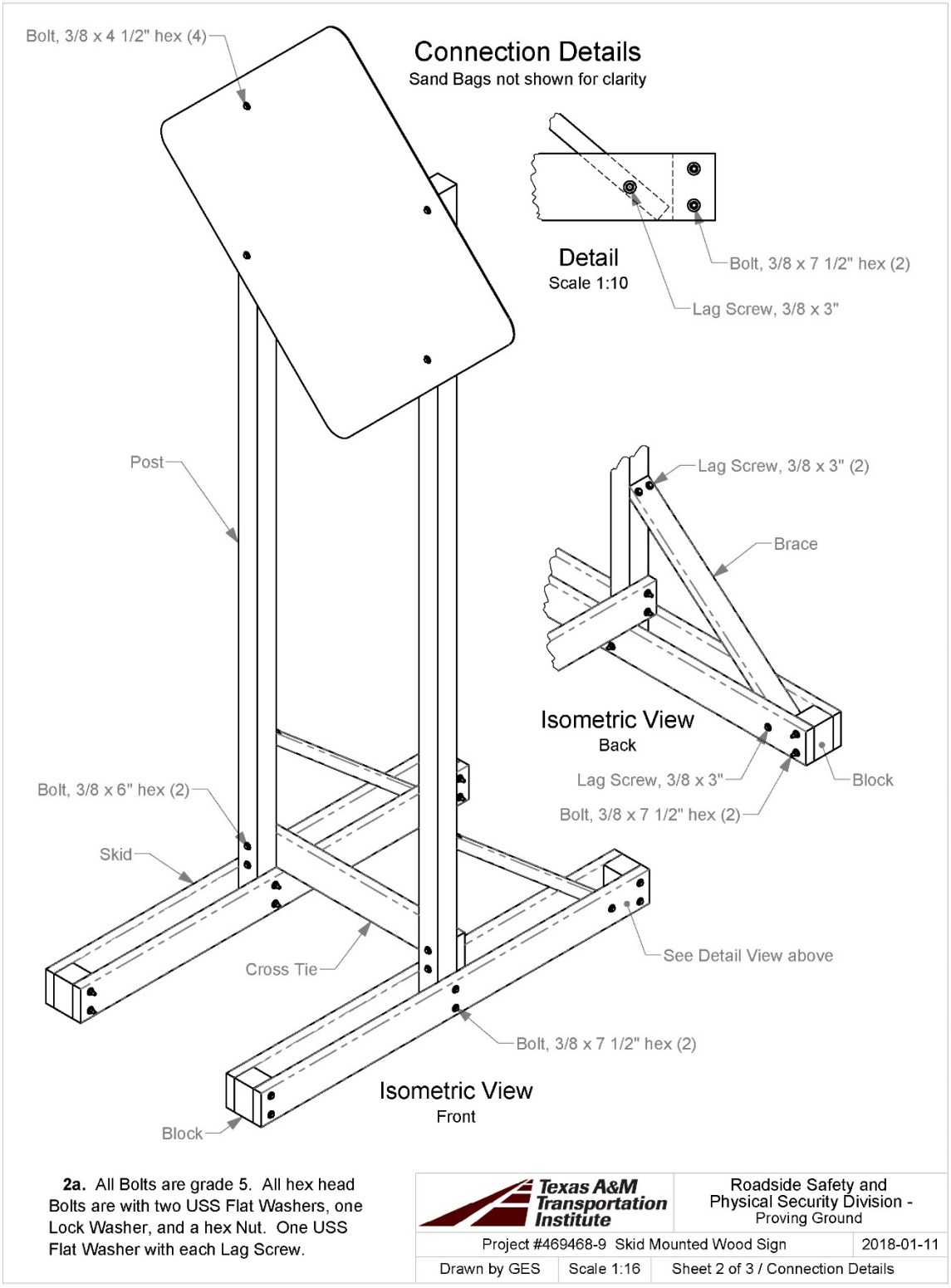

Figure 10.1. Overall Details of Skid-Mounted Dual Wood Post Temporary Sign Support System (Continued).

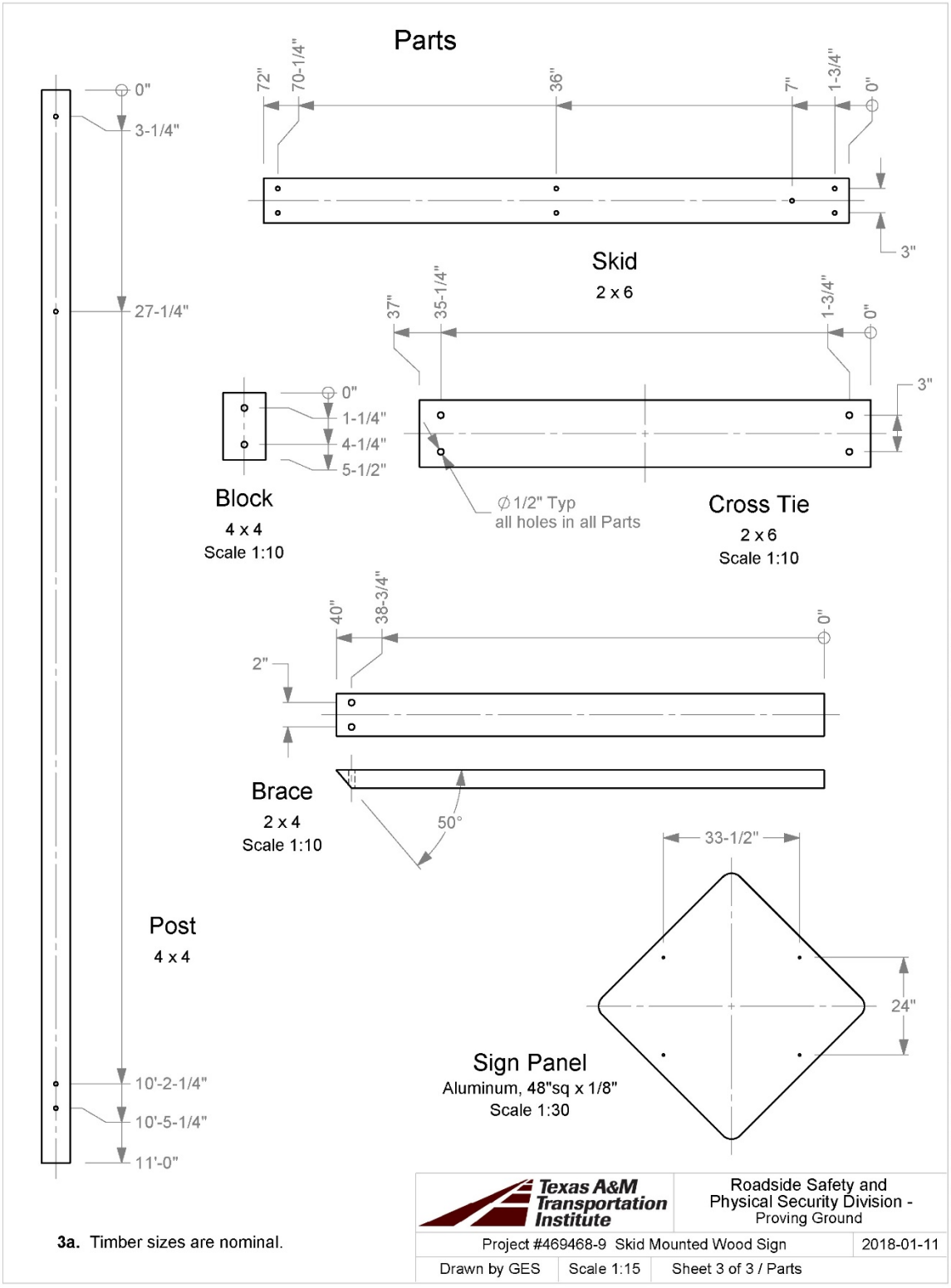

Figure 10.1. Overall Details of Skid-Mounted Dual Wood Post Temporary Sign Support System (Continued).

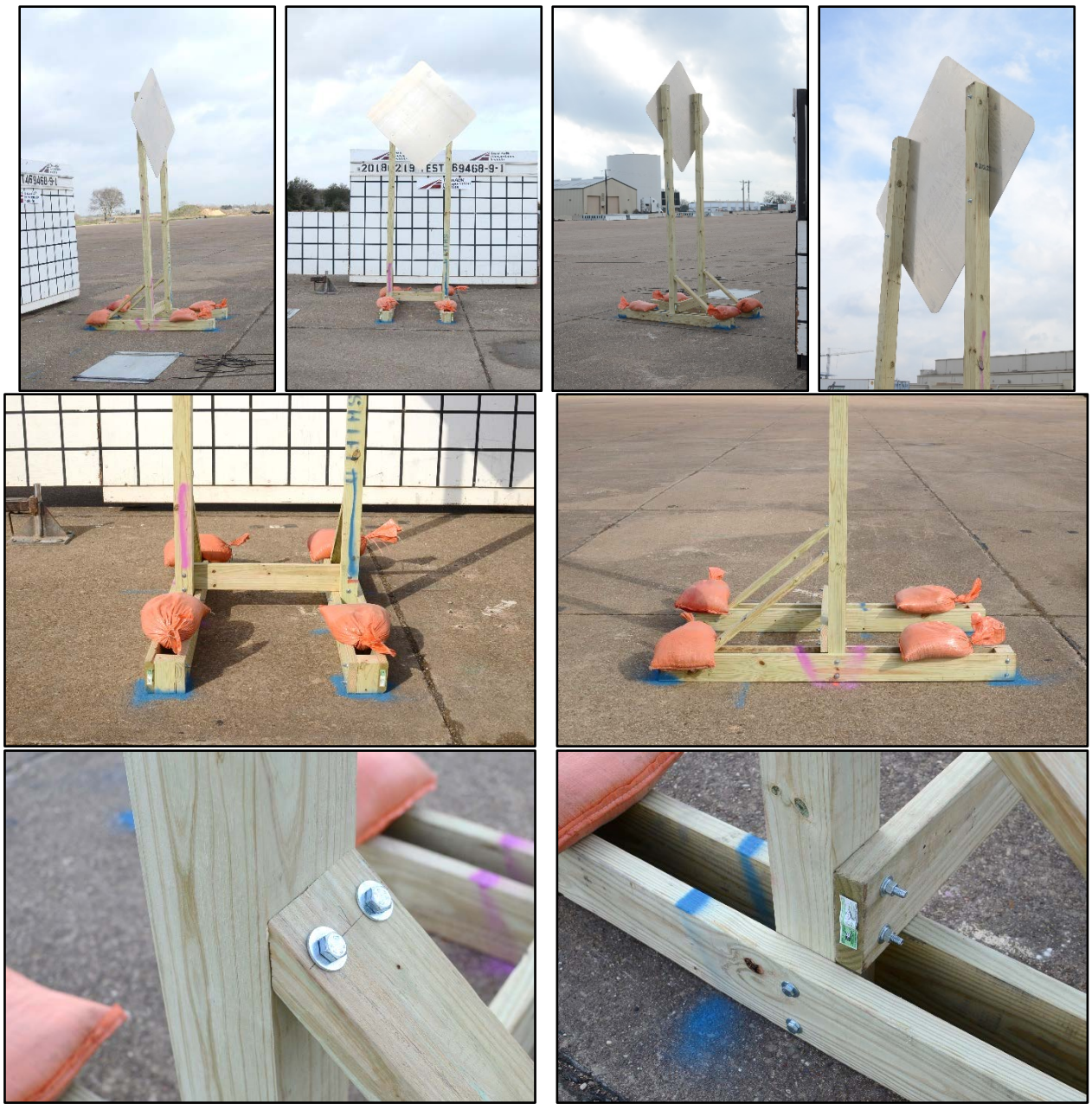

Figure 10.2. Skid-Mounted Dual Wood Post Temporary Sign Support System prior to Testing.

10.3 MASH TEST 3-72 (CRASH TEST NO. 469468-9-1)

10.3.1 Test Designation and Actual Impact Conditions

MASH Test 3-72 involves a 2270P vehicle weighing 5000 lb ±110 lb impacting the traffic control device at an impact speed of 62 mi/h ±2.5 mi/h and an angle of 90° ±1.5°. The target

impact point for *MASH* Test 3-72 on the traffic control device was the right front quarter point of the vehicle aligned with the centerline of the traffic control device.

The 2012 Dodge RAM 1500 pickup truck used in the test weighed 5034 lb, and the actual impact speed and angle were 61.1 mi/h and 90°, respectively. The actual impact point was the right front quarter point aligned with the centerline of the sign supports. Target KE was 594 kip-ft, and actual KE was 628 kip-ft.

10.3.2 Weather Conditions

The test was performed on the morning of February 19, 2018. Weather conditions at the time of testing were as follows: wind speed: 16 mi/h; wind direction: 180° (vehicle was traveling in a northerly direction); temperature: 75°F; relative humidity: 81 percent.

10.3.3 Test Vehicle

Figures 10.3 and 10.4 show the 2012 Dodge RAM 1500 pickup truck used for the crash test. The vehicle's test inertia weight was 5034 lb, and its gross static weight was 5034 lb. The height to the lower edge of the vehicle bumper was 9.5 inches, and the height to the upper edge of the bumper was 27.0 inches. The height to the vehicle's center of gravity was 28.5 inches. Tables I.1 and I.2 in Appendix I.1 give additional dimensions and information on the vehicle. The vehicle was directed into the installation using a cable reverse tow and guidance system, and was released to be freewheeling and unrestrained just prior to impact.



Figure 10.3. Skid-Mounted Dual Wood Post Temporary Sign Support System/Test Vehicle Geometrics for Test No. 469468-9-1.



Figure 10.4. Test Vehicle before Test No. 469468-9-1.

10.3.4 Test Description

The test vehicle impacted the skid-mounted dual wood post temporary sign support system at a speed of 61.1 mi/h and an angle of 90° with the right front quarter point aligned with the centerline of the sign supports. Table 10.1 lists events that occurred during Test No. 469468-9-1. Figure I.1 in Appendix I.2 presents sequential photographs during the test.

Table 10.1. Events during Test No. 469468-9-1.

TIME (s)	EVENT
0.000	Right front quarter point of vehicle contacts support
0.014	First support fractures
0.038	Impact with second support
0.041	Right front tire begins to climb over sand bags
0.049	Second support fractures
0.117	Right front tire clear of base and sand bags
0.126	Corner of sign panel impacts rear roof area of vehicle
0.293	Vehicle loses contact with device while traveling at 60.4 mi/h

10.3.5 Damage to Test Installation

Figure 10.5 shows the damage to the skid-mounted dual wood post temporary sign support system. The system fractured into several pieces. Part of the base was resting 3.5 ft downstream and another section was resting 30 ft downstream. The sign panel with sections of the support posts was resting 15 ft downstream of impact. Several smaller pieces of the base were resting 150 ft downstream and 6 ft to the left of impact and 225 ft downstream and 27 ft right of impact.

10.3.6 Damage to Test Vehicle

Figure 10.6 shows the damage sustained by the vehicle. The right side front bumper and right side hood had small dents. The rear right side of the roof sustained a 10-inch long × 6-inch dent. Maximum exterior crush to the vehicle was 1.0 inch on the rear roof. No occupant compartment deformation or intrusion was observed. Tables I.3 and I.4 in Appendix I.1 provide exterior crush and occupant compartment measurements.

10.3.7 Occupant Risk Factors

According to *MASH*, when the weight of the traffic control device is less than 220 lb, the test may be performed without vehicle instrumentation. The skid-mounted dual wood post temporary sign support system weighed 130 lb. Therefore, occupant risk factors were not obtained for this test. Figure 10.7 summarizes other pertinent information from the test.



Figure 10.5. Skid-Mounted Dual Wood Post Temporary Sign Support System after Test No. 469468-9-1.



Figure 10.6. Test Vehicle after Test No. 469468-9-1.


0.000 s

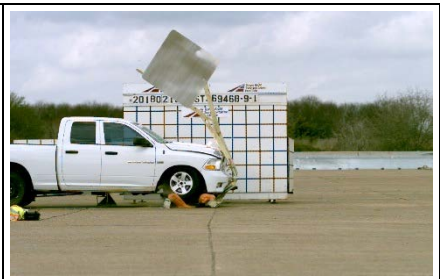
0.050 s


0.100 s


0.150 s

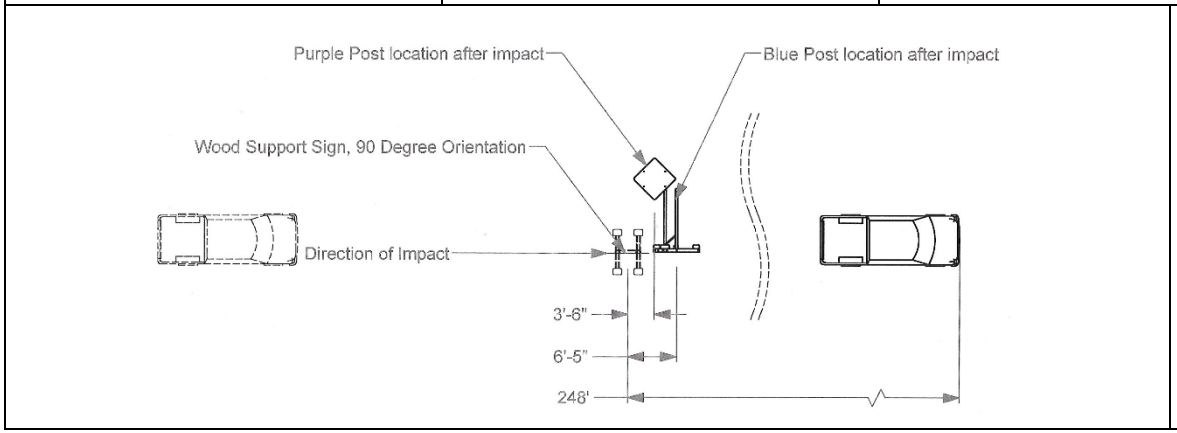

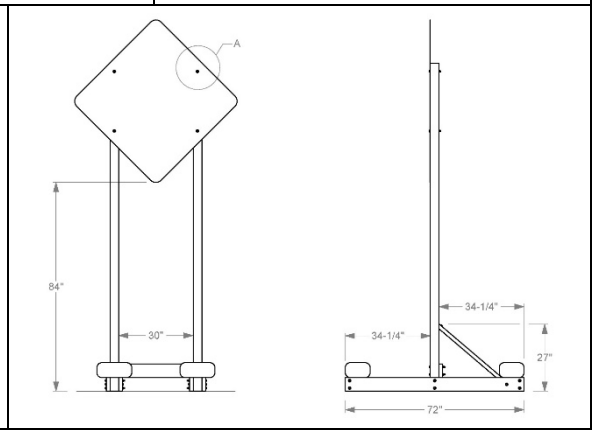

General Information
- Test Agency ..... Texas A&M Transportation Institute (TTI)
- Test Standard Test No. ..... *MASH* Test 3-72 at 90°
- TTI Test No. 469468-9-1
- Test Date 2018-02-19

Test Article
- Type ..... Work Zone Traffic Control Device
- Name ..... Skid-Mounted Dual Wood Post Temporary Sign Support System
- Installation Height ..... 84 inches from grade to bottom of sign.
- Material or Key Elements ... 48-inch square × ⅛-inch thick aluminum sign panel secured to dual 4×4 supports attached to wooden skids

Soil Type and Condition ..... Placed on concrete surface, dry

Test Vehicle
- Type/Designation 2270P
- Make and Model ..... 2012 Dodge Ram 1500
- Curb ..... 4870 lb
- Test Inertial ..... 5034 lb
- Dummy ..... No dummy
- Gross Static ..... 5034 lb

Impact Conditions
- Speed ..... 61.1 mi/h
- Angle ..... 90°
- Location/Orientation ..... Right quarter point

Kinetic Energy ..... 628 kip-ft

Exit Conditions
- Speed ..... 60.4 mi/h
- Angle ..... 90°

Post-Impact Trajectory
- Stopping Distance ..... 248 ft downstream

Test Article Debris Scatter
- Longitudinal ..... 225 ft
- Lateral ..... 27 ft

Vehicle Damage
- VDS 12FR1
- CDC 12FREN1
- Max. Exterior Deformation ..... 1.0 inch (roof)
- OCDI RF0000000
- Max. Occupant Compartment Deformation ..... None

Figure 10.7. Summary of Results for *MASH* Test 3-72 at 90° on Skid-Mounted Dual Wood Post Temporary Sign Support System.

10.3.8 Assessment of Test Results

The skid-mounted dual wood post temporary sign support system broke apart upon impact. The detached sign panel and fractured supports did not penetrate the occupant compartment. The debris did not present undue hazard to others in the area. The windshield was cracked, but no measurable deformation was observed. No other occupant compartment deformation was observed. The sign panel and supports would not block the driver's vision enough to cause loss of control of the vehicle. The 2270P vehicle remained upright during and after the collision event. The 2270P vehicle came to rest 248 ft behind device.

10.4 CONCLUSIONS

Table 10.2 shows the skid-mounted dual wood post temporary sign support system met all applicable criteria for *MASH* Test 3-72 at 90°.

Table 10.2. Performance Evaluation Summary for *MASH* Test 3-72 at 90° on Skid-Mounted Dual Wood Post Temporary Sign Support System.

Test Agency: Texas A&M Transportation Institute Test No.: 469468-9-1 Test Date: 2018-02-19

***MASH* Test 3-72 Evaluation Criteria**	**Test Results**	**Assessment**
Structural Adequacy		
B. The test article should readily activate in a predictable manner by breaking away, fracturing, or yielding.	The supports of the skid-mounted dual wood post temporary sign support system readily fractured upon impact.	Pass
Occupant Risk		
D. Detached elements, fragments, or other debris from the test article should not penetrate or show potential for penetrating the occupant compartment, or present an undue hazard to other traffic, pedestrians, or personnel in a work zone.	The detached sign panel and upright support did not penetrate the occupant compartment. The debris did not present undue hazard to others in the area.	Pass
Deformations of, or intrusions into, the occupant compartment should not exceed limits set forth in Section 5.3 and Appendix E of MASH.	The roof was dented 1.0 inch, but did not deform into the occupant compartment. No other occupant compartment deformation was observed.	
E. Detached elements, fragments, or other debris from the test article, of vehicular damage should not block the driver's vision or otherwise cause the driver to lose control of the vehicle.	The sign panel and supports would not block the driver's vision enough to cause loss of control of the vehicle.	Pass
F. The vehicle should remain upright during and after collision. The maximum roll and pitch angles are not to exceed 75 degrees.	The 2270P vehicle remained upright during and after the collision event.	Pass
H. Longitudinal and lateral occupant impact velocities should fall below the preferred value of 10 ft/s, or at least below the maximum allowable value of 16.4 ft/s.	According to *MASH*, when the weight of the traffic control device is less than 220 lb, the test can be performed without vehicle instrumentation. The skid-mounted dual wood post temporary sign support system weighed 130 lb. Therefore, occupant risk factors were not obtained for this test.	NA
I. Longitudinal and lateral occupant ridedown accelerations should fall below the preferred value of 15.0 Gs, or at least below the maximum allowable value of 20.49 Gs.		NA
Vehicle Trajectory		
N. Vehicle trajectory behind the test article is acceptable.	The 2270P vehicle came to rest 248 ft behind the original position of the test article.	Pass

CHAPTER 11:
MBGF WITH W6×8.5 STEEL POSTS IN ROCKY TERRAIN

11.1 BACKGROUND*

Guidance for installing the TxDOT MBGF in rocky terrain is found in general note 9 on metal beam guard fence standard GF(31)-14. The guidance varies depending on the depth at which rock is encountered. The most critical condition is when rock is encountered at or near the ground surface. When this occurs, the recommendation is to drill a 22-inch diameter hole (or two overlapping 12-inch diameter holes) to a depth of 24 inches into the rock. Any excess post length is cut, and the hole is backfilled with a cohesionless material.

In these tests, the MBGF with W6×8.5 steel posts in rocky terrain was evaluated in accordance with *MASH* TL-3 requirements for longitudinal barriers. The tests consisted of *MASH* test designations 3-10 (small passenger car) and 3-11 (pickup truck). The rocky terrain was simulated using a cast-in-place concrete foundation beam with precast holes. A steel post configuration was considered more critical than the rectangular wood post configuration due to its potential for increased severity of post snagging and pullout potential.

11.2 SYSTEM DETAILS

11.2.1 Test Article and Installation Details

The test installation consisted of a W-beam guardrail system with the top edge of the W-beam rail mounted 31 inches above the roadway on W6×8.5 steel posts spaced at 6.25 ft. Routered wood blockouts, nominally 6 inches × 8 inches, were inserted between the W-beam rail and posts, and the W-beam rail splices were located midspan between the posts. The guardrail was anchored on each end with a TxDOT DAT terminal making the total installation length 181.25 ft.

An unreinforced concrete beam measuring 30 inches deep × 46 inches wide × 75 ft long was placed from post 10 to post 21 in the impact area of the length-of-need to simulate rocky terrain. Oval shaped voids measuring 12 inches wide × 22 inches long × 24 inches deep were cast in the beam at each post location to simulate holes cored in rock. The W6×8.5 steel posts rested on the bottom of these voids with the traffic face of the post placed 1 inch from the front edge of the void. The voids were then backfilled with ASTM C33 coarse aggregate, size no. 57, and hand-tamped with a rod in 6-inch lifts.

Figure 11.1 presents overall information on the MBGF in rocky terrain, and Figure 11.2 provides photographs of the installation. Appendix J.1 provides further details of the MBGF in rocky terrain.

11.2.2 Material Properties

Appendix J.2 provides material certification documents for the materials used to install/construct the MBGF in rocky terrain.

* The opinions/interpretations identified/expressed in Section 11.1 are outside the scope of TTI Proving Ground's A2LA Accreditation.

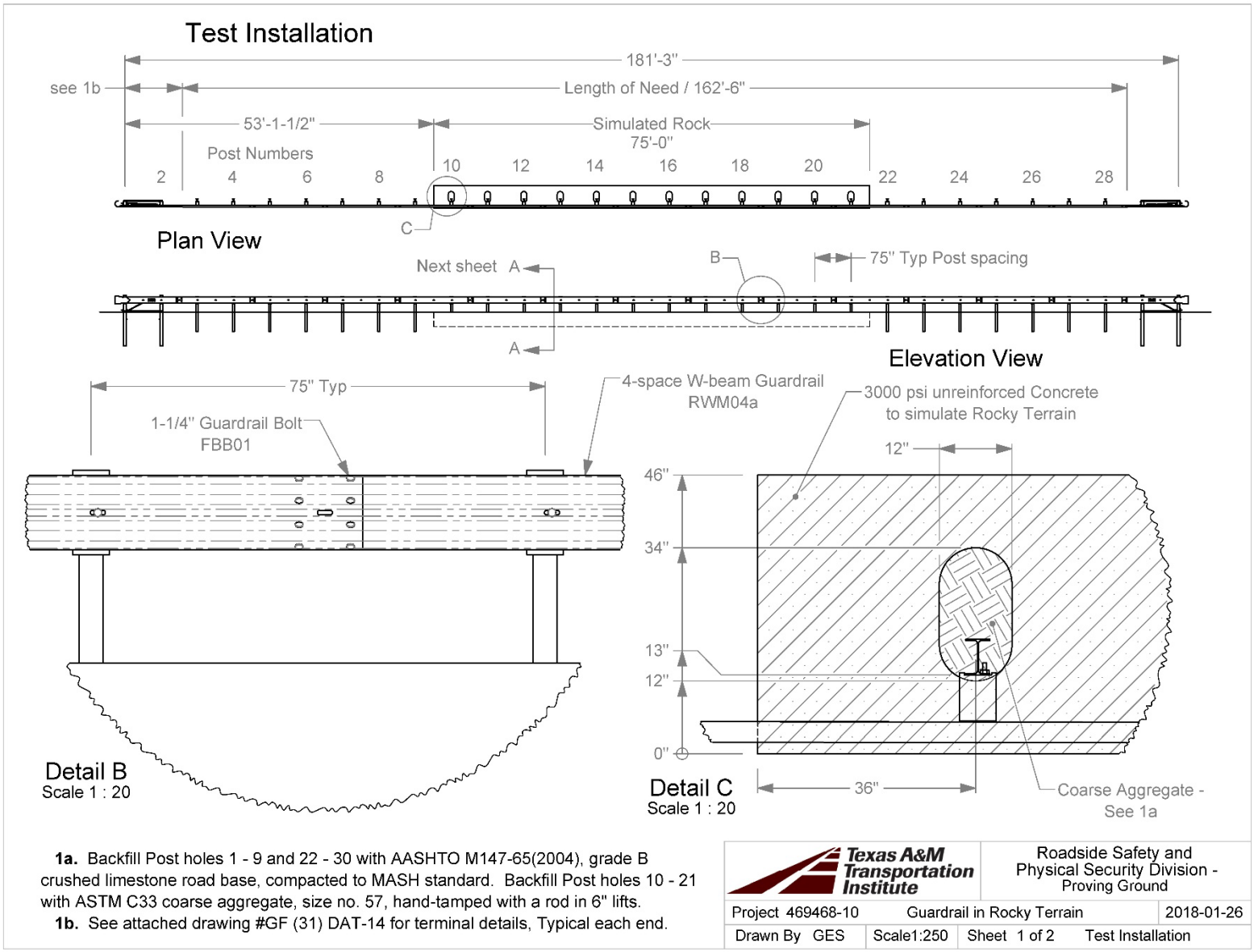

Figure 11.1. Details of MBGF in Rocky Terrain.

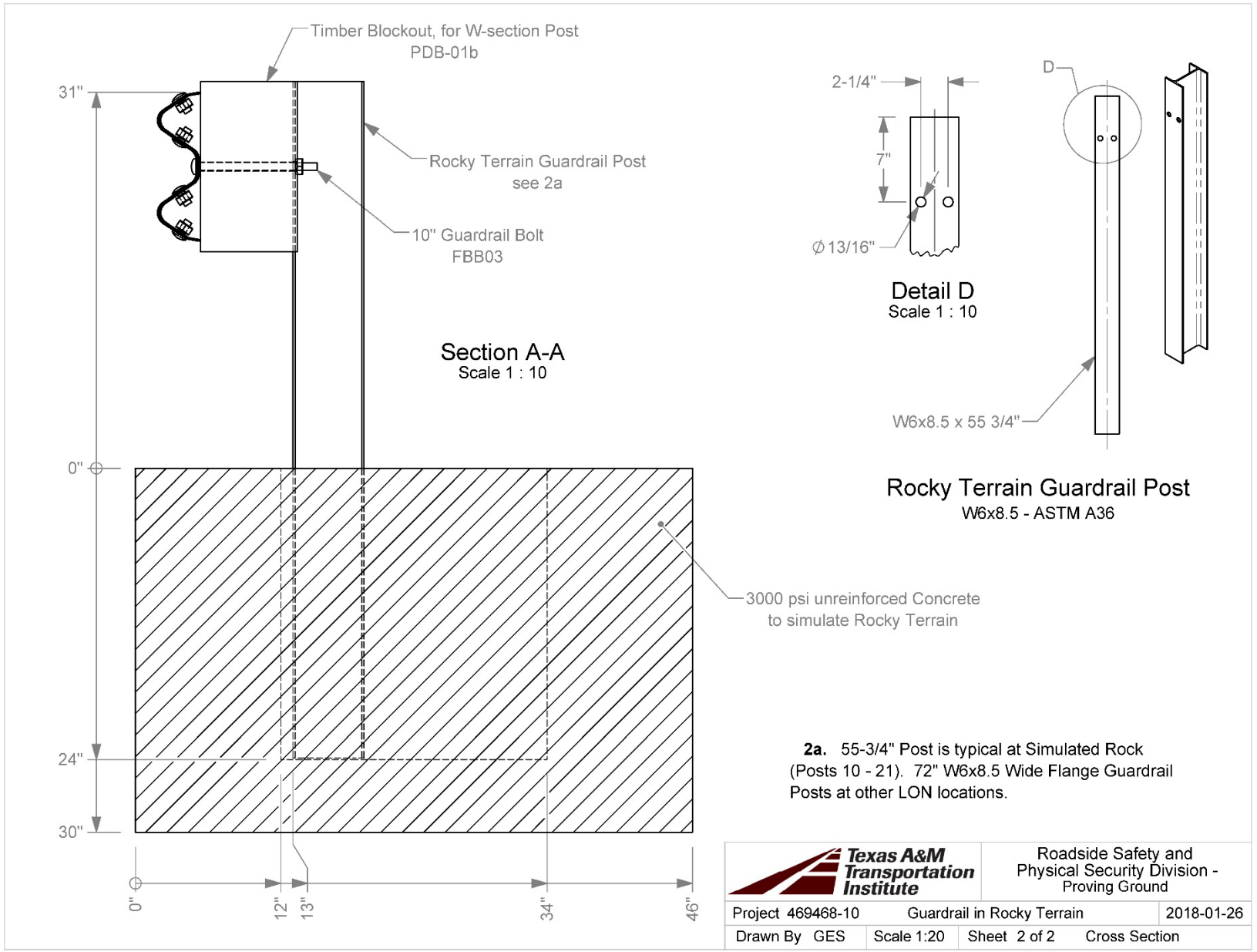

Figure 11.1. Details of MBGF in Rocky Terrain (Continued).



Figure 11.2. MBGF in Rocky Terrain prior to Testing.

11.2.3 Soil Conditions

The remainder of the posts not installed in the concrete beam were installed in soil meeting grading B of AASHTO standard specification M147-65(2004) "Materials for Aggregate and Soil Aggregate Subbase, Base and Surface Courses."

In accordance with Appendix B of *MASH*, soil strength was measured the day of the crash test. During installation of the guardrail for full-scale crash testing, two W6×16 posts were installed in the immediate vicinity of the MBGF in rocky terrain installation using the same fill

materials and installation procedures used in the test installation and the previous standard dynamic tests. Table J.1 in Appendix J.3 presents minimum soil strength properties established through the previous dynamic testing performed in accordance with *MASH* Appendix B.

As determined by the tests summarized in Appendix J.3, Table J.1, the minimum post loads required for deflections at 5 inches, 10 inches, and 15 inches, measured at a height of 25 inches, are 3940 lb, 5500 lb, and 6540 lb, respectively (90 percent of static load for the initial standard installation).

On April 26, 2018, the day of *MASH* 3-10 (Test No. 469468-10-2), measured loads on the post at deflections of 5 inches, 10 inches, and 15 inches were 8636 lbf, 8939 lbf, and 9090 lbf, respectively. Table J.2 in Appendix J.3 shows the strength of the backfill material in which the guardrail was installed met minimum *MASH* requirements.

On March 27, 2018, the day of *MASH* 3-11 (Test No. 469468-10-1), measured loads on the post at deflections of 5 inches, 10 inches, and 15 inches were 9141 lbf, 9898 lbf, and 10,000 lbf, respectively. Table J.3 in Appendix J.3 shows the strength of the backfill material in which the guardrail was installed met minimum *MASH* requirements.

11.3 *MASH* TEST 3-10 (CRASH TEST NO. 469468-10-2)

11.3.1 Test Designation and Actual Impact Conditions

MASH Test 3-10 involves an 1100C vehicle weighing 2420 lb ±55 lb impacting the CIP of the guardrail at an impact speed of 62 mi/h ±2.5 mi/h and an angle of 25° ±1.5°. Figure 11.3 shows the target CIP for *MASH* Test 3-10 on the MBGF in rocky terrain was 8 ft-6 inches ±1 ft upstream of post 15 as determined using information in *MASH* section 2.3.2.

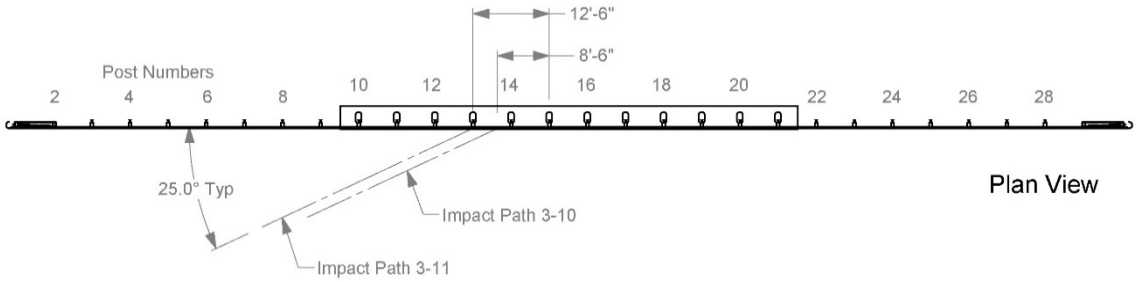

Figure 11.3. Target CIP for *MASH* TL-3 Tests on MBGF in Rocky Terrain.

The 2009 Kia Rio* used in the test weighed 2447 lb, and the actual impact speed and angle were 62.9 mi/h and 24.7°, respectively. The actual impact point was at 8.6 ft upstream of post 15. Minimum target IS was 51 kip-ft, and actual IS was 57 kip-ft.

* The 2009 model vehicle used is older than the 6-year age noted in *MASH* and was selected based upon availability. An older model vehicle is permitted by AASHTO as long as it is otherwise *MASH* compliant. Other than the vehicle's year model, this 2009 model vehicle met the *MASH* requirements.

11.3.2 Weather Conditions

The test was performed on the morning of April 26, 2018. Weather conditions at the time of testing were as follows: wind speed: 9 mi/h; wind direction: 344° (vehicle was traveling in a northwesterly direction); temperature: 63°F; relative humidity: 63 percent.

11.3.3 Test Vehicle

Figures 11.4 and 11.5 show the 2009 Kia Rio used for the crash test. The vehicle's test inertia weight was 2447 lb, and its gross static weight was 2612 lb. The height to the lower edge of the vehicle bumper was 7.75 inches, and the height to the upper edge of the bumper was 21.5 inches. Table J.4 in Appendix J.4.1 gives additional dimensions and information on the vehicle. The vehicle was directed into the installation using a cable reverse tow and guidance system, and was released to be freewheeling and unrestrained just prior to impact.



Figure 11.4. MBGF in Rocky Terrain/Test Vehicle Geometrics for Test No. 469468-10-2.



Figure 11.5. Test Vehicle before Test No. 469468-10-2.

11.3.4 Test Description

The test vehicle contacted the MBGF with steel posts in rocky terrain 8.6 ft upstream of post 15 at a speed of 62.9 mi/h and an angle of 24.7°. Table 11.1 lists events that occurred during Test No. 469468-10-2. Figures J.1 and J.2 in Appendix J.4.2 present sequential photographs during the test.

For longitudinal barriers, it is desirable that the vehicle redirects and exits the barrier within the exit box criteria (not less than 32.8 ft downstream from loss of contact for cars and pickups). The 1100C vehicle exited within the exit box criteria defined in *MASH*. After loss of contact with the barrier, the vehicle came to rest 136 ft downstream of the point of impact and 17 ft toward the field side.

Table 11.1. Events during Test No. 469468-10-2.

TIME (s)	EVENTS
0.000	Left front corner of vehicle bumper contacts guardrail
0.035	Vehicle begins to redirect
0.153	Front left tire comes off ground
0.190	Post 15 impacted by vehicle
0.211	Part of bumper extends to farthest point beyond guardrail
0.270	Vehicle contacts post 16
0.318	Vehicle becomes parallel with guardrail
0.359	Vehicle contacts post 17
0.445	Vehicle contacts post 18
0.661	Vehicle lost contact with the guardrail while traveling 30.4 mi/h at a trajectory/heading angle of 17.5°/8.5°

11.3.5 Damage to Test Installation

Figure 11.6 shows damage to the MBGF with steel posts in rocky terrain. The soil around post 1 was disturbed, and no movement was observed at posts 2 through 7. The soil around posts 8 and 9 was disturbed and the blockouts were cracked. Posts 10 through 14 were leaning toward field side at 87°, 85°, 81°, 75°, and 65°, respectively. The rail separated from posts 14 through 18, and the blockouts separated from posts 14 and 18. Posts 15 through 17 were pulled from their holes. Post 17 was resting 2.5 ft toward traffic lanes, post 15 was resting 2.5 ft toward the field side, and the rest of the pulled out posts were resting near the rail. Post 18 was leaning 16° downstream and 80° toward the field side. Posts 19, 20 and 21 were leaning 83°, 86°, and 88° toward field side, respectively. Post 22 was leaning 88° upstream and toward the field side and rotated slightly clockwise. Posts 23 through 25 were leaning upstream and toward the field side 88°, and the blockouts were twisted on the post. Posts 26 through 30 were leaning upstream 88°. Working width was 75.9 inches, and height of working width was 39.5 inches. Maximum dynamic deflection during the test was 40.5 inches, and maximum permanent deformation was 21.0 inches.



Figure 11.6. Posts 13 through 20 after Test No. 469468-10-2.

11.3.6 Damage to Test Vehicle

Figure 11.7 shows the damage sustained by the vehicle. The front bumper, hood, grill, radiator and support, left front fender, left front strut and tower, left front tire and rim, and left front door were damaged. Maximum exterior crush to the vehicle was 9.0 inches in the front and side plane at the left front corner at bumper height. No occupant compartment deformation or intrusion occurred. Figure 11.8 shows the interior of the vehicle. Tables J.5 and J.6 in Appendix J.4.1 provide exterior crush and occupant compartment measurements.



Figure 11.7. Test Vehicle after Test No. 469468-10-2.



Figure 11.8. Interior of Test Vehicle after Test No. 469468-10-2.

11.3.7 Occupant Risk Factors

Data from the accelerometer, located at the vehicle center of gravity, were digitized for evaluation of occupant risk, and the results are shown in Table 11.2. Figure 11.9 summarizes these data and other pertinent information from the test. Figure J.3 in Appendix J.4.3 shows the vehicle angular displacements, and Figures J.4 through J.9 in Appendix J.4.4 show acceleration versus time traces.

11.3.8 Assessment of Test Results

Table 11.3 provides an assessment of the test based on the applicable safety evaluation criteria for *MASH* Test 3-11.

Table 11.2. Occupant Risk Factors for Test No. 469468-10-2.

Occupant Risk Factor	Value	Time
OIV		
Longitudinal	**17.7 ft/s**	at 0.1440 s on left side of interior
Lateral	**14.8 ft/s**	
Occupant Ridedown Accelerations		
Longitudinal	**7.8 g**	0.4048–0.4148 s
Lateral	**8.9 g**	0.1535–0.1635 s
THIV	**23.4 km/h** **6.5 m/s**	At 0.1390 s on left side of interior
PHD	**9.8 g**	0.1535–0.1635 s
ASI	**0.64**	0.0847–0.1347 s
Maximum 50-ms Moving Average		
Longitudinal	**−6.2 g**	0.0807–0.1307 s
Lateral	**4.9 g**	0.1533–0.2033 s
Vertical	**3.5 g**	0.2194–0.2694 s
Maximum Roll, Pitch, and Yaw Angles		
Roll	**15°**	0.2360 s
Pitch	**10°**	1.9633 s
Yaw	**45°**	0.6140 s



0.000 s



0.200 s



0.400 s



0.700 s

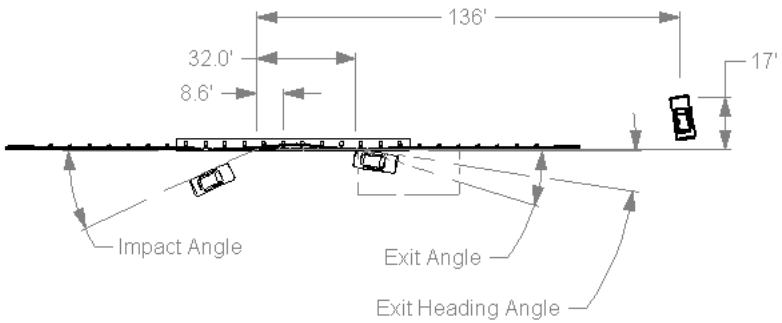

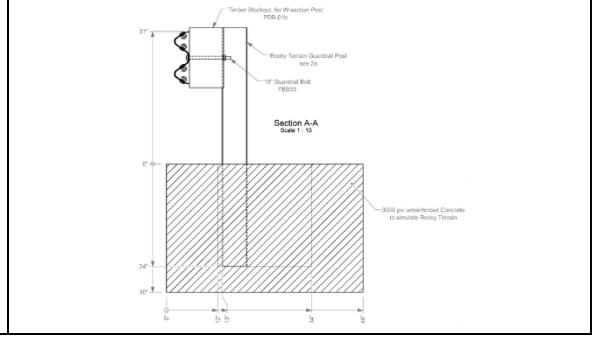

General Information
- Test Agency ..... Texas A&M Transportation Institute (TTI)
- Test Standard Test No. ..... *MASH* Test 3-10
- TTI Test No. 469468-10-2
- Test Date 2018-04-26

Test Article
- Type ..... Guardrail
- Name ..... TxDOT MBGF in Rocky Terrain
- Installation Length ..... 181 ft 3 inches
- Material or Key Elements ... 31-inch tall W-beam guardrail on W6×8.5 steel posts in simulated rocky terrain
- **Soil Type and Condition** ..... 75-ft concrete beam with 12×22×24-inch deep leave-outs filled with cohesionless material, Dry

Test Vehicle
- Type/Designation 1100C
- Make and Model ..... 2009 Kia Rio
- Curb ..... 2462 lb
- Test Inertial ..... 2447 lb
- Dummy ..... 165 lb
- Gross Static ..... 2612 lb

Impact Conditions
- Speed ..... 62.9 mi/h
- Angle ..... 24.7°
- Location/Orientation ..... 8.6 ft upstream of post 15

Impact Severity ..... 57 kip-ft

Exit Conditions
- Speed ..... 30.4 mi/h
- Trajectory/Heading Angle ... 17.5°/8.5°

Occupant Risk Values
- Longitudinal OIV ..... 17.7 ft/s
- Lateral OIV ..... 14.8 ft/s
- Longitudinal Ridedown ..... 7.8 g
- Lateral Ridedown ..... 8.9 g
- THIV ..... 23.4 km/h
- PHD ..... 9.8 g
- ASI 0.64

Max. 0.050-s Average
- Longitudinal ..... −6.2 g
- Lateral ..... 4.9 g
- Vertical ..... 3.5 g

Post-Impact Trajectory
- Stopping Distance ..... 136 ft downstream 17 ft twd field side

Vehicle Stability
- Maximum Yaw Angle ..... 45°
- Maximum Pitch Angle ..... 10°
- Maximum Roll Angle ..... 15°
- Vehicle Snagging ..... No
- Vehicle Pocketing ..... No

Test Article Deflections
- Dynamic ..... 40.5 inches
- Permanent ..... 21.0 inches
- Working Width ..... 75.9 inches
- Height of Working Width ..... 39.5 inches

Vehicle Damage
- VDS 11LFQ5
- CDC 11FLEW4
- Max. Exterior Deformation ..... 9.0 inches
- OCDI LS0000000
- Max. Occupant Compartment Deformation ..... None

Figure 11.9. Summary of Results for *MASH* Test 3-10 on MBGF in Rocky Terrain.

Table 11.3. Performance Evaluation Summary for *MASH* Test 3-11 on MBGF with Steel Posts in Rocky Terrain.

Test Agency: Texas A&M Transportation Institute Test No.: 469468-10-2 Test Date: 2018-03-27

***MASH* Test 3-11 Evaluation Criteria**	**Test Results**	**Assessment**
Structural Adequacy		
A. Test article should contain and redirect the vehicle or bring the vehicle to a controlled stop; the vehicle should not penetrate, underride, or override the installation although controlled lateral deflection of the test article is acceptable	The MBGF with W6×8.5 posts in rocky terrain contained and redirected the 1100C vehicle. The vehicle did not penetrate, underride, or override the installation. Maximum dynamic deflection during the test was 40.5 inches.	Pass
Occupant Risk		
D. Detached elements, fragments, or other debris from the test article should not penetrate or show potential for penetrating the occupant compartment, or present an undue hazard to other traffic, pedestrians, or personnel in a work zone.	Post and blockout fragments were present but did not penetrate or show potential for penetrating the occupant compartment, or to present undue hazard to others in the area.	Pass
Deformations of, or intrusions into, the occupant compartment should not exceed limits set forth in Section 5.3 and Appendix E of MASH.	No occupant compartment deformation or intrusion occurred.	
F. The vehicle should remain upright during and after collision. The maximum roll and pitch angles are not to exceed 75 degrees.	The 1100C vehicle remained upright during and after the collision event. Maximum roll and pitch angles were 15° and 10°, respectively.	Pass
H. Longitudinal and lateral occupant impact velocities should fall below the preferred value of 30 ft/s, or at least below the maximum allowable value of 40 ft/s.	Longitudinal OIV was 17.7 ft/s, and lateral OIV was 14.8 ft/s.	Pass
I. Longitudinal and lateral occupant ridedown accelerations should fall below the preferred value of 15.0 gs, or at least below the maximum allowable value of 20.49 gs.	Maximum longitudinal occupant ridedown acceleration was 7.8 g, and maximum lateral occupant ridedown acceleration was 8.9 g.	Pass
Vehicle Trajectory		
For redirective devices, it is preferable that the vehicle be smoothly redirected and leave the barrier within the exit box criteria (not less than 32.8 ft for the 1100C and 2270P vehicles) and should be documented.	The 1100C vehicle exited within the exit box criteria.	Documentation only

11.4 *MASH* TEST 3-11 (CRASH TEST NO. 469468-10-1)

11.4.1 Test Designation and Actual Impact Conditions

MASH Test 3-11 involves a 2270P vehicle weighing 5000 lb ±110 lb impacting the CIP of the guardrail at an impact speed of 62 mi/h ±2.5 mi/h and an angle of 25° ±1.5°. Figure 10.3 shown in Section 10.3.1 shows the target CIP for *MASH* Test 3-11 on the MBGF in rocky terrain was 12 ft-6 inches ±1 ft upstream of post 15 (i.e., post 13) as determined using information in *MASH* section 2.3.2.

The 2012 Dodge RAM 1500 pickup truck used in the test weighed 5017 lb, and the actual impact speed and angle were 63.3 mi/h and 24.4 degrees, respectively. The actual impact point was at 12.8 ft upstream of post 15. Minimum target impact severity was 106 kip-ft, and actual IS was 115 kip-ft.

11.4.2 Weather Conditions

The test was performed on the morning of March 27, 2018. Weather conditions at the time of testing were as follows: wind speed: 15 mi/h; wind direction: 202° (vehicle was traveling in a northwesterly direction); temperature: 77°F; relative humidity: 74 percent.

11.4.3 Test Vehicle

Figures 11.10 and 11.11 show the 2012 Dodge RAM 1500 pickup truck used for the crash test. The vehicle's test inertia weight was 5017 lb, and its gross static weight was 5017 lb. The height to the lower edge of the vehicle bumper was 11.75 inches, and the height to the upper edge of the bumper was 27.0 inches. The height to the vehicle's center of gravity was 28.5 inches. Tables J.7 and J.8 in Appendix J.5.1 give additional dimensions and information on the vehicle. The vehicle was directed into the installation using a cable reverse tow and guidance system, and was released to be freewheeling and unrestrained just prior to impact.



Figure 11.10. MBGF in Rocky Terrain/Test Vehicle Geometrics for Test No. 469468-10-1.



Figure 11.11. Test Vehicle before Test No. 469468-10-1.

11.4.4 Test Description

The test vehicle contacted the MBGF with steel posts in rocky terrain 12.8 ft upstream of post 15 at a speed of 63.3 mi/h and an angle of 24.4°. Table 11.4 lists events that occurred during Test No. 469468-10-1. Figures J.10 and J.11 in Appendix J.5.2 present sequential photographs during the test.

For longitudinal barriers, it is desirable that the vehicle redirects and exits the barrier within the exit box criteria (not less than 32.8 ft downstream from loss of contact for cars and pickups). The 2270P vehicle exited within the exit box criteria defined in *MASH*. After loss of contact with the barrier, the vehicle came to rest 150 ft downstream of the impact and 28 ft toward the field side.

Table 11.4. Events during Test No. 469468-10-1.

TIME (s)	EVENTS
0.000	Left front corner of vehicle bumper contacts guardrail
0.060	Vehicle begins to redirect
0.085	Left front tire makes contact with post 14
0.990	Blockout at post 14 fractures
0.185	Post 15 completely out of ground
0.248	Left side of pickup bed begins to make contact with guardrail
0.292	Vehicle contacted post 16
0.305	Vehicle became parallel with the guardrail
0.390	Post 13 and 14 at maximum displacement before recovering a bit
0.425	Maximum deflection of guardrail occurs
0.614	Vehicle loses contact with guardrail while traveling at 34.2 mi/h and trajectory/heading angle of 16.3°/10.9°

11.4.5 Damage to Test Installation

Figures 11.12 and 11.13 show damage to the MBGF in rocky terrain. Post 1 was pulled upstream 1.75 inches, and post 2 was pulled upstream 0.75 inch. The W-beam rail element released from posts 3 through 10 and 14 through 20. Posts 10 and 11 were pulled slightly downstream and pushed toward the field side. Post 12 was leaning 85° downstream and 76° toward the field side. Post 13 was leaning 84° downstream and 65° toward field side. Posts 14 through 18 pulled out of their holes and released from the rail element. Post 14 was resting 10 inches downstream and 3 ft toward the field side. Post 15 was resting 11.5 ft downstream and 5 ft toward the field side. Post 16 was resting 18 ft downstream and 5 ft toward the field side. Post 17 was resting 21 ft downstream and 6.5 ft toward the field side. Post 18 dislodged from the ground but remained adjacent to the guardrail. Post 19 was leaning 34° from horizontal. Post 20 was leaning 83° downstream and 82° toward the field side. Posts 21 through 30 were intact. The soil around posts 29 and 30 was disturbed. Working width was 76.2 inches, and height of working width was 11 inches. Maximum dynamic deflection during the test was 74.8 inches, and maximum permanent deformation was 41 inches.

11.4.6 Damage to Test Vehicle

Figure 11.14 shows the damage sustained by the vehicle. The front bumper, hood, grill, left front fender, left front tire and rim, left upper and lower ball joints, left front and rear doors, left exterior bed, and rear bumper were damaged. Maximum exterior crush to the vehicle was 7.0 inches in the front and side plane at the left front corner at bumper height. No occupant compartment deformation or intrusion occurred. Figure 11.15 shows the interior of the vehicle. Tables J.9 and J.10 in Appendix J.4.2 provide exterior crush and occupant compartment measurements.

11.4.7 Occupant Risk Factors

Data from the accelerometer, located at the vehicle center of gravity, were digitized for evaluation of occupant risk, and the results are shown in Table 11.5. Figure 10.16 summarizes these data and other pertinent information from the test. Figure J.12 in Appendix J.5.3 shows the vehicle angular displacements, and Figures J.13 through J.18 in Appendix J.5.4 show acceleration versus time traces.

11.4.8 Assessment of Test Results

Table 11.6 provides an assessment of the test based on the applicable safety evaluation criteria for *MASH* Test 3-11.



Figure 11.12. Posts 13 through 20 after Test No. 469468-10-1.



Figure 11.13. Upstream Terminal after Test No. 469468-10-1.



Figure 11.14. Test Vehicle after Test No. 469468-10-1.



Before Test After Test

Figure 11.15. Interior of Test Vehicle for Test No. 469468-10-1.

Table 11.5. Occupant Risk Factors for Test No. 469468-10-1.

Occupant Risk Factor	Value	Time
OIV		
Longitudinal	**13.4 ft/s**	at 0.1652 s on left side of interior
Lateral	**13.8 ft/s**	
Occupant Ridedown Accelerations		
Longitudinal	**7.3 g**	0.5725–0.5825 s
Lateral	**7.8 g**	0.3945–0.4045 s
THIV	**20.4 km/h** **5.7 m/s**	At 0.1583 s on left side of interior
PHD	**7.8 g**	0.5725–0.5825 s
ASI	**0.63**	0.3945–0.4445 s
Maximum 50-ms Moving Average		
Longitudinal	**−4.0 g**	0.0711–0.1211 s
Lateral	**5.3 g**	0.3658–0.4158 s
Vertical	**−2.9 g**	0.4956–0.5456 s
Maximum Roll, Pitch, and Yaw Angles		
Roll	**8°**	0.8200 s
Pitch	**17°**	0.7821 s
Yaw	**47°**	0.7723 s


0.000 s


0.200 s


0.400 s


0.700 s

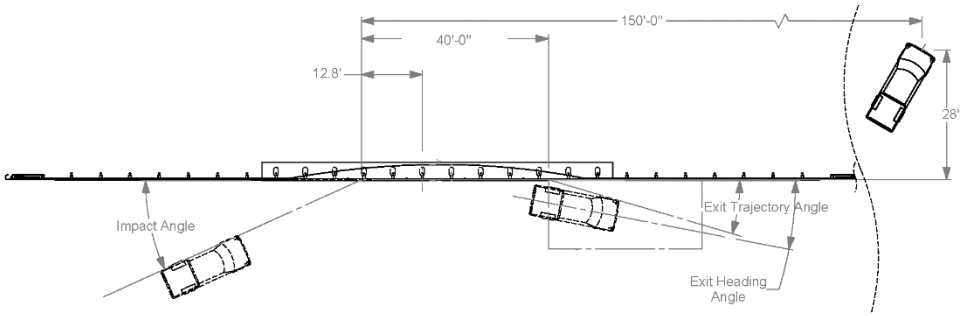

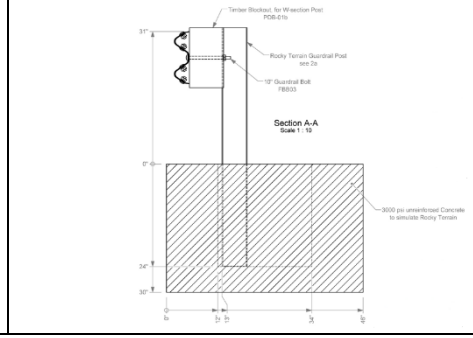

General Information
- Test Agency: Texas A&M Transportation Institute (TTI)
- Test Standard Test No.: *MASH* Test 3-11
- TTI Test No.: 469468-10-1
- Test Date: 2018-03-27

Test Article
- Type: Guardrail
- Name: TxDOT MBGF in Rocky Terrain
- Installation Length: 181 ft 3 inches
- Material or Key Elements: 31-inch tall W-beam guardrail on W6×8.5 steel posts in simulated rocky terrain
- **Soil Type and Condition**: 75-ft concrete beam with 12×22×24-inch deep leave-outs filled with cohesionless material, Dry

Test Vehicle
- Type/Designation: 2270P
- Make and Model: 2012 Dodge RAM 1500 pickup truck
- Curb: 4850 lb
- Test Inertial: 5017 lb
- Dummy: No dummy
- Gross Static: 5017 lb

Impact Conditions
- Speed: 63.3 mi/h
- Angle: 24.4°
- Location/Orientation: 12.8 ft upstream of post 15

Impact Severity: 115 kip-ft

Exit Conditions
- Speed: 34.2 mi/h
- Exit Trajectory: 16.3°
- Heading Angle: 10.9°

Occupant Risk Values
- Longitudinal OIV: 13.4 ft/s
- Lateral OIV: 13.8 ft/s
- Longitudinal Ridedown: 7.3 g
- Lateral Ridedown: 7.8 g
- THIV: 20.4 km/h
- PHD: 7.8 g
- ASI: 0.63

Max. 0.050-s Average
- Longitudinal: -4.0 g
- Lateral: 5.3 g
- Vertical: -2.9 g

Post-Impact Trajectory
- Stopping Distance: 150 ft downstream 28 ft twd field

Vehicle Stability
- Maximum Yaw Angle: 47°
- Maximum Pitch Angle: 17°
- Maximum Roll Angle: 8°
- Vehicle Snagging: No
- Vehicle Pocketing: No

Test Article Deflections
- Dynamic: 74.8 inches
- Permanent: 41 inches
- Working Width: 79.0 inches
- Height of Working Width: 10.9 inches

Vehicle Damage
- VDS: 11LFQ5
- CDC: 11FLEW3
- Max. Exterior Deformation: 7.0 inches
- OCDI: LS0000000
- Max. Occupant Compartment Deformation: None

Figure 11.16. Summary of Results for *MASH* Test 3-11 on MBGF with Steel Posts in Rocky Terrain.

Table 11.6. Performance Evaluation Summary for *MASH* Test 3-11 on MBGF with Steel Posts in Rocky Terrain.

Test Agency: Texas A&M Transportation Institute Test No.: 469468-10-1 Test Date: 2018-03-27

***MASH* Test 3-11 Evaluation Criteria**	**Test Results**	**Assessment**
Structural Adequacy		
A. Test article should contain and redirect the vehicle or bring the vehicle to a controlled stop; the vehicle should not penetrate, underride, or override the installation although controlled lateral deflection of the test article is acceptable	The MBGF with W6×8.5 steel posts in rocky terrain contained and redirected the 2270P vehicle. The vehicle did not penetrate, underride, or override the installation. Maximum dynamic deflection during the test was 74.8 inches.	Pass
Occupant Risk		
D. Detached elements, fragments, or other debris from the test article should not penetrate or show potential for penetrating the occupant compartment, or present an undue hazard to other traffic, pedestrians, or personnel in a work zone. *Deformations of, or intrusions into, the occupant compartment should not exceed limits set forth in Section 5.3 and Appendix E of MASH.*	Post and blockout fragments were present but did not penetrate or show potential for penetrating the occupant compartment, or to present undue hazard to others in the area. No occupant compartment deformation or intrusion occurred.	Pass
F. The vehicle should remain upright during and after collision. The maximum roll and pitch angles are not to exceed 75 degrees.	The 2270P vehicle remained upright during and after the collision event. Maximum roll and pitch angles were 8° and 17°, respectively.	Pass
H. Longitudinal and lateral occupant impact velocities should fall below the preferred value of 30 ft/s, or at least below the maximum allowable value of 40 ft/s.	Longitudinal OIV was 13.4 ft/s, and lateral OIV was 13.8 ft/s.	Pass
I. Longitudinal and lateral occupant ridedown accelerations should fall below the preferred value of 15.0 gs, or at least below the maximum allowable value of 20.49 gs.	Maximum longitudinal occupant ridedown acceleration was 7.3 g, and maximum lateral occupant ridedown acceleration was 7.8 g.	Pass
Vehicle Trajectory		
For redirective devices, it is preferable that the vehicle be smoothly redirected and leave the barrier within the exit box criteria (not less than 32.8 ft for the 1100C and 2270P vehicles) and should be documented.	The 2270P vehicle exited within the exit box criteria.	Documentation only

11.5 CONCLUSIONS

The MBGF with W6×8.5 steel posts in rocky terrain contained and redirected the 1100C vehicle. The vehicle did not penetrate, underride, or override the installation. Maximum dynamic deflection during the test was 40.5 inches. Post and blockout fragments were present but did not penetrate or show potential for penetrating the occupant compartment, or to present undue hazard to others in the area. No occupant compartment deformation or intrusion occurred. The 1100C vehicle remained upright during and after the collision event. Maximum roll and pitch angles were 15° and 10°, respectively. Occupant risk factors were within the preferred limits specified in *MASH*. The 1100C vehicle exited within the exit box criteria.

The MBGF with W6×8.5 steel posts in rocky terrain contained and redirected the 2270P vehicle. The vehicle did not penetrate, underride, or override the installation. Maximum dynamic deflection during the test was 74.8 inches. Post and blockout fragments were present but did not penetrate or show potential for penetrating the occupant compartment, or to present undue hazard to others in the area. No occupant compartment deformation or intrusion occurred. The 2270P vehicle remained upright during and after the collision event. Maximum roll and pitch angles were 8° and 17°, respectively. Occupant risk factors were within the preferred limits specified in *MASH*. The 2270P vehicle exited within the exit box criteria.

Table 11.7 shows the MBGF with W6×8.5 steel posts in rocky terrain performed acceptably for *MASH* TL-3.

Table 11.7. Assessment Summary for *MASH* TL-3 Tests on TxDOT MBGF with W6×8.5 Steel Posts in Rocky Terrain.

Evaluation Factors	Evaluation Criteria	Test No. 469468-10-2	Test No. 469468-10-1
Structural Adequacy	A	S	S
Occupant Risk	D	S	S
	F	S	S
	H	S	S
	I	S	S
	Test No.	***MASH* Test 3-10**	***MASH* Test 3-11**
	Pass/Fail	Pass	Pass

S = Satisfactory
U = Unsatisfactory
N/A = Not Applicable

CHAPTER 12:
MBGF WITH ROUND WOOD POSTS IN ROCKY TERRAIN

12.1 BACKGROUND*

Guidance for installing the TxDOT MBGF in rocky terrain is found in general note 9 on metal beam guard fence standard GF(31)-14. TxDOT standards permit the use of three types of guardrail posts: a W6×8.5 steel post, a nominal 6-inch × 8-inch rectangular wood post, and a round wood post with a minimum 7-inch diameter.

The steel post configuration in rocky terrain was successfully tested as documented in Chapter 11 of this report. *MASH* Test 3-11 of the TxDOT MBGF with round wood posts was unsuccessful as described in Chapter 6 of this report. In this test, several of the wood posts fractured and the vehicle overrode the guardrail installation. Based on this result, it was recommended that the guardrail in rocky terrain be further evaluated with round wood posts.

The primary consideration for the evaluation of the W-beam guardrail with round wood posts is structural adequacy. *MASH* Test 3-11 with the pickup truck was considered the critical test. The impact performance with the passenger car should be acceptable based on the reduced snagging severity associated with the geometry of the round post compared to the steel post that was successfully tested.

12.2 SYSTEM DETAILS

12.2.1 Test Article and Installation Details

The test installation consisted of a W-beam guardrail system with the top edge of the W-beam rail mounted 31 inches above the roadway on nominal 7-inch diameter wood posts spaced at 6.25 ft. Routered wood blockouts, nominally 6 in. × 8 in., were inserted between the W-beam rail and posts, and the W-beam rail splices were located midspan between the posts. The guardrail was anchored on each end with a TxDOT DAT terminal making the total installation length 181.25 ft.

An unreinforced concrete beam measuring 30 inches deep × 46 inches wide × 75 ft long was placed from post 10 to post 21 in the impact area of the length-of-need to simulate rocky terrain. Oval shaped voids measuring 12 inches wide × 22 inches long × 24 inches deep were cast in the beam at each post location to simulate holes cored in rock. The 7-inch diameter wood posts rested on the bottom of these voids with the traffic face of the post placed 1 inch from the front edge of the void. The voids were then backfilled with ASTM C33 coarse aggregate, size no. 57, and hand-tamped with a rod in 6-inch lifts.

Figure 12.1 presents overall information on the MBGF with round wood posts in rocky terrain, and Figure 12.2 provides photographs of the installation. Appendix K.1 provides further details of the MBGF in rocky terrain.

* The opinions/interpretations identified/expressed in Section 12.1 are outside the scope of TTI Proving Ground's A2LA Accreditation.

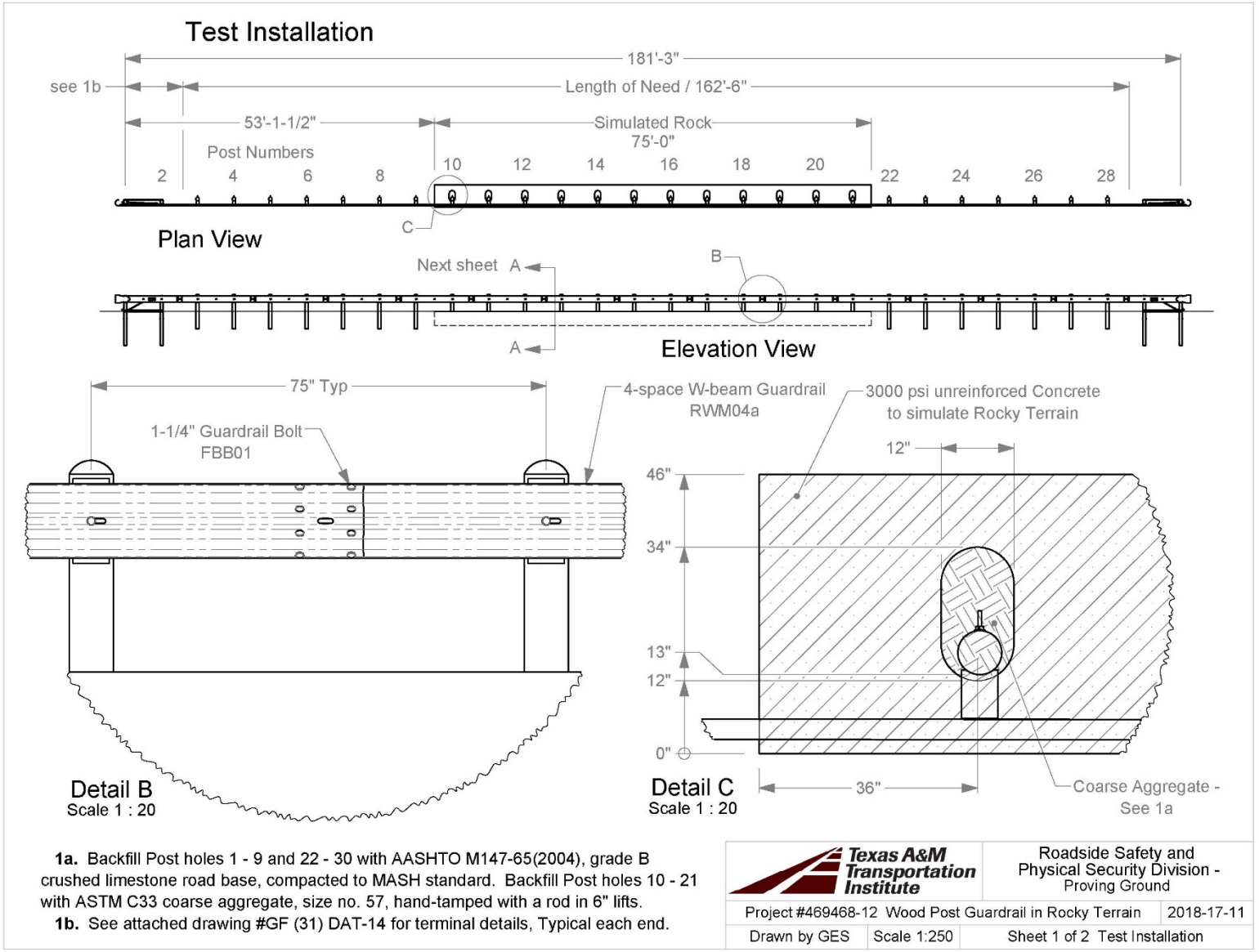

Figure 12.1. Details of Round Post Guardrail in Rocky Terrain.

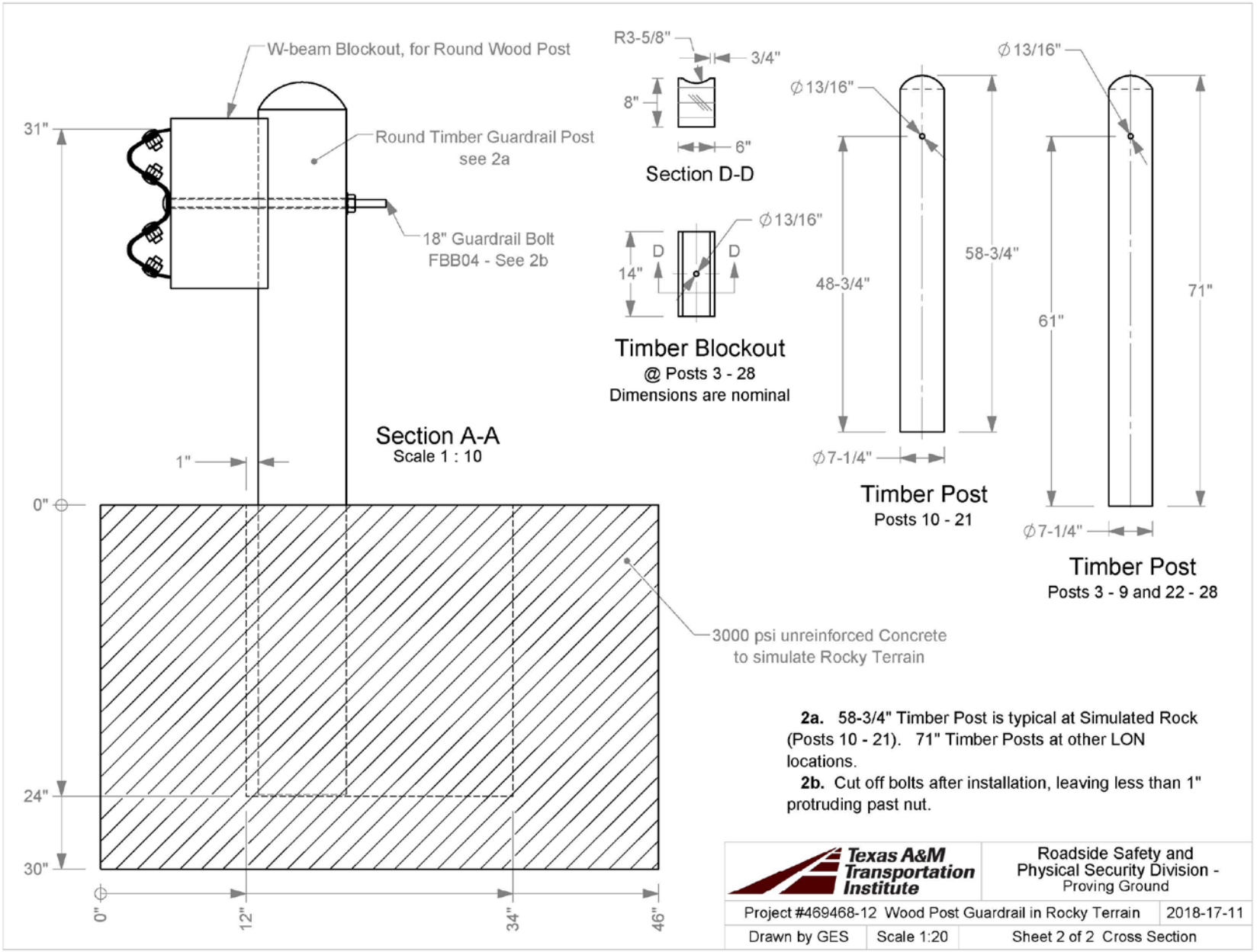

Figure 12.1. Details of Round Post Guardrail in Rocky Terrain (Continued).



Figure 12.2. MBGF With Round Wood Posts in Rocky Terrain prior to Testing.

12.2.2 Material Properties

Appendix K.2 provides material certification documents for the materials used to install/construct the MBGF in rocky terrain.

12.2.3 Soil Conditions

The remainder of the posts not installed in the concrete beam were installed in soil meeting grading B of AASHTO standard specification M147-65(2004) “Materials for Aggregate

and Soil Aggregate Subbase, Base and Surface Courses." In accordance with Appendix B of *MASH*, soil strength was measured the day of the crash test. During installation of the guardrail for full-scale crash testing, two W6×16 posts were installed in the immediate vicinity of the MBGF in rocky terrain using the same fill materials and installation procedures used in the test installation and the previous standard dynamic test. Table K.1 in Appendix K.3 presents minimum soil strength properties established through the previous dynamic testing performed in accordance with *MASH* Appendix B.

As determined by the tests summarized in Appendix K.3, Table K.1, the minimum post loads required for deflections at 5 inches, 10 inches, and 15 inches, measured at a height of 25 inches, are 3940 lb, 5500 lb, and 6540 lb, respectively (90 percent of static load for the initial standard installation). On the day of the test, August 21, 2018, loads on the post at deflections of 5 inches, 10 inches, and 15 inches were 9900 lbf, 11,000 lbf, and 10,000+ lbf, respectively. Table K.2 in Appendix K.3 shows the strength of the backfill material in which the guardrail was installed met minimum *MASH* requirements.

12.3 *MASH* TEST 3-11 (CRASH TEST NO. 469468-12-1)

12.3.1 Test Designation and Actual Impact Conditions

MASH Test 3-11 involves a 2270P vehicle weighing 5000 lb ±110 lb impacting the CIP of the guardrail at an impact speed of 62 mi/h ±2.5 mi/h and an angle of 25° ±1.5°. Figure 12.3 shows the target CIP for *MASH* Test 3-11 on the round post guardrail in rocky terrain was 12.5 ft ±1 ft upstream of post 15 (i.e., post 13) using information in *MASH* section 2.3.2.

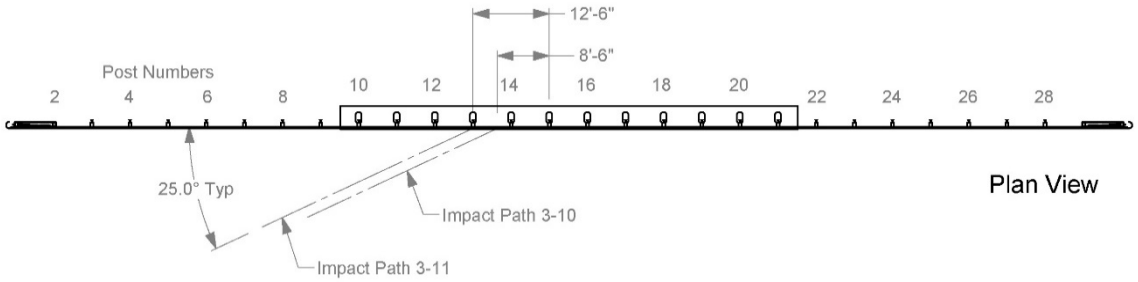

Figure 12.3. Target CIP for *MASH* TL-3 Tests on MBGF with Round Wood Posts in Rocky Terrain.

The 2013 RAM 1500 pickup truck used in the test weighed 5018 lb, and the actual impact speed and angle were 63.3 mi/h and 26.0°, respectively. The actual impact point was at 12.5 ft upstream of post 15 (i.e.at post 13). Minimum target IS was 106 kip-ft, and actual IS was 129 kip-ft.

12.3.2 Weather Conditions

The test was performed on the morning of August 21, 2018. Weather conditions at the time of testing were as follows: wind speed: 9 mi/h; wind direction: 243° (vehicle was traveling in a northwesterly direction); temperature: 88°F; relative humidity: 67 percent.

12.3.3 Test Vehicle

Figures 12.4 and 12.5 show the 2013 RAM 1500 pickup truck used for the crash test. The vehicle's test inertia weight was 5018 lb, and its gross static weight was 5018 lb. The height to the lower edge of the vehicle bumper was 11.75 inches, and the height to the upper edge of the bumper was 27.0 inches. The height to the vehicle's center of gravity was 28.8 inches. Tables K.3 and K.4 in Appendix K.4.1 give additional dimensions and information on the vehicle. The vehicle was directed into the installation using a cable reverse tow and guidance system, and was released to be freewheeling and unrestrained just prior to impact.



Figure 12.4. Round Post Guardrail/Test Vehicle Geometrics for Test No. 469468-12-1.



Figure 12.5. Test Vehicle before Test No. 469468-12-1.

12.3.4 Test Description

The test vehicle contacted the MBGF with round wood posts in rocky terrain 12.5 ft upstream of post 15 (i.e., at post 13) at a speed of 63.3 mi/h and an angle of 26.0°. Table 11.1 lists events that occurred during Test No. 469468-12-1. Figures K.1 and K.2 in Appendix K.4.2 present sequential photographs during the test.

For longitudinal barriers, it is desirable that the vehicle redirects and exits the barrier within the exit box criteria (not less than 32.8 ft downstream from loss of contact for cars and

pickups). The 2270P vehicle penetrated the guardrail and did not redirect and exit within the exit box criteria defined in *MASH*. After loss of contact with the barrier, the vehicle came to rest on the left (driver) side 80 ft downstream of the impact point and 6 ft toward the field side.

Table 12.1. Events during Test No. 469468-12-1.

TIME (s)	EVENTS
0.000	Left front corner of vehicle bumper contacts guardrail
0.002	Post 13 begins to deflect toward field side
0.017	Post 12 and 14 begin to deflect toward field side
0.031	Rail element begins to rise upward at post 15
0.034	Vehicle begins to redirect
0.036	Post 15 begins to rise upward and deflect toward field side
0.063	Left front bumper contacts post 13
0.066	Post 16 begins to deflect toward field side
0.070	Left front bumper contacts post 14
0.086	Left front tire begins to ride over post 14
0.100	Post 17 begins to deflect toward field side
0.130	Left front bumper contacts post 15
0.198	Left front bumper contacts post 16
0.215	Rear of vehicle contacts guardrail
0.257	Rail element begins to rupture
0.274	Rail element completely separated
0.295	Left front bumper contacts post 17
0.387	Left front bumper and rail element contact post 18
0.429	Vehicle becomes parallel with the barrier

12.3.5 Damage to Test Installation

Figures 12.6 and 12.7 show damage to the round post guardrail in rocky terrain. Post 1 was pulled downstream 0.9 inch at ground level. The rail element ruptured at post 16 and separated from the posts and blockouts from post 1 through post 23. Posts 10, 11, and 12 were deflected toward the field side 0.5 inch, 1.2 inches, and 3.5 inches, respectively. Post 13 was split and deflected toward the field side 5.5 inches. Posts 14 and 16 through 21 were fractured at ground level, and post 15 was pulled out of the ground. Post 14 was resting 48 ft toward the field side, and post 20 was resting 11 ft toward traffic lanes, with the remainder remaining near the installation. No movement was observed from post 24 through the end of the installation. The maximum dynamic deflection of the W-beam rail was 61.3 inches prior to its rupture.



Figure 12.6. MBGF with Round Wood Posts in Rocky Terrain after Test No. 469468-12-1.



Figure 12.7. Ruptured Guardrail after Test No. 469468-12-1.

12.3.6 Damage to Test Vehicle

Figure 12.8 shows the damage sustained by the vehicle. The front bumper, hood, grill, radiator and support, left front tire and rim, left front frame rail, left upper and lower A-arms, left front and rear doors, left rear cab corner, left exterior bed, and left rear tire and rim were damaged. Maximum exterior crush to the vehicle was 16.0 inches in the side plane at the left front corner at bumper height. No occupant compartment deformation occurred. Figure 12.9 shows the interior of the vehicle. Tables K.5 and K.6 in Appendix K.4.2 provide exterior crush and occupant compartment measurements.



Figure 12.8. Test Vehicle after Test No. 469468-12-1.

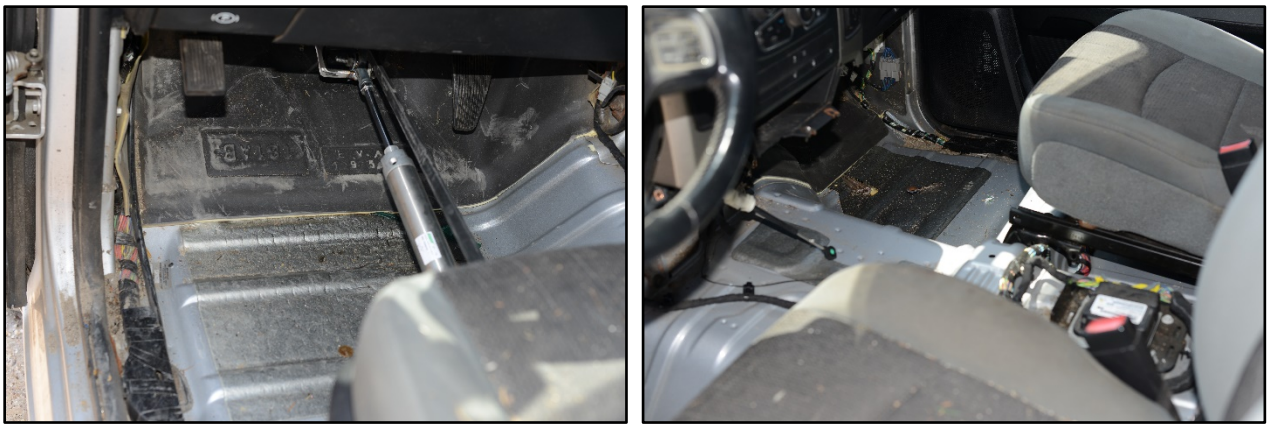

Before Test After Test

Figure 12.9. Interior of Test Vehicle for Test No. 469468-12-1.

12.3.7 Occupant Risk Factors

Data from the accelerometer, located at the vehicle center of gravity, were digitized for evaluation of occupant risk, and the results are shown in Table 12.2. Figure 12.10 summarizes these data and other pertinent information from the test. Figure K.3 in Appendix J.4.3 shows the vehicle angular displacements, and Figures K.4 through K.9 in Appendix K.4.4 show acceleration versus time traces.

12.3.8 Assessment of Test Results

Table 12.3 provides an assessment of the test based on the applicable safety evaluation criteria for *MASH* Test 3-11.

Table 12.2. Occupant Risk Factors for Test No. 469468-12-1.

Occupant Risk Factor	Value	Time
OIV		
Longitudinal	**15.1 ft/s**	at 0.1625 s on left side of interior
Lateral	**16.1 ft/s**	
Occupant Ridedown Accelerations		
Longitudinal	**7.2 g**	0.5431–0.5531 s
Lateral	**6.7 g**	0.2422–0.2522 s
THIV	**23.4 km/h** **6.5 m/s**	at 0.1564 s on left side of interior
PHD	**8.0 g**	0.5431–0.5531 s
ASI	**0.71**	0.1480–0.1980 s
Maximum 50-ms Moving Average		
Longitudinal	**−4.3 g**	0.1018–0.1518 s
Lateral	**5.4 g**	0.1336–0.1836 s
Vertical	**1.8 g**	3.1709–3.2209 s
Maximum Roll, Pitch, and Yaw Angles		
Roll	**98°**	3.5554 s
Pitch	**5°**	0.7748 s
Yaw	**161°**	3.3417 s



0.000 s



0.100 s



0.200 s



0.500 s

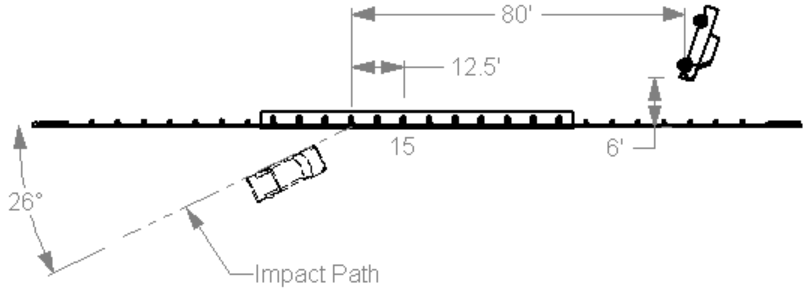

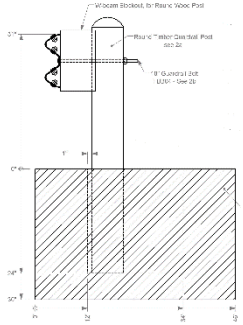

General Information
- Test Agency ..... Texas A&M Transportation Institute (TTI)
- Test Standard Test No. ..... *MASH* Test 3-11
- TTI Test No. 469468-12-1
- Test Date 2018-08-21

Test Article
- Type ..... Guardrail
- Name ..... MBGF with round posts in Rocky Terrain
- Installation Length ..... 181 ft 3 inches
- Material or Key Elements ... 31-inch tall W-beam guardrail on nominal 7-in diameter wood posts in simulated rocky terrain

Soil Type and Condition ..... 75-ft concrete beam with 12×22×24-inch deep leave-outs filled with cohesionless material, Dry

Test Vehicle
- Type/Designation 2270P
- Make and Model ..... 2013 RAM 1500 pickup truck
- Curb ..... 5030 lb
- Test Inertial ..... 5018 lb
- Dummy ..... No dummy
- Gross Static ..... 5018 lb

Impact Conditions
- Speed ..... 63.3 mi/h
- Angle ..... 26.0°
- Location/Orientation ..... 12.5 ft upstream of post 15

Impact Severity ..... 129 kip-ft

Exit Conditions
- Speed ..... NA
- Exit Trajectory ..... Behind Rail
- Heading Angle ..... Behind Rail

Occupant Risk Values
- Longitudinal OIV ..... 15.1 ft/s
- Lateral OIV ..... 16.1 ft/s
- Longitudinal Ridedown ..... 7.2 g
- Lateral Ridedown ..... 6.7 g
- THIV ..... 23.4 km/h
- PHD ..... 8.0 g
- ASI 0.71

Max. 0.050-s Average
- Longitudinal ..... -4.3 g
- Lateral ..... 5.4 g
- Vertical ..... 1.8 g

Post-Impact Trajectory
- Stopping Distance ..... 80 ft downstream 6 ft toward field

Vehicle Stability
- Maximum Yaw Angle ..... 161°
- Maximum Pitch Angle ..... 5°
- Maximum Roll Angle ..... 98°
- Vehicle Snagging ..... No
- Vehicle Pocketing ..... No

Test Article Deflections
- Dynamic ..... Ruptured
- Permanent ..... Ruptured
- Working Width ..... Ruptured
- Vehicle Intrusion ..... Ruptured

Vehicle Damage
- VDS ..... 11LFQ4 & 11L&T2
- CDC 11FLEO3
- Max. Exterior Deformation ..... 16.0 inches
- OCDI LF0020000
- Max. Occupant Compartment Deformation ..... None

Figure 12.10. Summary of Results for *MASH* Test 3-11 on MBGF with Round Wood Posts in Rocky Terrain.

Table 12.3. Performance Evaluation Summary for *MASH* Test 3-11 on MBGF with Round Wood Posts in Rocky Terrain.

Test Agency: Texas A&M Transportation Institute Test No.: 469468-12-1 Test Date: 2018-08-21

***MASH* Test 3-11 Evaluation Criteria**	**Test Results**	**Assessment**
Structural Adequacy		
A. Test article should contain and redirect the vehicle or bring the vehicle to a controlled stop; the vehicle should not penetrate, underride, or override the installation although controlled lateral deflection of the test article is acceptable	The MBGF with round wood posts in rocky terrain began to redirect the 2270P vehicle; however, the rail element ruptured and allowed the vehicle to penetrate the installation.	Fail
Occupant Risk		
D. Detached elements, fragments, or other debris from the test article should not penetrate or show potential for penetrating the occupant compartment, or present an undue hazard to other traffic, pedestrians, or personnel in a work zone. *Deformations of, or intrusions into, the occupant compartment should not exceed limits set forth in Section 5.3 and Appendix E of MASH.*	Post and blockout fragments were present but did not penetrate or show potential for penetrating the occupant compartment, or to present undue hazard to others in the area. No occupant compartment deformation occurred.	Pass
F. The vehicle should remain upright during and after collision. The maximum roll and pitch angles are not to exceed 75 degrees.	The 2270P vehicle rolled 90° onto its left side.	Fail
H. Longitudinal and lateral occupant impact velocities should fall below the preferred value of 30 ft/s, or at least below the maximum allowable value of 40 ft/s.	Longitudinal OIV was 15.1 ft/s, and lateral OIV was 16.1 ft/s.	Pass
I. Longitudinal and lateral occupant ridedown accelerations should fall below the preferred value of 15.0 gs, or at least below the maximum allowable value of 20.49 gs.	Maximum longitudinal occupant ridedown acceleration was 7.2 g, and maximum lateral occupant ridedown acceleration was 6.7 g.	Pass
Vehicle Trajectory		
For redirective devices, it is preferable that the vehicle be smoothly redirected and leave the barrier within the exit box criteria (not less than 32.8 ft for the 1100C and 2270P vehicles) and should be documented.	The 2270P vehicle penetrated the guardrail and did not redirect and exit within the exit box criteria defined in *MASH*.	Documentation only

12.4 CONCLUSIONS

The MBGF with round wood posts in rocky terrain began to redirect the 2270P vehicle; however, the rail element ruptured and allowed the vehicle to penetrate the installation. Post and blockout fragments were present but did not penetrate or show potential for penetrating the occupant compartment, or to present undue hazard to others in the area. No occupant compartment deformation occurred. The 2270P vehicle rolled 90° onto its left (driver) side. Occupant risk factors were with the preferred limits specified in *MASH*. The 2270P vehicle penetrated the guardrail and did not redirect and exit within the exit box criteria defined in *MASH*.

Table 12.3 shows the MBGF with round wood posts in rocky terrain did not perform acceptably for *MASH* Test 3-11 due to rupture of the rail element and subsequent roll over of the vehicle.

CHAPTER 13:
SUMMARY AND CONCLUSIONS

A *MASH* implementation agreement was jointly developed and adopted by FHWA and AASHTO. It establishes various implementation dates for different categories of roadside safety features. In response to the implementation requirements, TxDOT Bridge, Design, Maintenance, and Traffic Operations Divisions reviewed their standards for roadside safety devices and identified those devices that require testing and evaluation to assess *MASH* compliance. These systems are being crash tested in accordance with *MASH* criteria in three phases over a three-year period.

This report documents the Phase II testing and evaluation effort. Test results and assessment of *MASH* compliance for each device are summarized below.

13.1 TXDOT C402 BRIDGE RAIL

The 1100C vehicle was contained and redirected. The hood of the vehicle was pushed into the windshield, which shattered, but did not penetrate or create excessive deformation into the occupant compartment. Maximum occupant compartment deformation was 2.5 inches in the driver side floor pan and firewall areas. The 1100C vehicle remained upright during and after the collision event. Occupant risk factors were within allowable limits.

The TxDOT C402 bridge rail contained and redirected the 2270P vehicle. The hood of the vehicle was pushed into the windshield, which shattered, but did not penetrate or create excessive deformation into the occupant compartment. Maximum reduction of space in the occupant compartment was 1.0 inch in the driver side floor pan and kick panel areas. The 2270P vehicle remained upright during and after the test. Occupant risk factors were within the preferred limits.

The single-unit truck was successfully contained and redirected. The vehicle remained stable and upright as it came to a stop. Some cracking was observed in the deck and parapet upstream of the expansion joint.

The TxDOT C402 bridge rail performed acceptably according to *MASH* TL-4 evaluation criteria.

13.2 TXDOT C412 BRIDGE RAIL

The tractor-trailer was contained and redirected. The trailer rolled on top of the bridge rail and rode along the top until it exited the end of the installation. The trailer disconnected from the tractor and the trailer rolled onto its side after exiting the installation. The trailer roll began to recover from its maximum prior to exiting the system.

The TxDOT C412 bridge rail performed acceptably according to *MASH* Test 5-12 evaluation criteria.

13.3 TXDOT C411 BRIDGE RAIL

The TxDOT C411 bridge rail contained and redirected the 1100C vehicle. The vehicle did not penetrate, underride, or override the installation. No dynamic deflection or permanent deformation was observed. No detached elements, fragments, or other debris were present to penetrate or show potential for penetrating the occupant compartment, or to present hazard to others in the area. Maximum occupant compartment deformation was 4.0 inches in the right firewall area. The 1100C vehicle remained upright during and after the collision event. Maximum roll and pitch angles were 26° and 13°, respectively. Occupant risk factors were within the allowable limits specified in *MASH*. The 1100C vehicle exited within the exit box criteria.

The TxDOT C411 contained and redirected the 2270P vehicle. The vehicle did not penetrate, underride, or override the installation. No measurable dynamic deflection or permanent deformation was observed. No detached elements, fragments, or other debris were present to penetrate or show potential for penetrating the occupant compartment, or to present hazard to others in the area. Maximum occupant compartment deformation was 4.0 inches in the right firewall area. The 2270P vehicle remained upright during and after the collision event. Maximum roll and pitch angles were 7° and 3°, respectively. Occupant risk factors were within the preferred limits specified in *MASH*. The 2270P vehicle exited within the exit box criteria.

The TxDOT C411 bridge rail performed acceptably according to *MASH* TL-2 evaluation criteria.

13.4 TXDOT T1W BRIDGE RAIL

The TxDOT T1W bridge rail contained and redirected the 1100C vehicle. The vehicle did not penetrate, underride, or override the installation. Maximum dynamic deflection during the test was 1.1 inches. No detached elements, fragments, or other debris were present to penetrate or show potential for penetrating the occupant compartment, or to present hazard to others in the area. Maximum occupant compartment deformation was 3.5 inches in the left firewall area. The 1100C vehicle remained upright during and after the collision event. Maximum roll and pitch angles were 12° and 4°, respectively. Occupant risk factors were within the allowable limits specified in *MASH*. The 1100C vehicle exited within the exit box criteria.

The TxDOT T1W contained and redirected the 2270P vehicle. The vehicle did not penetrate, underride, or override the installation. Maximum dynamic deflection during the test was 13.0 inches, and maximum deformation was 3.0 inches. No detached elements, fragments, or other debris were present to penetrate or show potential for penetrating the occupant compartment, or to present hazard to others in the area. Maximum occupant compartment deformation was 3.0 inches in the left firewall area. The 2270P vehicle remained upright during and after the collision event. Maximum roll and pitch angles were 15° and 4°, respectively. Occupant risk factors were within the preferred limits specified in *MASH*. The 2270P vehicle exited within the exit box criteria.

The TxDOT T1W bridge rail performed acceptably according to *MASH* TL-3 evaluation criteria.

13.5 ROUND WOOD POST W-BEAM GUARDRAIL

The round wood post w-beam guardrail did not contain or redirect the 2270P vehicle. The vehicle overrode the installation. Maximum dynamic deflection prior to override of the installation was 57.4 inches. Post and blockout fragments were present but did not penetrate or show potential for penetrating the occupant compartment, or to present undue hazard to others in the area. Maximum occupant compartment deformation as 5.0 inches in the right front floor pan area. The 2270P vehicle rolled 3.5 revolutions after overriding the installation. Occupant risk factors were within the allowable limits specified in *MASH*. The 2270P vehicle did not redirect and exit within the exit box criteria.

Due to override of the installation and subsequent rollover of the 2270P vehicle, the round wood post w-beam guardrail did not perform acceptably for *MASH* Test 3-11.

13.6 TXDOT 42-INCH SINGLE SLOPE CONCRETE MEDIAN BARRIER WITH LIGHT POLE

The TxDOT 42-inch single slope concrete median barrier with light pole contained and redirected the 10000S vehicle. The vehicle did not penetrate, underride, or override the installation. Maximum dynamic deflection during the test was not obtainable due to vehicle obstruction of view. No detached elements, fragments, or other debris from the test article were present to penetrate or show potential for penetrating the occupant compartment or to present hazard to others in the area. The 10000S vehicle remained upright during and after the collision event. Maximum roll was 30°. The 10000S vehicle exited within the exit box criteria.

The TxDOT 42-inch single slope concrete median barrier with light pole performed acceptably for *MASH* Test 4-12.

13.7 SKID-MOUNTED SINGLE-POST PERFORATED STEEL TUBE TEMPORARY SIGN SUPPORT

During *MASH* Test 3-72 at 0°, the sleeve of the skid-mounted single perforated steel tube temporary sign support system readily released from its skid upon impact upon impact by the 2270P vehicle. The released sign panel and support post did not penetrate or show potential for penetrating the occupant compartment, or to present undue hazard to others in the area. The windshield was cracked, but no hole, tear, or measurable deformation was observed. No other occupant compartment deformation was observed. The sign panel and support post briefly slapped the windshield but would not block the driver’s vision enough to cause loss of control of the vehicle. The 2270P vehicle remained upright during and after the collision event. The 2270P vehicle came to rest 272 ft behind the point of impact with the device.

During *MASH* Test 3-72 at 90°, the sleeve and support post of the skid-mounted single perforated steel tube temporary sign support system yielded to the 2270P vehicle upon impact. The detached sign panel and upright support did not penetrate the occupant compartment. The debris did not present undue hazard to others in the area. The windshield was cracked, but no hole, tear, or measurable deformation was observed. No other occupant compartment deformation was observed. The sign panel and support would not block the driver’s vision enough to cause loss of control of the vehicle. The 2270P vehicle remained upright during and

after the collision event. The 2270P vehicle came to rest 220 ft behind the point of impact with the device.

The skid-mounted single perforated steel tube temporary sign support system performed acceptably for *MASH* Test 3-72 criteria.

13.8 MAILBOXES

13.8.1 Single Mailbox – Recycled Rubber Support Post – Type 4 Foundation

The single mailbox with recycled rubber support post in Type 4 foundation readily released from the socket upon impact by the 1100C vehicle. The mailbox and support did not penetrate or show potential for penetrating the occupant compartment, or to present undue hazard to others in the area. The windshield was cracked, but no hole, tear, or measurable deformation was observed. No other occupant compartment deformation was observed. The 1100C vehicle remained upright during and after the collision event. No occupant contact occurred in either the longitudinal or lateral directions. The 1100C vehicle came to rest 366 ft behind the original location of the test article. The single mailbox with recycled rubber support post in Type 4 foundation performed acceptably for *MASH* Test 3-61.

13.8.2 Double Mailbox – Thin-Wall Galvanized Pipe Support – Type 4 Foundation

The double mailbox with thin-wall galvanized support pipe in Type 4 foundation deformed around the front of the vehicle and released out of the socket. The mailbox and support did not penetrate or show potential for penetrating the occupant compartment, or to present undue hazard to others in the area. No windshield contact or occupant compartment deformation was observed. The 1100C vehicle remained upright during and after the collision event. Occupant risk factors were within the preferred limits specified in *MASH*. The 1100C vehicle came to rest 306 ft behind the original location of the test article. The double mailbox with thin-wall galvanized pipe support in Type 4 foundation performed acceptably for *MASH* Test 3-61.

13.8.3 Multiple Mailboxes – Multi-Mount Support – Type 4 Foundation

The multiple mailboxes with multi-mount support in Type 4 foundation readily released out of the socket upon impact by the 1100C vehicle. The mailboxes and support did not penetrate or show potential for penetrating the occupant compartment, or to present undue hazard to others in the area. The windshield was cracked, and there was 1.8 inches of deformation inward toward the occupant compartment. No tear or hole was observed in the windshield. No other occupant compartment deformation was observed. The 1100C vehicle remained upright during and after the collision event. Occupant risk factors were within the preferred limits specified in *MASH*. The 1100C vehicle came to rest 302 ft behind and 10 ft to the left of the original location of the test article. The multiple mailboxes with multi-mount support in Type 4 foundation performed acceptably for *MASH* Test 3-61.

13.8.4 Single Molded Plastic Mailmaster® Mailbox – Wood Support Post– Type 5 Foundation

The single molded plastic Mailmaster® mailbox with wood support post in Type 5 foundation fractured slightly below ground upon impact by the 1100C vehicle. The mailbox and support did not penetrate or show potential for penetrating the occupant compartment, or to present undue hazard to others in the area. The windshield was cracked, and maximum deformation was 1.9 inches. No tear or hole was observed in the windshield. Occupant risk factors were within the preferred limits specified in *MASH*. The 1100C vehicle remained upright during and after the collision event. The 1100C vehicle came to rest 288 ft behind the original location of the test article. The single molded plastic Mailmaster® mailbox with wood support post (Type 5 foundation) performed acceptably for *MASH* Test 3-61.

13.9 Skid-Mounted Dual Wood Post Temporary Sign Support System

The supports of the skid-mounted dual wood post temporary sign support system fractured upon impact by the 2270P vehicle. The detached sign panel and support segments did not penetrate the occupant compartment. The debris did not present undue hazard to others in the area. The windshield was cracked, but no hole, tear, or measurable deformation was observed. No other occupant compartment deformation was observed. The sign panel and supports would not block the driver's vision enough to cause loss of control of the vehicle. The 2270P vehicle remained upright during and after the collision event. The 2270P vehicle came to rest 248 ft behind the original location of the test article. The skid-mounted dual wood post temporary sign support system met all applicable criteria for *MASH* Test 3-72 at 90°.

13.10 MBGF WITH W6×8.5 STEEL POSTS IN ROCKY TERRAIN

The MBGF with W6×8.5 steel posts in rocky terrain contained and redirected the 1100C vehicle. The vehicle did not penetrate, underride, or override the installation. Maximum dynamic deflection during the test was 40.5 inches. Post and blockout fragments were present but did not penetrate or show potential for penetrating the occupant compartment, or to present undue hazard to others in the area. No occupant compartment deformation or intrusion occurred. The 1100C vehicle remained upright during and after the collision event. Maximum roll and pitch angles were 15° and 10°, respectively. Occupant risk factors were within the preferred limits specified in *MASH*. The 1100C vehicle exited within the exit box criteria.

The MBGF with W6×8.5 steel posts in rocky terrain contained and redirected the 2270P vehicle. The vehicle did not penetrate, underride, or override the installation. Maximum dynamic deflection during the test was 74.8 inches. Post and blockout fragments were present but did not penetrate or show potential for penetrating the occupant compartment, or to present undue hazard to others in the area. No occupant compartment deformation or intrusion occurred. The 2270P vehicle remained upright during and after the collision event. Maximum roll and pitch angles were 8° and 16°, respectively. Occupant risk factors were within the preferred limits specified in *MASH*. The 2270P vehicle exited within the exit box criteria.

The MBGF with W6×8.5 steel posts in rocky terrain performed acceptably for *MASH* TL-3 criteria.

13.11 MBGF WITH ROUND WOOD POSTS IN ROCKY TERRAIN

The MBGF with round wood posts in rocky terrain began to redirect the 2270P vehicle; however, the rail element ruptured and allowed the vehicle to penetrate the installation. Post and blockout fragments were present but did not penetrate or show potential for penetrating the occupant compartment, or to present undue hazard to others in the area. No occupant compartment deformation or intrusion occurred. The 2270P vehicle rolled 90° onto its left side. Occupant risk factors were within the preferred limits specified in *MASH*. The 2270P vehicle exited within the exit box criteria.

The MBGF with round posts in rocky terrain did not perform acceptably for *MASH* Test 3-11 due to rupture of the rail element and subsequent roll over of the vehicle.

CHAPTER 14: IMPLEMENTATION*

A total of 19 full-scale crash tests were performed under Phase II of this project to evaluate 14 different roadside safety devices or configurations. These tests represent the critical tests considered necessary to demonstrate *MASH* compliance of each device. Therefore, systems that met *MASH* requirements for the critical test conditions are considered *MASH* compliant and suitable for continued implementation beyond the *MASH* implementation deadline.

TxDOT standards include multiple configurations or variations for many of these devices to accommodate different design considerations. In such instances, the critical or worst-case configuration was selected and tested. If the critical configuration met *MASH* requirements, other less critical configurations of the device are also considered *MASH* compliant. The implementation recommendations for each system tested and evaluated in accordance with *MASH* are described in the sections below.

14.1 TXDOT C402 BRIDGE RAIL

The T402 bridge rail consists of a tubular steel rail attached to fabricated steel posts mounted to a 24-inch tall concrete parapet. The only difference between the T402 and C402 rail is that the C402 incorporates a nominal 2-inch diameter steel pipe attached to the traffic face of the steel posts between the concrete parapet and tubular rail element to meet pedestrian code requirements.

TTI researchers consider the C402 bridge rail a more critical configuration than the T402 bridge rail. The 24-inch height of the concrete parapet is above the bumper height of a passenger car and captures most of the pickup truck bumper. Therefore, although some sheet metal contact will occur, substantial snagging of vehicle components on the steel posts was not a significant concern. Testing the C402 bridge rail evaluated the attachment of the pedestrian pipe rail to the posts and the splices between the pipe sections to determine if there is any separation and interaction with the impacting vehicle. If this more critical configuration meets *MASH* requirements, the less critical T402 bridge rail would also be considered *MASH* compliant.

The C402 bridge rail was crash tested with the elliptical tubular steel rail option. The elliptical tubular steel rail is considered more critical than the rectangular tube option because of its narrower contact surface area.

The full *MASH* test matrix was successfully performed on the C402 bridge rail system. The full-scale crash tests consisted of test designations 4-10 (small passenger car), 4-11 (pickup truck), and 4-12 (single unit truck). Therefore, the C402 and T402 bridge rail systems with both elliptical and rectangular tube rail options are considered *MASH* TL-4 compliant. Implementation of these bridge rail systems can be achieved by the Bridge Division through revision of their respective standard sheets as necessary to reflect the details presented in Appendix A.1.

* The opinions/interpretations identified/expressed in this chapter are outside the scope of TTI Proving Ground's A2LA Accreditation.

14.2 TXDOT C412 BRIDGE RAIL

The TxDOT C412 bridge rail is an aesthetic concrete combination rail with cast-in-place windows designed to accommodate both vehicle and pedestrian traffic. Previously, it was successfully tested to *NCHRP Report 350* TL-4 under the name F411 (*2*). TxDOT made changes to the reinforcement in the C412 rail to provide structural adequacy for *MASH* TL-5.

When tested in accordance with *MASH* Test 5-12 with an 80,000-lb tractor-van trailer, the C412 bridge rail met all required *MASH* criteria. Because a variation of the C412 bridge rail with similar geometry was successfully tested to *MASH* TL-4 (*3*), test designations 5-10 and 5-11 were deemed unnecessary.

Consequently, the C412 bridge rail is considered *MASH* TL-5 compliant. Implementation of the C412 bridge rail can be achieved by the Bridge Division through development of a revised standard sheet based on details presented in Appendix B.1.

14.3 TXDOT C411 BRIDGE RAIL

The T411 bridge rail, also known as the Texas Classic Rail, is an aesthetic concrete rail with cast-in-place windows and pilasters. It has an overall height of 32 inches with 18-inch tall windows. The C411 bridge rail is a 42-inch tall version of the T411 rail that meets pedestrian code requirements and accommodates both vehicle and pedestrian traffic. The windows in the C411 bridge rail are 24 inches tall, thus making it the more critical of the two bridge rail systems. The taller 24-inch windows are more critical from a vehicle interaction and snagging standpoint, and the overall 42-inch rail height is more critical from an occupant interaction standpoint.

The full *MASH* test matrix was successfully performed on the C411 bridge rail system. The full-scale crash tests included *MASH* test designations 2-10 (small passenger car) and 2-11 (pickup truck). Therefore, both the C411 and the less critical T411 are considered *MASH* TL-2 compliant. Continued implementation of these bridge rail systems can be achieved by the Bridge Division through revision of their respective standard sheets as necessary to reflect the details presented in Appendix C.1.

14.4 TXDOT T1W BRIDGE RAIL

The TxDOT T1W bridge rail is a variation of a rail initially developed by the Wyoming Department of Transportation (WYDOT). The bridge rail is a 32-inch tall rail that consists of two rectangular tubular steel rail elements attached to fabricated steel posts mounted on a 9-inch tall concrete curb.

The full *MASH* TL-3 test matrix was successfully performed on the T1W rail system. The full-scale crash tests included *MASH* test designations 3-10 (small passenger car) and 3-11 (pickup truck). Therefore, the T1W bridge rail is considered *MASH* TL-3 compliant. Continued implementation of this bridge rail system can be achieved by the Bridge Division through revision of their respective standard sheets as necessary to reflect the details presented in Appendix D.1.

14.5 ROUND WOOD POST W-BEAM GUARDRAIL

Details of TxDOT W-beam guardrail or MBGF is provided on standard GF(31)-14. TxDOT uses a Midwest guardrail system (MGS) with 8-inch deep offset blocks between the posts and W-beam rail. The MGS system has a mounting height of 31 inches to the top of the W-beam and rail splices located midspan between support posts. Three different post types can be used in the TxDOT W-beam guardrail system: a W6×8.5 steel post, a nominal 6-inch × 8-inch rectangular wood post, and a round wood post with a minimum 7-inch diameter.

The steel and rectangular wood post variations of the MGS have been successfully tested to *MASH* criteria in a variety of configurations (*4, 5, 6*). The primary consideration for the evaluation of the W-beam guardrail with round wood posts is structural adequacy. The rectangular wood post that has been successfully tested has a greater section modulus than the nominal 7-inch diameter round wood post used by TxDOT. Thus, *MASH* Test 3-11 with the pickup truck was considered the critical test.

Due to override of the installation and subsequent rollover of the 2270P vehicle, the W-beam guardrail with round wood posts did not perform acceptably for *MASH* Test 3-11. Thus, the current TxDOT W-beam guardrail with round wood post does not meet *MASH* criteria. Further research is required to develop a modification to this system that will comply with *MASH* requirements. Options for future consideration include decreasing the post embedment depth and/or increasing the size (diameter) of the post to delay post fracture and permit more energy of the vehicle to be dissipated through post deflection.

14.6 TXDOT 42-INCH SINGLE SLOPE CONCRETE MEDIAN BARRIER WITH LIGHT POLE

Light poles are sometimes attached to concrete median barrier to provide desired roadway illumination. TxDOT has a standard detail sheet for this practice for both a 32-inch concrete F-shape median barrier (CSB(4)-10) and a 42-inch single slope median barrier (SSCB(4)-10).

The 32-inch F-shape barrier does not meet the minimum 36-inch height requirement for a *MASH* TL-4 barrier; therefore, it would only be suitable to test this system to *MASH* TL-3. The 42-inch single slope barrier accommodates *MASH* TL-4 when proper anchorage or lateral support is provided to the barrier.

MASH Test 4-12 on a 42-inch single slope concrete median barrier with light pole was considered more critical configuration for evaluating the structural adequacy of the median barrier mounted light pole. It is desirable for the tall light pole to maintain structural integrity and not collapse, bend, or otherwise release from the barrier and fall across oncoming traffic. *MASH* Tests 4-11 and 4-10 were not considered necessary because the single slope profile is considered a crashworthy shape and the test vehicles should not engage the barrier-mounted light pole on the 42-inch tall barrier.

The TxDOT 42-inch single slope concrete median barrier with light pole performed acceptably for *MASH* Test 4-12. Therefore, the TxDOT 42-inch single slope concrete median barrier with light pole is considered *MASH* TL-4 compliant. Continued implementation of light poles on the 42-inch single slope concrete median barrier can be achieved by the Design

Division and Traffic Operations Division through revision of their respective standard sheets as necessary to reflect the details presented in Appendix F.1.

14.7 SKID-MOUNTED SINGLE-POST PERFORATED STEEL TUBE TEMPORARY SIGN SUPPORT

The skid-mounted single perforated steel tube temporary sign support system is designed for use with a 9 sq. ft lightweight, extruded, hollow-core plastic sign substrate. Details can be found on TxDOT Barricade and Construction sheet BC(5)-14. The single support system was considered acceptable based on the original development and testing of a similar dual post system under *NCHRP Report 350* at both 0° and 90°, which is a requirement of a free-standing work zone traffic control device (*10*).

Although the small passenger car has changed under *MASH*, its performance in frontal impacts with large, skid-mounted, breakaway sign support systems is not expected to differ appreciably. Therefore, only test designation 3-72 with the 2270P pickup truck in both the 0° and 90° impact orientations was considered necessary to assess *MASH* compliance.

The skid-mounted single perforated steel tube temporary sign support system successfully met criteria for *MASH* Test 3-72 at 0° and 90°. Therefore, the skid-mounted single perforated steel tube temporary sign support system is considered *MASH* compliant when configured with a lightweight, hollow-core plastic sign substrate. Continued implementation of skid-mounted single perforated steel tube temporary sign support system can be achieved by the Traffic Operations Division through revision of their respective standard sheets as necessary to reflect the details presented in Figure 8.1.

14.8 MAILBOXES

The small passenger car is considered the critical design vehicle for evaluation of mailbox support systems based on the mounting height regulated for mailboxes by the United States Postal Service. At the required mounting height, any interaction between the mailbox and the windshield of the pickup truck design vehicle is improbable. The taller hood height and longer wrap-around distance (i.e., the distance from the ground, around the front end, and across the hood to the base of the windshield) of the 2270P pickup truck significantly decreases the probability of windshield impact and occupant compartment intrusion. Therefore, Test 3-62 with the pickup truck was considered unnecessary for the *MASH* evaluation of the TxDOT mailbox systems.

The *MASH* test matrix for breakaway supports includes two tests with the 1100C small passenger car: a low-speed test at 19 mi/h (Test 3-60) and a high-speed test at 62 mi/h (Test 3-61). In the low speed small car test, *MASH* testing has shown that the mailbox support assembly will be pushed forward by the impacting vehicle (*12*). Under the lower impact severity, it is unlikely that the mailbox will separate from the support or that the support assembly will interact with the vehicle windshield.

The most critical test for evaluation of mailbox systems is *MASH* test designation 3-61. This test evaluates both the structural adequacy of the mailbox connection hardware and the

interaction of the mailbox support assembly with the vehicle windshield. If the mailbox remains attached during this high-speed test, it is not expected to detach in the low-speed test.

Four different mailbox support systems were selected for *MASH* testing and evaluation during Phase II of the project. Separate tests were successfully performed for each system. These include: a single mailbox system on a recycled rubber post with Type 4 foundation, a double mailbox system on a thin-walled galvanized tube support with Type 4 foundation, a multiple mailbox system on semi-circular, thin-walled galvanized tube support with Type 4 foundation, and a two-piece molded plastic mailbox assembly attached to a nominal 4×4 wood support (Type 5 foundation).

Each of these systems are considered *MASH* compliant and suitable for continued implementation. Systems that were tested with a single mailbox should be implemented with a single mailbox only. Systems that were tested with a double mailbox are considered *MASH* compliant for both single and dual mailbox configurations.

TxDOT standard MB-15(1) does not permit the use of large mailboxes on the outside positions of the multiple mailbox mount. Therefore, the multiple mailbox mount in Type 4 foundation system was tested with two medium mailboxes in the outer mounting positions and two large mailboxes in the inner mounting positions. This is considered the most critical permissible configuration. Other less critical combinations of small and medium mailboxes are considered less critical and, therefore, *MASH* compliant based on the successful testing of the critical configuration. Implementation of the mailbox systems can be achieved by the Maintenance Division through updating of mailbox standard MB-15(1) (as necessary) to reflect the details presented in Chapter 9.

14.9 SKID-MOUNTED DUAL WOOD POST TEMPORARY SIGN SUPPORT SYSTEM

The skid-mounted dual wood post temporary sign support system uses dual 4-inch × 4-inch posts and is designed for use with a maximum 21 sq. ft sign panel. Details can be found on TxDOT Barricade and Construction sheet BC(5)-14.

The *MASH* test matrix for work zone traffic control devices includes a high-speed test with a passenger car (Test 3-71) and pickup truck (Test 3-72) at both 0° and 90° impact orientations. The skid-mounted dual wood post temporary sign support system was previously tested with a small passenger car at high speed under NCHRP Report 350 (*13*). Although the small passenger car design test vehicle has changed under *MASH*, its performance in frontal impacts with large skid-mounted sign support systems is not expected to differ appreciably.

A pickup truck test was performed on the skid-mounted dual wood post temporary sign support system with 5-ft mounting height at 0° under NCHRP Report 350 (*14*). TxDOT currently specifies a 7-ft mounting height, which is considered less critical for the pickup truck impact. Although the pickup truck design test vehicle has changed under *MASH*, review of the previous pickup truck test at the lower mounting height indicates that the impact performance of the skid-mounted dual wood post temporary sign support system at 7-ft mounting height with the *MASH* 2270P pickup truck at 0° should be acceptable. Therefore, only *MASH* Test 3-72 at 90° was considered necessary to assess *MASH* compliance.

The skid-mounted dual wood post temporary sign support system successfully met criteria for *MASH* Test 3-72 at 90°. Therefore, the skid-mounted dual wood post temporary sign support system is considered *MASH* compliant. Continued implementation of skid-mounted single perforated steel tube temporary sign support system can be achieved by the Traffic Operations Division through revision of their respective standard sheets as necessary to reflect the details presented in Figure 10.1.

14.10 MBGF WITH STEEL POSTS IN ROCKY TERRAIN

Guidance for installing the TxDOT MBGF in rocky terrain is found in general note 9 on metal beam guard fence standard GF(31)-14. The guidance varies depending on the depth at which rock is encountered. The most critical condition is when rock is encountered at or near the ground surface. When this occurs, the recommendation is to drill a 22-inch diameter hole (or two overlapping 12-inch diameter holes) to a depth of 24 inches into the rock. Any excess post length is cut, and the hole is backfilled with a cohesionless material.

The configuration evaluated incorporated W6×8.5 steel posts in the rocky terrain. The rocky terrain was simulated using an at-grade, cast-in-place, concrete foundation beam with precast voids. The full *MASH* TL-3 test matrix for longitudinal barriers was successfully performed on the MBGF with W6×8.5 steel posts in the rocky terrain. The full-scale crash tests included *MASH* test designations 3-10 (small passenger car) and 3-11 (pickup truck). Therefore, the MBGF with W6×8.5 steel posts in the rocky terrain is considered *MASH* TL-3 compliant.

14.11 MBGF WITH ROUND WOOD POSTS IN ROCKY TERRAIN

The MBGF with W6×8.5 steel posts in the rocky terrain was successfully tested as described in Chapter 11 and summarized above. *MASH* Test 3-11 of the TxDOT MBGF with round wood posts was unsuccessful as detailed in Chapter 6 of this report. In this test, several of the wood posts fractured and the vehicle overrode the guardrail installation. Based on this result, it was recommended that the guardrail in rocky terrain be further evaluated with round wood posts.

The primary consideration for the evaluation of the W-beam guardrail with round wood posts is structural adequacy. Therefore, *MASH* Test 3-11 with the pickup truck was considered the critical test. The impact performance with the passenger car should be acceptable based on the reduced snagging severity associated with the geometry of the round post compared to the steel post that was successfully tested.

The MBGF with round wood posts in the rocky terrain did not perform acceptably for *MASH* Test 3-11 due to rupture of the rail element and subsequent roll over of the vehicle. Thus, the current TxDOT MBGF with round wood posts in the rocky terrain does not meet *MASH* criteria. Further research is required to develop a modification to this system that will comply with *MASH* requirements.

Several of the round wood posts that fractured during the impact did so against the side of the oval-shaped void. A larger diameter hole would permit more longitudinal movement of the post prior to contact with the rock, and that additional movement could reduce the probability of

post fracture. Reducing the number of fractured posts would help reduce rail pocketing and decrease the probability of rail rupture.

The current standard allows two types of treatment when rock is encountered: an oval void (constructed from two overlapping 12-inch diameter holes), and a single, larger 22-inch diameter hole. Initial inquiries with local contractors indicated that coring a single larger diameter hole is more cost effective than drilling two overlapping smaller diameter holes to create an oval-shaped void. Thus, if this modification is pursued in future research, it appears it would not adversely affect the cost of installing guardrail in rocky terrain. In fact, a single, larger diameter hole would apparently be the preferred option of contractors.

REFERENCES

1. AASHTO. *Manual for Assessing Roadside Safety Hardware.* Second Edition, 2016, American Association of State Highway and Transportation Officials: Washington, D.C.

2. D.L. Bullard, Jr., W.F. Williams, W. L. Menges, and R.R. Haug, *Design and Evaluation of the TxDOT F411 and T77 Aesthetic Bridge Rails*, Report No. 4288-1, Texas A&M Transportation Institute, College Station, TX, October 2002.

3. W.F. Williams, W.L. Menges, and D.L. Kuhn, *MASH* TL-4 Evaluation of the Pulaski Skyway Bridge Parapet, Report No. 607451-1-3, Texas A&M Transportation Institute, College Station, TX, March 2017.

4. K.D. Schrum, K.A. Lechtenberg, R.W. Bielenberg, S.K. Rosenbaugh, R.K. Faller, J.D. Reid, and D.L. Sicking, *Safety Performance Evaluation of the Non-Blocked Midwest Guardrail System (MGS)*, Report No. TRP-03-262-12, Midwest Roadside Safety Facility, Lincoln, NE, January 2013.

5. R.P. Bligh, A.Y. Abu-Odeh, and W.L. Menges, *MASH Test 3-10 on the 31-inch W-Beam Guardrail with Standard Offset Blocks*, Report No. 9-1002-4, Texas A&M Transportation Institute, College Station, TX, March 2011.

6. D.A. Gutierrez, K.A. Lechtenberg, R.W. Bielenberg, R.K. Faller, J.D., Reid, and D.L. Sicking, *Midwest Guardrail System (MGS) with Southern Yellow Pine Posts*, Report No. TRP-03-272-13. Midwest Roadside Safety Facility, Lincoln, NE, September 2013.

7. R.P. Bligh and D.L. Bullard, *Crash Testing and Evaluation of Round, Wood Post, W-Beam Guardrail System*, Report No. 405391, Texas A&M Transportation Institute, College Station, TX, October 1995.

8. Nicol, D.A., Midwest Guardrail System (MGS) with Round Posts: Douglas Fir, Ponderosa Pine, and Southern Yellow Pine, Federal Highway Administration (FHWA), Washington, D.C., B-175, June 25, 2008.

9. R.P. Bligh, W.L. Menges, and D.L. Kuhn, *MASH Evaluation of TxDOT Roadside Safety Features – Phase I*, Report No. 0-6946-1, Texas A&M Transportation Institute, College Station, TX, January 2018.

10. R.P. Bligh, W.L. Menges, and R.R. Haug, *NCHRP Report 350 Test 3-71 on the Allied Tube & Conduit Dual Leg Perforated Square Steel Tube Temporary Sign Support*, Report No. 400001-ATC1, Texas A&M Transportation Institute, College Station, TX, December 2004.

11. C. Dobrovolny, R.P. Bligh, and W.L. Menges, *Crash Testing and Evaluation of Multiple Mailbox Supports for Use with Locking Architectural Mailboxes*, Report No. 9-1002-15-7, Texas A&M Transportation Institute, College Station, TX, February 2017.

12. R.P. Bligh, W.L. Menges, and D.L. Kuhn, *Crash Test and Evaluation of Locking Architectural Mailboxes*, Report No. 9-1002-12-9, Texas A&M Transportation Institute, College Station, TX, September 2014.

13. K.K. Mak, R.P. Bligh, and W.L. Menges, *Evaluation of Work Zone Barricades*, Report No. 3910-S, Texas A&M Transportation Institute, College Station, TX, November 1997.

14. K.K. Mak, R.P. Bligh, and W.L. Menges, *Evaluation of Work Zone Barricades and Temporary Sign Supports*, Report No. 5388-1F, Texas A&M Transportation Institute, College Station, TX, February 1996.

APPENDIX A. TXDOT C402 BRIDGE RAIL

A.1 DETAILS OF TXDOT C402 BRIDGE RAIL

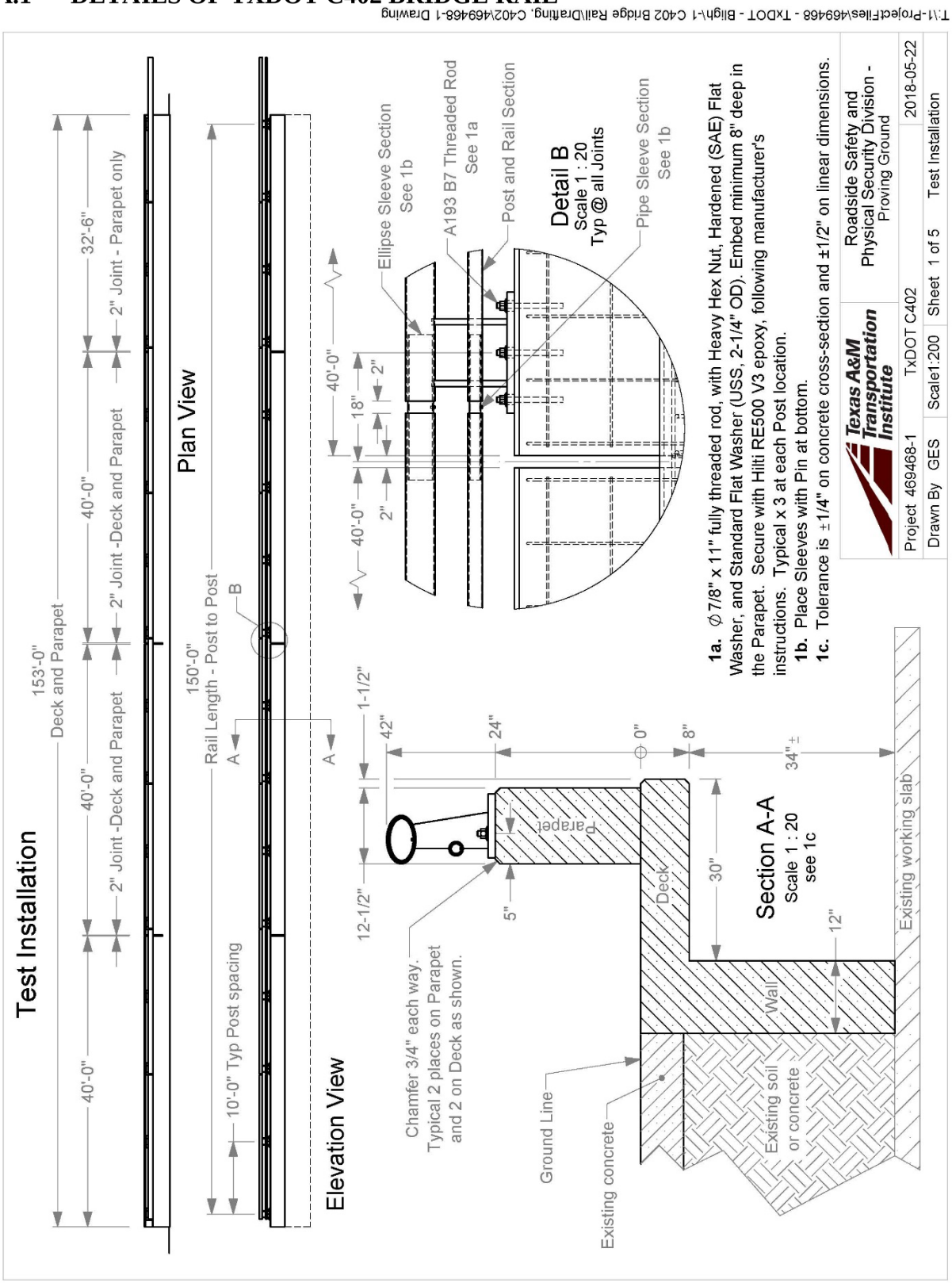

Concrete Details

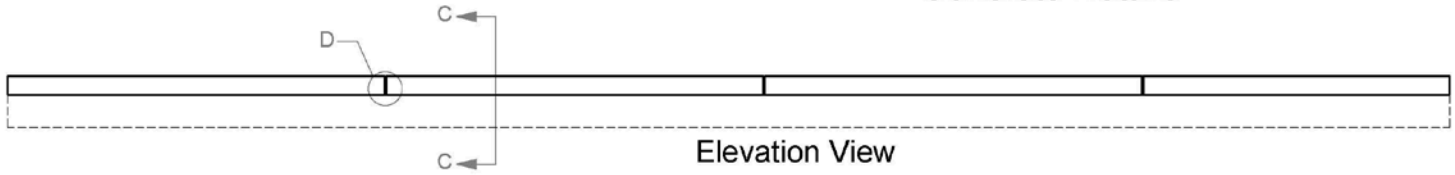

Elevation View

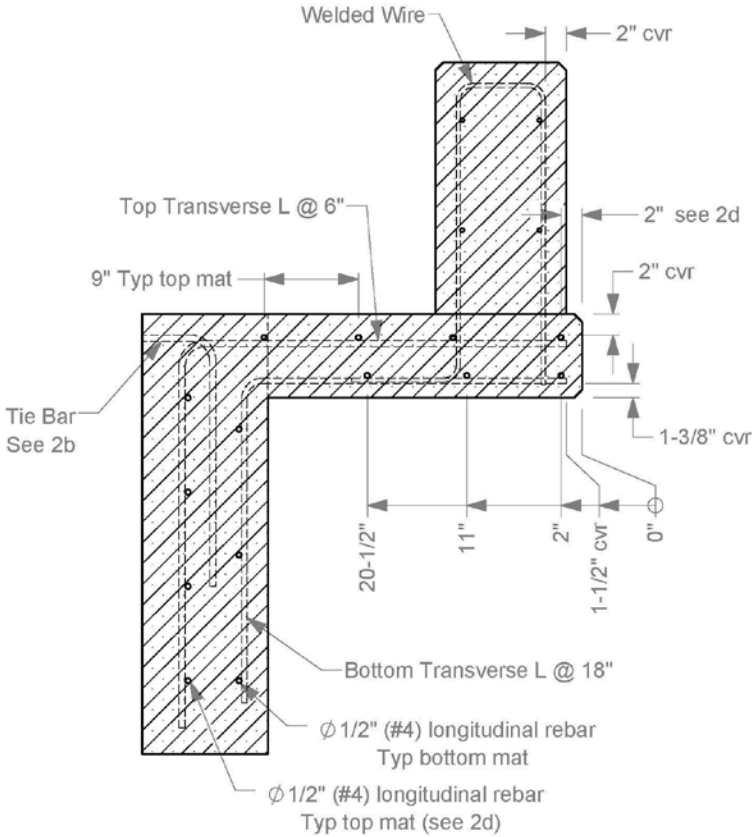

Section C-C

Scale 1 : 15

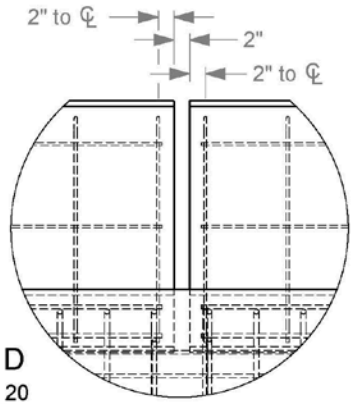

Detail D

Scale 1 : 20

Typ all Joints

2a. Concrete shall be TxDOT Class S (4000 psi) for the Wall and Deck, and TxDOT Class C (3600 psi) for the Parapet.

2b. Secure each Tie Bar to existing rebar protruding from the runway (not shown here) with a 3" long weld. Space at maximum 18".

2c. Minimum rebar lap is 19" for #4 bars. All rebar is grade 60. Concrete coverage is 2" at the top of the Deck and all sides of the Parapet, 1-3/8" at Deck bottom, and 1-1/2" on the Deck end (tolerance is ±1/4" on rebar coverage). Rebar location dimensions are to the center of the bar unless otherwise designated by *cvr* (cover).

2d. The longitudinal bars in the top mat of the Deck may be moved up to 3" to allow tying to Welded Wire.

2e. Tolerance is ±1/4" on concrete dimensions and ±1/2" on rebar spacing.

Texas A&M Transportation Institute	Roadside Safety and Physical Security Division - Proving Ground		
Project 469468-1	TxDOT C402		2018-05-22
Drawn By GES	Scale1:200	Sheet 2 of 5	Concrete Details

T:\1-ProjectFiles\469468 - TxDOT - Bligh-1 C402 Bridge Rail\Drafting, C402\469468-1 Drawing

Rebar Details

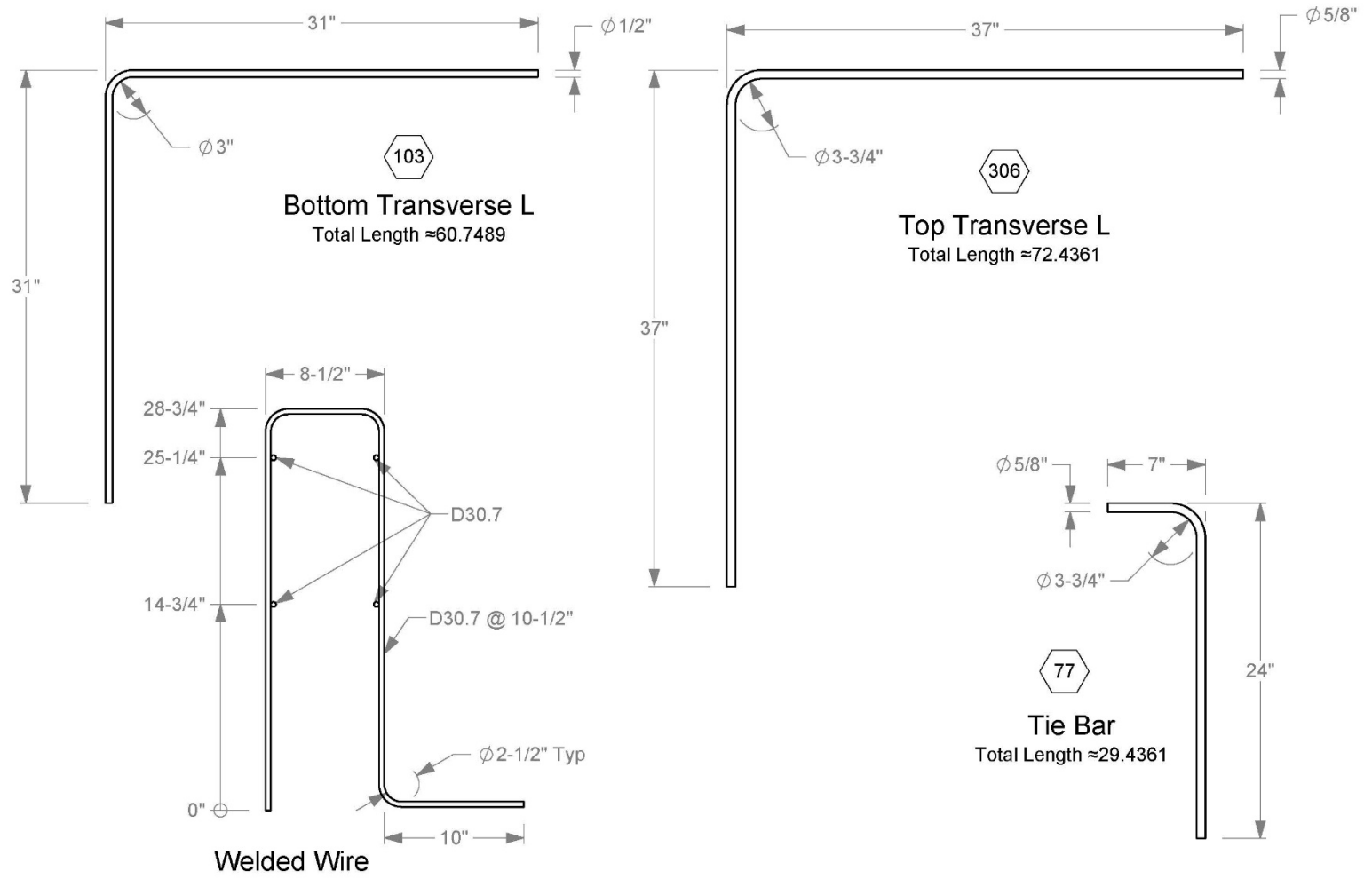

3a. The numerals in hexagons indicate the quantity needed for each. The length dimensions are given as a reference only. The individual dimensions take precedence in the event of a conflict.

3b. Tolerance on rebar dimensions is ±1/4".

Texas A&M Transportation Institute		Roadside Safety and Physical Security Division - Proving Ground	
Project 469468-1	TxDOT C402		2018-05-22
Drawn By GES	Scale 1:10	Sheet 3 of 5	Rebar Details

T:\1-ProjectFiles\469468 - TxDOT - Bligh\1 C402 Bridge Rail\Drafting, C402\469468-1 Drawing

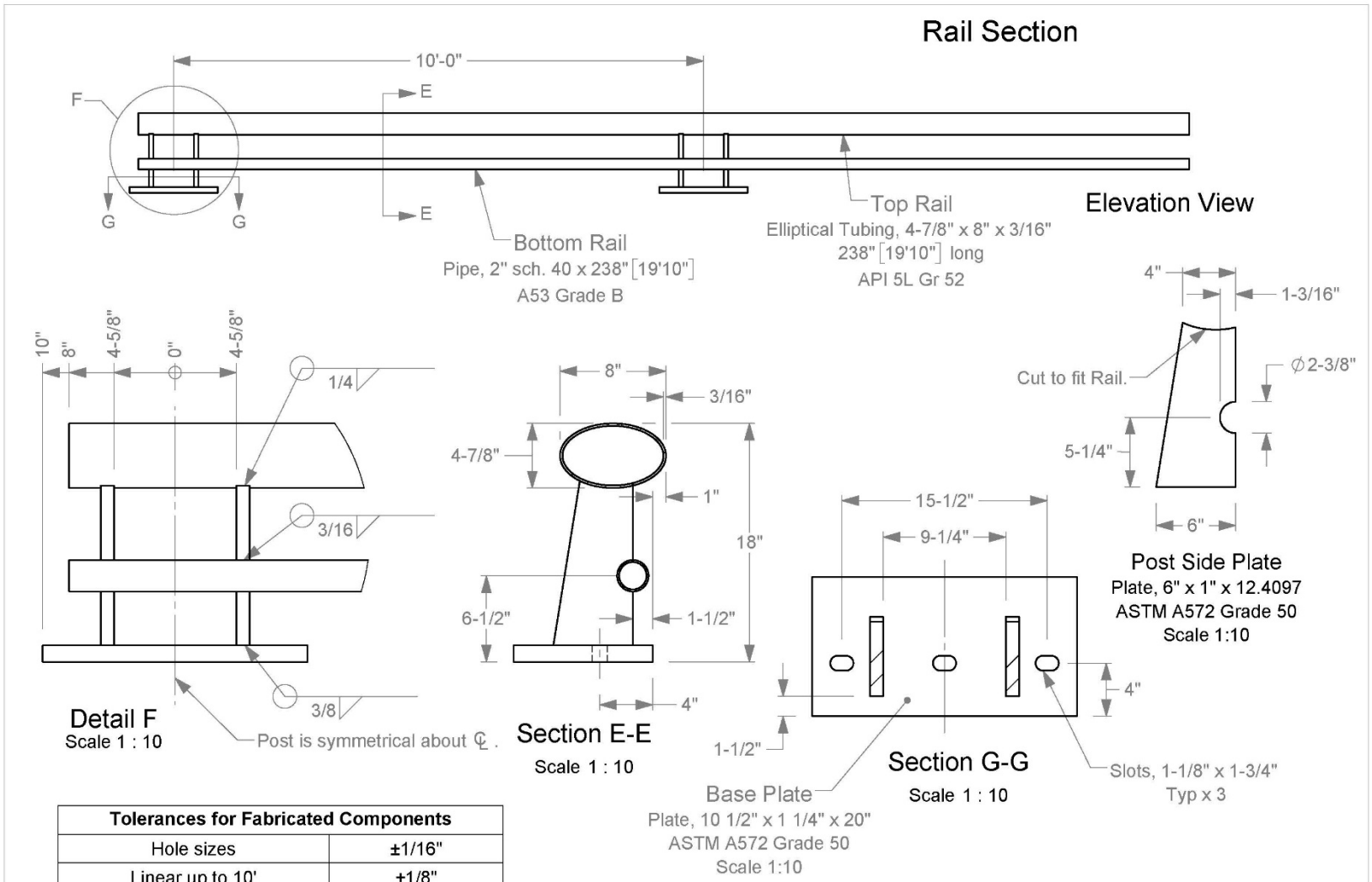

Tolerances for Fabricated Components	
Hole sizes	±1/16"
Linear up to 10'	±1/8"
Linear 10' - 20'	±1/4"

4a. Galvanize after all fabrication is complete.
4b. All welding must be performed by certified welders using industry standard practices.

Texas A&M Transportation Institute	Roadside Safety and Physical Security Division - Proving Ground		
Project 469468-1	TxDOT C402		2018-05-22
Drawn By GES	Scale 1:30	Sheet 4 of 5	Rail Section

T:\1-ProjectFiles\469468 - TxDOT - Bligh\1 C402 Bridge Rail\Drafting, C402\469468-1 Drawing

Sleeve Sections

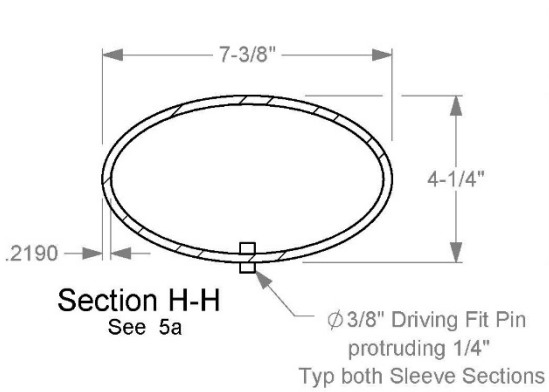

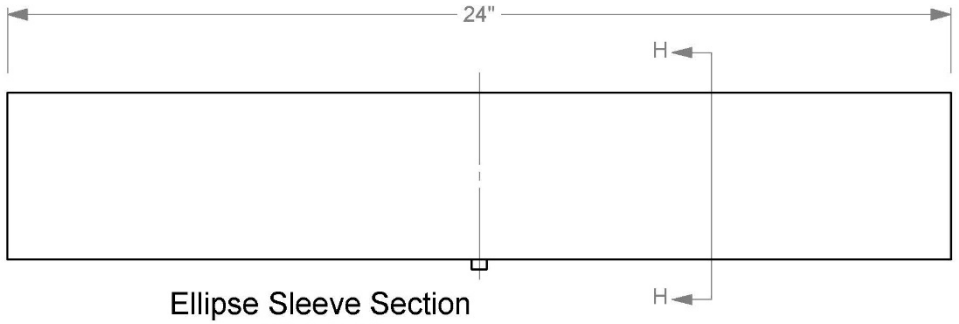



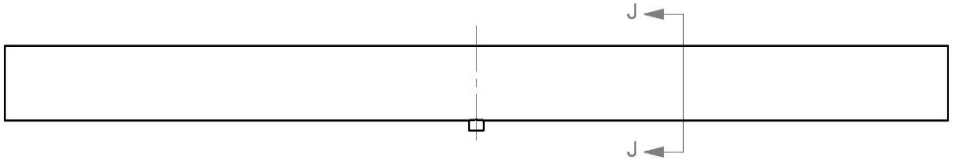

5a. Galvanize both Parts on this sheet after all fabrication.
5b. Provide material details and cert sheets for all metal components.

Texas A&M Transportation Institute		Roadside Safety and Physical Security Division - Proving Ground	
Project 469468-1	TxDOT C402		2018-05-22
Drawn By GES	Scale 1:4	Sheet 5 of 5	Sleeve Sections

T:\1-ProjectFiles\469468 - TxDOT - Bligh\1 C402 Bridge Rail\Drafting, C402\469468-1 Drawing

Texas Department of Transportation

RAILING MATERIAL

MATERIAL STATEMENT

SUPPLIER: Texas Corrugators-Austin Division, Inc.
ADDRESS: 105 Tradesman Park Dr.
Hutto, TX 78634
CONTRACT NUMBER: 512-388-0588

COUNTY: BRAZOS
PROJECT: TEXAS A&M TRAFFIC INSTITUTE
CONTROL:
CONTRACTOR: ENVIRONMENTAL SAFETY SERVICES INC.

Purchase Order #	Quantity (Amt/Units)	MATERIAL DESCRIPTION	Mill Name	Heat #	Material Use	Required Specification	Documentation HTR	Documentation Cert
R-0421	150.3 L. F.	4 7/8" X 8" X 1.88" PIPE	TEX-TUBE	A603568	C402 RAIL	API 5L GR 52	X	
SIN # R-0421-1	150.3 L. F.	2" SCH. 40 PIPE	EXLTUBE	A709879	C402 RAIL	A500-13	X	
	3 L. F.	1 ½" SCH. 40 PIPE	SOUTHLAND TUBE	SH0939	C402 RAIL	A500-13	X	
	12 L. F.	4 ¼" X 7 3/8" X .219" PIPE	TEX-TUBE	A507206	C402 RAIL	API 5L GR 52	X	
	23.3 SQ. FT.	1 ¼" PLATE	SSAB	E6F044	C402 RAIL	A572-50	X	
	15.6 SQ. FT.	1" PLATE WEIGHT THIS MTR = 4,407 LBS.	SSAB	M8B086	C402 RAIL	A572-50	X	

This is to certify that the materials listed above and on the attached supplement (if attached) are in conformance with the governing specification(s). This is also to certify that all manufacturing processes for steel and iron materials or for the application of coatings (epoxy, galvanizing, painting or any other coating that protects or enhances the value of the steel or iron material) to these materials occurred in the United States of America. Manufacturing processes are defined as all processes required to change the raw ore or scrap metal into the finished in-place steel or iron product. The attached mill test reports (MTRs) and Certifications (Cert.) are offered as proof of domestic origin.

Subscribed and sworn to before me
this 11th day of May 20 18
Notary Public Karen DuBose
My Commission Expires: 10 4 20 21

KAREN DUBOSE
Notary Public, State of Texas
Comm. Expires 10-04-2021
Notary ID 11033605

I declare under penalty of perjury under the laws of the United States of America and the State of Texas, that the foregoing is true and correct and that I am authorized to sign for the firm listed above.

Authorized Corporate Official Signature — Date: 5/11/18

Ryan Cole - Vice President
Type Name and Title

Texas Corrugators-Austin Division, Inc.
(Firm Name)

Tex-Tube Company
1503 N. Post Oak
Houston, Texas 77255

Purchase Order: 31889 Sales Order: SO40459 Page: 2

Heat Number	Vendor Name	Description	Mfg Date: 04/26/16
a603568	SDI Columbus,MS,USA	ELLIPTICAL TUBING, 4-7/8 X 8" X .188"WALL X 40'4"	12.94 lb/ft

CHEMICAL ANALYSIS

	C	Mn	P	S	Ni	Cr	Cu	Mo	Si	Ti	V	Nb	B	Ca	CE
Ladle-	0.060	0.770	0.008	0.001	0.050	0.070	0.150	0.010	0.210	0.014	0.004	0.027	0.0003	0.0025	
	Al: 0.019 SN: 0.008 N:														
Chem -	0.067	0.780	0.008	0.002	0.051	0.068	0.146	0.011	0.210	0.014	0.003	0.030	0.0003	0.0019	.13
	Al: 0.019 SN: 0.008 N:														
Chem -	0.063	0.780	0.008	0.002	0.051	0.068	0.146	0.011	0.208	0.014	0.003	0.029	0.0002	0.0017	.12
	Al: 0.019 SN: 0.008 N:														

MECHANICAL PROPERTIES

YS(ksi): 65.8 TS(ksi): 73.3 EL(%): 26% HRB : 84 Y/T(%): 0.90

COMMENTS

THIS MATERIAL WAS NOT HYDROSTATICALLY TESTED
1 INCH STRIP SPECIMEN.
MELTED AND MANUFACTURED IN THE U.S.A.
MATERIAL IS ERW PIPE.
MATERIAL MEETS CHEMICAL AND MECHANICAL PROPERTIES PSL2 - API 5L GR.X52.
MATERIAL PASSED EDDY CURRENT TESTING.
STEEL SUPPLIER:SDI-COLUMBUS,MS, U.S.A
COIL MANUFACTURER:SDI-COLUMBUS,MS,U.S.A

The above analyses and tensile properties
are correct to the best of my knowledge
and belief.

Orginals to Follow

Nanasco

02-09-2018 10:24 Load - 2982299 BL - 3837350 BLR466
Texas Corrugators, Inc Heat - A709879
Cust. PO - M-8759 Order-Line - 15759269 / 1

EXLTUBE

1000 BURLINGTON STREET, NORTH KANSAS CITY, MO 64116 1-816-474-5210 TOLL FREE 1-800-892-TUBE

STEEL VENTURES, LLC dba EXLTUBE

Certified Test Report

Customer:	Size:	Customer Order No.	Date:
Kloeckner Metals Corp-Roswell mlc mlr 500 Colonial Center Parkway #500 ROSWELL GA 30076-8953	02.375	7238723	01/31/2018
	Gauge: .154	Delivery No:83102651 Load No:2982979	
	Specification: ASTM A500-13 Gr.B/C, ASTM A53-12 Gr.B BNT*, ASME SA53 Gr.B BNT*		

Heat No	Yield KSI	Tensile KSI	Elongation % 2 Inch
A709879	55.8	63.4	30.50

Heat No	C	MN	P	S	SI	CU	NI	CR	MO	V
A709879	0.0600	0.8300	0.0100	0.0030	0.0200	0.0800	0.0300	0.0500	0.0100	0.0040

This material was melted & manufactured in the U.S.A.
Coil Producing Mill: STEEL DYNAMICS COLUMBUS, COLUMBUS, MS

We hereby certify that all test results shown in this report are correct as contained in the records of our company. All testing and manufacturing is in accordance to A.S.T.M. parameters encompassed within the scope of the specifications denoted in the specification and grade tiles above. This product was manufactured in accordance with your purchase order requirements.
BNT=Grade B not pressure tested - meets tensile & chemical properties ONLY.

This material has not come into direct contact with mercury, any of its compounds, or any mercury bearing devices during our manufacturing process, testing, or inspections

This material is in compliance with EN 10204 Section 4.1 Inspection Certificate Type 3.1

This material has passed NDE (eddy current, A388) testing. This material has passed flattening tests.

Tensile test completed using test specimen with 3/4" reduced area.

STEEL VENTURES, LLC dba EXLTUBE

Jonathan Wolfe
Quality Assurance Manager

Hanasco

03-19-2018 01:05 Load - 3009755 BL - 3839632 BLR466
Texas Corrugators, Inc Heat - SH0939
Cust. PO - A-7212 Order-Line - 15898772 / 1

SOUTHLAND TUBE INCORPORATED
A NUCOR COMPANY

3525 Richard Arrington, Jr., Blvd. N.
Birmingham, Alabama 35234
Phone: (205) 251-1884
Lab Fax (205) 421-4561
Lab@SouthlandTube.com

TEST REPORT

Customer Name: KLOECKNER METALS CORPORATION

Customer PO No.: 7251157 Customer Part No: PI11240A5000252

Spec/Grade: A500-13 Grade B/C Heat No.: SH0939

Description: CARBON STEEL TUBING Print Date: 3/7/2018

Size/Length: 1-1/2" SCH 40 PIPE (.145") 21' Nominal Thickness: 0.145

Carbon (C):	0.0500	Tin (Sn):	0.0040	Vanadium (V):	0.0030
Manganese (Mn):	0.3900	Nickel (Ni):	0.0400	Columbium (Cb):	0.0010
Phosphorus (P):	0.0100	Chromium (Cr):	0.0600	Titanium (Ti):	0.0010
Sulphur (S):	0.0030	Molybdenum (Mo):	0.0100	Boron (B):	0.0000
Silicon (Si):	0.0150	Aluminum (Al):	0.0240	Calcium (Ca):	0.0020
Copper (Cu):	0.1300	Nitrogen (N):	0.0060	Carbon Equiv. (CE):	0.1409

Sample Number	Sample Date	Tensile (psi)	Yield (psi)	Elongation (%)
SL61027	2/21/2018	64,500	59,700	24.00

We hereby certify that the above figures are correct as contained in the records of this company. Testing, where it is performed, is performed according to applicable standards (Yield Strength determined using 0.2% offset method and Elongation is measured over a 2" gauge length). Finished goods that require destructive testing by either flattening or flaring to meet the requirements of the standard to which they are certified have been destructively tested in accordance with the pertinent standard. Further, this certification is compliant with the EN10204:2004 Standard for Type 3.1 Inspection Documents.

Ron Lowery

Laboratory Manager
Southland Tube Incorporated

Melted & Manufactured in the U.S.A.

STI Pickup No.: 03LB087 STI Order No.: 00460563 STI Item No.: 1.9RS4021

TEX-TUBE
P.O. BOX 55710 • HOUSTON, TEXAS 77255-5710
(713) 686-4351 x 219 PHONE
(713) 685-3247 FAX
www.tex-tube.com

Purchase Order: 30028 Sales Order: SO39919

Heat Number	Vendor Name	Description	Mfg Date: 07/29/15
a507206	SDI Columbus,MS,USA	ELLIPTICAL TUBING, 4-1/4 X 7-3/8" X .219" WALL	13.52 lb/ft

CHEMICAL ANALYSIS

	C	Mn	P	S	Ni	Cr	Cu	Mo	Si	Ti	V	Nb	B	Ca	CE
Ladle	0.060	0.760	0.008	0.001	0.040	0.050	0.110	0.010	0.240	0.016	0.004	0.029	0.0001	0.0029	
	Al: 0.016	SN: 0.007	N:												
Chem -	0.055	0.780	0.012	0.003	0.044	0.053	0.118	0.011	0.238	0.015	0.003	0.032	0.0002	0.0017	.11
	Al: 0.017	SN: 0.007	N:												
Chem -	0.062	0.770	0.012	0.003	0.044	0.051	0.118	0.011	0.236	0.015	0.003	0.031	0.0003	0.0015	.12
	Al: 0.016	SN: 0.007	N:												

MECHANICAL PROPERTIES:

YS(ksi): 73.1 TS(ksi): 78.0 EL(%): 25% HRB : 85 Y/T(%): 0.94

COMMENTS

THIS MATERIAL WAS NOT HYDROSTATICALLY TESTED
1 INCH STRIP SPECIMEN.
MELTED AND MELTED AND MANUFACTURED IN THE U.S.A.
MATERIAL IS ERW PIPE.
MATERIAL MEETS CHEMICAL AND MECHANICAL PROPERTIES PSL2 - API 5L GR.X52.
MATERIAL PASSED EDDY CURRENT TESTING.

The above analyses and tensile properties are correct to the best of my knowledge and belief.

Quality Control Dept

SFI-GRAY STEEL Date:3/5/2018 - Customer:TEXAS CORRUGATORS-AUSTIN DIV, (EMAIL INV) - PO#:R-0287 - P/N:

Test Certificate

13609 Industrial Road, Houston, TX 77015, US

Form TC1: Revision 2: Date 23 Apr 2014

1 / 5 / 2017 SFI-GRAY STEEL	Customer P.O. No.: 701536	Mill Order No.: 41-489081-01	Shipping Manifest : HT107894	
Customer Name:	Product Description: ASTM A572-50/M345(15)/A709-50/M345(16A)	Ship Date: 05 Jan 17 Cert Date: 05 Jan 17	Cert No: 031191330 (Page 1 of 1)	
Customer PO #:				
Thickness: 1 1/4" SFI PO #: 701536				
Heat & Slab: E6F044-B23				
Plate #: 57604	Size: 1.250 X 96.00 X 240.0 (IN)			

Tested Pieces				Tensiles						Charpy Impact Tests							
Heat Id	Piece Id	Tested Thickness	Tst Loc	YS (KSI)	UTS (KSI)	%RA	Elong % 2in	Elong % 8in	Tst Dir	Hardness	Abs. Energy(FTLB) 1 2 3 Avg	% Shear 1 2 3 Avg	Tst Tmp	Tst Dir	Tst Siz (mm)	BDWTT Tmp %Shr
E6F044	B23	1.252 (DISCRT)	L	60	83			24	T							
E6F049	C10	3.002 (DISCRT)	L	51	78		30		T							
E6F049	C11	0.999 (DISCRT)	L	61	83			21	T							

Heat Id	Chemical Analysis C	Mn	P	S	Si	Tot Al	Cu	Ni	Cr	Mo	Cb	V	Ti	
E6F044	.17	1.23	.009	<.001	.24	.029	.23	.15	.12	.05	.002	.091	.009	ORGN
E6F049	.18	1.19	.008	<.001	.21	.027	.22	.12	.08	.04	.001	.094	.009	USA USA

KILLED STEEL
MERCURY IS NOT A METALLURGICAL COMPONENT OF THE STEEL AND NO MERCURY WAS INTENTIONALLY ADDED DURING THE MANUFACTURE OF THIS PRODUCT.
MTR EN 10204:2004 INSPECTION CERTIFICATE 3.1 COMPLIANT
100% MELTED AND MANUFACTURED IN THE USA.
PRODUCTS SHIPPED:
⇨ E6F044 B23 PCES: 1, LBS: 8168 E6F049 C13 PCES: 1, LBS: 8168

(D) Cust Part # :

WE HEREBY CERTIFY THAT THIS MATERIAL WAS TESTED IN ACCORDANCE WITH, AND MEETS THE REQUIREMENTS OF, THE APPROPRIATE SPECIFICATION

Justin Ward
SENIOR METALLURGIST - PRODUCT

SFI GRAY STEEL - Date:3/5/2018 - Customer:TEXAS CORRUGATORS-AUSTIN DIV, (EMAIL INV) - PO#:R-0287 - P/N:

SSAB

Test Certificate

12400 Highway 43 North, Axis, Alabama 36505, US

Form TC1: Revision 2: Date 23 Apr 2014

2 / 19 / 2018 **SFI-GRAY STEEL**

Customer Name:

Customer PO #:

Thickness: 1" SLIP NO #: 702094

Heat & Mab: M8B086-D09

Plate #: 55202-8

Customer P.O. No.: 702094 | **Mill Order No.: 41-528068-01** | **Shipping Manifest : AT259583**

Product Description: ASTM A572-50/M345(15)/A709-50/M345(17)

Ship Date: 12 Feb 18
Cert Date: 12 Feb 18

Cert No: 081648518
(Page 1 of 1)

Size: 1.000 X 96.00 X 240.0 (IN)

Tested Pieces

Heat Id	Piece Id	Tested Thickness	Tst Loc
M8B086	D09	0.999 (DISCRT)	L

Tensiles

YS (KSI)	UTS (KSI)	%RA	Elong % 2in	Elong % 8in	Tst Dir	Hardness
58	79			23	T	

Charpy Impact Tests

Abs. Energy(FTLB) 1	2	3	Avg	% Shear 1	2	3	Avg	Tst Tmp	Tst Dir	Tst Siz (mm)	BDWTT Tmp	BDWTT %Shr

Chemical Analysis

Heat Id	C	Mn	P	S	Si	Tot Al	Cu	Ni	Cr	Mo	Cb	V	Ti
M8B086-D09	.17	1.04	.009	<.001	.19	.026	.23	.13	.11	.06	.000	.042	.001

ORGN USA

KILLED STEEL
MERCURY IS NOT A METALLURGICAL COMPONENT OF THE STEEL AND NO MERCURY WAS INTENTIONALLY ADDED DURING THE MANUFACTURE OF THIS PRODUCT.
MTR EN 10204:2004 INSPECTION CERTIFICATE 3.1 COMPLIANT
100% MELTED AND MANUFACTURED IN THE USA.
PRODUCTS SHIPPED:
⇨ M8B086 D09 PCES: 7, LBS: 45738

(0) Cust Part # :

WE HEREBY CERTIFY THAT THIS MATERIAL WAS TESTED IN ACCORDANCE WITH, AND MEETS THE REQUIREMENTS OF, THE APPROPRIATE SPECIFICATION

Justin Ward
SENIOR METALLURGIST - PRODUCT

CMC

STRAIGHT BILL OF LADING-SHORT FORM
ORIGINAL-NON NEGOTIABLE

72421556-01

SHIPMENT NO.(BOL) : 72421556 DATE AND TIME : 04/02/2018 12:53:46 SHIP FROM : CMC Sterling Steel Truck 2001 Brittmoore Road Houston, TX 77043-2208 USA Contact Phone No. :713-690-0347 Fax No. :	CARRIER'S NAME: Imber Ventura TRUCK/UNIT No: CMC INCO TERMS: CPT Bryan SHIP TO: 3101939 Tx A & M University Transporation 3100 State Hwy 47, Bldg. 7091 Bryan, TX 77807-0000 USA Contact Phone No. :(254)859-5494 Fax No. :(254)859-5497	SEAL NUMBER : TRAILER/RAILCAR No: #553015 SOLD TO: 3007327 Ellis Mc Ginnis Construction 2895 Eddy Gatesville Pkwy Eddy, TX 76524-3911 USA Contact Phone No. :2548595494 Fax No. :2548595497

Subject to Section 7: Subject to Section 7 of Conditions of applicable bill of lading, if this shipment is to be delivered to the consignee without recourse on the consignor, the consignor shall sign the following statement. The carrier shall not make delivery of this shipment without payment of freight and all other lawful charges.

Consignor's Signature : _____

BOL INSTRUCTIONS:

NOTES/SPECIAL INSTRUCTIONS:

Additional Instructions :

Jim (254)227-2815 1st Stop

Material Details

Delivery	Cust PO	Ctrl Cd	Rel No.	Release Description	Dwg #	Material Description	PCS	Weight LB
PROJECT: R/1823300796 UP								
3137044	2802	0NKQ	1	C402 BRIDGE RAIL		Rebar Black 60/420		4,230
3137048	2802	0NKR	2	C411 BRIDGE RAIL		Rebar Black 60/420		3,931
3137050	2802	0NKW	3	C412 BRIDGE RAIL		Rebar Black 60/420		8,533
						Total Weight		16,694

MTR'S INCLUDED

95 Miles

RECEIVED, subject to the classifications in effect on the date of the issue of the Bill of Lading, the property described above, in apparent good order, except as noted (contents of packages unknown), marked, consigned, and destined as indicated below, which said carrier (the word carrier being understood throughout this contract as meaning any person or corporation in possession of the property under the contract) agrees to carry to its usual place of delivery at said destination, if on its route, otherwise to deliver to another carrier on the route to said destination. It is mutually agreed, as to each carrier of all or any said property over all or any portion of said route to destination, and as to each party at any time interested in all or any of said property, that every service to be performed hereunder shall be subject to all the terms and conditions of the Uniform Domestic Straight Bill of Lading set forth (1) in Official, Southern, Western and Illinois Freight Classifications in effect on the date hereof, if this is a rail or a rail-water shipment, or (2) in the applicable motor carrier classification or tariff if this is a motor carrier shipment. Shipper hereby certifies that he is familiar with all the terms and conditions of the said bill of lading, including those on the back thereof, set forth in the classification or tariff which governs the transportation of this shipment and the said terms and conditions are hereby agreed to by this shipper and accepted for himself and his assigns. This is to certify that the above articles are properly describe by name and are packed and marked and are in proper condition for transportation according to regulations by the Interstate Commerce Commission. * If the shipment moves between two ports by a carrier by water, the law requires that the bill of lading shall state whether it is "carrier's or shipper's weight." * Shipper's imprints in lieu of stamp, not a part of Bill of Lading approved by the Interstate Commerce Commission. NOTE: Where the rate is dependent on value, shippers are required to state specifically in writing the agreed or declared value of property. The agreed or declared value of the property is hereby specifically state by the shipper to be not exceeding.

DRIVER'S SIGNATURE/AGENT : Ventura

NOTICE TO RECEIVERS :Please check each item on this shipping bill carefully. CMC will not be responsible for any exceptions to goods unless notified within twenty four hours and noted on this document.

RECEIVED BY : _____ DATE: _____ TIME: _____

DELIVERED BY: Imber Ventura DATE: 4-3-18 TIME IN: _____ TIME OUT _____

469468

STRAIGHT BILL OF LADING-SHORT FORM
ORIGINAL-NON NEGOTIABLE

CMC

72421556-01

SHIPMENT NO.(BOL) : 72421556 DATE AND TIME : 04/02/201812:53:46 SHIP FROM : CMC Sterling Steel Truck 2001 Brittmoore Road Houston, TX 77043-2208 USA Contact Phone No. :713-690-0347 Fax No. :	CARRIER'S NAME: Imber Ventura TRUCK/UNIT No: CMC INCO TERMS: CPT Bryan SHIP TO: 3101939 Tx A & M University Transporation 3100 State Hwy 47, Bldg. 7091 Bryan, TX 77807-0000 USA Contact Phone No. :(254)859-5494 Fax No. :(254)859-5497	SEAL NUMBER : TRAILER/RAILCAR No: SOLD TO: 3007327 Ellis Mc Ginnis Construction 2895 Eddy Gatesville Pkwy Eddy, TX 76524-3911 USA Contact Phone No. :2548595494 Fax No. :2548595497

Subject to Section 7: Subject to Section 7 of Conditions of applicable bill of lading, if this shipment is to be delivered to the consignee without recourse on the consignor, the consignor shall sign the following statement. The carrier shall not make delivery of this shipment without payment of freight and all other lawful charges.

Consignor's Signature : _____

BOL INSTRUCTIONS:

NOTES/SPECIAL INSTRUCTIONS:
Additional Instructions :

Material Details

Delivery	Cust PO	Ctrl Cd	Rel No.	Release Description	Dwg #	Material Description	PCS	Weight LB
PROJECT: P/1823300796 UP								
3137044	2802	0NKQ	1	C402 BRIDGE RAIL		Rebar Black 60/420		4,230
3137048	2802	0NKR	2	C411 BRIDGE RAIL		Rebar Black 60/420		3,931
3137050	2802	0NKW	3	C412 BRIDGE RAIL		Rebar Black 60/420		8,533
						Total Weight		16,694

MTR'S INCLUDED

RECEIVED, subject to the classifications in effect on the date of the issue of the Bill of Lading, the property described above, in apparent good order, except as noted (contents of packages unknown), marked, consigned, and destined as indicated below, which said carrier (the word carrier being understood throughout this contract as meaning any person or corporation in possession of the property under the contract) agrees to carry to its usual place of delivery at said destination, if on its route, otherwise to deliver to another carrier on the route to said destination. It is mutually agreed, as to each carrier of all or any said property over all or any said property over all or any portion of said route to destination, and as to each party at any time interested in all or any of said property, that every service to be performed hereunder shall be subject to all the terms and conditions of the Uniform Domestic Straight Bill of Lading set forth (1) in Official, Southern, Western and Illinois Freight Classifications in effect on the date hereof, if this is a rail or a rail-water shipment, or (2) in the applicable motor carrier classification or tariff if this is a motor carrier shipment. Shipper hereby certifies that he is familiar with all the terms and conditions of the said bill of lading, including those on the back thereof, set forth in the classification or tariff which governs the transportation of this shipment and the said terms and conditions are hereby agreed to by the shipper and accepted for himself and his assigns. This is to certify that the above articles are properly describe by name and are packed and marked and are in proper condition for transportation according to regulations by the Interstate Commerce Commission. * If the shipment moves between two ports by a carrier by water, the law requires that the bill of lading shall state whether it is "carrier's or shipper's weight." * Shipper's imprints in lieu of stamp; not a part of Bill of Lading approved by the Interstate Commerce Commission. NOTE: Where the rate is dependent on value, shippers are required to state specifically in writing the agreed or declared value of property. The agreed or declared value of the property is hereby specifically state by the shipper to be not exceeding.

DRIVER'S SIGNATURE/AGENT : _____

NOTICE TO RECEIVERS :Please check each item on this shipping bill carefully. CMC will not be responsible for any exceptions to goods unless notified within twenty four hours and noted on this document.

RECEIVED BY : _____ DATE: _____ TIME: _____

DELIVERED BY: _____ DATE: _____ TIME IN: _____ TIME OUT _____

CMC Sterling Steel
2001 Britmoore
Houston, TX 77043-
Phone: (713) 690-0347 FAX: (713) 690-5758

JOB NUMBER	RELEASE NUMBER	REQ. DELIVERY DATE	PAGE
1823300796	1		1 of 1

JOB NAME	CC
TX A&M UNIV TRANSP INSTITUT(DW	0NKQ

CUSTOMER	BY
ELLIS-MCGINNIS CONSTRUCTION CO.	GL

MATERIAL TYPE	REFERENCE	DRAWING ID	DESCRIPTION
Rebar, Grade 60, Black			C402 BRIDGE RAIL

Itm	Qty	Size	Length	Mark	Shape	Lbs	A	B	C	D	E	F/R	G	H	J	K	O	BC
1	310	5	6-02	TL	17	1995		3-01	3-01									AC03
2	120	5	2-07	TB	17	323		0-07	2-00									AC03
	430.					2318.												
3	105	4	5-02	BL	17	363		2-07	2-07									AC02
4	58	4	40-00	R4		1550												ST
	163.					1913.												

Total Weight: 4,231 Lbs

Longest Length: 40-00

WEIGHT SUMMARY

	TOTAL			STRAIGHT			LIGHT BENDING			HEAVY BENDING		
SIZE	ITEMS	PIECES	LBS	ITEMS	PIECES	LBS	ITEMS	PIECES	LBS	ITEMS	PIECES	LBS
Rebar, Grade 60, Black												
4	2	163	1,913	1	58	1,550	0	0	0	1	105	363
5	2	430	2,318	0	0	0	0	0	0	2	430	2,318
	4	593	4,231	1	58	1,550	0	0	0	3	535	2,681

Total Weight: 4,231 Lbs

Longest Length: 40-00

v16.02.080 (T) (HOW) ©2018 aSa UNAUTHORIZED REPRODUCTION PROHIBITED Monday, March 26, 2018 3:01 PM

CMC Sterling Steel
2001 Britmoore
Houston, TX 77043-
Phone: (713) 690-0347 FAX: (713) 690-5758

JOB NUMBER	RELEASE NUMBER	REQ. DELIVERY DATE	PAGE
1823300796	2		1 of 1

JOB NAME	CC
TX A&M UNIV TRANSP INSTITUT(DW	0NKR

CUSTOMER	BY
ELLIS-MCGINNIS CONSTRUCTION CO.	GL

MATERIAL TYPE	REFERENCE	DRAWING ID	DESCRIPTION
Rebar, Grade 60, Black			C411 BRIDGE RAIL

Itm	Qty	Size	Length	Mark	Shape	Lbs	A	B	C	D	E	F/R	G	H	J	K	O	BC
1	4	7	40-00	R7		327												ST
	4.					327.												
2	105	5	8-08	S	T2	949	0-06	0-06	3-04	0-06	3-04		0-06					AC14
3	155	5	6-02	TL	17	997		3-01	3-01									AC03
4	105	5	3-05	U	18	375	1-051	1-021	0-10						0-06			AC03
5	60	5	2-07	TB	17	161		0-07	2-00									AC03
6	4	5	40-00	R5		167												ST
	429.					2649.												
7	60	4	5-02	BL	17	207		2-07	2-07									AC02
8	28	4	40-00	R4		748												ST
	88.					955.												

Total Weight: 3,931 Lbs

Longest Length: 40-00

WEIGHT SUMMARY

SIZE	TOTAL ITEMS	TOTAL PIECES	TOTAL LBS	STRAIGHT ITEMS	STRAIGHT PIECES	STRAIGHT LBS	LIGHT BENDING ITEMS	LIGHT BENDING PIECES	LIGHT BENDING LBS	HEAVY BENDING ITEMS	HEAVY BENDING PIECES	HEAVY BENDING LBS
Rebar, Grade 60, Black												
4	2	88	955	1	28	748	0	0	0	1	60	207
5	5	429	2,649	1	4	167	1	105	949	3	320	1,533
7	1	4	327	1	4	327	0	0	0	0	0	0
	8	521	3,931	3	36	1,242	1	105	949	4	380	1,740

Total Weight: 3,931 Lbs

Longest Length: 40-00

v16.02.080 (T) (HCW) ©2018 aSa UNAUTHORIZED REPRODUCTION PROHIBITED Monday, March 26, 2018 3:01 PM

CMC Sterling Steel
2001 Britmoore
Houston, TX 77043-
Phone: (713) 690-0347 FAX: (713) 690-5758

JOB NUMBER	RELEASE NUMBER	REQ. DELIVERY DATE	PAGE
1823300796	3		1 of 1

JOB NAME	CC
TX A&M UNIV TRANSP INSTITUT(DW	0NKW

CUSTOMER	BY
ELLIS-MCGINNIS CONSTRUCTION CO.	GL

MATERIAL TYPE	REFERENCE	DRAWING ID	DESCRIPTION
Rebar, Grade 60, Black			C412 BRIDGE RAIL

Itm	Qty	Size	Length	Mark	Shape	Lbs	A	B	C	D	E	F/R	G	H	J	K	O	BC
1	3	8	5-00	R3		40												0
	3.					40.												
2	170	6	6-11	U	S11	1767		6-112						3-042			0-063	TB
	170.					1767.												
3	340	5	7-01	TL-5	17	2511		4-00	3-012									AC03
4	85	5	6-03	BL	17	554		3-042	2-102									AC03
5	95	5	2-08	TB	17	265		0-07	2-01									AC03
6	40	5	2-07	UB	S11	108		2-07						1-03			0-033	AC
7	12	5	40-00	R5		501												ST
	572.					3939.												
8	160	4	7-01	TL-4	17	757		4-00	3-012									AC02
9	70	4	40-00	R4		1870												ST
	230.					2627.												
10	170	3	2-06	P	S11	160		2-06						1-022			0-023	AC
	170.					160.												

Total Weight: 8,533 Lbs

Longest Length: 40-00

WEIGHT SUMMARY

	TOTAL			STRAIGHT			LIGHT BENDING			HEAVY BENDING		
SIZE	ITEMS	PIECES	LBS	ITEMS	PIECES	LBS	ITEMS	PIECES	LBS	ITEMS	PIECES	LBS
Rebar, Grade 60, Black												
3	1	170	160	0	0	0	1	170	160	0	0	0
4	2	230	2,627	1	70	1,870	0	0	0	1	160	757
5	5	572	3,939	1	12	501	1	40	108	3	520	3,330
6	1	170	1,767	0	0	0	1	170	1,767	0	0	0
8	1	3	40	1	3	40	0	0	0	0	0	0
	10	1145	8,533	3	85	2,411	3	380	2,035	4	680	4,087

Total Weight: 8,533 Lbs

Longest Length: 40-00

v16.02.080 (T) (HOW) ©2018 aSa UNAUTHORIZED REPRODUCTION PROHIBITED Monday, March 26, 2018 3:02 PM

MATERIAL TEST REPORT

Date Printed: 03/14/2018

Mid American Steel & Wire

Bill to:
CMC REBAR
P O BOX 139094
DALLAS, TX 75313

Ship to:
CMC REBAR
2001 BRITTMOORE
HOUSTON, TX 77043

Customer No: 000000006015
PO Number: 4501198093
Ship Date: 03/14/2018
Order Number: 91943
Load Number: 116288

Item Number	Description
3REBAR	#3 GRADE 60 COILED REBAR

CHEMICAL ANALYSIS

Heat Number	C	Mn	P	S	Si	Cu	Ni	Cr	Mo	Sn	V	Al	N	Nb
3076185	0.3700	0.8000	0.0120	0.0320	0.2100	0.2800	0.2200	0.2100	0.0910	0.0130	0.0200	0.0010	0.0000	0.0000

MECHANICAL PROPERTIES

Heat Number	Yield (Psi/Mpa)	Tensile (Psi/Mpa)	Elongation (% 8" guage)	Bend Test Pass/Fail
3076185	76007 psi / 524 Mpa	111338 psi / 768 Mpa	12.50	Pass

I hereby certify that the above test results are correct as contained in the records of the company. All Manufacturing processes of the steel materials in this product, including melting have occurred in the United States. The material was produced and tested according to ASTM A615/A615M-065.

Quality Assurance: _____

MATERIAL TEST REPORT

PAGE 1

Date Printed: 03/29/2018

Mid American Steel & Wire
Mod®, Oklahoma

Customer No: 000000006015
PO Number: 4501201423
Ship Date: 03/29/2018
Order Number: 92181
Load Number: 116521

Bill to:
CMC REBAR
P O BOX 139094

DALLAS, TX 75313

Ship to:
CMC REBAR
2001 BRITTMOORE

HOUSTON, TX 77043

Item Number	Description
4REBAR	# 4 GRADE 60 COILED REBAR

CHEMICAL ANALYSIS

Heat Number	C	Mn	P	S	Si	Cu	Ni	Cr	Mo	Sn	V	Al	N	Nb
1820636	0.4400	0.9100	0.0160	0.0240	0.2400	0.2300	0.1700	0.2400	0.0600	0.0110	0.0020	0.0040	0.0077	0.0003

MECHANICAL PROPERTIES

Heat Number	Yield (Psi/Mpa)	Tensile (Psi/Mpa)	Elongation (% 8" guage)	Bend Test Pass/Fail
1820636	66470 psi / 458 Mpa	114647 psi / 791 Mpa	10.00	Pass

I hereby certify that the above test results are correct as contained in the records of the company. All Manufacturing processes of the steel materials in this product, including melting have occurred in the United States. The material was produced and tested according to ASTM A615/A615M-065.

Quality Assurance: _____

CMC STEEL TEXAS
1 STEEL MILL DRIVE
SEGUIN TX 78155-7510

CERTIFIED MILL TEST REPORT

For additional copies call
830-372-8771

We hereby certify that the test results presented here are accurate and conform to the reported grade specification

TOMMY HEWITT
Quality Assurance Manager

HEAT NO.:3078175
SECTION: REBAR 13MM (#4) 40'0" 420/60
GRADE: ASTM A615-16 Gr 420/60
ROLL DATE: 03/03/2018
MELT DATE: 02/27/2018
Cert. No.: 02/27/2018 / 078175A371

SOLD TO

SHIP TO

Delivery#:
BOL#:
CUST PO#:
CUST P/N:
DLVRY LBS / HEAT:
DLVRY PCS / HEAT:

Characteristic	Value
C	0.43%
Mn	0.73%
P	0.009%
S	0.046%
Si	0.19%
Cu	0.33%
Cr	0.10%
Ni	0.21%
Mo	0.079%
V	0.000%
Cb	0.002%
Sn	0.014%
Al	0.001%
Yield Strength test 1	62.0ksi
Tensile Strength test 1	99.2ksi
Elongation test 1	17%
Elongation Gage Lgth test 1	8IN
Bend Test Diameter	1.750IN
Bend Test 1	Passed

Characteristic	Value

Characteristic	Value

The Following is true of the material represented by this MTR:

- *Material is fully killed
- *100% melted and rolled in the USA
- *EN10204:2004 3.1 compliant
- *Contains no weld repair
- *Contains no Mercury contamination
- *Manufactured in accordance with the latest version of the plant quality manual
- *Meets the "Buy America" requirements of 23 CFR635.410

REMARKS :

TR No. 0-6946-R2

A-21

2019-03-26

MATERIAL TEST REPORT

Date Printed: 03/28/2018

Mid American Steel & Wire

Bill to:
CMC REBAR
P O BOX 139094
DALLAS, TX 75313

Ship to:
CMC REBAR
2001 BRITTMOORE
HOUSTON, TX 77043

Customer No: 000000006015
PO Number: 4501201440
Ship Date: 03/28/2018
Order Number: 92187
Load Number: 116527

Item Number	Description
5REBAR	# 5 GRADE 60 COILED REBAR

CHEMICAL ANALYSIS

Heat Number	C	Mn	P	S	Si	Cu	Ni	Cr	Mo	Sn	V	Al	N	Nb
1723630	0.4600	0.8700	0.0170	0.0260	0.2000	0.2100	0.1100	0.1900	0.0300	0.0110	0.0030	0.0010	0.0067	0.0005

MECHANICAL PROPERTIES

Heat Number	Yield (Psi/Mpa)	Tensile (Psi/Mpa)	Elongation (% 8" guage)	Bend Test Pass/Fail
1723630	62474 psi / 431 Mpa	108254 psi / 747 Mpa	11.71	Pass

I hereby certify that the above test results are correct as contained in the records of the company. All Manufacturing processes of the steel materials in this product, including melting have occurred in the United States. The material was produced and tested according to ASTM A615/A615M-065.

Quality Assurance: _____

CMC STEEL TEXAS
1 STEEL MILL DRIVE
SEGUIN TX 78155-7510

CERTIFIED MILL TEST REPORT

For additional copies call
830-372-8771

We hereby certify that the test results presented here are accurate and conform to the reported grade specification

TOMMY HEWITT
Quality Assurance Manager

HEAT NO.:3078356
SECTION: REBAR 16MM (#5) 40'0" 420/60
GRADE: ASTM A615-16 Gr 420/60
ROLL DATE: 03/07/2018
MELT DATE: 03/07/2018
Cert. No.: 82333189 / 078356A765

SOLD TO
CMC Rebar Houston-West
BRITTMOORE RD.
HOUSTON TX
US 77043-2208
713-690-0347

SHIP TO
CMC Sterling Steel
2001 Brittmoore Rd
Houston TX
US 77043-2208
7136900347
7136905758

Delivery#: 82333189
BOL#: 72398632
CUST PO#:
CUST P/N:
DLVRY LBS / HEAT: 24030.000 LB
DLVRY PCS / HEAT: 576 EA

Characteristic	Value
C	0.42%
Mn	0.86%
P	0.008%
S	0.045%
Si	0.18%
Cu	0.33%
Cr	0.10%
Ni	0.17%
Mo	0.088%
V	0.000%
Cb	0.002%
Sn	0.010%
Al	0.002%
Yield Strength test 1	64.9ksi
Tensile Strength test 1	102.5ksi
Elongation test 1	14%
Elongation Gage Lgth test 1	8IN
Bend Test Diameter	2.188IN
Bend Test 1	Passed

Characteristic	Value

Characteristic	Value

The Following is true of the material represented by this MTR:

- *Material is fully killed
- *100% melted and rolled in the USA
- *EN10204:2004 3.1 compliant
- *Contains no weld repair
- *Contains no Mercury contamination
- *Manufactured in accordance with the latest version of the plant quality manual
- *Meets the "Buy America" requirements of 23 CFR635.410

REMARKS :

03/12/2018 15:39:47
Page 1 OF 1



CMC STEEL TEXAS
1 STEEL MILL DRIVE
SEGUIN TX 78155-7510

CERTIFIED MILL TEST REPORT

For additional copies call
830-372-8771

We hereby certify that the test results presented here are accurate and conform to the reported grade specification.

TOMMY HEWITT
Quality Assurance Manager

HEAT NO.:3077775
SECTION: REBAR 19MM (#6) 60'0" 420/60
GRADE: ASTM A615-16 Gr 420/60
ROLL DATE: 02/21/2018
MELT DATE: 02/11/2018
Cert. No.: 82326504 / 077775A053

SOLD TO
CMC Rebar Houston-West
BRITTMOORE RD.
HOUSTON TX
US 77043-2208
713-690-0347

SHIP TO
CMC Sterling Steel
2001 Brittmoore Rd
Houston TX
US 77043-2208
7136900347
7136905758

Delivery#: 82326504
BOL#: 72388853
CUST PO#:
CUST P/N:
DLVRY LBS / HEAT: 43526.000 LB
DLVRY PCS / HEAT: 483 EA

Characteristic	Value
C	0.44%
Mn	0.87%
P	0.009%
S	0.049%
Si	0.17%
Cu	0.28%
Cr	0.12%
Ni	0.16%
Mo	0.048%
V	0.001%
Cb	0.002%
Sn	0.011%
Al	0.001%
Yield Strength test 1	62.7ksi
Tensile Strength test 1	103.1ksi
Elongation test 1	16%
Elongation Gage Lgth test 1	8IN
Bend Test Diameter	3.750IN
Bend Test 1	Passed

Characteristic	Value

Characteristic	Value

The Following is true of the material represented by this MTR:

*Material is fully killed
*100% melted and rolled in the USA
*EN10204:2004 3.1 compliant
*Contains no weld repair
*Contains no Mercury contamination
*Manufactured in accordance with the latest version of the plant quality manual
*Meets the "Buy America" requirements of 23 CFR635.410

REMARKS :

03/01/2018 18:08:26
Page 1 OF 1

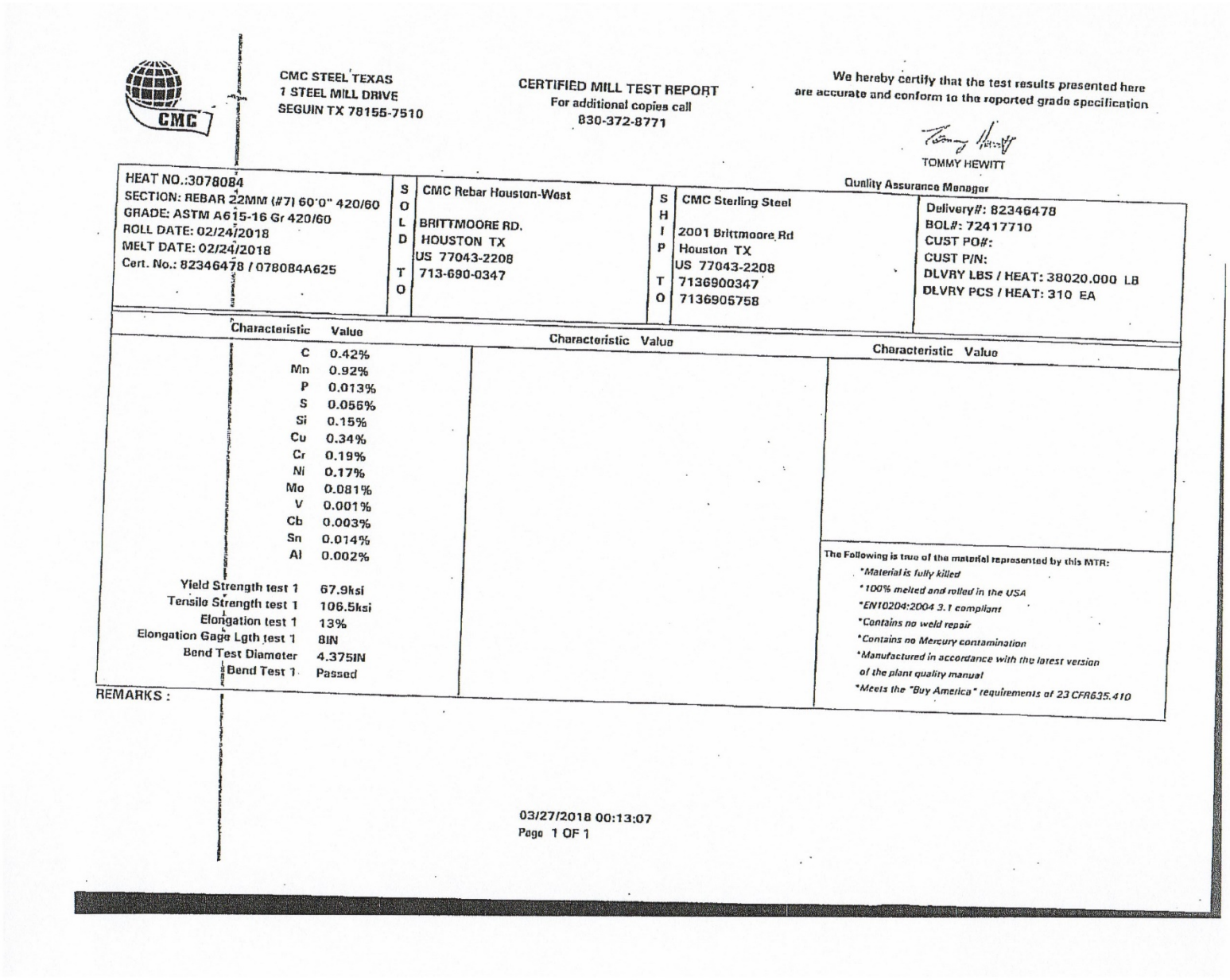

CMC STEEL TEXAS
1 STEEL MILL DRIVE
SEGUIN TX 78155-7510

CERTIFIED MILL TEST REPORT
For additional copies call
830-372-8771

We hereby certify that the test results presented here are accurate and conform to the reported grade specification

TOMMY HEWITT
Quality Assurance Manager

HEAT NO.:3078084
SECTION: REBAR 22MM (#7) 60'0" 420/60
GRADE: ASTM A615-16 Gr 420/60
ROLL DATE: 02/24/2018
MELT DATE: 02/24/2018
Cert. No.: 82346478 / 078084A625

SOLD TO
CMC Rebar Houston-West
BRITTMOORE RD.
HOUSTON TX
US 77043-2208
713-690-0347

SHIP TO
CMC Sterling Steel
2001 Brittmoore Rd
Houston TX
US 77043-2208
7136900347
7136905758

Delivery#: 82346478
BOL#: 72417710
CUST PO#:
CUST P/N:
DLVRY LBS / HEAT: 38020.000 LB
DLVRY PCS / HEAT: 310 EA

Characteristic	Value
C	0.42%
Mn	0.92%
P	0.013%
S	0.056%
Si	0.15%
Cu	0.34%
Cr	0.19%
Ni	0.17%
Mo	0.081%
V	0.001%
Cb	0.003%
Sn	0.014%
Al	0.002%
Yield Strength test 1	67.9ksi
Tensile Strength test 1	106.5ksi
Elongation test 1	13%
Elongation Gage Lgth test 1	8IN
Bend Test Diameter	4.375IN
Bend Test 1	Passed

The Following is true of the material represented by this MTR:
- *Material is fully killed
- *100% melted and rolled in the USA
- *EN10204:2004 3.1 compliant
- *Contains no weld repair
- *Contains no Mercury contamination
- *Manufactured in accordance with the latest version of the plant quality manual
- *Meets the "Buy America" requirements of 23 CFR635.410

REMARKS :

03/27/2018 00:13:07
Page 1 OF 1

CMC STEEL TEXAS
1 STEEL MILL DRIVE
SEGUIN TX 78155-7510

CERTIFIED MILL TEST REPORT

For additional copies call
830-372-8771

We hereby certify that the test results presented here are accurate and conform to the reported grade specification

TOMMY HEWITT
Quality Assurance Manager

HEAT NO.:3078559
SECTION: REBAR 25MM (#8) 50'0" 420/60
GRADE: ASTM A615-16 Gr 420/60
ROLL DATE: 03/17/2018
MELT DATE: 03/14/2018
Cert. No.: 82343437 / 078559A061

SOLD TO
CMC Rebar Houston-West
BRITTMOORE RD.
HOUSTON TX
US 77043-2208
713-690-0347

SHIP TO
CMC Sterling Steel
2001 Brittmoore Rd
Houston TX
US 77043-2208
7136900347
7136905758

Delivery#: 82343437
BOL#: 72412704
CUST PO#:
CUST P/N:
DLVRY LBS / HEAT: 21360.000 LB
DLVRY PCS / HEAT: 160 EA

Characteristic	Value
C	0.43%
Mn	0.93%
P	0.011%
S	0.045%
Si	0.21%
Cu	0.29%
Cr	0.20%
Ni	0.23%
Mo	0.082%
V	0.001%
Cb	0.002%
Sn	0.011%
Al	0.002%
Yield Strength test 1	70.3ksi
Tensile Strength test 1	109.8ksi
Elongation test 1	14%
Elongation Gage Lgth test 1	8IN
Bend Test Diameter	5.000IN
Bend Test 1	Passed

Characteristic Value

Characteristic Value

The Following is true of the material represented by this MTR:

*Material is fully killed
*100% melted and rolled in the USA
*EN10204:2004 3.1 compliant
*Contains no weld repair
*Contains no Mercury contamination
*Manufactured in accordance with the latest version of the plant quality manual
*Meets the "Buy America" requirements of 23 CFR635.410

REMARKS :

03/20/2018 18:55:38
Page 1 OF 1

Section A-A

Scale 1 : 20

Texas A&M Transportation Institute

Roadside Safety and Physical Security Division - Proving Ground

Project #469468-1 C402

Drawn by GES

Sheet 1 of 1 Concrete Locations

T:\1-ProjectFiles\469468 - TxDOT - Bligh\-1 C402 Bridge Rail\Drafting, C402\469468-1 Summary, etc

Texas A&M Transportation Institute Proving Ground, 3100 SH 47, Bldg 7091, Bryan, TX 77807 Texas A&M University, College Station, TX 77843, Phone 979-845-6375	5.7.2 Concrete Break	Doc. No. QPF 5.7.2	Revision Date: 2012-09-17
Quality Policy Form	Revised by: G. E. Schroeder Approved by: C. E. But	Revision: 5	Page: 1 of 1

Project No.: 469468-1 **Casting Date:** 4-18

Placement: PARAPET **Mix Design P.S.I.:** CLASS S 4000

Truck No.	Batch Ticket	Yards

Printed name of Technician taking sample: GREG FRITZ

Signature of Technician taking sample:

Printed name of Technician breaking sample: GREG FRITZ

Signature of Technician breaking sample:

Break Date	Cylinder Age	Truck No.	Total Load (Pounds)	PSI Break	Average
2018-5-10	22 DAYS	1	154,000	5450	
		1	152,500	5360	5370
		1	150,000	5305	
		2	149,500	5290	
		2	150,000	5305	5375
		2	156,500	5535	

KNIFE RIVER
AN MDU RESOURCES COMPANY

SOUTH REGION/MAIN OFFICE
6310 State Highway 21 West
Bryan, TX 77807
PH: (979) 361-2900
FAX: (979) 361-2920

RB 0020629

SOLD TO:
ELLIS-MCGINNIS CONSTRUC
P.O. BOX 40
EDDY

Disp Order#: 2027

JOB LOCATION
3100 STATE HWY 47, BLDG 7091 BRY
LF47 LF RELLIS CAMPUS RT AT THE
STOP SIGN 2ND STOP TAKE A LF 2ND
STOP TAKE A RT GO 2 STOP SIGN D
OWN TAKE A LF GO TO MORE STOP SI
GN DOWN TAKE RT GO THE NEXT STOP
PO#

TIME	FORMULA	LOAD SIZE	YARDS ORDERED		DRIVER/TRUCK		PLANT TRANSACTION #
12:09:52	CLCLS PROJECT	6.50	13.00	2801	EVOLUTION	39RENTAL3	
DATE	**LOAD #**	**YARDS DEL.**	**BATCH #**		**WATER TRIM**	**SLUMP**	**TICKET NUMBER**

WARNING
IRRITATING TO THE SKIN AND EYES
Contains Portland Cement. Wear Rubber Boots and Gloves, PROLONGED CONTACT MAY CAUSE BURNS. Avoid Contact With Eyes and Prolonged Contact With Skin. In Case of Contact With Skin or Eyes, Flush Thoroughly With Water. If Irritation Persists, Get Medical Attention. **KEEP CHILDREN AWAY.**

CONCRETE is a PERISHABLE COMMODITY and BECOMES THE PROPERTY of the PURCHASER UPON LEAVING the PLANT. ANY CHANGES or CANCELLATION of ORIGINAL INSTRUCTIONS MUST be TELEPHONED to the OFFICE BEFORE **LOADING** starts.
The undersigned promises to pay all costs, including reasonable attorney's fees, incurred in collecting any sums owed.
All accounts not paid within 30 days of delivery will bear interest at the rate of 18% per annum.
Not Responsible for Reactive Aggregate or Color Quality. No Claim Allowed Unless Made at Time Material is Delivered.
A $15.00 Service Charge and Loss of the Cash Discount will be Collected on all Returned Checks.
Excess Delay Time Charged @ $75.00/hr.

PROPERTY DAMAGE RELEASE
(TO BE SIGNED IF DELIVERY TO BE MADE INSIDE CURB LINE)
Dear Customer - The driver of this truck in presenting this RELEASE to you for your signature is of the opinion that the size and weight of this truck may possibly cause damage to the premises and/or adjacent property if he places the material in this load where you desire it. It is our wish to help you in every way that we can, but in order to do this the driver is requesting that you sign this RELEASE relieving him and this supplier from any responsibility from damage that may occur to the premises and or adjacent property, buildings, sidewalks, drive-ways, curbs, etc., by the delivery of this material, and that you also agree to help him remove mud from the wheels of his vehicle so that he will not litter the public street. Further, as additional consideration; the undersigned agrees to indemnify and hold harmless the driver of this truck and this supplier for any and all damage to the premises and/or adjacent property which may be claimed by anyone to have arisen out of delivery of this order.
SIGNED:
X

Excessive Water is Detrimental to Concrete Performance.
H_2O Added by Request / Authorized By:
GAL X
WEIGHMASTER
Thank you for your busine

NOTICE: MY SIGNATURE BELOW INDICATES THAT I HAVE READ THE HEALTH WARNING NOTICE AND SUPPLIER WILL NOT BE RESPONSIBLE FOR ANY DAMAGE CAUSED WHEN DELIVERING INSIDE CURB LINE.
LOAD RECEIVED BY
X

QUANTITY	CODE	DESCRIPTION	OUR MIXES ARE DESIGNED TO ACHIEVE SPECIFICATIONS AT A MAX 4" SLUMP	UNIT PRICE	EXTENDED PRICE

RETURNED TO PLANT	LEFT JOB	FINISH UNLOADING	ON SITE TESTING		AIR TEMP
			TESTING LAB:		
LEFT PLANT	ARRIVED JOB	START UNLOADING	SLUMP	CONCRETE TEMP.	
TOTAL ROUND TRIP	TOTAL AT JOB	UNLOADING TIME	AIR	CYLINDERS	

Tax
Prev. AMT
Ticket Total
Grand Total

ADDITIONAL CHARGE 1
ADDITIONAL CHARGE 2
GRAND TOTAL

Truck	Driver	User	Disp Ticket Num	Ticket	
39RENTAL3--3		user	20011734	11701	12:09 4/18/18

Load Size	Mix Code	Returned Qty	Mix Age	Seq	
6.50 CYDS	CLCLS			D	RB 0020629

Material	Design Qty	Required	Batched	% Var	% Moisture	Actual	Wat
CEMENT	396.00 lb	2574.00 lb	2584.00 lb	0.39%			
FLYASH	154.00 lb	1001.00 lb	1000.00 lb	-0.10%			
SAND	1287 lb	8796 lb	9110 lb	3.57%	5.15% M	53 gl	
LMSTN1"	1380 lb	9015 lb	9110 lb	1.06%	0.50% M	5 gl	
GRAVEL3/8"	480 lb	3151 lb	3170 lb	0.60%	1.00% M	4 gl	
WATER	247 lb	993 lb	993 lb	0.00%		119 gl	
POZZ80	28.00 oz	182.00 oz	182.00 oz	0.00%			

Actual Load	25978 lb	Num Batches:	1						
		Design W/C:	0.450	Water/Cement:	0.449 T	Design	192.7 gl	Actual	181.7 gl	To Add	11.0 gl
Slump:	5.00 in	Water in Truck:	0.0 gl	Adjust Water:	0.0 gl / Load	Trim Water:	-2.0 gl / CYL				
Actual W/C Ratio:	0.423	Actual Water:	182 gl	Batched Cement:	3584 lb	Allowable Water:	96 gl				

KNIFE RIVER
AN MDU RESOURCES COMPANY

SOUTH REGION/MAIN OFFICE
6310 State Highway 21 West
Bryan, TX 77807
PH: (979) 361-2900
FAX: (979) 361-2920

RB 0020626

SOLD TO:
ELLIS-MCGINNIS CONSTRUC
P.O. BOX 40
EDDY

Disp Order#: 2027

3100 STATE HWY 47, BLDG 7091 BRY
LF47 LF RELLIS CAMPUS RT AT THE
STOP SIGN 2ND STOP TAKE A LF 2ND
STOP TAKE A RT GO 2 STOP SIGN D
OWN TAKE A LF GO TO MORE STOP SI
GN DOWN TAKE RT GO THE NEXT STOP
PO#

TIME	FORMULA	LOAD SIZE	YARDS ORDERED		DRIVER/TRUCK		PLANT TRANSACTION #
11:23:35	CLCLS PROJECT	6.50	13.00	2801	EVOLUTION 39RENTAL4		
DATE		**LOAD #**	**YARDS DEL.**	**BATCH #**	**WATER TRIM**	**SLUMP**	**TICKET NUMBER**
04/18/18	TRUSTRUCK	1	6.50			5.00 IN	20011731

WARNING
IRRITATING TO THE SKIN AND EYES

Contains Portland Cement. Wear Rubber Boots and Gloves, PROLONGED CONTACT MAY CAUSE BURNS. Avoid Contact With Eyes and Prolonged Contact With Skin. In Case of Contact With Skin or Eyes, Flush Thoroughly With Water. If Irritation Persists, Get Medical Attention. **KEEP CHILDREN AWAY.**

CONCRETE is a PERISHABLE COMMODITY and BECOMES THE PROPERTY of the PURCHASER UPON LEAVING the PLANT. ANY CHANGES or CANCELLATION of ORIGINAL INSTRUCTIONS MUST be TELEPHONED to the OFFICE BEFORE **LOADING** starts.

The undersigned promises to pay all costs, including reasonable attorney's fees, incurred in collecting any sums owed.

All accounts not paid within 30 days of delivery will bear interest at the rate of 18% per annum.

Not Responsible for Reactive Aggregate or Color Quality. No Claim Allowed Unless Made at Time Material is Delivered.

A $15.00 Service Charge and Loss of the Cash Discount will be Collected on all Returned Checks.

Excess Delay Time Charged @ $75.00/hr.

PROPERTY DAMAGE RELEASE
(TO BE SIGNED IF DELIVERY TO BE MADE INSIDE CURB LINE)

Dear Customer - The driver of this truck in presenting this RELEASE to you for your signature is of the opinion that the size and weight of this truck may possibly cause damage to the premises and/or adjacent property if he places the material in this load where you desire it. It is our wish to help you in every way that we can, but in order to do this the driver is requesting that you sign this RELEASE relieving him and this supplier from any responsibility from damage that may occur to the premises and or adjacent property, buildings, sidewalks, drive-ways, curbs, etc., by the delivery of this material, and that you also agree to help him remove mud from the wheels of his vehicle so that he will not litter the public street. Further, as additional consideration; the undersigned agrees to indemnify and hold harmless the driver of this truck and this supplier for any and all damage to the premises and/or adjacent property which may be claimed by anyone to have arisen out of delivery of this order.

SIGNED:

X

Excessive Water is Detrimental to Concrete Performance.
H_2O Added by Request / Authorized By:

GAL X

WEIGHMASTER

Thank you for your busines

NOTICE: MY SIGNATURE BELOW INDICATES THAT I HAVE READ THE HEALTH WARNING NOTICE AND SUPPLIER WILL NOT BE RESPONSIBLE FOR ANY DAMAGE CAUSED WHEN DELIVERING INSIDE CURB LINE.

LOAD RECEIVED BY

x

QUANTITY	CODE	DESCRIPTION	UNIT PRICE	EXTENDED PRICE
		OUR MIXES ARE DESIGNED TO ACHIEVE SPECIFICATIONS AT A MAX 4" SLUMP		

RETURNED TO PLANT	LEFT JOB	FINISH UNLOADING	ON SITE TESTING		AIR TEMP
			TESTING LAB:		
LEFT PLANT	**ARRIVED JOB**	**START UNLOADING**	**SLUMP**	**CONCRETE TEMP.**	
11:45	12:00				
TOTAL ROUND TRIP	**TOTAL AT JOB**	**UNLOADING TIME**	**AIR**	**CYLINDERS**	

Tax
Prev. AMT
Ticket Total
Grand Total

ADDITIONAL CHARGE 1 _____

ADDITIONAL CHARGE 2 _____

GRAND TOTAL

Truck	Driver	User	Disp Ticket Num	Ticket	Time	Date
39RENTAL4	4	user	20011731	11698	11:23	4/18/18

Load Size	Mix Code	Returned	Qty	Mix Age	Seq	Load
6.50 CYDS	CLCLS				D	28

RB 0020626

Material	Design Qty	Required	Batched	% Var	% Moisture	Actual	Wat
CEMENT	396.00 lb	2574.00 lb	2586.00 lb	0.47%			
FLYASH	154.00 lb	1001.00 lb	998.00 lb	-0.30%			
SAND	1287 lb	8795 lb	9030 lb	1.06%	5.15% M	52 lb	
LMSTN#1	1380 lb	9019 lb	9070 lb	0.61%	0.50% M	5 lb	
GRAVEL#2	460 lb	3121 lb	3430 lb	21.94%	1.00% M	3 lb	
WATER	247 lb	993 lb	994 lb	0.13%		119 gl	
POZZOL	26.00 oz	182.00 oz	182.00 oz	0.00%			

Actual Load	26379 lb	Num Batches:	1						
Slump:	5.00 in	Design W/C:	0.450	Water/Cement:	0.449	T	Design	192.7 gl	Actual	181.2 gl	To Add	11.5 gl
Actual W/C Ratio:	0.422	Water in Truck:	0.0 gl	Adjust Water:	0.0 gl / Load		Trim Water:	-2.0 gl / CYD				
		Actual Water:	181 gl	Batched Cement:	3984 lb		Allowable Water:	99 gl				

Texas A&M Transportation Institute Proving Ground, 3100 SH 47, Bldg 7091, Bryan, TX 77807 Texas A&M University, College Station, TX 77843, Phone 979-845-6375	5.7.2 Concrete Break	Doc. No. QPF 5.7.2	Revision Date: 2012-09-17
Quality Policy Form	Revised by: G. E. Schroeder Approved by: C. E. But	Revision: 5	Page: 1 of 1

Project No.: 469468-1

Placement: T1 WALL
T2 & T3 DECK

Casting Date: 4-11

Mix Design P.S.I.: CLASS S 4000

Truck No.	Batch Ticket	Yards

Printed name of Technician taking sample: GREG FLITZ

Signature of Technician taking sample: Greg Flitz

Printed name of Technician breaking sample: GREG FLITZ

Signature of Technician breaking sample: Greg Flitz

Break Date	Cylinder Age	Truck No.	Total Load (Pounds)	PSI Break	Average
2018-5-10	29 DAYS	1	152,000	5375 ~	
		1	154,000	5520 ~	5460
		1	155,000	5480 ✓	
		2	171,000	6050 ~	
		2	172,000	6080 ~	6085
		2	173,000	6120 ✓	
		3	180,000	6365 ~	
		3	~~182,000~~ 175,000 LF.	6190 ✓	6250
		3	175,000	6190 ✓	

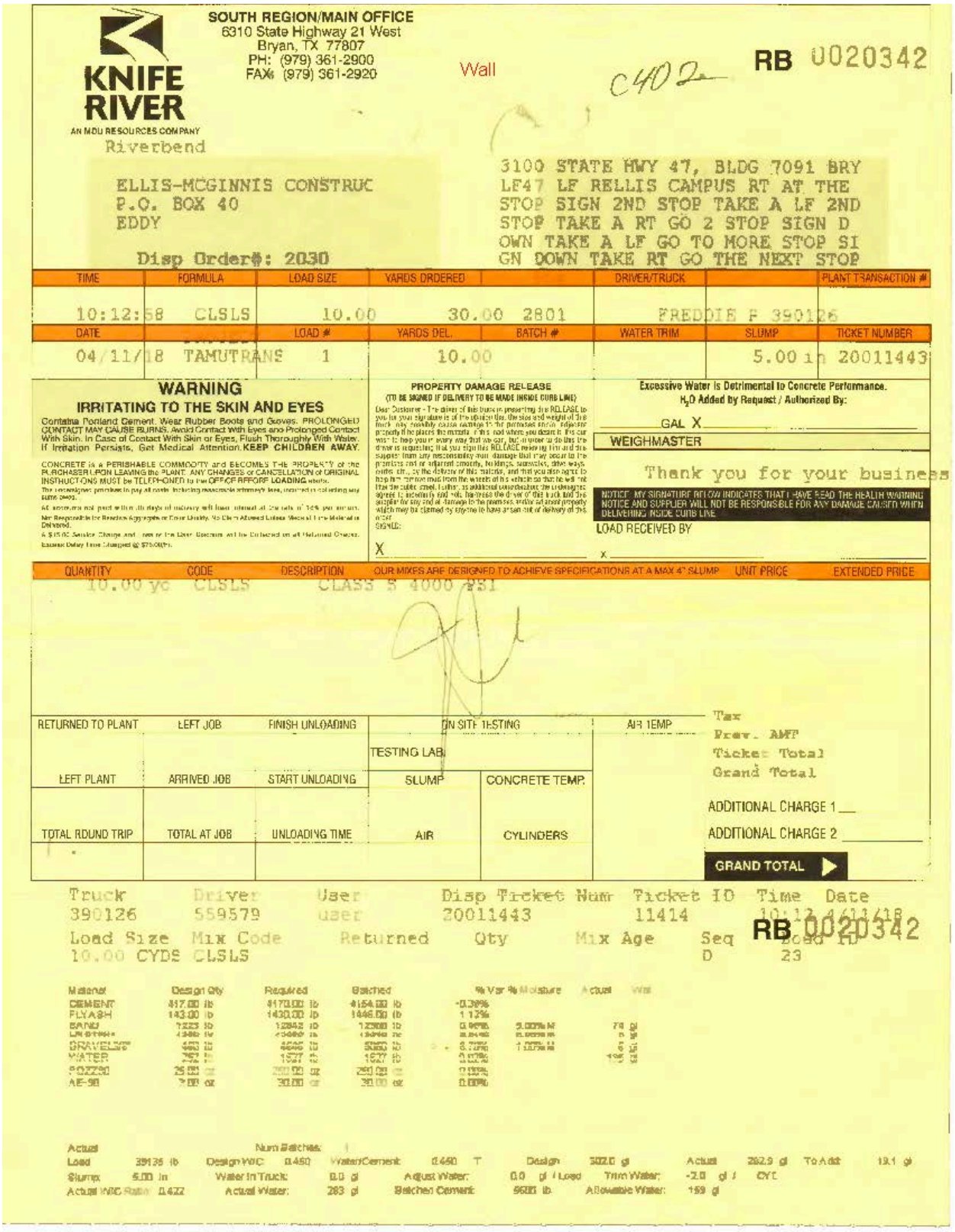

KNIFE RIVER
AN MDU RESOURCES COMPANY

SOUTH REGION/MAIN OFFICE
6310 State Highway 21 West
Bryan, TX 77807
PH: (979) 361-2900
FAX: (979) 361-2920

Wall

C402

RB 0020342

Riverbend

ELLIS-MCGINNIS CONSTRUC
P.O. BOX 40
EDDY

3100 STATE HWY 47, BLDG 7091 BRY
LF47 LF RELLIS CAMPUS RT AT THE
STOP SIGN 2ND STOP TAKE A LF 2ND
STOP TAKE A RT GO 2 STOP SIGN D
OWN TAKE A LF GO TO MORE STOP SI
GN DOWN TAKE RT GO THE NEXT STOP

Disp Order#: 2030

TIME	FORMULA	LOAD SIZE	YARDS ORDERED		DRIVER/TRUCK		PLANT TRANSACTION #
10:12:58	CLSLS	10.00	30.00	2801	FREDDIE F 390126		
DATE		LOAD #	YARDS DEL.	BATCH #	WATER TRIM	SLUMP	TICKET NUMBER
04/11/18	TAMUTRANS	1	10.00			5.00 in	20011443

WARNING
IRRITATING TO THE SKIN AND EYES

Contains Portland Cement. Wear Rubber Boots and Gloves. PROLONGED CONTACT MAY CAUSE BURNS. Avoid Contact With Eyes and Prolonged Contact With Skin. In Case of Contact With Skin or Eyes, Flush Thoroughly With Water. If Irritation Persists, Get Medical Attention. KEEP CHILDREN AWAY.

CONCRETE IS A PERISHABLE COMMODITY and BECOMES THE PROPERTY of the PURCHASER UPON LEAVING the PLANT. ANY CHANGES or CANCELLATION of ORIGINAL INSTRUCTIONS MUST be TELEPHONED to the OFFICE BEFORE LOADING starts.

The undersigned promises to pay all costs, including reasonable attorney's fees, incurred in collecting any sums owed.

All accounts not paid within 30 days of delivery will bear interest at the rate of 18% per annum.

Not Responsible for Random Aggregate or Color Quality. No Claim Allowed Unless Weight Ticket Made at Time Material is Delivered.

A $15.00 Service Charge and Loss of Cash Discount will be Collected on all Returned Checks.

Excessive Delay Time Charged @ $75.00/hr.

PROPERTY DAMAGE RELEASE
(TO BE SIGNED IF DELIVERY TO BE MADE INSIDE CURB LINE)

Dear Customer - The driver of this truck is presenting this RELEASE to you for your signature as the operation of the size and weight of this truck may possibly cause damage to the premises and/or adjacent property if he places the material where you desire it. We can assure you that we will do everything we can to help you in every way that we can, but in order to do this the driver is requesting that you sign this RELEASE relieving him and this supplier from any responsibility from damage that may occur to the premises and or adjacent property, to lawns, sidewalks, drive ways, curbs, etc., by the delivery of this material, and that you also agree to help him remove mud from the wheels of his vehicle so that he will not track the same over, if any, as additional consideration the undersigned agrees to indemnify and hold harmless the driver of this truck and this supplier for any and all damage to the premises, and/or all adjacent property which may be claimed by anyone to have arisen out of delivery of this order.

SIGNED:

X

Excessive Water is Detrimental to Concrete Performance.
H_2O Added by Request / Authorized By:

GAL X

WEIGHMASTER

Thank you for your business

NOTICE: MY SIGNATURE BELOW INDICATES THAT I HAVE READ THE HEALTH WARNING NOTICE AND SUPPLIER WILL NOT BE RESPONSIBLE FOR ANY DAMAGE CAUSED WHEN DELIVERING INSIDE CURB LINE.

LOAD RECEIVED BY

X

QUANTITY	CODE	DESCRIPTION	UNIT PRICE	EXTENDED PRICE
10.00 yc	CLSLS	CLASS S 4000 PSI		

OUR MIXES ARE DESIGNED TO ACHIEVE SPECIFICATIONS AT A MAX 4" SLUMP

RETURNED TO PLANT	LEFT JOB	FINISH UNLOADING	ON SITE TESTING		AIR TEMP
			TESTING LAB		
LEFT PLANT	ARRIVED JOB	START UNLOADING	SLUMP	CONCRETE TEMP.	
TOTAL RDUND TRIP	TOTAL AT JOB	UNLOADING TIME	AIR	CYLINDERS	

Tax
Prev. AMT
Ticket Total
Grand Total

ADDITIONAL CHARGE 1

ADDITIONAL CHARGE 2

GRAND TOTAL

Truck	Driver	User	Disp Ticket Num	Ticket ID	Time	Date
390126	559579	user	20011443	11414	10:12	4/11/18

RB 0020342

Load Size	Mix Code	Returned	Qty	Mix Age	Seq	Load ID
10.00 CYDS	CLSLS				D	23

Material	Design Qty	Required	Batched	% Var	% Moisture	Actual	Wt
CEMENT	417.00 lb	4173.00 lb	4154.00 lb	-0.38%			
FLYASH	143.00 lb	1430.00 lb	1446.00 lb	1.12%			
SAND	1333 lb	13342 lb	13200 lb	-1.06%	5.00% M	74 gl	
LIMESTONE	1346 lb	13469 lb	13400 lb	-0.51%	1.00% M	5 gl	
GRAVELSAT	1401 lb	14018 lb	13800 lb	-1.55%	1.00% M	6 gl	
WATER	262 lb	1577 gl	1577 lb	0.00%		189 gl	
502250	26.00 oz	260.00 oz	260.00 oz	0.00%			
AE-90	3.00 oz	30.00 oz	30.00 oz	0.00%			

Actual Num Batches: 1
Load 39135 lb Design W/C 0.450 Water/Cement 0.450 T Design 302.0 gl Actual 282.9 gl To Add 19.1 gl
Slump 5.00 in Water In Truck 0.0 gl Adjust Water 0.0 gl / Load Trim Water -2.0 gl / CYL
Actual W/C Ratio 0.422 Actual Water 283 gl Batched Cement 9600 lb Allowable Water 159 gl

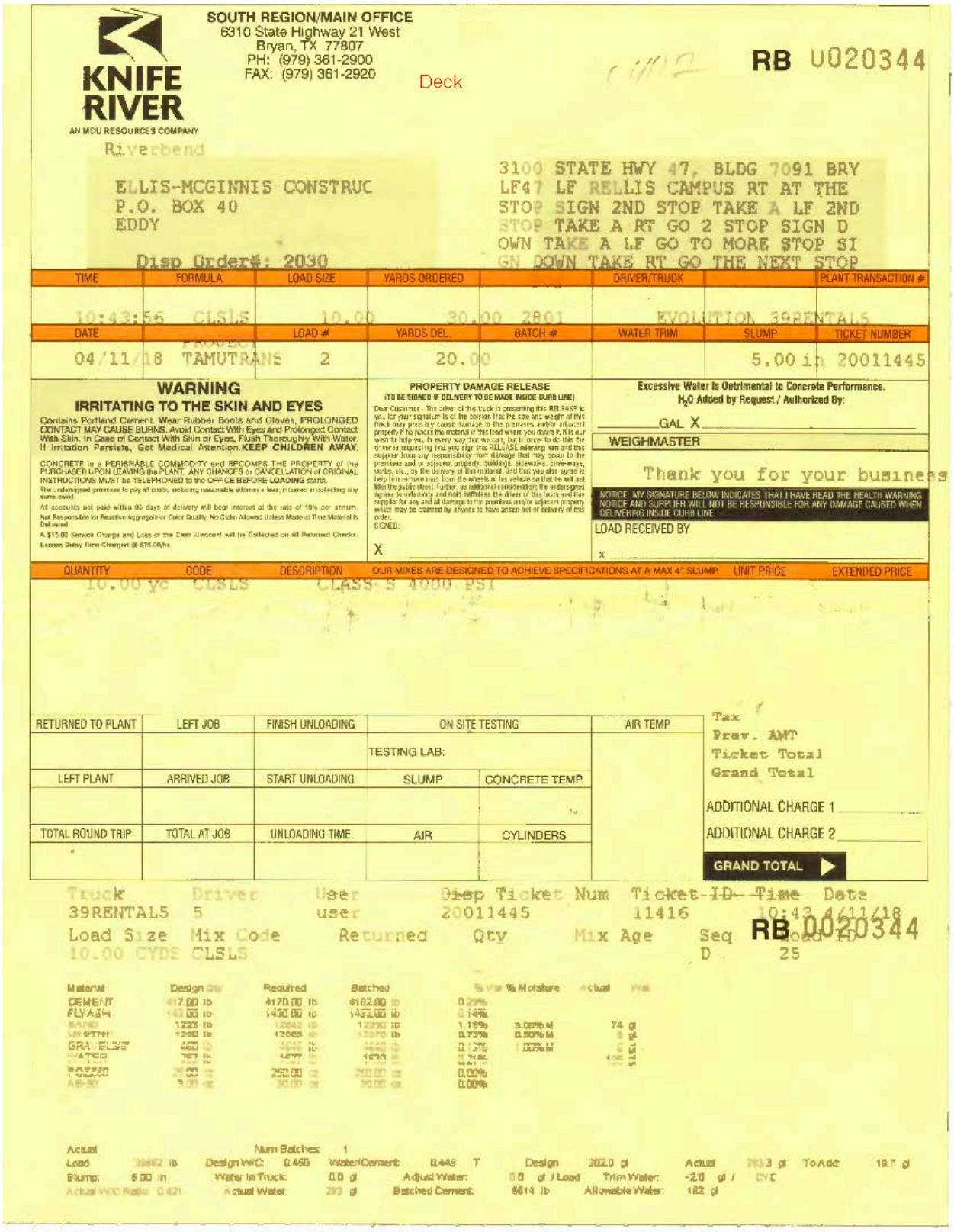

KNIFE RIVER
AN MDU RESOURCES COMPANY

SOUTH REGION/MAIN OFFICE
6310 State Highway 21 West
Bryan, TX 77807
PH: (979) 361-2900
FAX: (979) 361-2920

Deck

RB 0020344

Riverbend

ELLIS-MCGINNIS CONSTRUC
P.O. BOX 40
EDDY

3100 STATE HWY 47, BLDG 7091 BRY
LF47 LF RELLIS CAMPUS RT AT THE
STOP SIGN 2ND STOP TAKE A LF 2ND
STOP TAKE A RT GO 2 STOP SIGN D
OWN TAKE A LF GO TO MORE STOP SI
GN DOWN TAKE RT GO THE NEXT STOP

Disp Order#: 2030

TIME	FORMULA	LOAD SIZE	YARDS ORDERED		DRIVER/TRUCK		PLANT TRANSACTION #
10:43:56	CLSLS	10.00	30.00	2801	EVOLUTION 39RENTALS		
DATE		**LOAD #**	**YARDS DEL.**	**BATCH #**	**WATER TRIM**	**SLUMP**	**TICKET NUMBER**
04/11/18	TAMUTRANS	2	20.00			5.00 in	20011445

WARNING
IRRITATING TO THE SKIN AND EYES

Contains Portland Cement. Wear Rubber Boots and Gloves. PROLONGED CONTACT MAY CAUSE BURNS. Avoid Contact With Eyes and Prolonged Contact With Skin. In Case of Contact With Skin or Eyes, Flush Thoroughly With Water. If Irritation Persists, Get Medical Attention. **KEEP CHILDREN AWAY.**

CONCRETE is a PERISHABLE COMMODITY and BECOMES THE PROPERTY of the PURCHASER UPON LEAVING the PLANT. ANY CHANGES or CANCELLATION of ORIGINAL INSTRUCTIONS MUST be TELEPHONED to the OFFICE BEFORE **LOADING** starts.

The undersigned promises to pay all costs, including reasonable attorney's fees, incurred in collecting any sums owed.

All accounts not paid within 30 days of delivery will bear interest at the rate of 18% per annum.

Not Responsible for Reactive Aggregate or Color Quality. No Claim Allowed Unless Made at Time Material is Delivered.

A $15.00 Service Charge and Loss of the Cash Account will be Collected on all Returned Checks.

Excess Delay Time Charged @ $75.00/hr.

PROPERTY DAMAGE RELEASE
(TO BE SIGNED IF DELIVERY TO BE MADE INSIDE CURB LINE)

Dear Customer - The driver of this truck is presenting this RELEASE to you for your signature as the person that the size and weight of this truck may pose by cause damage to the premises and/or adjacent property if he places the material in the load where you desire it. It is our wish to help you. In every way that we can, but in order to do this the driver is requesting that you sign this RELEASE relieving him and this supplier from any responsibility from damage that may occur to the premises and or adjacent property, buildings, sidewalks, drive-ways, curbs, etc., by the delivery of this material, and that you also agree to help him remove mud from the wheels of his vehicle so that he will not litter the public street. Further, as additional consideration, the undersigned agrees to indemnify and hold harmless the driver of this truck and this supplier for any and all damage to the premises and/or adjacent property which may be claimed by anyone to have arisen out of delivery of this order.

SIGNED:

X

Excessive Water is Detrimental to Concrete Performance.
H_2O Added by Request / Authorized By:

GAL X

WEIGHMASTER

Thank you for your business

NOTICE: MY SIGNATURE BELOW INDICATES THAT I HAVE READ THE HEALTH WARNING NOTICE AND SUPPLIER WILL NOT BE RESPONSIBLE FOR ANY DAMAGE CAUSED WHEN DELIVERING INSIDE CURB LINE.

LOAD RECEIVED BY

x

QUANTITY	CODE	DESCRIPTION	UNIT PRICE	EXTENDED PRICE
10.00 yc	CLSLS	CLASS S 4000 PSI		

OUR MIXES ARE DESIGNED TO ACHIEVE SPECIFICATIONS AT A MAX 4" SLUMP

RETURNED TO PLANT	LEFT JOB	FINISH UNLOADING	ON SITE TESTING		AIR TEMP
			TESTING LAB:		
LEFT PLANT	ARRIVED JOB	START UNLOADING	SLUMP	CONCRETE TEMP.	
TOTAL ROUND TRIP	TOTAL AT JOB	UNLOADING TIME	AIR	CYLINDERS	

Tax
Prev. AMT
Ticket Total
Grand Total

ADDITIONAL CHARGE 1

ADDITIONAL CHARGE 2

GRAND TOTAL

Truck	Driver	User	Disp Ticket Num	Ticket-ID	Time	Date
39RENTAL5	5	user	20011445	11416	10:43	4/11/18

Load Size	Mix Code	Returned	Qty	Mix Age	Seq	RB 0020344
10.00 CYDS	CLSLS				D	25

Material	Design Qty	Required	Batched	% Var	% Moisture	Actual	Wet
CEMENT	417.00 lb	4170.00 lb	4182.00 lb	0.29%			
FLYASH	143.00 lb	1430.00 lb	1431.00 lb	0.14%			
SAND	1223 lb	12242 lb	12230 lb	1.18%	3.00% M	74 gl	
UNKNOWN	1360 lb	13605 lb	13570 lb	0.73%	0.00% M	0 gl	
GRAVEL#57	1600 lb	16000 lb	16000 lb	0.00%	1.00% M	0 gl	
WATER	767 lb	7677 lb	7670 lb	0.74%		436 gl	436 gl
ADMIX	26.00 oz	260.00 oz	260.00 oz	0.00%			
AE-90	3.00 oz	30.00 oz	30.00 oz	0.00%			

Actual Load	20012 lb	Num Batches:	1						
		Design W/C:	0.450	Water/Cement:	0.448	T	Design	302.0 gl	Actual	293.3 gl	To Add	18.7 gl
Slump:	5.00 in	Water in Truck:	0.0 gl	Adjust Water:	0.0 gl / Load		Trim Water:	-2.0 gl / CYC				
Actual W/C Ratio:	0.421	Actual Water:	293 gl	Batched Cement:	5614 lb		Allowable Water:	162 gl				

KNIFE RIVER
AN MDU RESOURCES COMPANY

SOUTH REGION/MAIN OFFICE
6310 State Highway 21 West
Bryan, TX 77807
PH: (979) 361-2900
FAX: (979) 361-2920

Deck

RB 0020345

Riverbend

ELLIS-MCGINNIS CONSTRUC
P.O. BOX 40
EDDY

3100 STATE HWY 47, BLDG 7091 BRY
LF47 LF RELLIS CAMPUS RT AT THE
STOP SIGN 2ND STOP TAKE A LF 2ND
STOP TAKE A RT GO 2 STOP SIGN D
OWN TAKE A LF GO TO MORE STOP SI
GN DOWN TAKE RT GO THE NEXT STOP

Disp Order#: 2030

TIME	FORMULA	LOAD SIZE	YARDS ORDERED		DRIVER/TRUCK		PLANT TRANSACTION #
11:09:20	CLSLS	10.00	30.00	2801	ROLANDO T 390148		
DATE		**LOAD #**	**YARDS DEL.**	**BATCH #**	**WATER TRIM**	**SLUMP**	**TICKET NUMBER**
04/11/18	TAMUTRANS	3	30.00			5.00 in	20011446

WARNING
IRRITATING TO THE SKIN AND EYES
Contains Portland Cement. Wear Rubber Boots and Gloves, PROLONGED CONTACT MAY CAUSE BURNS. Avoid Contact With Eyes and Prolonged Contact With Skin. In Case of Contact With Skin or Eyes, Flush Thoroughly With Water. If Irritation Persists, Get Medical Attention.KEEP CHILDREN AWAY.

CONCRETE is a PERISHABLE COMMODITY and BECOMES THE PROPERTY of the PURCHASER UPON LEAVING the PLANT. ANY CHANGES or CANCELLATION of ORIGINAL INSTRUCTIONS MUST be TELEPHONED to the OFFICE BEFORE LOADING starts. The undersigned promises to pay all costs, including reasonable attorneys fees, incurred in collecting any sums owed.

All accounts not paid within 30 days of delivery will bear interest at the rate of 18% per annum. Not Responsible for Relative Aggregate or Color Quality. No Claim Allowed Unless Made at Time Material is Delivered.

A $15.00 Service Charge and Loss of Cash Discount will be Collected on all Returned Checks. Extra Delay Time Charged @ $75.00/hr

PROPERTY DAMAGE RELEASE
(TO BE SIGNED IF DELIVERY TO BE MADE INSIDE CURB LINE)

Dear Customer: The driver of this truck in presenting this RELEASE to you for your signature is of the opinion that the size and weight of this truck may possibly cause damage to the premises and/or adjacent property if he places the material in the load where you desire it. It is our wish to help you. In every way that we can, but in order to do this the driver is requesting that you sign this RELEASE releasing him and this supplier from any responsibility from damage that may occur in the premises and or adjacent property, sidewalks, driveways, curbs, etc., by the delivery of this material, and that you also agree to help him remove mud from the wheels of his vehicle so that it will not litter the public street. Further, as additional consideration, the undersigned agrees to indemnify and hold harmless the driver of this truck and this supplier for any and all damage to the premises and/or adjacent property which may be claimed by anyone to have been caused by delivery of this order.

SIGNED:

X

Excessive Water is Detrimental to Concrete Performance.
H_2O Added by Request / Authorized By:

5 GAL X

WEIGHMASTER

Thank you for your business

NOTICE: MY SIGNATURE BELOW INDICATES THAT I HAVE READ THE HEALTH WARNING NOTICE AND SUPPLIER WILL NOT BE RESPONSIBLE FOR ANY DAMAGE CAUSED WHEN DELIVERIES INSIDE CURB LINE

LOAD RECEIVED BY

X

QUANTITY	CODE	DESCRIPTION	OUR MIXES ARE DESIGNED TO ACHIEVE SPECIFICATIONS AT A MAX 4" SLUMP	UNIT PRICE	EXTENDED PRICE
10.00 yd	CLSLS	CLASS S 4000 PSI			

RETURNED TO PLANT	LEFT JOB	FINISH UNLOADING	ON SITE TESTING		AIR TEMP
		118	TESTING LAB:		
LEFT PLANT	**ARRIVED JOB**	**START UNLOADING**	**SLUMP**	**CONCRETE TEMP**	
1114	1135	1205			
TOTAL ROUND TRIP	**TOTAL AT JOB**	**UNLOADING TIME**	**AIR**	**CYLINDERS**	

Tax
Prev. AMT
Ticket Total
Grand Total

ADDITIONAL CHARGE 1 _____

ADDITIONAL CHARGE 2 _____

GRAND TOTAL ▶

Truck	Driver	User	Disp Ticket Num	Ticket ID	Time	Date
390148	548533	user	20011446	11417	11:09	4/11/18

Load Size 10.00 CYDS | Mix Code CLSLS | Returned | Qty | Mix Age | Seq D | Load ID 26

RB 0020345

Material	Design Qty	Required	Batched	% Var	% Moisture	Actual	Wat
CEMENT	417.00 lb	4170.00 lb	4192.00 lb	0.53%			
FLYASH	143.00 lb	1430.00 lb	1436.00 lb	0.42%			
SAND	1223 lb	12942 lb	13010 lb	1.31%	5.00% M	74 gl	
LMSTN1"	1360 lb	13355 lb	13330 lb	0.44%	0.50% M	5 gl	
GRAVEL3/8"	460 lb	4645 lb	5060 lb	8.91%	1.00% M	5 gl	
WATER	252 lb	1627 lb	1635 lb	-0.04%		196 gl	
POZZ93	26.00 oz	260.00 oz	262.00 oz	0.53%			
AE-90	3.00 oz	30.00 oz	30.00 oz	0.00%			

Actual
Num Batches: 1
Load 39252 lb | Design W/C: 0.450 | Water/Cement: 0.449 T | Design: 302.0 gl | Actual: 293.4 gl | To Add: 16.6 gl
Slump: 5.00 in | Water In Truck: 0.0 gl | Adjust Water: 0.0 gl / Load | Trim Water: -2.0 gl / CYD
Actual W/C Ratio: 0.421 | Actual Water: 283 gl | Batched Cement: 6619 lb | Allowable Water: 193 gl

A.3 *MASH* TEST 4-10 (CRASH TEST NO. 469468-1-1)

A.3.1 Vehicle Properties and Information

Table A.1. Vehicle Properties for Test No. 469468-1-1.

Date: 2018-05-17 Test No.: 469468-1-1 VIN No.: KNADH4A36A6635391

Year: 2010 Make: KIA Model: RIO

Tire Inflation Pressure: 32 PSI Odometer: 105807 Tire Size: 185/65R14

Describe any damage to the vehicle prior to test: None

● Denotes accelerometer location.

NOTES: None

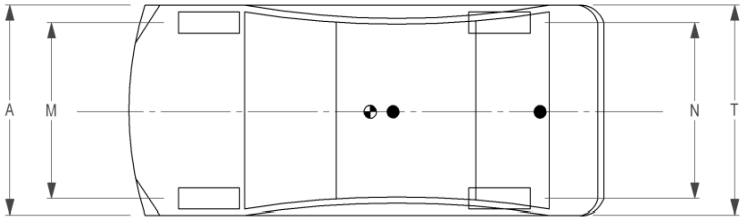

Engine Type: 4 cylinder
Engine CID: 1.6 L
Transmission Type:
☑ Auto or ☐ Manual
☑ FWD ☐ RWD ☐ 4WD
Optional Equipment:
None

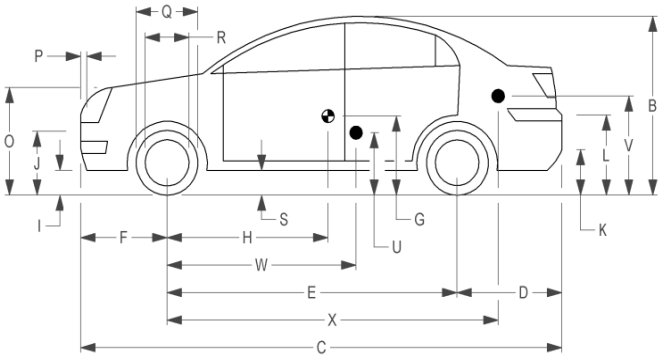

Dummy Data:
Type: 50th percentile male
Mass: 165 lb
Seat Position: IMPACT SIDE

Geometry: inches

A	66.38	F	33.00	K	12.25	P	4.12	U	14.75
B	51.50	G		L	25.25	Q	22.50	V	19.50
C	165.75	H	35.75	M	57.75	R	15.50	W	35.75
D	34.00	I	7.75	N	57.70	S	8.25	X	107.00
E	98.75	J	21.50	O	28.25	T	66.20		
	Wheel Center Ht Front		11.00		Wheel Center Ht Rear		11.00	W-H	0.00

RANGE LIMIT: A = 65 ±3 inches; C = 169±8 inches; E = 98 ±5 inches; F = 35 ±4 inches; H = 39 ±4 inches; O = TOP OF RADIATOR SUPPORT ~~(24 ±4 inches)~~; M+N/2 = 56 ±2 inches; W-H < 2 inches or use MASH Paragraph A4.3.2

GVWR Ratings:		**Mass:** lb	Curb	Test Inertial	Gross Static
Front	1718	M_{front}	1567	1547	1632
Back	1874	M_{rear}	884	878	958
Total	3638	M_{Total}	2451	2425	2590

Allowable TIM = 2420 lb ±55 lb | Allowable GSM = 2585 lb ± 55 lb

Mass Distribution:
lb LF: 771 RF: 776 LR: 422 RR: 456

Table A.2. Exterior Crush Measurements of Vehicle for Test No. 469468-1-1.

Date: 2018-05-17 Test No.: 469468-1-1 VIN No.: KNADH4A36A6635391

Year: 2010 Make: KIA Model: RIO

VEHICLE CRUSH MEASUREMENT SHEET[1]

Complete When Applicable	
End Damage	Side Damage
Undeformed end width _____	Bowing: B1 _____ X1 _____
Corner shift: A1 _____	B2 _____ X2 _____
A2 _____	
End shift at frame (CDC)	Bowing constant
(check one)	$\frac{X1+X2}{2}$ = _____
< 4 inches _____	
≥ 4 inches _____	

Note: Measure C_1 to C_6 from Driver to Passenger Side in Front or Rear impacts – Rear to Front in Side Impacts.

Specific Impact Number	Plane* of C-Measurements	Direct Damage		Field L**	C_1	C_2	C_3	C_4	C_5	C_6	±D
		Width** (CDC)	Max*** Crush								
1	AT FT BUMPER	24	6	26	6	5	4	2.5	1	0	-8
2	ABOVE FT BUMPER	24	8	40	1	3	5	6	6.5	8	+60
	Units in inches										

[1]Table taken from National Accident Sampling System (NASS).

*Identify the plane at which the C-measurements are taken (e.g., at bumper, above bumper, at sill, above sill, at beltline, etc.) or label adjustments (e.g., free space).

Free space value is defined as the distance between the baseline and the original body contour taken at the individual C locations. This may include the following: bumper lead, bumper taper, side protrusion, side taper, etc. Record the value for each C-measurement and maximum crush.

**Measure and document on the vehicle diagram the beginning or end of the direct damage width and field L (e.g., side damage with respect to undamaged axle).

***Measure and document on the vehicle diagram the location of the maximum crush.

Note: Use as many lines/columns as necessary to describe each damage profile.

Table A.3. Occupant Compartment Measurements of Vehicle for Test No. 469468-1-1.

Date:	2018-05-17	Test No.:	469468-1-1	VIN No.:	KNADH4A36A6635391
Year:	2010	Make:	KIA	Model:	RIO

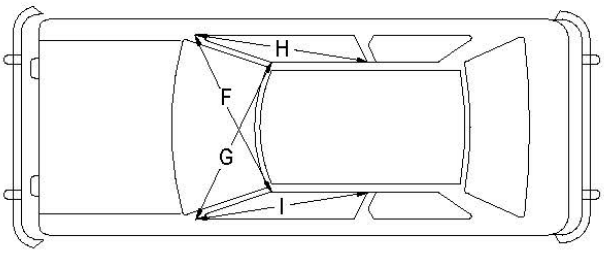

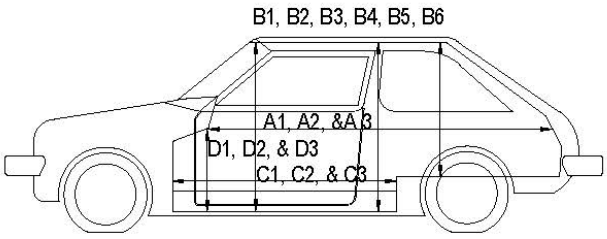

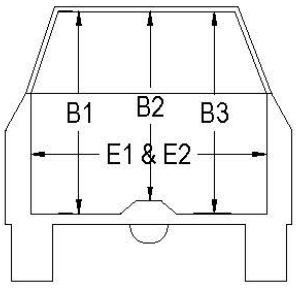

OCCUPANT COMPARTMENT DEFORMATION MEASUREMENT

	Before	After	Differ.
	inches		
A1	67.50	67.50	0.00
A2	67.25	67.25	0.00
A3	67.75	67.75	0.00
B1	40.50	38.00	-2.50
B2	39.00	39.00	0.00
B3	40.50	40.50	0.00
B4	36.25	36.25	0.00
B5	36.00	36.00	0.00
B6	36.25	36.25	0.00
C1	26.00	25.00	-1.00
C2	0.00	0.00	0.00
C3	26.00	26.00	0.00
D1	9.50	7.00	-2.50
D2	0.00	0.00	0.00
D3	9.50	9.50	0.00
E1	51.50	53.50	2.00
E2	51.00	53.50	2.50
F	51.00	51.00	0.00
G	51.00	51.00	0.00
H	37.50	37.50	0.00
I	37.50	37.50	0.00
J*	51.00	49.75	-1.25

*Lateral area across the cab from
driver's side kickpanel to passenger's side kickpanel.

A.3.2 Sequential Photographs

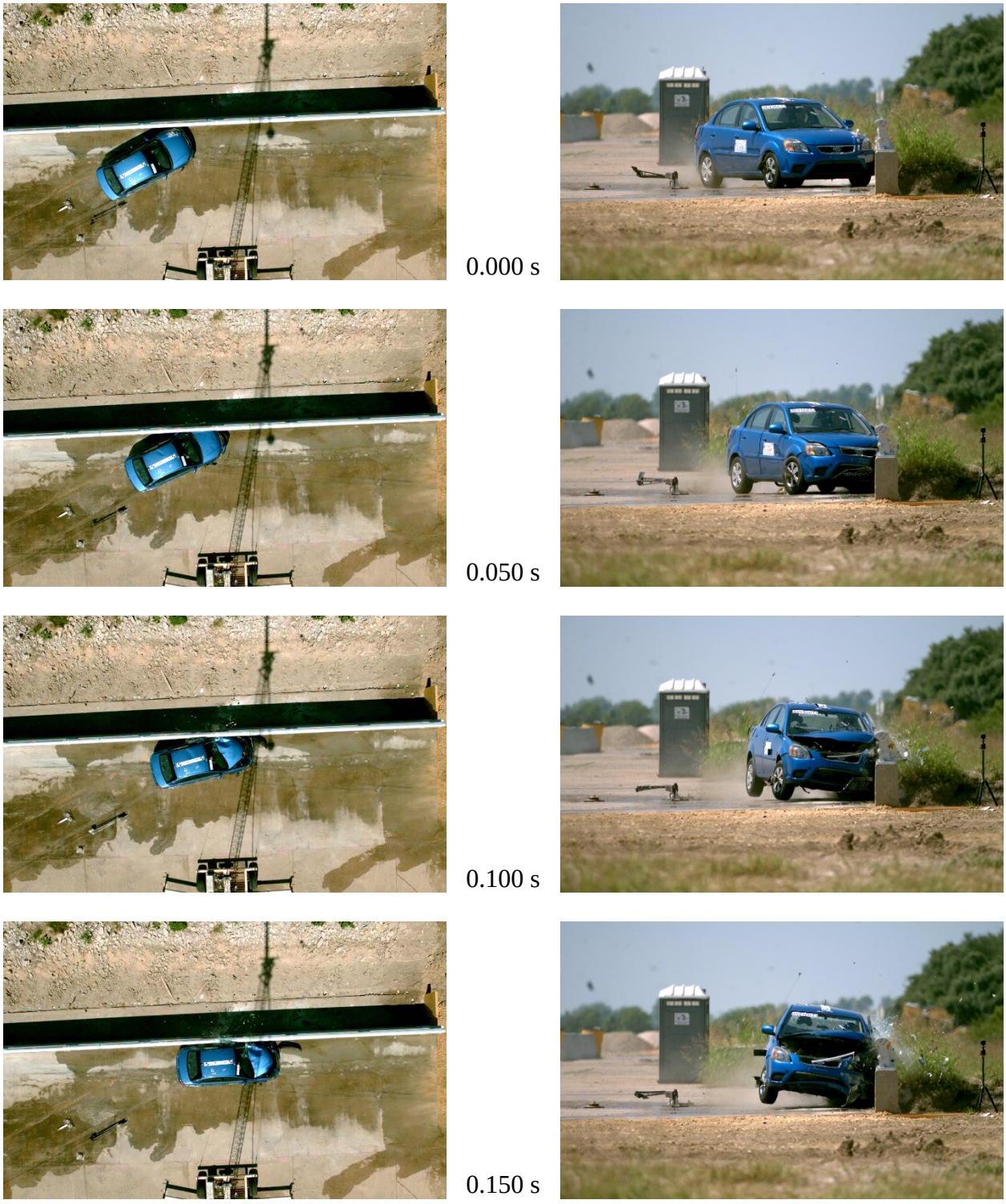

Figure A.1. Sequential Photographs for Test No. 469468-1-1 (Overhead and Frontal Views).



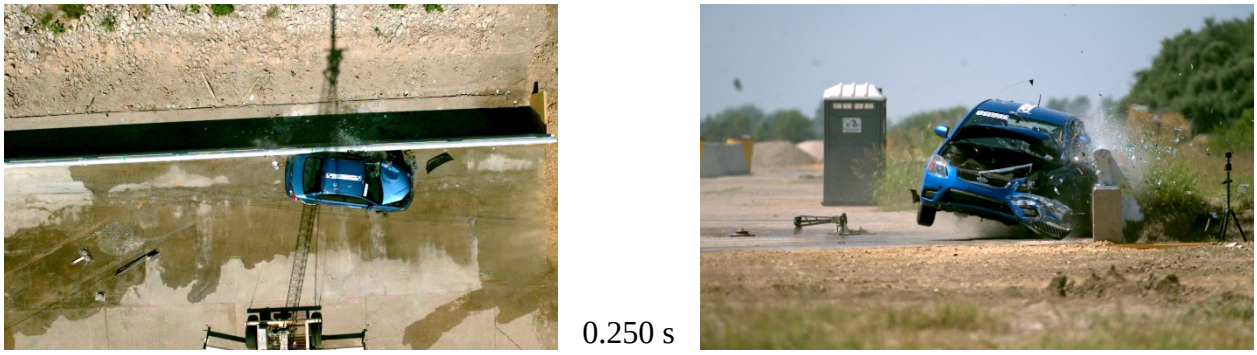

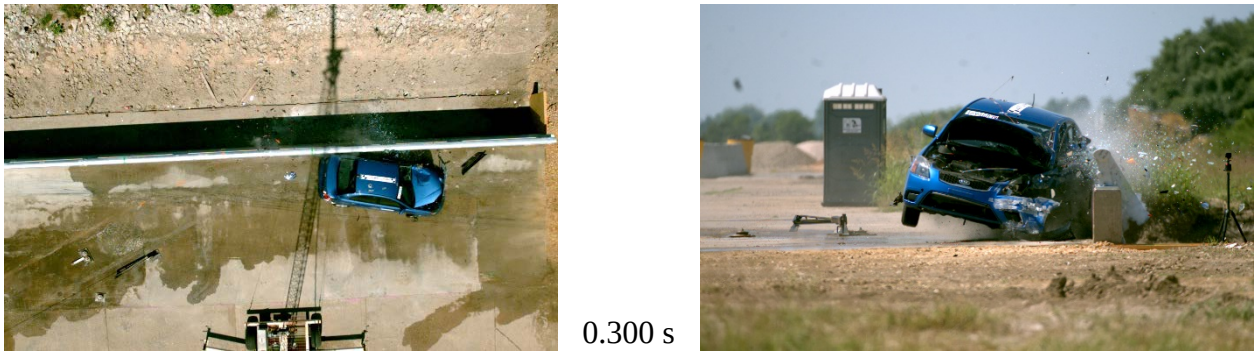



Figure A.1. Sequential Photographs for Test No. 469468-1-1 (Overhead and Frontal Views) (Continued).


0.000 s


0.200 s


0.050 s


0.250 s


0.100 s


0.300 s


0.150 s


0.350 s

Figure A.2. Sequential Photographs for Test No. 469468-1-1 (Rear View).

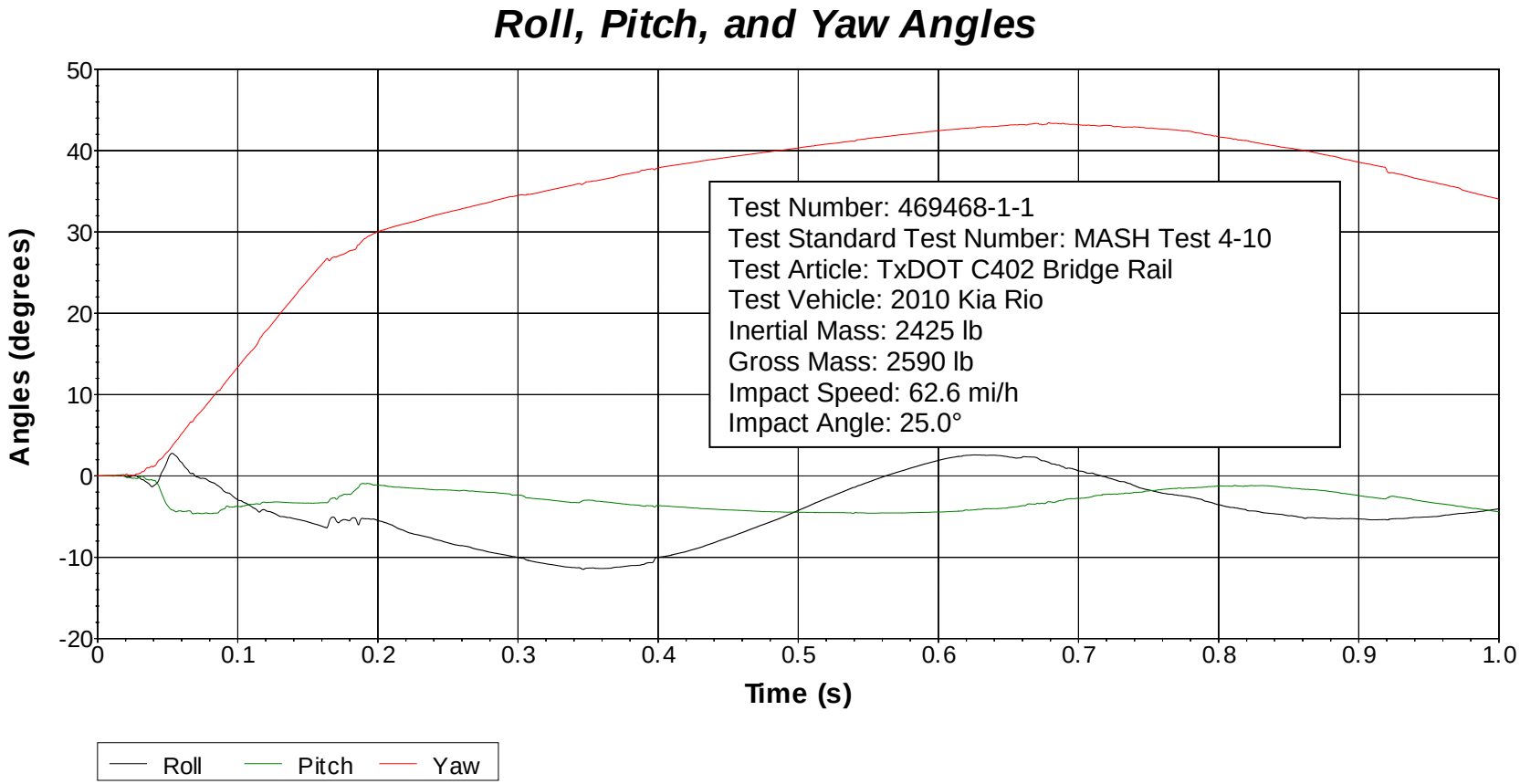

Axes are vehicle-fixed.
Sequence for determining orientation:

1. Yaw.
2. Pitch.
3. Roll.

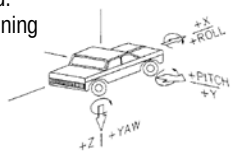

Figure A.3. Vehicle Angular Displacements for Test No. 469468-1-1.

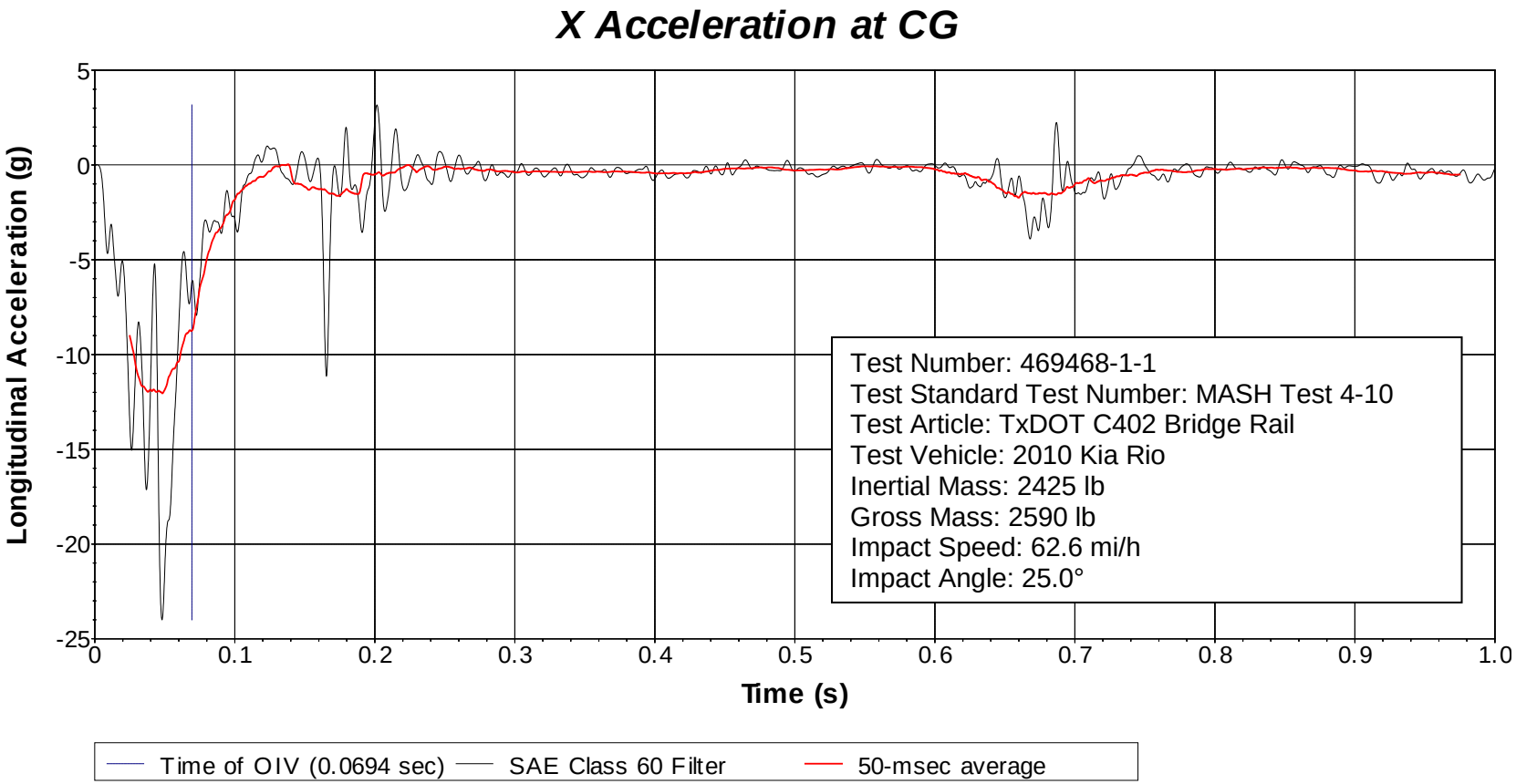

Figure A.4. Vehicle Longitudinal Accelerometer Trace for Test No. 469468-1-1 (Accelerometer Located at Center of Gravity).

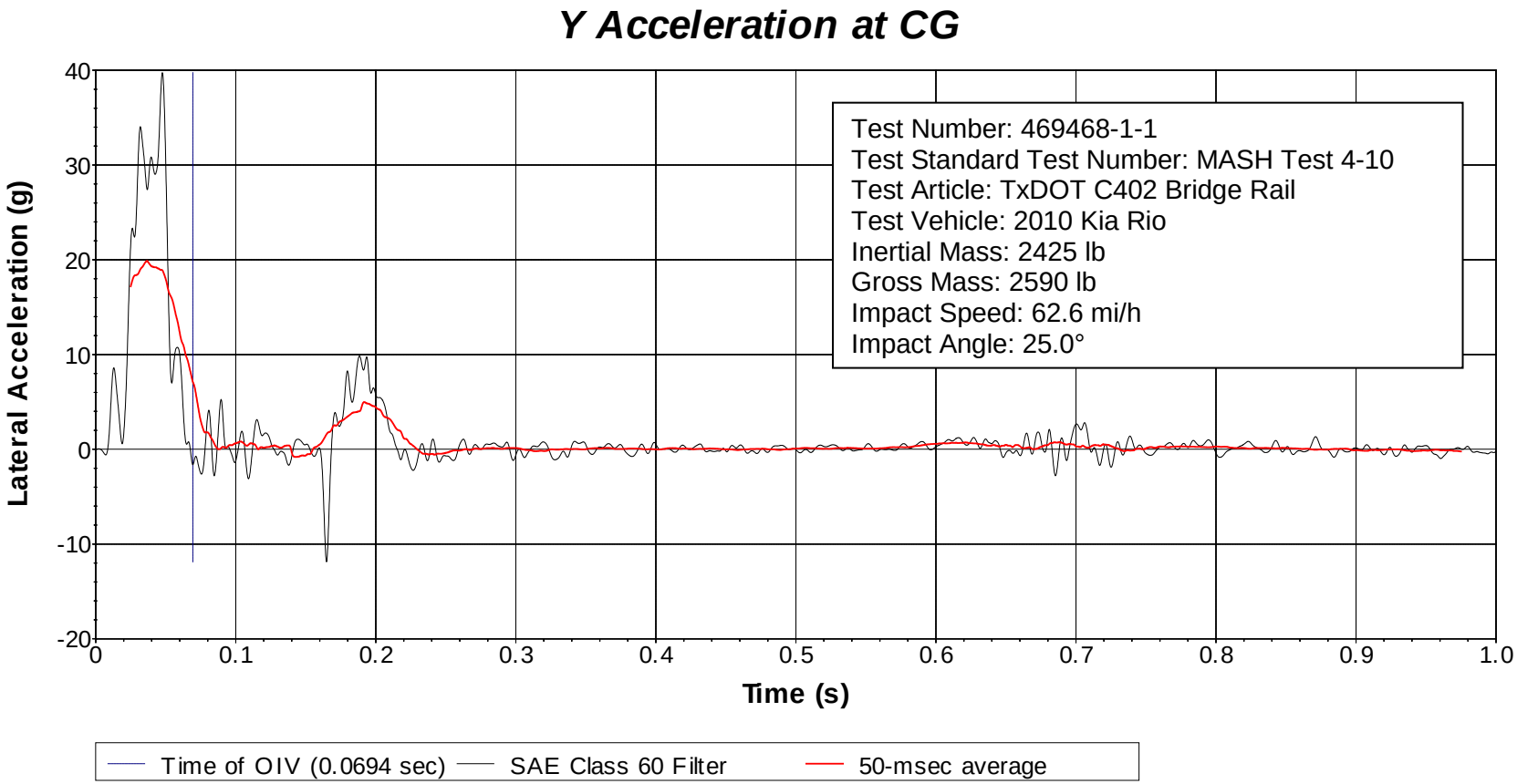

Figure A.5. Vehicle Lateral Accelerometer Trace for Test No. 469468-1-1 (Accelerometer Located at Center of Gravity).

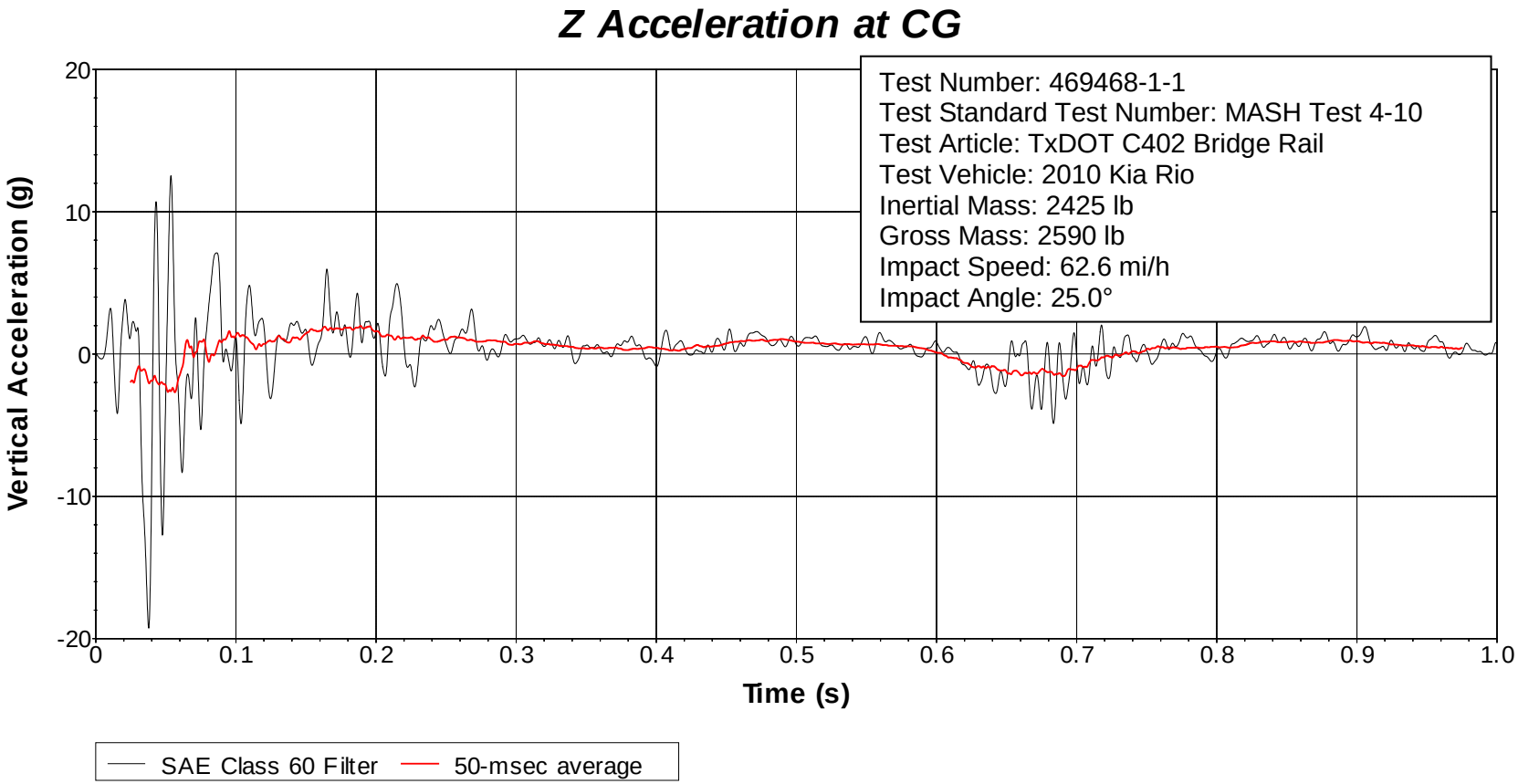

Figure A.6. Vehicle Vertical Accelerometer Trace for Test No. 469468-1-1 (Accelerometer Located at Center of Gravity).

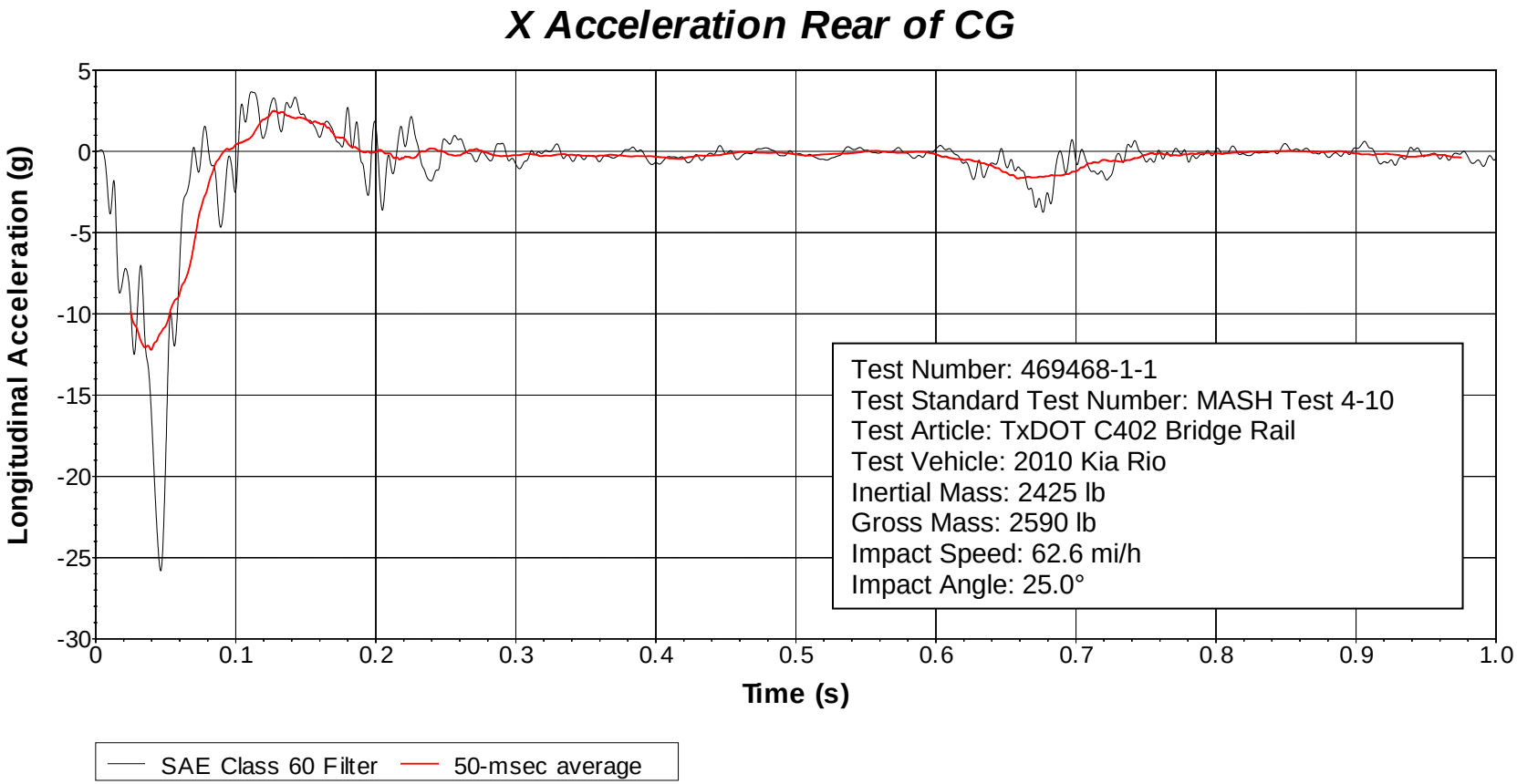

Figure A.7. Vehicle Longitudinal Accelerometer Trace for Test No. 469468-1-1 (Accelerometer Located Rear of Center of Gravity).

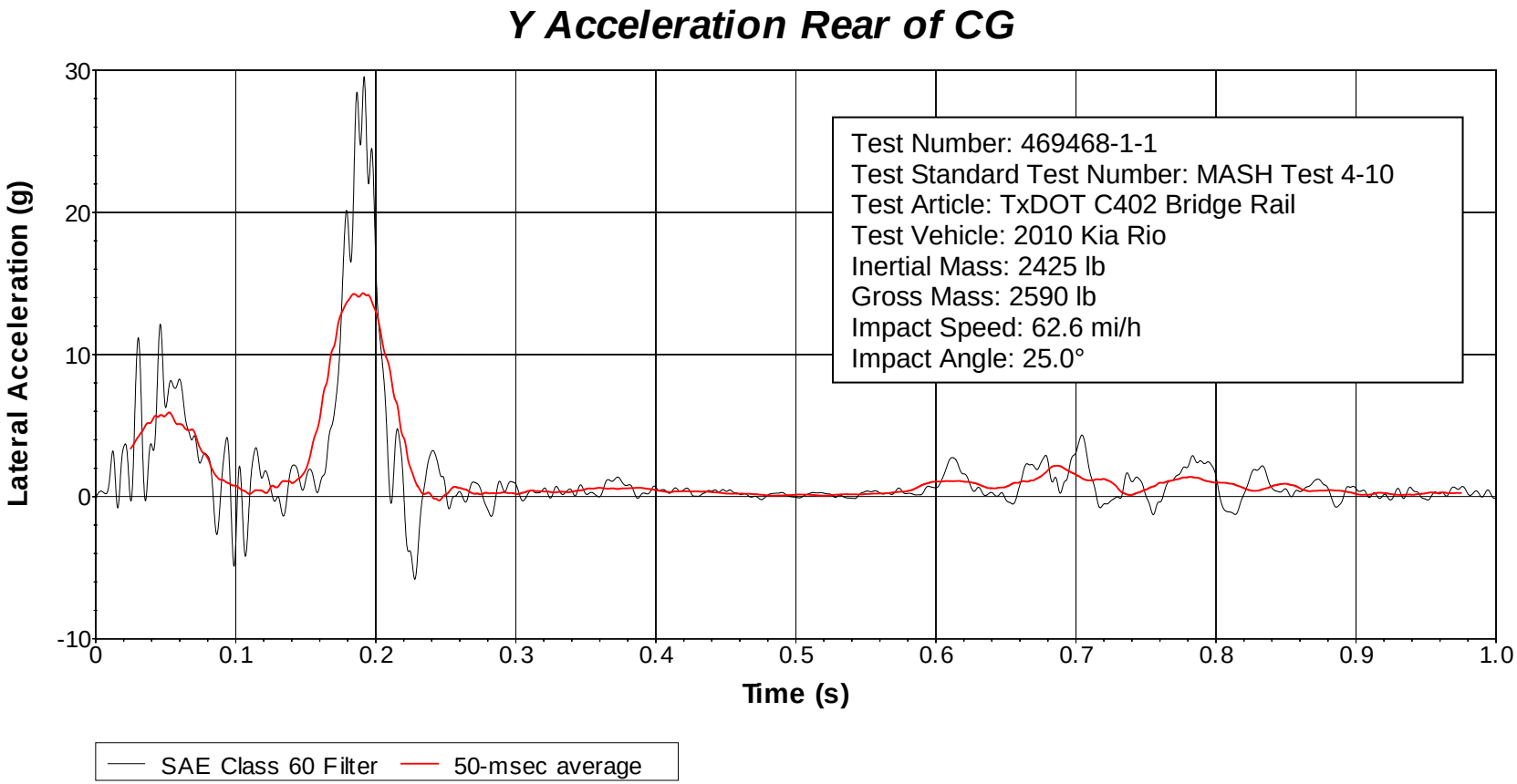

Figure A.8. Vehicle Lateral Accelerometer Trace for Test No. 469468-1-1 (Accelerometer Located Rear of Center of Gravity).

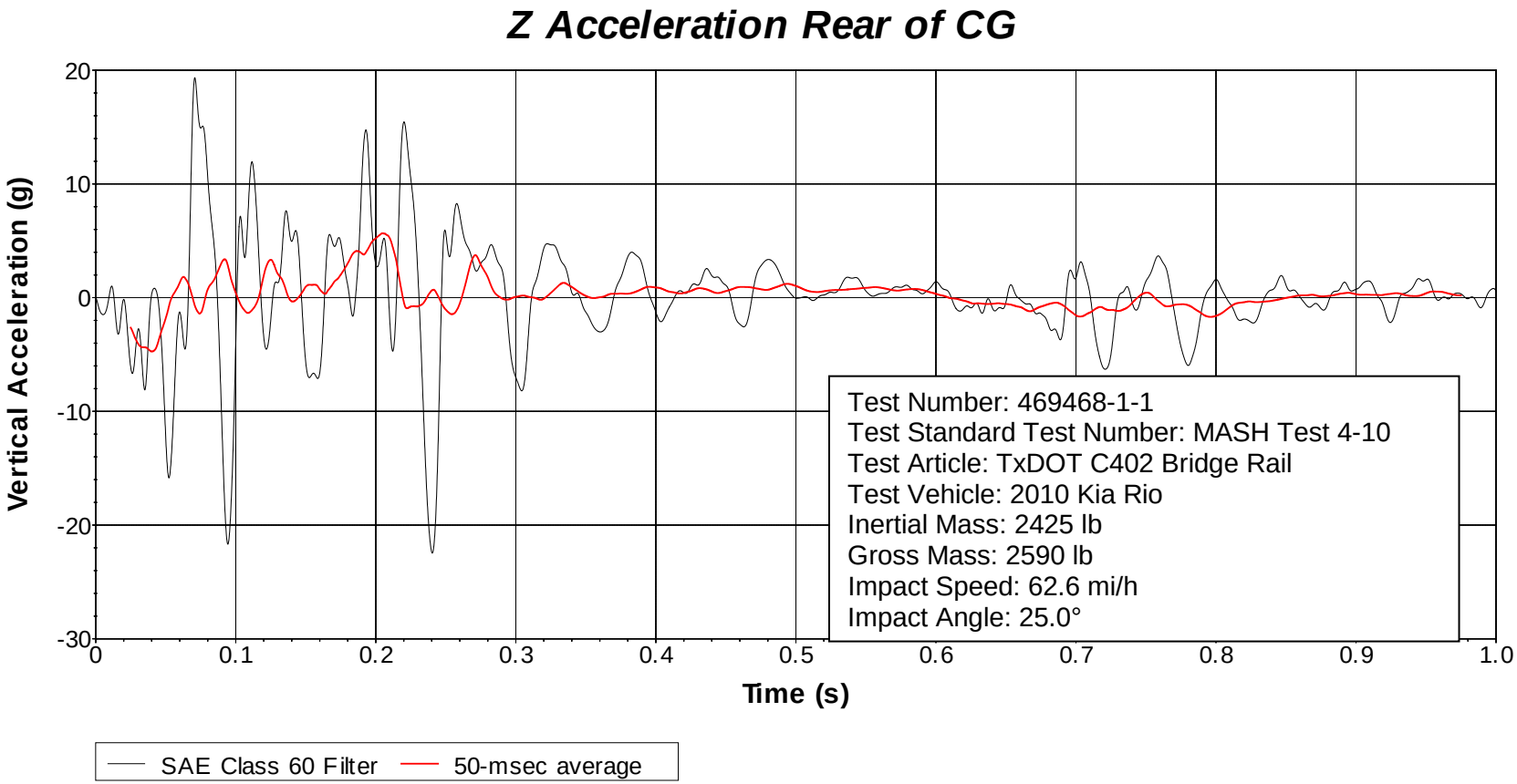

Figure A.9. Vehicle Vertical Accelerometer Trace for Test No. 469468-1-1 (Accelerometer Located Rear of Center of Gravity).

A.4 *MASH* TEST 4-11 (CRASH TEST NO. 469468-1-2)

A.4.1 Vehicle Properties and Information

Table A.4. Vehicle Properties for Test No. 469468-1-2.

Date: 2018-5-15 Test No.: 469468-1-2 VIN No.: 1C6RD6FT5CS237129

Year: 2012 Make: DODGE Model: RAM 1500

Tire Size: 265/70 R 17 Tire Inflation Pressure: 35 PSI

Tread Type: HIGHWAY Odometer: 166403

Note any damage to the vehicle prior to test: None

• Denotes accelerometer location.

NOTES: None

Engine Type: V-8
Engine CID: 4.7 L

Transmission Type:
☑ Auto or ☐ Manual
☐ FWD ☑ RWD ☐ 4WD

Optional Equipment:
None

Dummy Data:
Type: 50th percentile male
Mass: 165 lb
Seat Position: Driver/Impact side

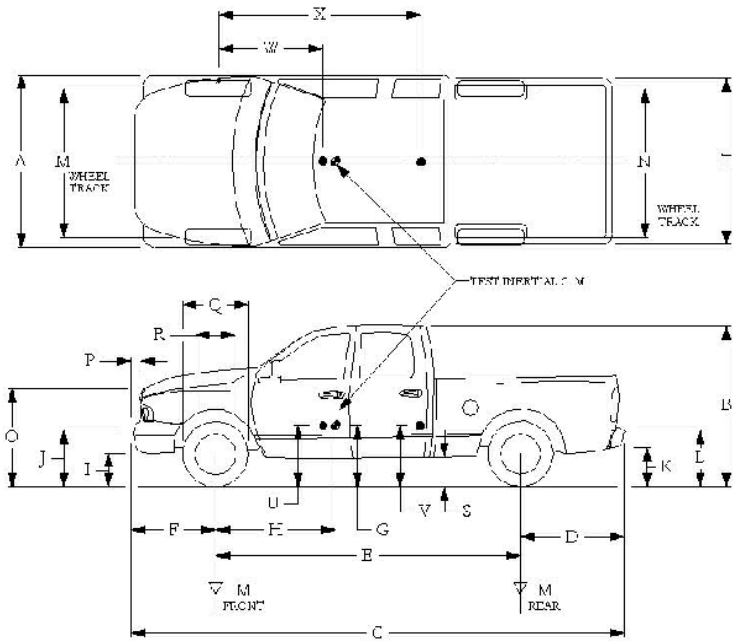

Geometry: inches

A	78.50	F	40.00	K	20.00	P	3.00	U	27.00		
B	74.00	G	28.00	L	30.00	Q	30.50	V	30.25		
C	227.50	H	61.20	M	68.50	R	18.00	W	61.20		
D	44.00	I	11.75	N	68.00	S	13.00	X	77.50		
E	140.50	J	27.00	O	46.00	T	77.00				

Wheel Center Height Front	14.75	Wheel Well Clearance (Front)	6.00	Bottom Frame Height - Front	12.00
Wheel Center Height Rear	14.75	Wheel Well Clearance (Rear)	9.25	Bottom Frame Height - Rear	25.50

RANGE LIMIT: A=78 ±2 inches; C=237 ±13 inches; E=148 ±12 inches; F=39 ±3 inches; G = > 28 inches; H = 63 ±4 inches; O=43 ±4 inches; M+N/2=67 ±1.5 inches

GVWR Ratings:		**Mass:** lb	Curb	Test Inertial	Gross Static
Front	3700	M_{front}	2824	2819	2904
Back	3900	M_{rear}	1964	2180	2260
Total	6700	M_{Total}	4788	4999	5164

(Allowable Range for TIM and GSM = 5000 lb ±110 lb)

Mass Distribution:
lb LF: 1401 RF: 1418 LR: 1077 RR: 1103

Table A.5. Measurements of Vehicle Vertical CG for Test No. 469468-1-2.

Date: 2018-5-15 Test No.: 469468-1-2 VIN: 1C6RD6FT5CS237129

Year: 2012 Make: DODGE Model: RAM 1500

Body Style: QUAD CAB Mileage: 166403

Engine: 4.7L V-8 Transmission: AUTO

Fuel Level: EMPTY Ballast: 190 LBS (440 lb max)

Tire Pressure: Front: 35 psi Rear: 35 psi Size: 265/70 R 17

Measured Vehicle Weights: (lb)

LF:	1401	RF:	1418	Front Axle:	2819
LR:	1077	RR:	1103	Rear Axle:	2180
Left:	2478	Right:	2521	Total:	4999
					5000 ±110 lb allowed

Wheel Base: 140.50 inches (148 ±12 inches allowed) Track: F: 68.50 inches R: 68.00 inches (Track = (F+R)/2 = 67 ±1.5 inches allowed)

Center of Gravity, SAE J874 Suspension Method

X:	61.27 inches	Rear of Front Axle	(63 ±4 inches allowed)
Y:	0.29 inches	Left - Right +	of Vehicle Centerline
Z:	28.00 inches	Above Ground	(minumum 28.0 inches allowed)

Hood Height: 46.00 inches (43 ±4 inches allowed) Front Bumper Height: 27.00 inches

Front Overhang: 40.00 inches (39 ±3 inches allowed) Rear Bumper Height: 30.00 inches

Overall Length: 227.50 inches (237 ±13 inches allowed)

Table A.6. Exterior Crush Measurements of Vehicle for Test No. 469468-1-2.

Date: 2018-5-15 Test No.: 469468-1-2 VIN No.: 1C6RD6FT5CS237129

Year: 2012 Make: DODGE Model: RAM 1500

VEHICLE CRUSH MEASUREMENT SHEET[1]

Complete When Applicable	
End Damage	Side Damage
Undeformed end width _____	Bowing: B1 _____ X1 _____
Corner shift: A1 _____	B2 _____ X2 _____
A2 _____	
End shift at frame (CDC)	Bowing constant
(check one)	$\frac{X1+X2}{2}$ = _____
< 4 inches _____	
≥ 4 inches _____	

Note: Measure C_1 to C_6 from Driver to Passenger Side in Front or Rear impacts – Rear to Front in Side Impacts.

Specific Impact Number	Plane* of C-Measurements	Direct Damage		Field L**	C_1	C_2	C_3	C_4	C_5	C_6	±D
		Width** (CDC)	Max*** Crush								
1	AT FT BUMPER	22	8	16	8	4	2				-17
2	ABOVE FT BUNPER	22	10	44	2	4	6	7	9.5	10	+80
	inches										

[1]Table taken from National Accident Sampling System (NASS).

*Identify the plane at which the C-measurements are taken (e.g., at bumper, above bumper, at sill, above sill, at beltline, etc.) or label adjustments (e.g., free space).

Free space value is defined as the distance between the baseline and the original body contour taken at the individual C locations. This may include the following: bumper lead, bumper taper, side protrusion, side taper, etc. Record the value for each C-measurement and maximum crush.

**Measure and document on the vehicle diagram the beginning or end of the direct damage width and field L (e.g., side damage with respect to undamaged axle).

***Measure and document on the vehicle diagram the location of the maximum crush.

Note: Use as many lines/columns as necessary to describe each damage profile.

Table A.7. Occupant Compartment Measurements of Vehicle for Test No. 469468-1-2.

Date:	2018-5-15	Test No.:	469468-1-2	VIN No.:	1C6RD6FT5CS237129
Year:	2012	Make:	DODGE	Model:	RAM 1500

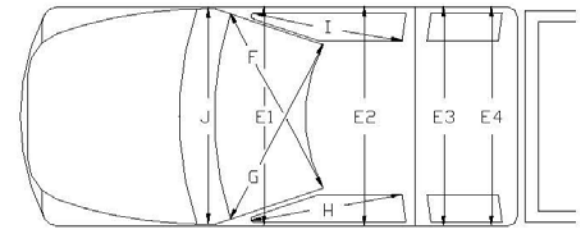

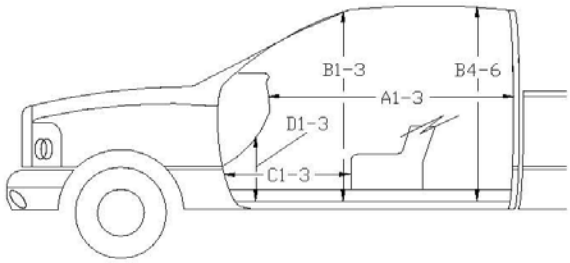

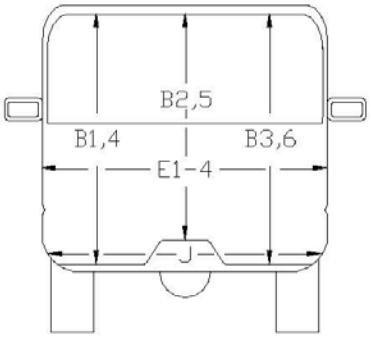

*Lateral area across the cab from driver's side kickpanel to passenger's side kickpanel.

OCCUPANT COMPARTMENT DEFORMATION MEASUREMENT

	Before	After (inches)	Differ.
A1	65.00	64.50	-0.50
A2	63.00	63.00	0.00
A3	65.50	65.50	0.00
B1	45.00	45.00	0.00
B2	38.00	38.00	0.00
B3	45.00	45.00	0.00
B4	39.50	39.50	0.00
B5	43.00	43.00	0.00
B6	39.50	39.50	0.00
C1	26.00	25.00	-1.00
C2	0.00	0.00	0.00
C3	26.00	26.00	0.00
D1	11.00	10.75	-0.25
D2	0.00	0.00	0.00
D3	11.50	11.50	0.00
E1	58.50	60.50	2.00
E2	63.50	67.00	3.50
E3	63.50	63.50	0.00
E4	63.50	63.50	0.00
F	59.00	59.00	0.00
G	59.00	59.00	0.00
H	37.50	37.50	0.00
I	37.50	37.50	0.00
J*	25.00	24.00	-1.00

A.4.2 Sequential Photographs

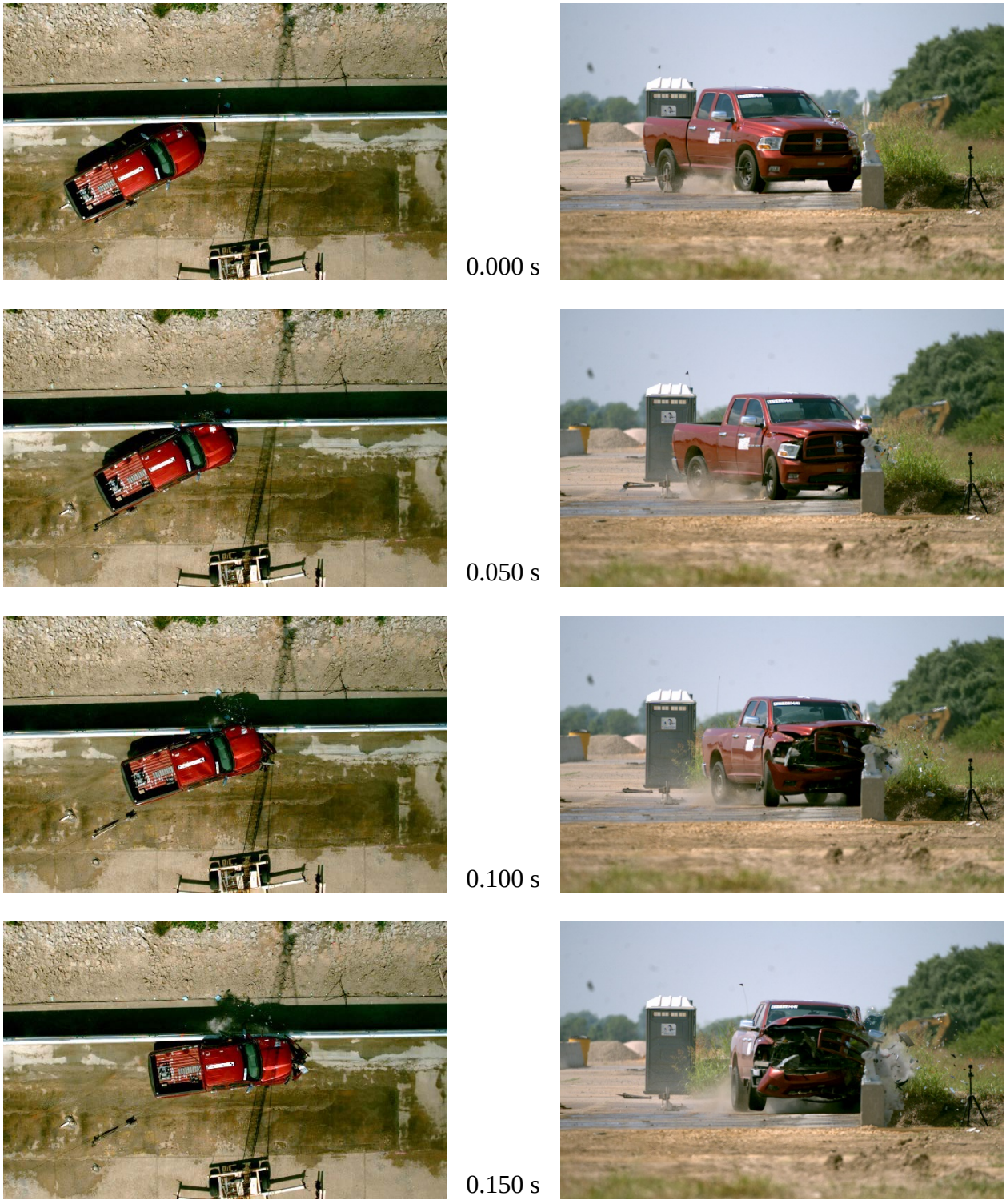

Figure A.10. Sequential Photographs for Test No. 469468-1-2 (Overhead and Frontal Views).

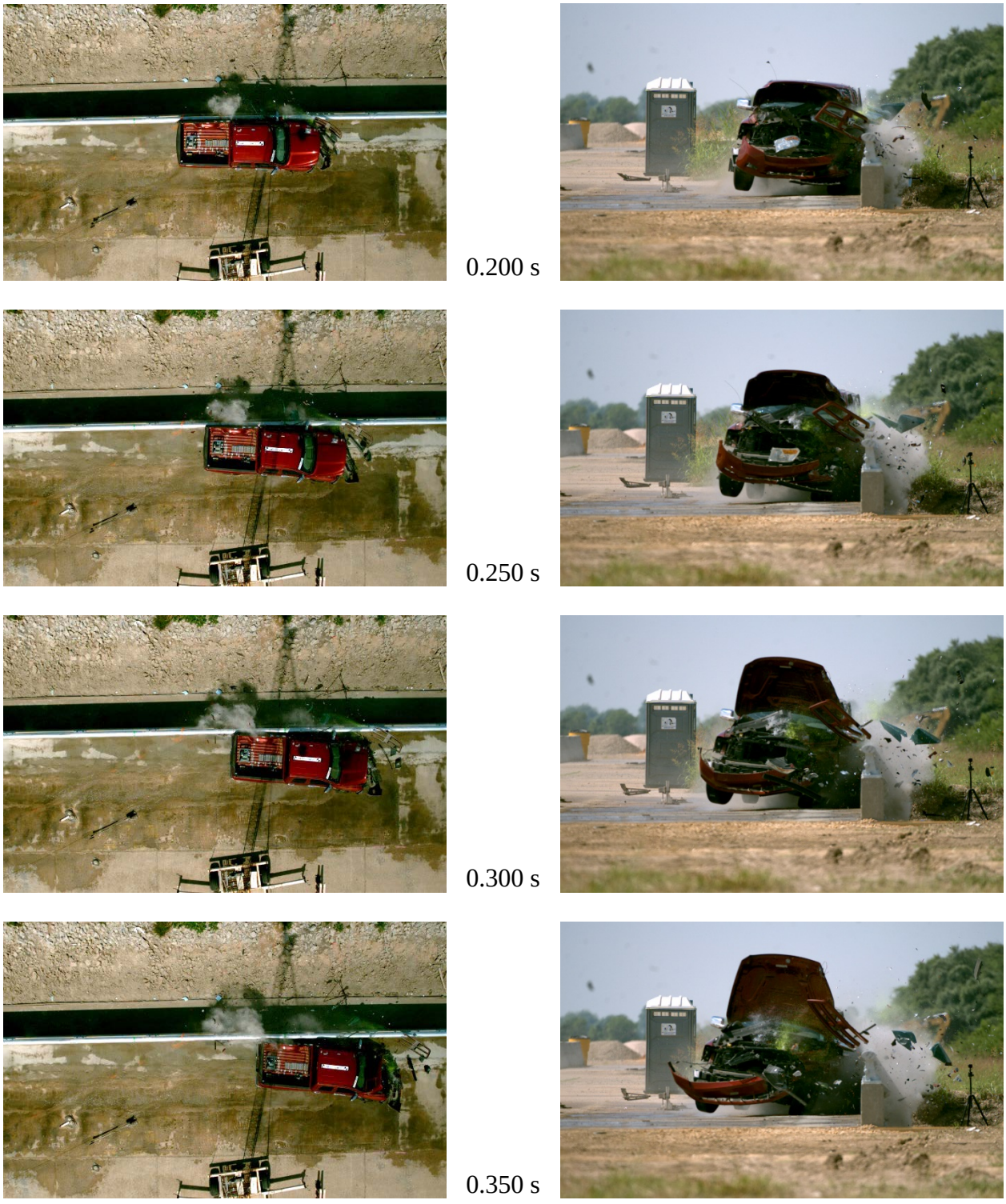

Figure A.10. Sequential Photographs for Test No. 469468-1-2 (Overhead and Frontal Views) (Continued).


0.000 s


0.200 s


0.050 s


0.250 s


0.100 s


0.300 s


0.150 s


0.350 s

Figure A.11. Sequential Photographs for Test No. 469468-1-2 (Rear View).

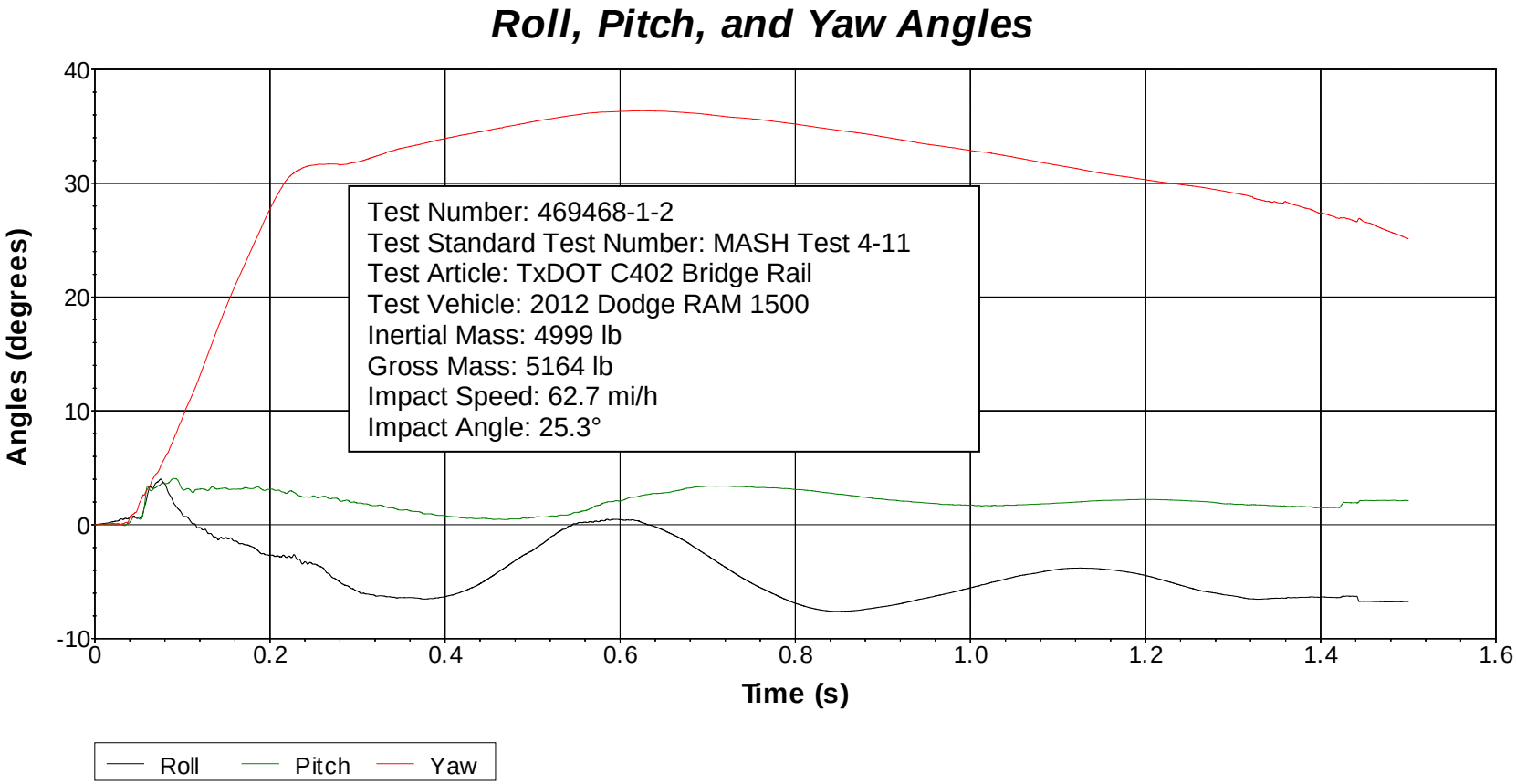

Axes are vehicle-fixed.
Sequence for determining orientation:

1. Yaw.
2. Pitch.
3. Roll.

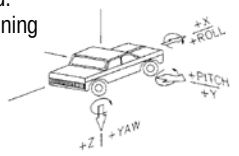

Figure A.12. Vehicle Angular Displacements for Test No. 469468-1-2.

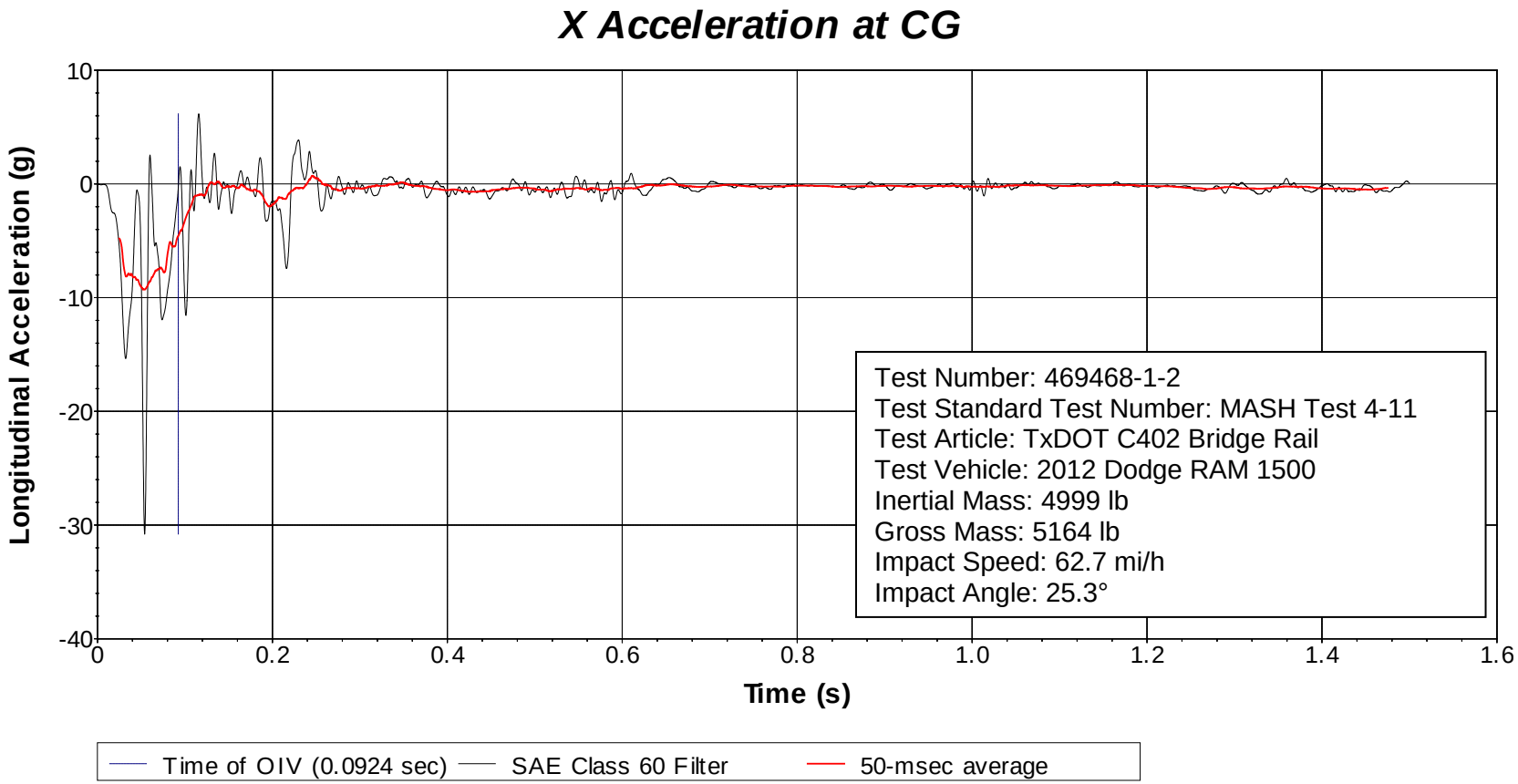

Figure A.13. Vehicle Longitudinal Accelerometer Trace for Test No. 469468-1-2 (Accelerometer Located at Center of Gravity).

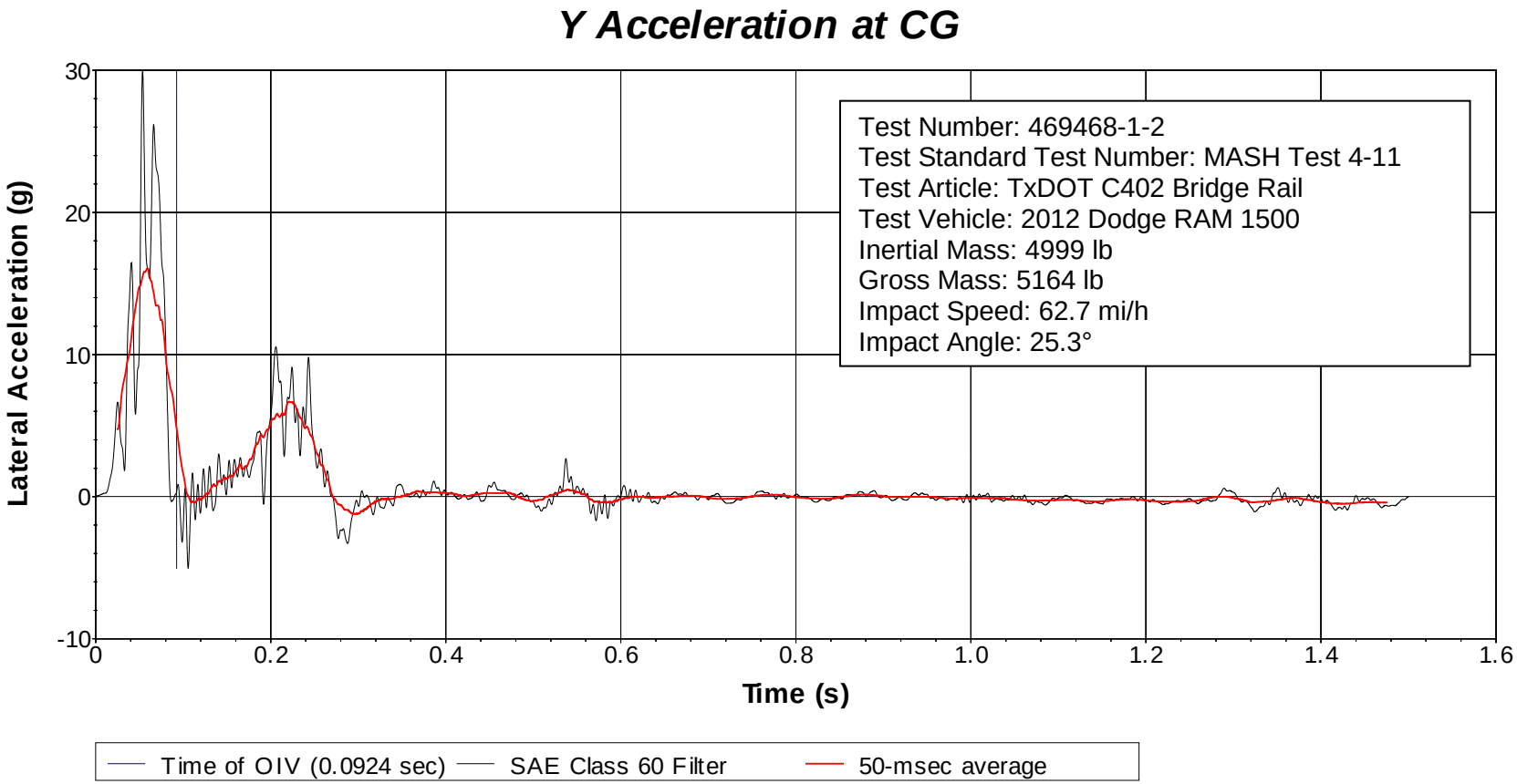

Figure A.14. Vehicle Lateral Accelerometer Trace for Test No. 469468-1-2 (Accelerometer Located at Center of Gravity).

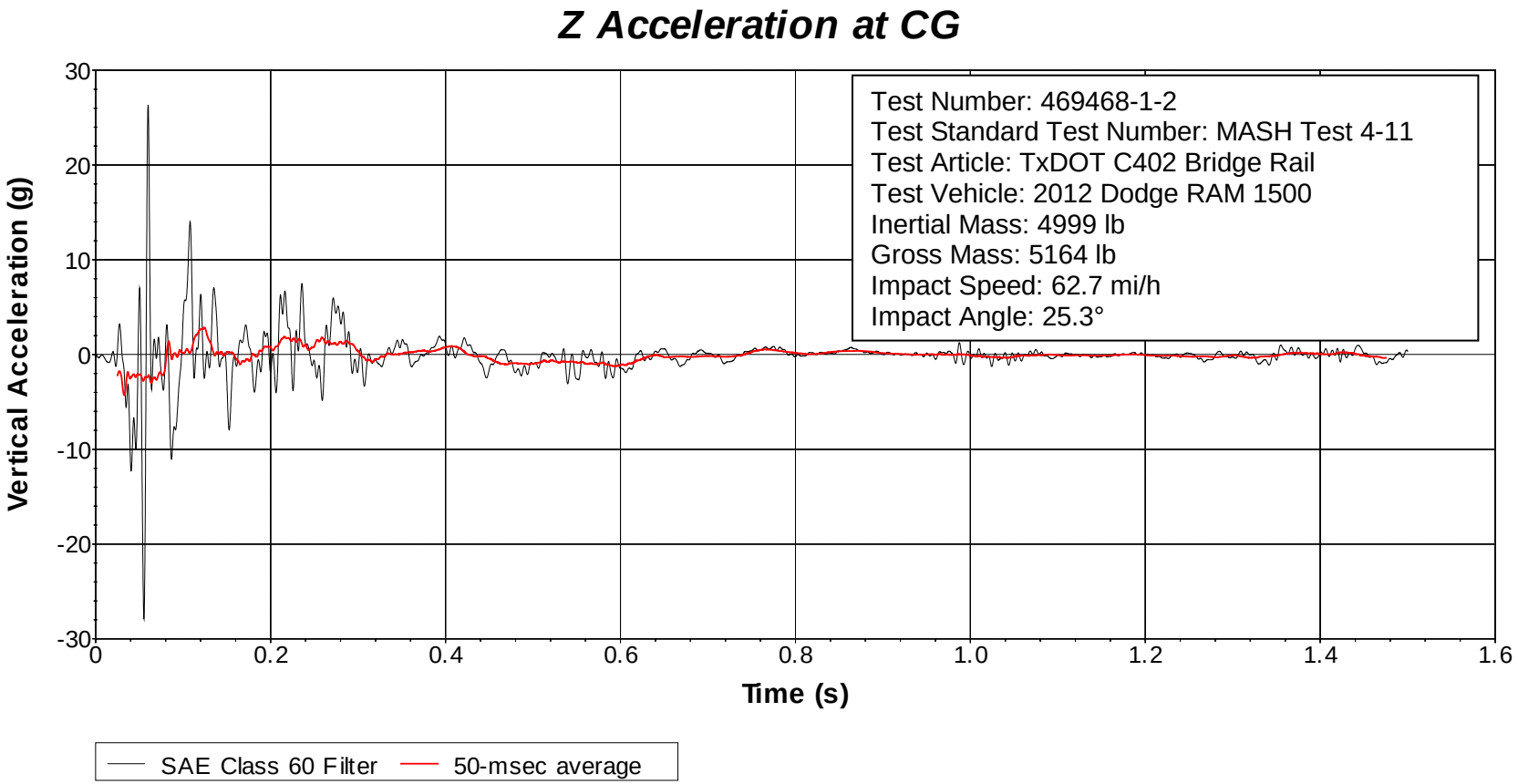

Figure A.15. Vehicle Vertical Accelerometer Trace for Test No. 469468-1-2 (Accelerometer Located at Center of Gravity).

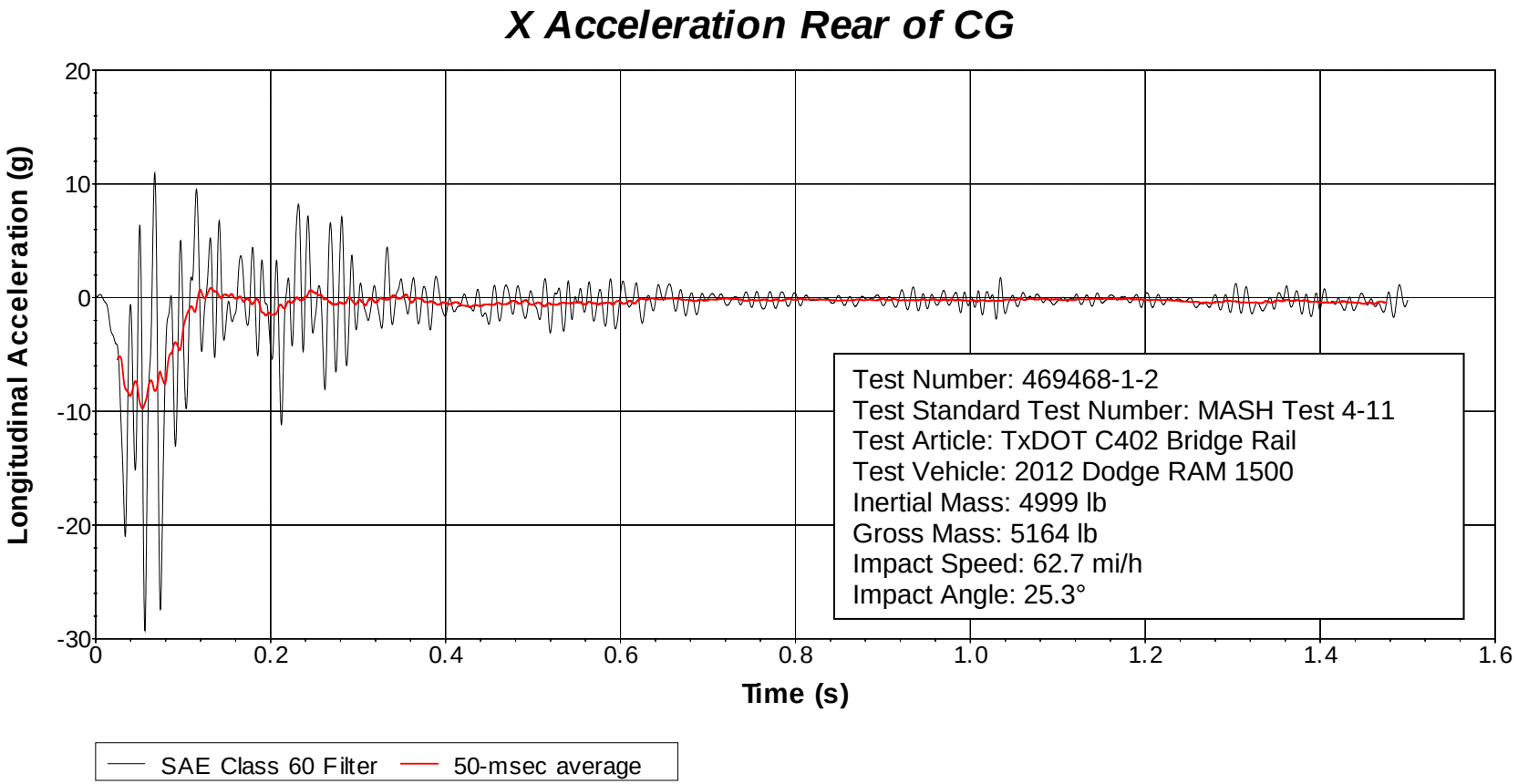

Figure A.16. Vehicle Longitudinal Accelerometer Trace for Test No. 469468-1-2 (Accelerometer Located Rear of Center of Gravity).

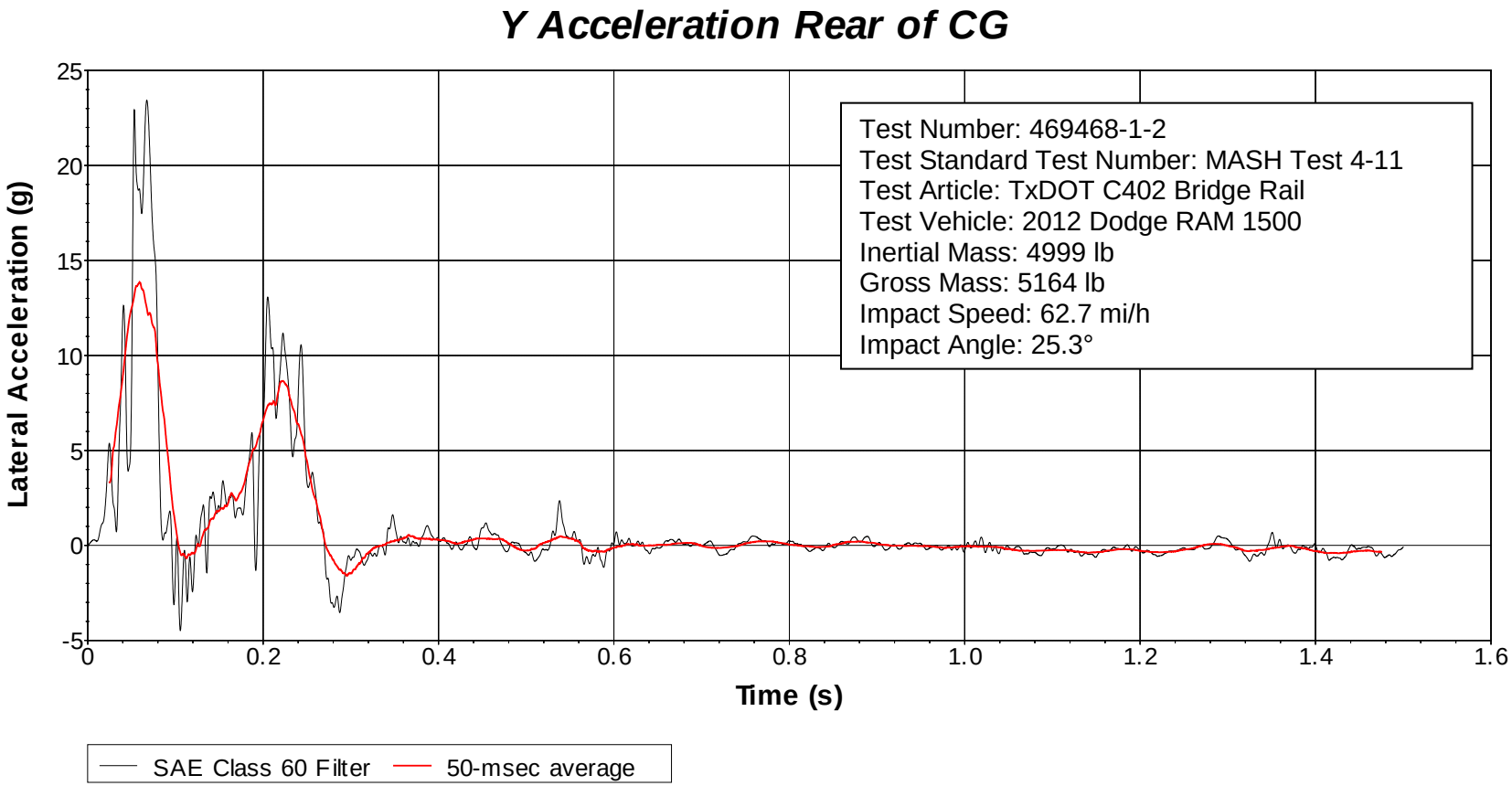

Figure A.17. Vehicle Lateral Accelerometer Trace for Test No. 469468-1-2 (Accelerometer Located Rear of Center of Gravity).

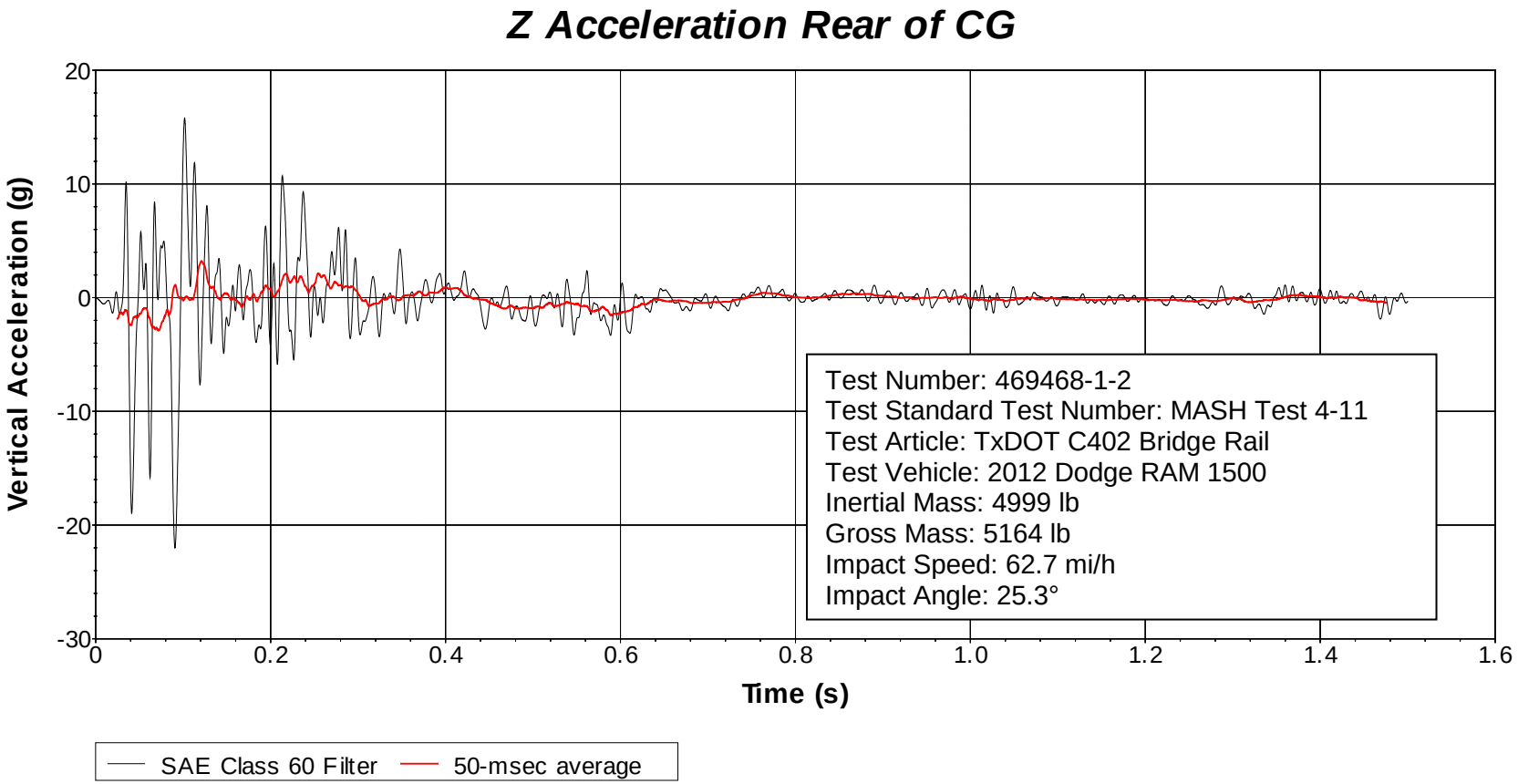

Figure A.18. Vehicle Vertical Accelerometer Trace for Test No. 469468-1-2 (Accelerometer Located Rear of Center of Gravity).

A.5 *MASH* TEST 4-12 (CRASH TEST NO. 469468-1-3)

A.5.1 Vehicle Properties and Information

Table A.8. Vehicle Properties for Test No. 469468-1-3.

Date:	2018-5-11	Test No.:	469468-1-3	VIN No.:	1HTMNAAL1CH619992
Year:	2012	Make:	International	Model:	4300 Single-Unit Truck
Odometer:	189887	Tire Size Front:	11R22.5	Tire Size Rear:	11R22.5

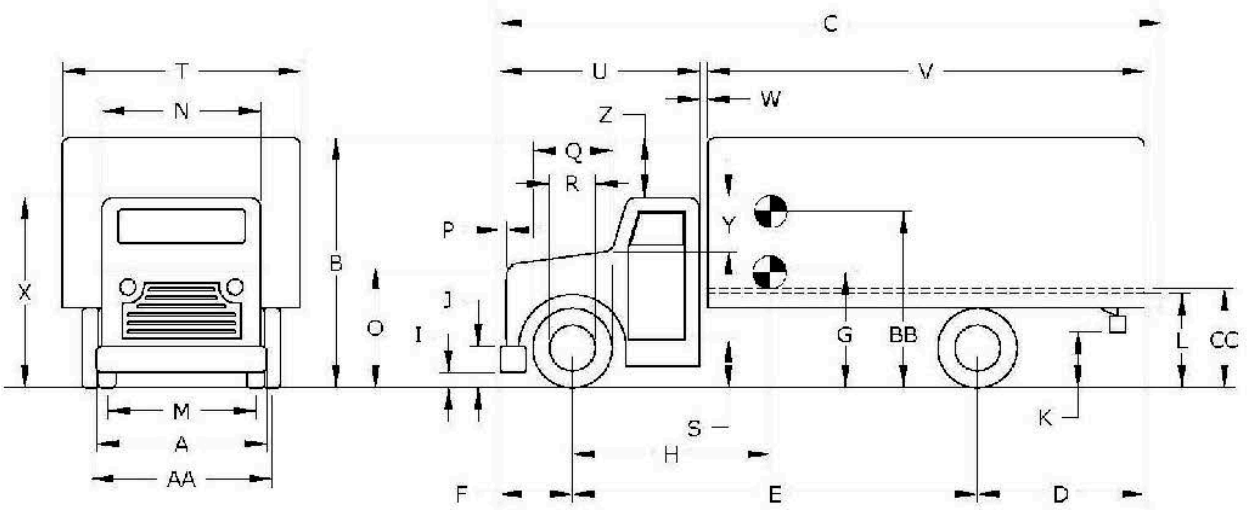

Vehicle Geometry: inches

A	Front Bumper Width:	91.00	K	Rear Bumper Bottom:		U	Cab Length:	103.50
B	Overall Height:	144.50	L	Rear Frame Top:	33.50	V	Trailer/Box Length:	221.50
C	Overall Length:	342.00	M	Front Track Width:	79.50	W	Gap Width:	4.50
D	Rear Overhang:	94.00	N	Roof Width:	72.00	X	Overall Front Height:	97.00
E	Wheel Base:	205.00	O	Hood Height:	58.50	Y	Roof-Hood Distance:	27.00
F	Front Overhang:	43.00	P	Bumper Extension:	5.00	Z	Roof-Box Height Difference:	47.00
G	C.G. Height:		Q	Front Tire Width:	40.00	AA	Rear Track Width:	73.00
H	C.G. Horizontal Dist. w/Ballast:	133.60	R	Front Wheel Width:	23.25	BB	Ballast Center of Mass:	61.50
I	Front Bumper Bottom:	21.00	S	Bottom Door Height:	36.00	CC	Cargo Bed Height:	49.00
J	Front Bumper Top:	35.00	T	Overall Width:	95.00			

Allowable Range: C = 394 inches max.; E = 240 inches max.; CC = 51 ±2 inches; BB = 63 ±2 inches above ground;

Wheel Center Height Front	19.00	Wheel Well Clearance (Front)	7.50	Bottom Frame Height (Front)	24.50
Wheel Center Height Rear	19.00	Wheel Well Clearance (Rear)	6.00	Bottom Frame Height (Rear)	27.00

Table A.8. Vehicle Properties for Test No. 469468-1-3 (Continued).

Date:	2018-5-11	Test No.:	469468-1-3	VIN No.:	1HTMNAAL1CH619992
Year:	2012	Make:	International	Model:	4300 Single-Unit Truck

WEIGHTS

lb	CURB	TEST INERTIAL
$W_{front\ axle}$	6,680	7,680
$W_{rear\ axle}$	3,581	14,380
W_{TOTAL}	10,261	22060

Allowable Range for CURB = 13,200 ±2200 lb | Allowable Range for TIM = 22,046 ±660 lb

Ballast: 11,799 lb (as-needed)
(See *MASH* Section 4.2.1.2 for recommended ballasting)

Mass Distribution

lb	LF:	RF:	LR:	RR:
	3890	3790	7380	7000

Engine Type: DT
Engine Size: 466

Transmission Type:
☑ Auto or ☐ Manual
☐ FWD ☑ RWD ☐ 4WD

Accelerometer Locations inches

	x[1]	y	z[2]
Front:			
Center:	133.60	0.00	47.00
Rear:	223.60	0.00	47.00

Describe any damage to the vehicle prior to test:

Other notes to include ballast type, dimensions, mass, location, center of mass, and method of attachment:

2 concrete blocks, Height 30 inches x Width 60 inches x Length 30 inches
Placed centered in middle of bed
Four 5/16 cables per block

[1] Referenced to the front axle
[2] Above ground

A.5.2 Sequential Photographs

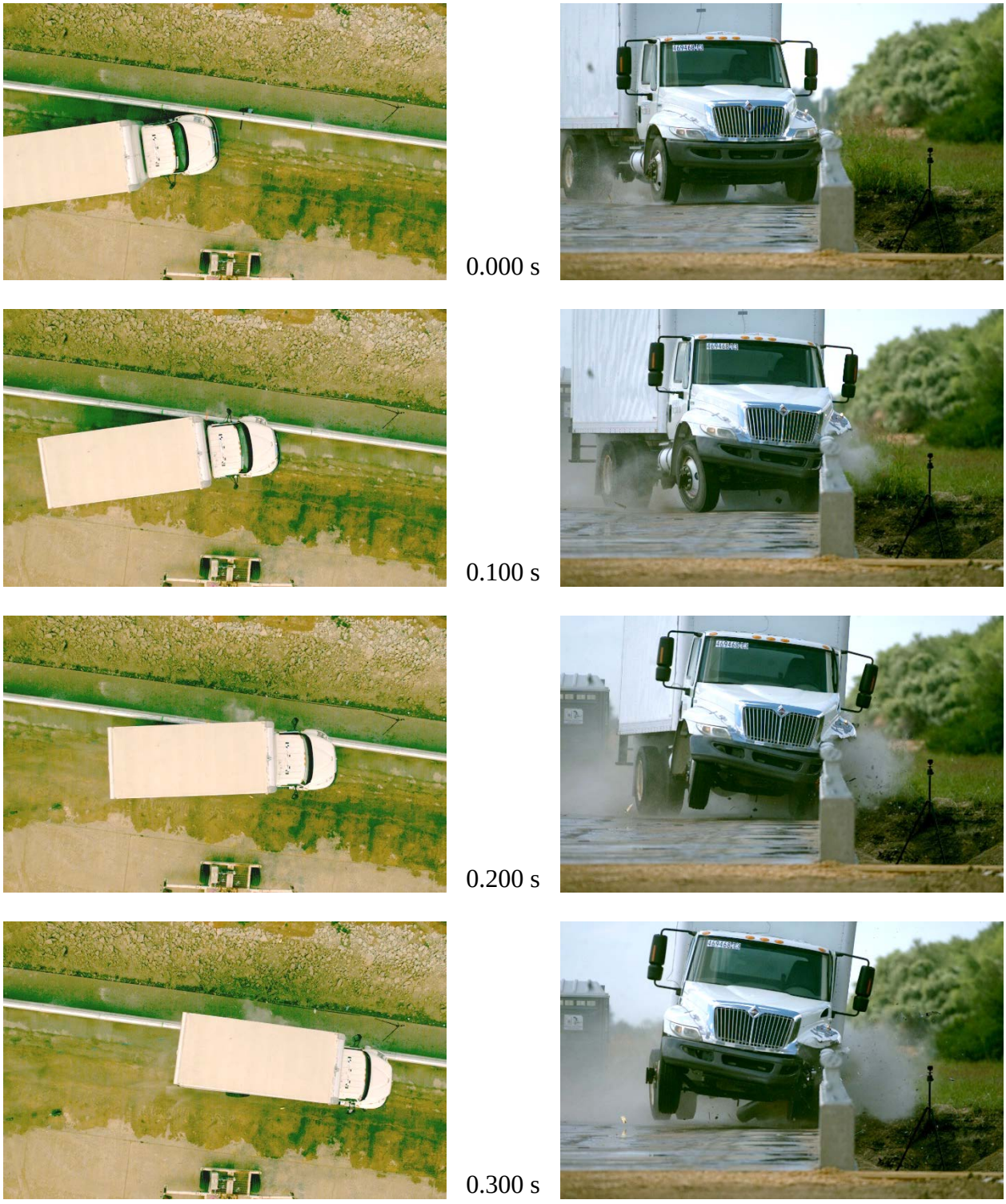

Figure A.19. Sequential Photographs for Test No. 469468-1-3 (Overhead and Frontal Views).

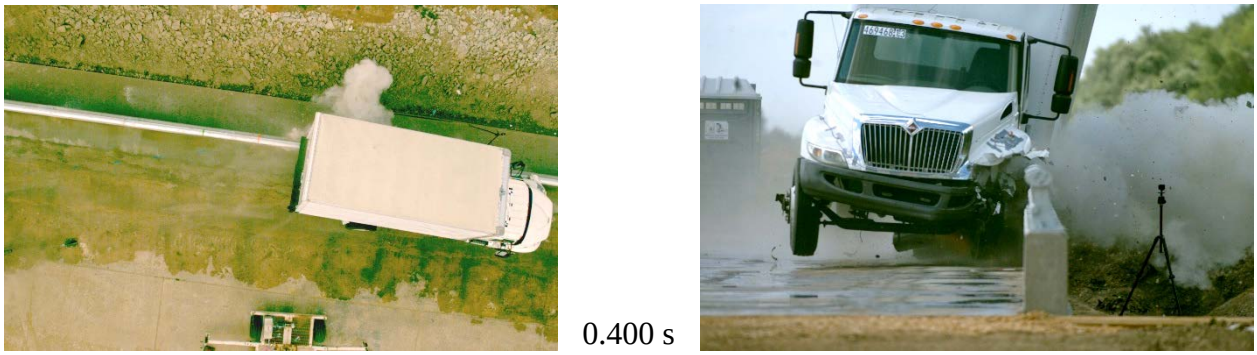
0.400 s


0.600 s


1.000 s

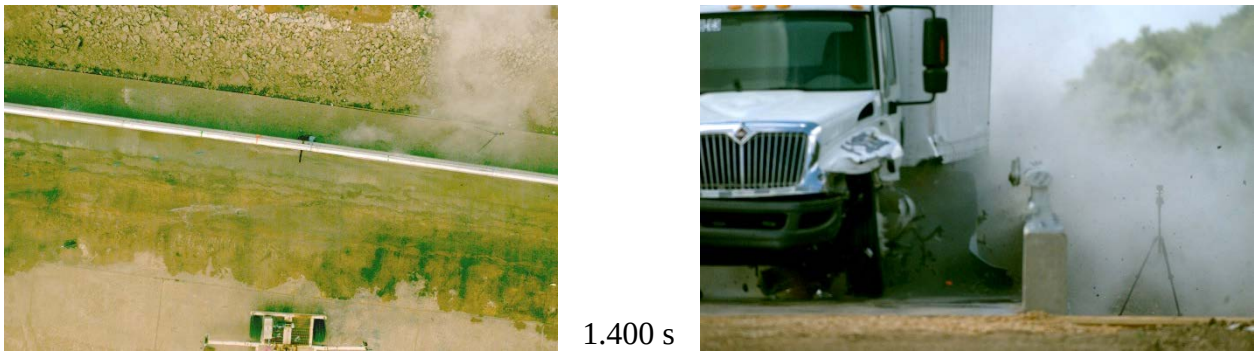
1.400 s

Figure A.19. Sequential Photographs for Test No. 469468-1-3 (Overhead and [View] Views) (Continued).



0.000 s



0.400 s



0.100 s



0.600 s



0.200 s



1.000 s



0.300 s



1.200 s

Figure A.20. Sequential Photographs for Test No. 469468-1-3 (Rear View).

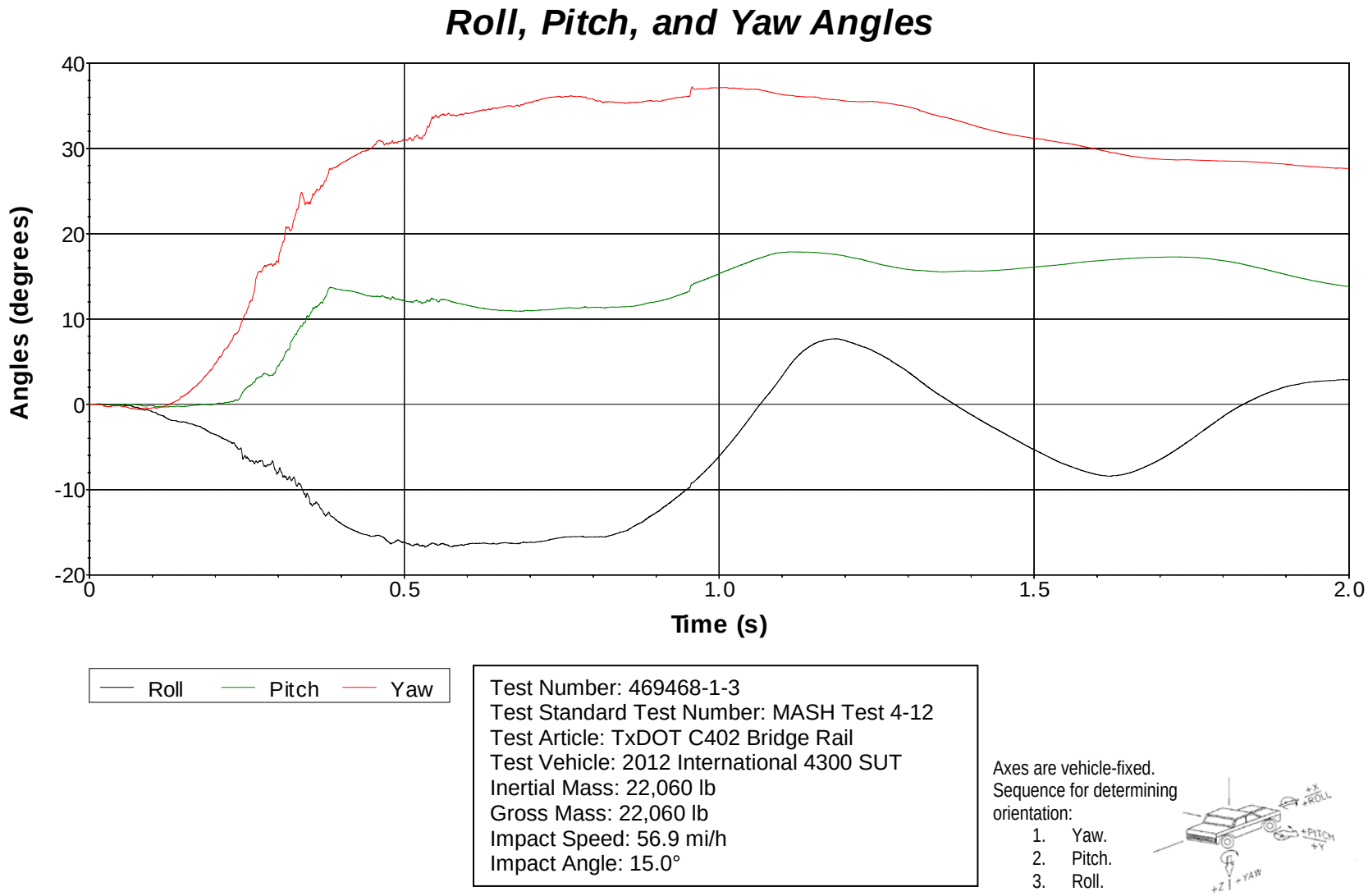

Figure A.21. Vehicle Angular Displacements for Test No. 469468-1-3.

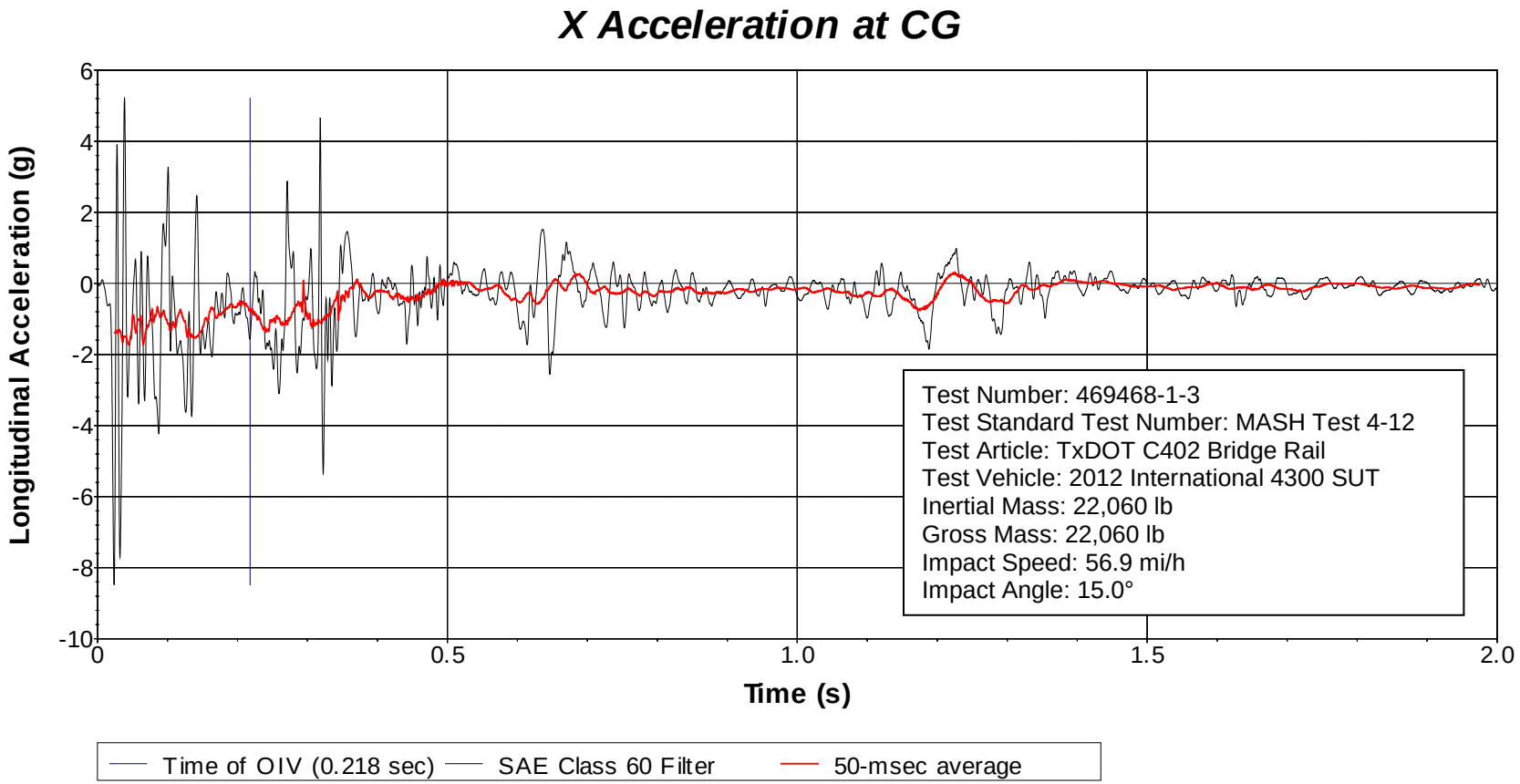

Figure A.22. Vehicle Longitudinal Accelerometer Trace for Test No. 469468-1-3 (Accelerometer Located at Center of Gravity).

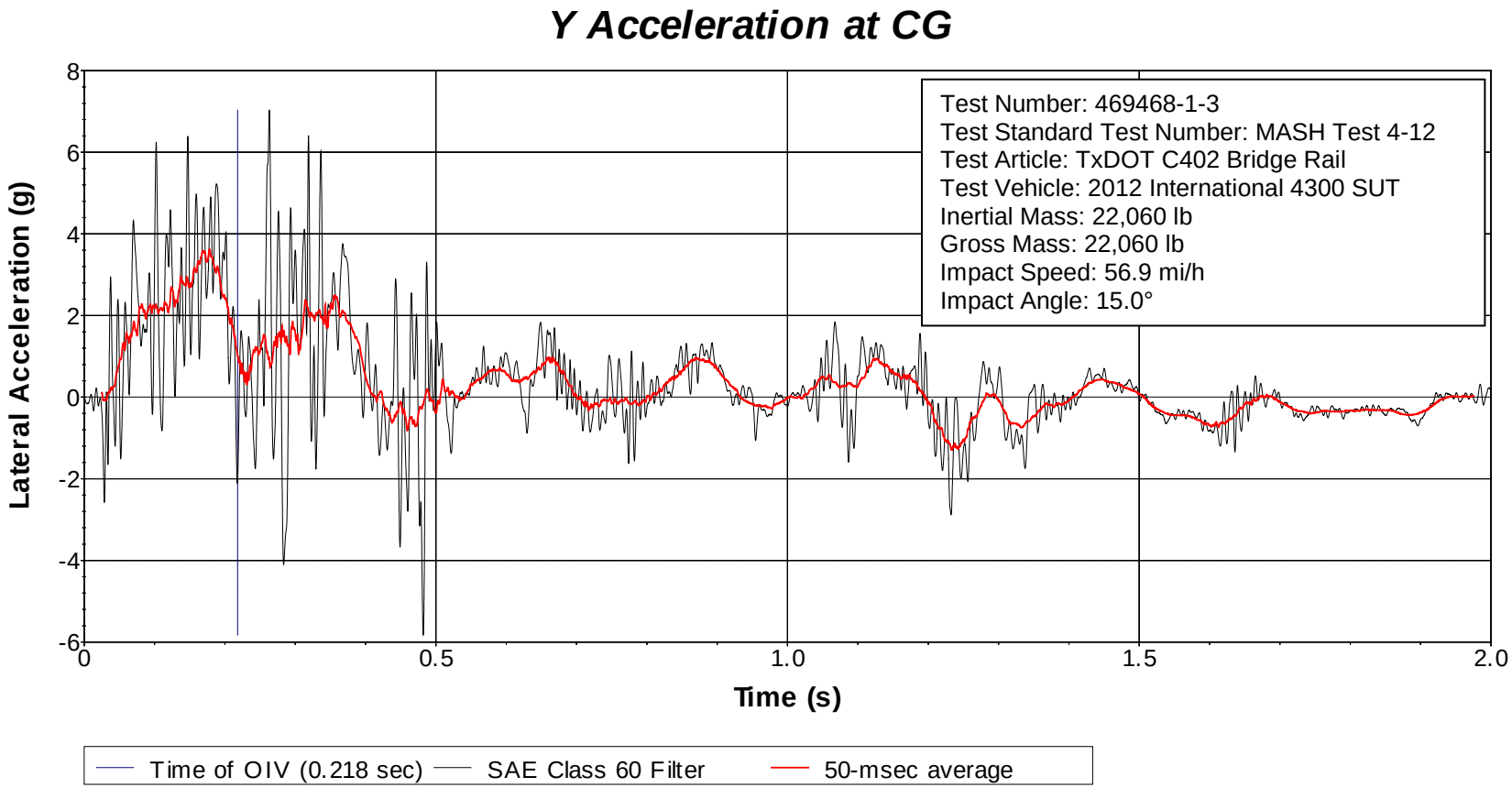

Figure A.23. Vehicle Lateral Accelerometer Trace for Test No. 469468-1-3 (Accelerometer Located at Center of Gravity).

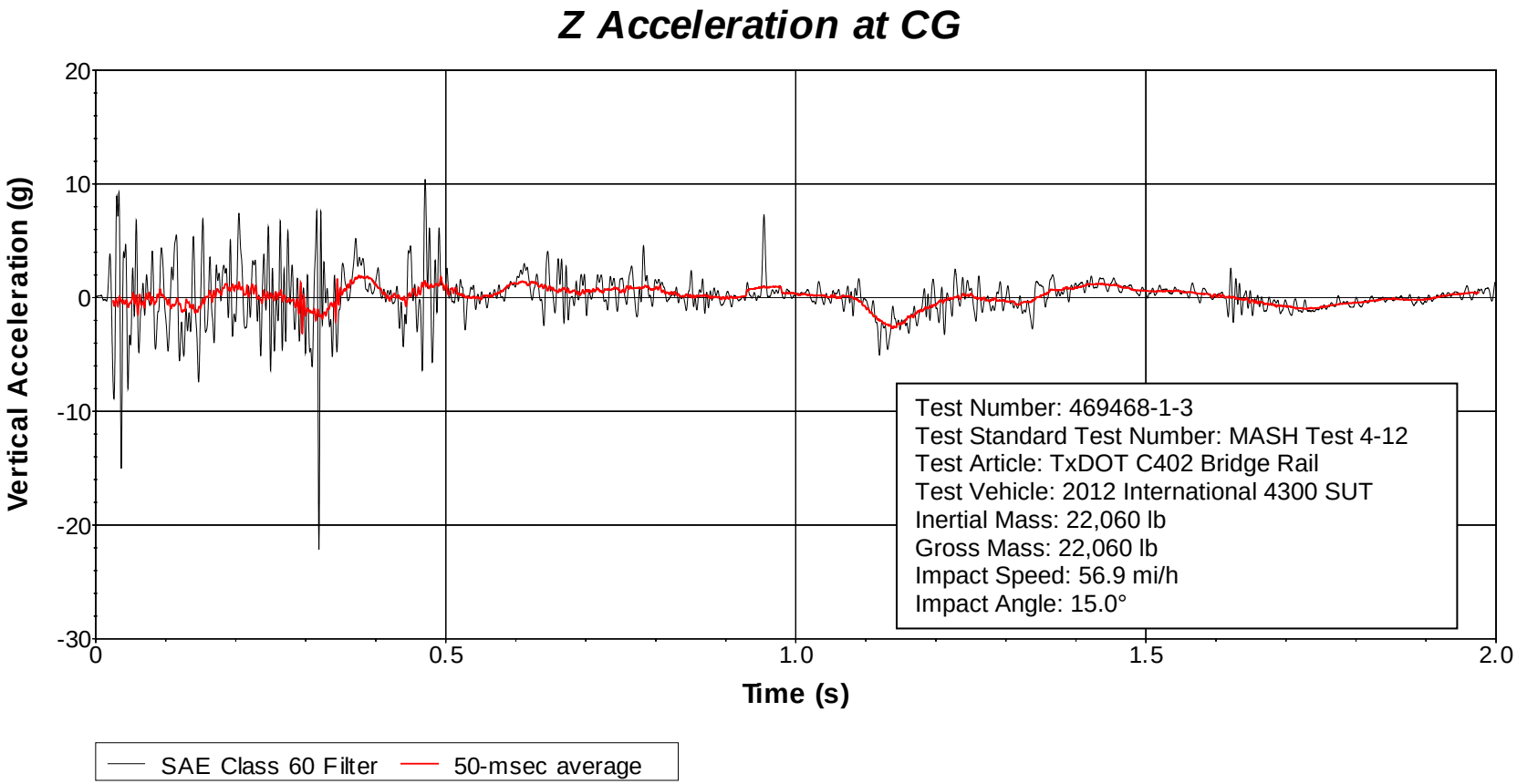

Figure A.24. Vehicle Vertical Accelerometer Trace for Test No. 469468-1-3 (Accelerometer Located at Center of Gravity).

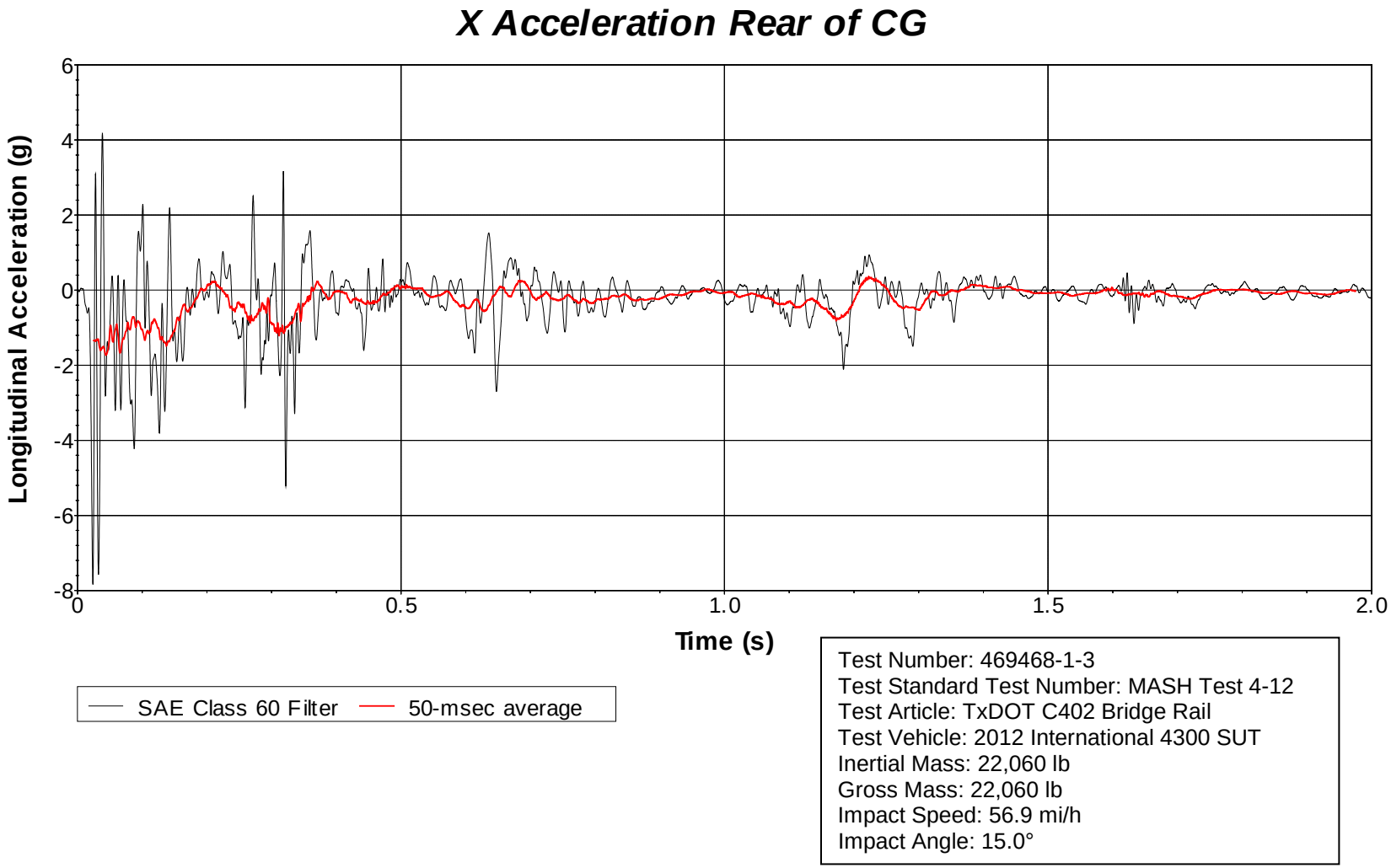

Figure A.25. Vehicle Longitudinal Accelerometer Trace for Test No. 469468-1-3 (Accelerometer Located Rear of Center of Gravity).

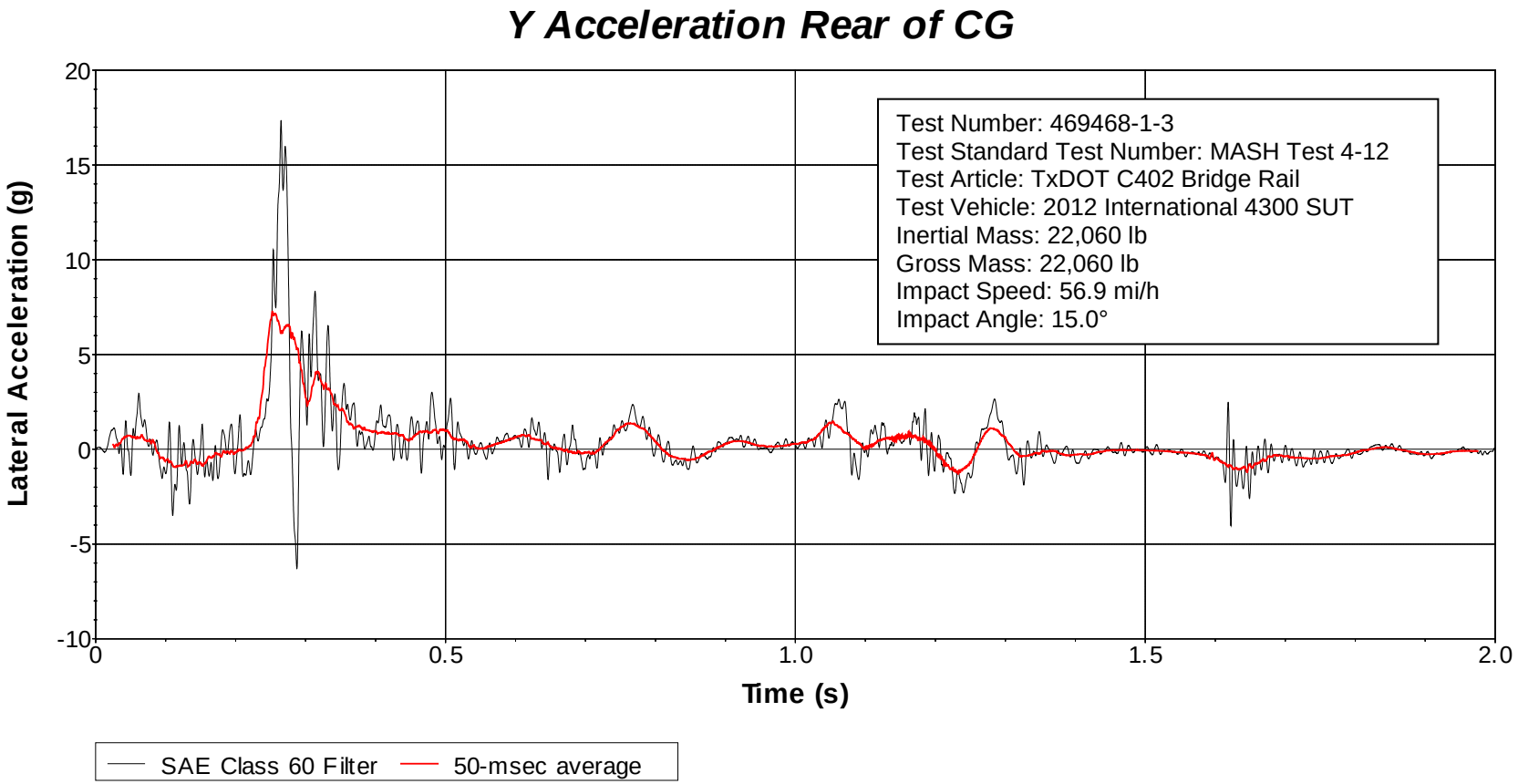

Figure A.26. Vehicle Lateral Accelerometer Trace for Test No. 469468-1-3 (Accelerometer Located Rear of Center of Gravity).

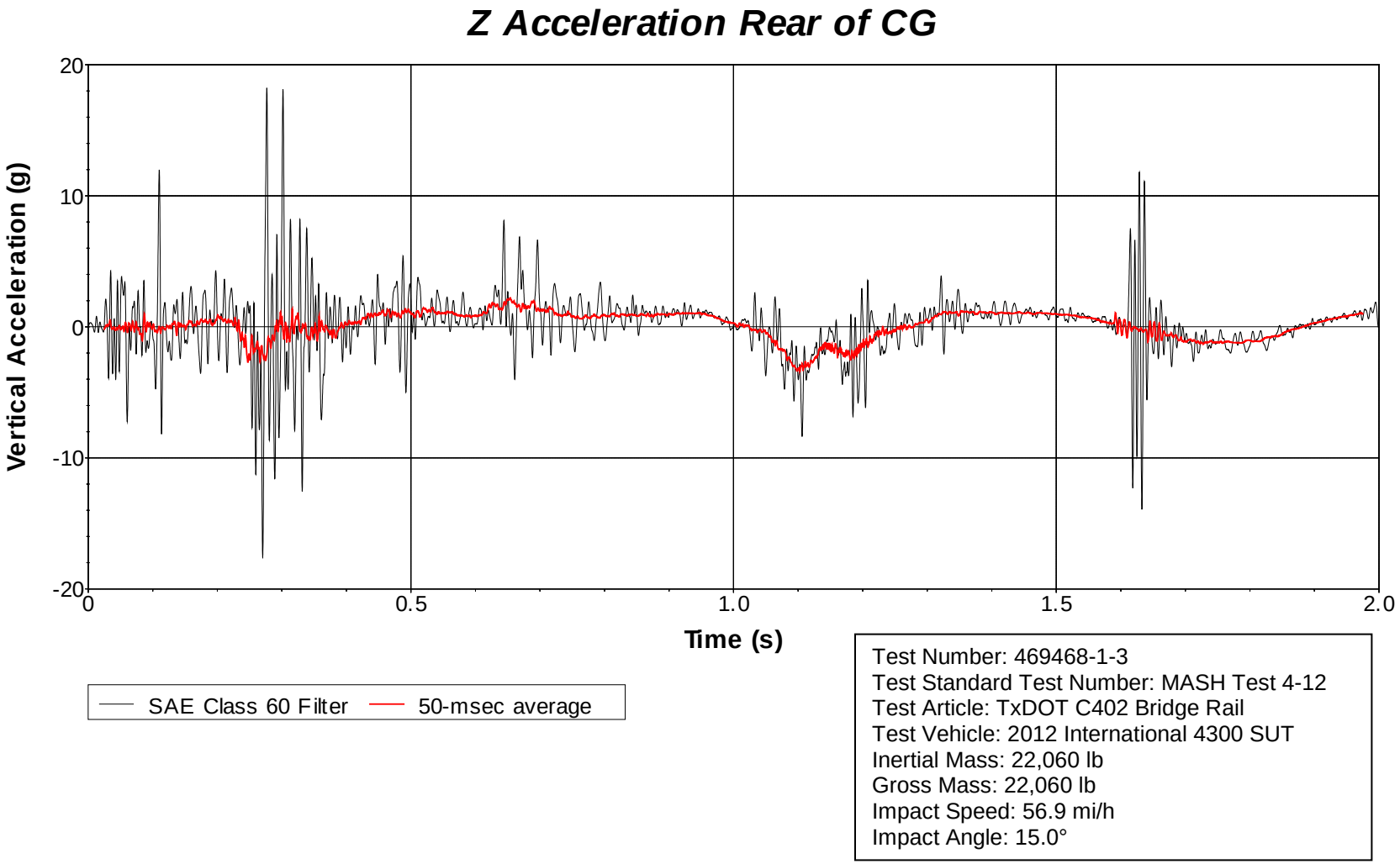

Figure A.27. Vehicle Vertical Accelerometer Trace for Test No. 469468-1-3 (Accelerometer Located Rear of Center of Gravity).

APPENDIX B. TXDOT C412 BRIDGE RAIL

B.1 DETAILS OF THE TXDOT C412 BRIDGE RAIL

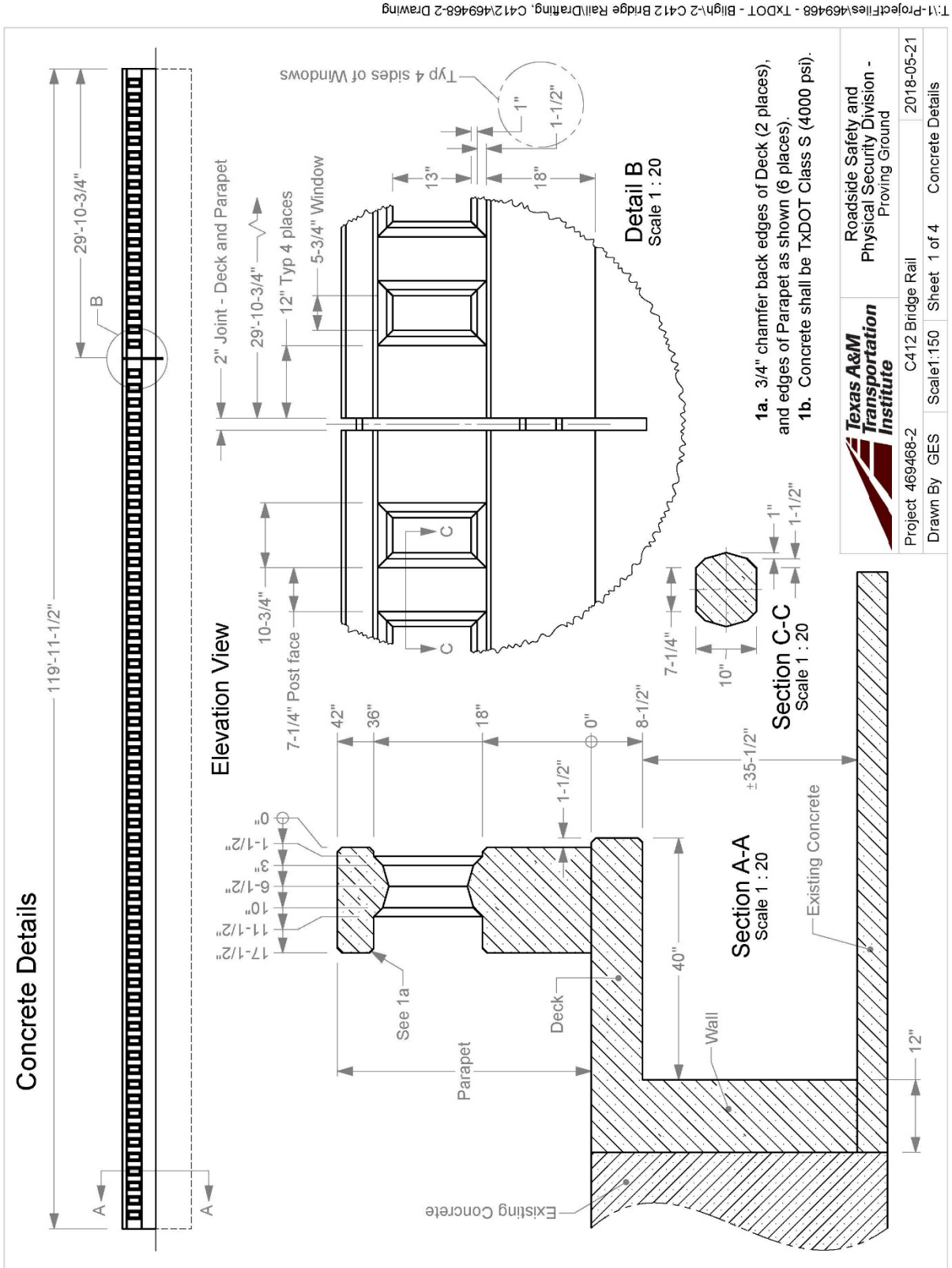

Deck and Wall Rebar

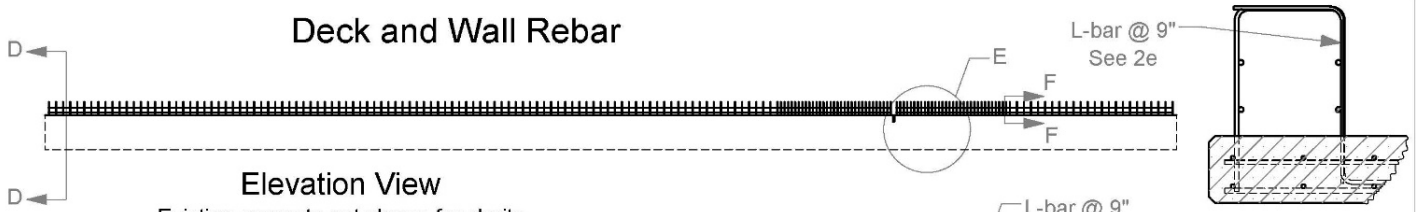

Elevation View

Existing concrete not shown for clarity

Section F-F

Scale 1 : 20

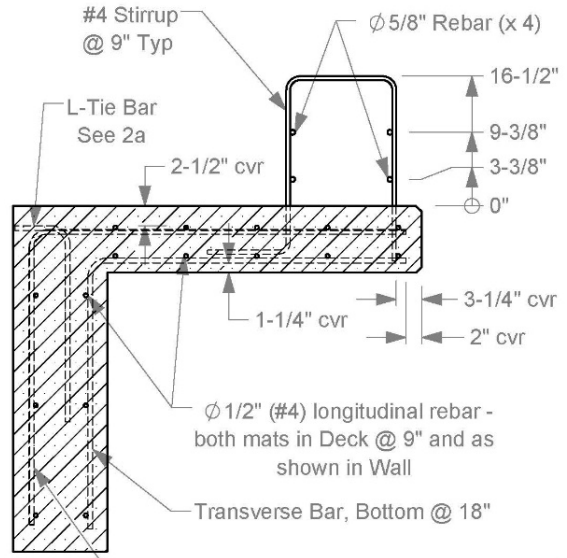

Section D-D

Scale 1 : 20

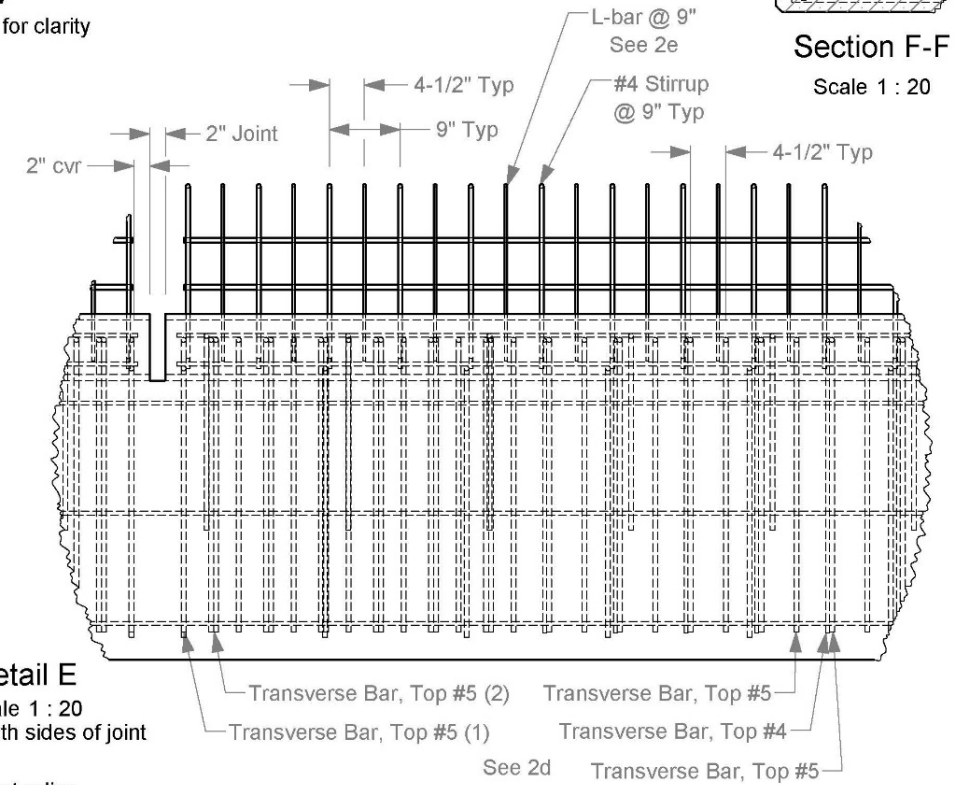

Detail E

Scale 1 : 20

Typical both sides of joint

2a. Secure each Tie Bar to existing rebar (not shown here) protruding from the runway with a minimum 3" weld. Maximum spacing is 18".

2b. Minimum lap is 24" for Ø5/8" (#5) bars and 19" for Ø1/2" (#4) bars. All rebar is grade 60.

2c. All rebar dimensions are to center of bar unless otherwise indicated by "cvr" (cover).

2d. Place Top Tranverse bars alternating single instances and in pairs. All single instances are #5 bars. Pairs are both #5 bars for the first 42" from the Joint, and one #4 and one #5 from 42" to the end.

2e. 16 bars each side of the Joint. Secure with Hilti HIT-RE 500 V3 epoxy according to manufacturer's instructions, with 6" embedment. Spacing is 9", with ±1-1/2" tolerance as needed to avoid transverse bars in deck.

Texas A&M Transportation Institute		Roadside Safety and Physical Security Division - Proving Ground	
Project 469468-2	C412 Bridge Rail		2018-05-21
Drawn By GES	Scale1:200	Sheet 2 of 4	Deck and Wall Rebar

T:\1-ProjectFiles\469468 - TxDOT - Bligh-2 C412 Bridge Rail\Drafting, C412\469468-2 Drawing

Parapet Rebar

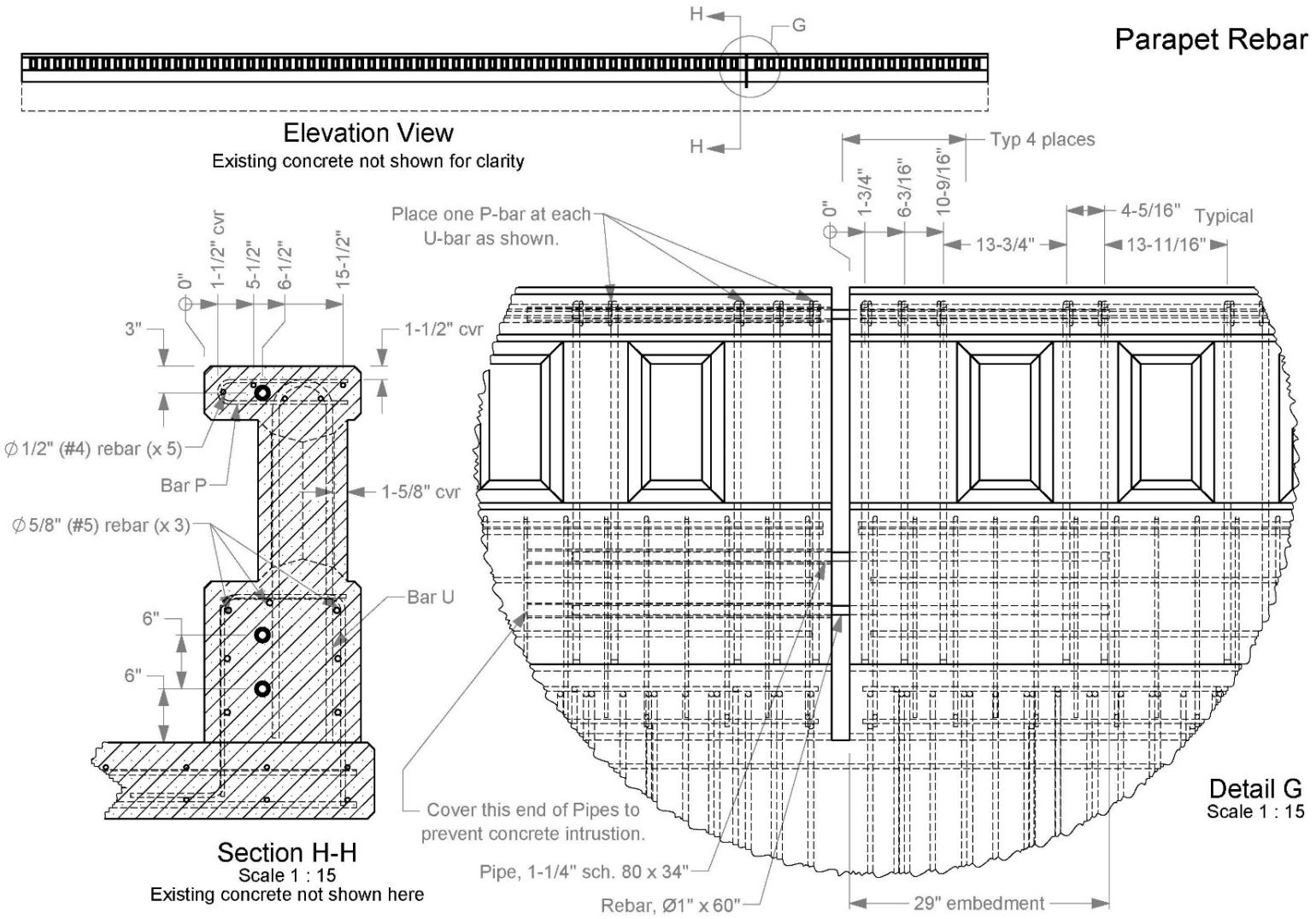

3a. Minimum lap is 24" for Ø5/8" (#5) bars and 19" for Ø1/2" (#4) bars. All rebar is grade 60.

3b. All rebar dimensions are to center of bar unless otherwise indicated by "cvr" (cover).

Texas A&M Transportation Institute		Roadside Safety and Physical Security Division - Proving Ground	
Project 469468-2	C412 Bridge Rail		2018-05-21
Drawn By GES	Scale1:200	Sheet 3 of 4	Parapet Rebar

T:\1-ProjectFiles\469468 - TxDOT - Bligh-2 C412 Bridge Rail\Drafting, C412\469468-2 Drawing

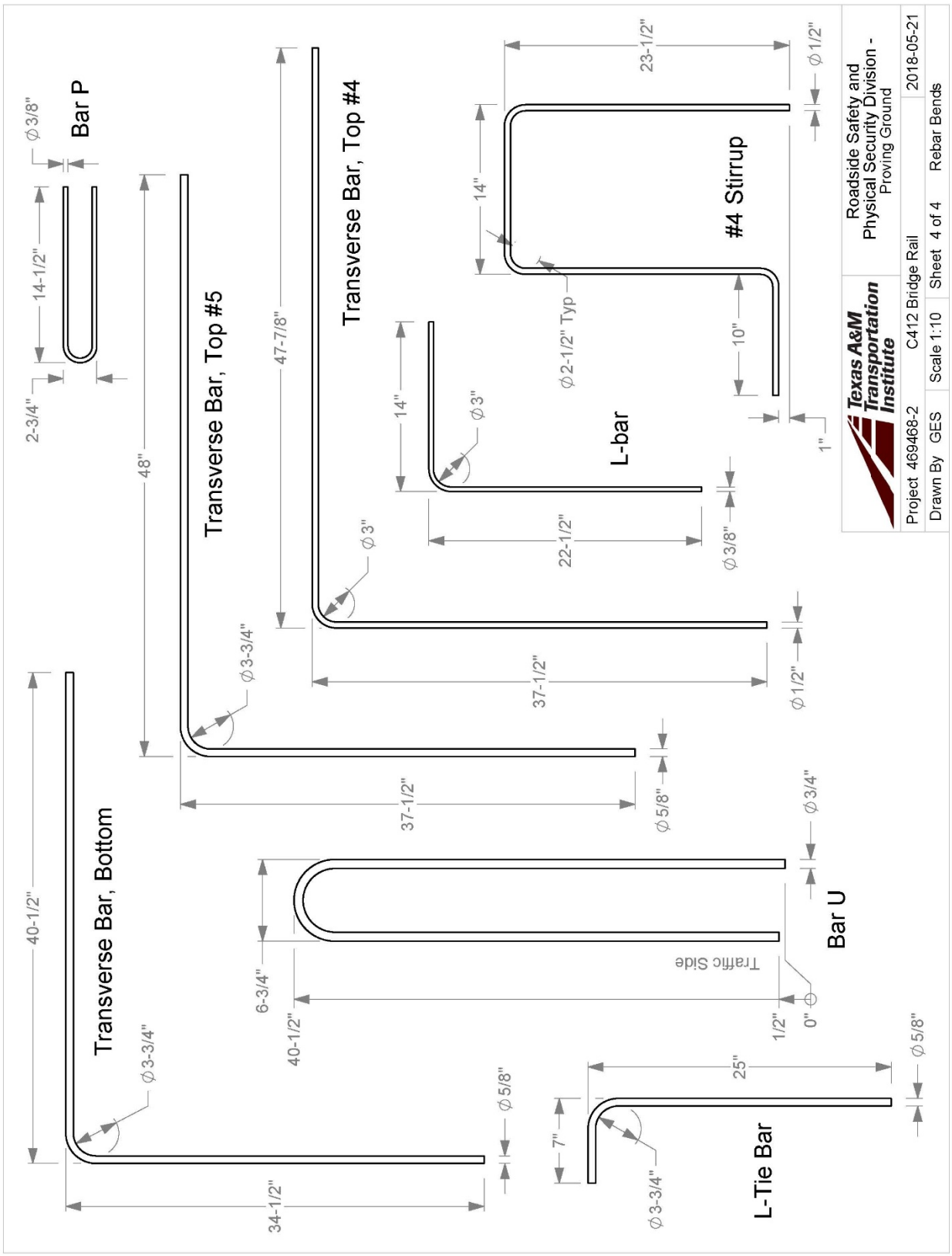
T:\1-Projectfiles\469468 - TxDOT - Bligh\2 C412 Bridge Rail\Drafting, C412\469468-2 Drawing
Bar P
Transverse Bar, Top #5
Transverse Bar, Top #4
Transverse Bar, Bottom
L-bar
#4 Stirrup
L-Tie Bar
Bar U
Traffic Side
Roadside Safety and Physical Security Division - Proving Ground
Texas A&M Transportation Institute
Project 469468-2
C412 Bridge Rail
2018-05-21
Drawn By GES
Scale 1:10
Sheet 4 of 4
Rebar Bends

Texas A&M Transportation Institute Proving Ground, 3100 SH 47, Bldg 7091, Bryan, TX 77807 Texas A&M University, College Station, TX 77843, Phone 979-845-6375	5.4.24.1 Test Item/ Material Received Worksheet	Doc. No. QPF 5.4.24.1	Revision Date: 2012-09-17
Quality Policy Form	Revised by: G. E. Schroeder Approved by: R. A. Zimmer	Revision: 4	Page: 1 of 1

Date Received: _____ **Person(s) accepting delivery:** _____

Item No.	Description	For PO#	Supplier	Location	Notes
1)	#5 Rebar ASTM A615-16 Gr 420/60	469688-2	CMC	Shop	
2)	#4 Rebar ASTM A615-16 Gr 420/60	469688-2 & 469868-2	CMC	Shop	
3)					
4)					

Store Item No. 1:	Store Item No. 2:	Store Item No. 3:	Store Item No. 4:
☐ in secure outdoor facility ☐ covered with tarp ☐ in secure indoor facility ☐ other (please specify):	☐ in secure outdoor facility ☐ covered with tarp ☐ in secure indoor facility ☐ other (please specify):	☐ in secure outdoor facility ☐ covered with tarp ☐ in secure indoor facility ☐ other (please specify):	☐ in secure outdoor facility ☐ covered with tarp ☐ in secure indoor facility ☐ other (please specify):

TR No. testno

B-6

2019-03-26

CMC STEEL OKLAHOMA
584 Old Highway 70
Durant OK 74701-0000

CERTIFIED MILL TEST REPORT

For additional copies call

We hereby certify that the test results presented here are accurate and conform to the reported grade specification

Jacob Selzer – CMC Steel

Quality Assurance Manager

HEAT NO.:6000309 SECTION: REBAR 13MM (#4) 20'0" 420/60 GRADE: ASTM A615-16 Gr 420/60 ROLL DATE: 03/20/2018 MELT DATE: Cert. No.: 82344800 / 000309J130	SOLD TO	CMC Construction Svcs College Stati 10650 State Hwy 30 College Station TX US 77845-7950 979 774 5900	SHIP TO	CMC Construction Svcs College Stati 10650 State Hwy 30 College Station TX US 77845-7950 979 774 5900	Delivery#: 82344800 BOL#: 72415067 CUST PO#: 777141 CUST P/N: DLVRY LBS / HEAT: 17528.000 LB DLVRY PCS / HEAT: 1312 EA

Characteristic	Value	Characteristic	Value	Characteristic	Value
C	0.29%	Elongation Gage Lgth test 1	8IN		
Mn	0.82%	Bend Test Diameter	1.750IN		
P	0.021%	Bend Test 1	Passed		
S	0.030%	Rebar Deformation Avg. Spaci	0.335IN		
Si	0.15%	Rebar Deformation Avg. Heigh	0.029IN		
Cu	0.22%	Rebar Deformation Max. Gap	0.110IN		
Cr	0.10%	Uniform Elongation	6.5%		
Ni	0.07%				
Mo	0.015%				
V	0.005%				
Sn	0.009%				
Al	0.000%				
N	0.0000%				
Carbon Eq A6	0.47%				
Yield Strength test 1	100.0ksi				
Yield Strength test 1 (metri	690MPa				
Tensile Strength test 1	117.0ksi				
Tensile Strength 1 (metric)	807MPa				
Elongation test 1	12%				

The Following is true of the material represented by this MTR:

- *Material is fully killed
- *100% melted and rolled in the USA
- *EN10204:2004 3.1 compliant
- *Contains no weld repair
- *Contains no Mercury contamination
- *Manufactured in accordance with the latest version of the plant quality manual
- *Meets the "Buy America" requirements of 23 CFR635.410

REMARKS :

FOR Jobs 469688-2 & 469468-2

03/22/2018 15:09:51

TR No. testno

B-7

2019-03-26

CMC STEEL TEXAS
1 STEEL MILL DRIVE
SEGUIN TX 78155-7510

CERTIFIED MILL TEST REPORT

For additional copies call
830-372-8771

We hereby certify that the test results presented here are accurate and conform to the reported grade specification

TOMMY HEWITT
Quality Assurance Manager

HEAT NO.:3078309 SECTION: REBAR 16MM (#5) 20'0" 420/60 GRADE: ASTM A615-16 Gr 420/60 ROLL DATE: 03/06/2018 MELT DATE: 03/04/2018 Cert. No.: 82336909 / 078309A371	SOLD TO	CMC Construction Svcs College Stati 10650 State Hwy 30 College Station TX US 77845-7950 979 774 5900	SHIP TO	CMC Construction Svcs College Stati 10650 State Hwy 30 College Station TX US 77845-7950 979 774 5900	Delivery#: 82336909 BOL#: 72403407 CUST PO#: 776230 CUST P/N: DLVRY LBS / HEAT: 24090.000 LB DLVRY PCS / HEAT: 1155 EA

Characteristic	Value	Characteristic	Value	Characteristic	Value
C	0.43%				
Mn	0.98%				
P	0.011%				
S	0.045%				
Si	0.20%				
Cu	0.28%				
Cr	0.10%				
Ni	0.13%				
Mo	0.042%				
V	0.000%				
Cb	0.003%				
Sn	0.010%				
Al	0.002%				
Yield Strength test 1	63.9ksi				
Tensile Strength test 1	104.1ksi				
Elongation test 1	13%				
Elongation Gage Lgth test 1	8IN				
Bend Test Diameter	2.188IN				
Bend Test 1	Passed				

The Following is true of the material represented by this MTR:

**Material is fully killed*
**100% melted and rolled in the USA*
**EN10204:2004 3.1 compliant*
**Contains no weld repair*
**Contains no Mercury contamination*
**Manufactured in accordance with the latest version of the plant quality manual*
**Meets the "Buy America" requirements of 23 CFR635.410*

REMARKS :

FOR Job #S-465688-2

03/14/2018 22:19:16

STRAIGHT BILL OF LADING-SHORT FORM
ORIGINAL-NON NEGOTIABLE

CMC

72421556-01

SHIPMENT NO.(BOL) : 72421556 DATE AND TIME : 04/02/2018 12:53:46 SHIP FROM : CMC Sterling Steel Truck 2001 Brittmoore Road Houston, TX 77043-2208 USA Contact Phone No. :713-690-0347 Fax No. :	CARRIER'S NAME: Imber Ventura TRUCK/UNIT No: CMC INCO TERMS: CPT Bryan SHIP TO: 3101939 Tx A & M University Transporation 3100 State Hwy 47, Bldg. 7091 Bryan, TX 77807-0000 USA Contact Phone No. :(254)859-5494 Fax No. :(254)859-5497	SEAL NUMBER : TRAILER/RAILCAR No: #553015 SOLD TO: 3007327 Ellis Mc Ginnis Construction 2895 Eddy Gatesville Pkwy Eddy, TX 76524-3911 USA Contact Phone No. :2548595494 Fax No. :2548595497

Subject to Section 7: Subject to Section 7 of Conditions of applicable bill of lading, if this shipment is to be delivered to the consignee without recourse on the consignor, the consignor shall sign the following statement. The carrier shall not make delivery of this shipment without payment of freight and all other lawful charges.

Consignor's Signature : _____

BOL INSTRUCTIONS:

NOTES/SPECIAL INSTRUCTIONS:

Additional Instructions :

Jim (254)227-2815 1st Stop

Material Details

Delivery	Cust PO	Ctrl Cd	Rel No.	Release Description	Dwg #	Material Description	PCS	Weight LB
PROJECT: R/1823300796 UP								
3137044	2802	0NKQ	1	C402 BRIDGE RAIL		Rebar Black 60/420		4,230
3137048	2802	0NKR	2	C411 BRIDGE RAIL		Rebar Black 60/420		3,931
3137050	2802	0NKW	3	C412 BRIDGE RAIL		Rebar Black 60/420		8,533
						Total Weight		16,694

MTR'S INCLUDED

95 Miles

RECEIVED, subject to the classifications in effect on the date of the issue of the Bill of Lading, the property described above, in apparent good order, except as noted (contents of packages unknown), marked, consigned, and destined as indicated below, which said carrier (the word carrier being understood throughout this contract as meaning any person or corporation in possession of the property under the contract) agrees to carry to its usual place of delivery at said destination, if on its route, otherwise to deliver to another carrier on the route to said destination. It is mutually agreed, as to each carrier of all or any said property over all or any said property over all or any portion of said route to destination, and as to each party at any time interested in all or any of said property, that every service to be performed hereunder shall be subject to all the terms and conditions of the Uniform Domestic Straight Bill of Lading set forth (1) in Official, Southern, Western and Illinois Freight Classifications in effect on the date hereof, if this is a rail or a rail-water shipment, or (2) in the applicable motor carrier classification or tariff if this is a motor carrier shipment. Shipper hereby certifies that he is familiar with all the terms and conditions of the said bill of lading, including those on the back thereof, set forth in the classification or tariff which governs the transportation of this shipment and the said terms and conditions are hereby agreed to by the shipper and accepted for himself and his assigns. This is to certify that the above articles are properly describe by name and are packed and marked and are in proper condition for transportation according to regulations by the Interstate Commerce Commission. * If the shipment moves between two ports by a carrier by water, the law requires that the bill of lading shall state whether it is carrier's or shipper's weight." * Shipper's imprints in lieu of stamp; not a part of Bill of Lading approved by the Interstate Commerce Commission. NOTE: Where the rate is dependent on value, shippers are required to state specifically in writing the agreed or declared value of property. The agreed or declared value of the property is hereby specifically state by the shipper to be not exceeding.

DRIVER'S SIGNATURE/AGENT : Ventura

NOTICE TO RECEIVERS :Please check each item on this shipping bill carefully. CMC will not be responsible for any exceptions to goods unless notified within twenty four hours and noted on this document.

RECEIVED BY : _____ DATE: _____ TIME: _____

DELIVERED BY: Imber Ventura DATE: 4-3-18 TIME IN: _____ TIME OUT _____

Page 1 of 2

469468

STRAIGHT BILL OF LADING-SHORT FORM
ORIGINAL-NON NEGOTIABLE

72421556-01

SHIPMENT NO.(BOL) : 72421556 DATE AND TIME : 04/02/2018 12:53:46 SHIP FROM : CMC Sterling Steel Truck 2001 Brittmoore Road Houston, TX 77043-2208 USA Contact Phone No. :713-690-0347 Fax No. :	CARRIER'S NAME: Imber Ventura TRUCK/UNIT No: CMC INCO TERMS: CPT Bryan SHIP TO: 3101939 Tx A & M University Transporation 3100 State Hwy 47, Bldg. 7091 Bryan, TX 77807-0000 USA Contact Phone No. :(254)859-5494 Fax No. :(254)859-5497	SEAL NUMBER : TRAILER/RAILCAR No: SOLD TO: 3007327 Ellis Mc Ginnis Construction 2895 Eddy Gatesville Pkwy Eddy, TX 76524-3911 USA Contact Phone No. :2548595494 Fax No. :2548595497

Subject to Section 7: Subject to Section 7 of Conditions of applicable bill of lading, if this shipment is to be delivered to the consignee without recourse on the consignor, the consignor shall sign the following statement. The carrier shall not make delivery of this shipment without payment of freight and all other lawful charges.

Consignor's Signature : _____

BOL INSTRUCTIONS:

NOTES/SPECIAL INSTRUCTIONS:
Additional Instructions :

Material Details

Delivery	Cust PO	Ctrl Cd	Rel No.	Release Description	Dwg #	Material Description	PCS	Weight LB
PROJECT: R/1823300796 UP								
3137044	2802	0NKQ	1	C402 BRIDGE RAIL		Rebar Black 60/420		4,230
3137048	2802	0NKR	2	C411 BRIDGE RAIL		Rebar Black 60/420		3,931
3137050	2802	0NKW	3	C412 BRIDGE RAIL		Rebar Black 60/420		8,533
						Total Weight		16,694

MTR'S INCLUDED

RECEIVED, subject to the classifications in effect on the date of the issue of the Bill of Lading, the property described above, in apparent good order, except as noted (contents of packages unknown), marked, consigned, and destined as indicated below, which said carrier (the word carrier being understood throughout this contract as meaning any person or corporation in possession of the property under the contract) agrees to carry to its usual place of delivery at said destination, if on its route, otherwise to deliver to another carrier on the route to said destination. It is mutually agreed, as to each carrier of all or any said property over all or any portion of said route to destination, and as to each party at any time interested in all or any of said property, that every service to be performed hereunder shall be subject to all the terms and conditions of the Uniform Domestic Straight Bill of Lading set forth (1) in Official, Southern, Western and Illinois Freight Classifications in effect on the date hereof, if this is a rail or a rail-water shipment, or (2) in the applicable motor carrier classification or tariff if this is a motor carrier shipment. Shipper hereby certifies that he is familiar with all the terms and conditions of the said bill of lading, including those on the back thereof, set forth in the classification or tariff which governs the transportation of this shipment and the said terms and conditions are hereby agreed to by the shipper and accepted for himself and his assigns. This is to certify that the above articles are properly describe by name and are packed and marked and are in proper condition for transportation according to regulations by the Interstate Commerce Commission. " If the shipment moves between two ports by a carrier by water, the law requires that the bill of lading shall state whether it is "carrier's or shipper's weight." " Shippers imprints in lieu of stamp; not a part of Bill of Lading approved by the Interstate Commerce Commission. NOTE: Where the rate is dependent on value, shippers are required to state specifically in writing the agreed or declared value of property. The agreed or declared value of the property is hereby specifically state by the shipper to be not exceeding.

DRIVER'S SIGNATURE/AGENT : _____

NOTICE TO RECEIVERS :Please check each item on this shipping bill carefully. CMC will not be responsible for any exceptions to goods unless notified within twenty four hours and noted on this document.

RECEIVED BY : _____ DATE: _____ TIME: _____

DELIVERED BY: _____ DATE: _____ TIME IN: _____ TIME OUT _____

CMC Sterling Steel
2001 Britmoore
Houston, TX 77043-
Phone: (713) 690-0347 FAX: (713) 690-5758

JOB NUMBER	RELEASE NUMBER	REQ. DELIVERY DATE	PAGE
1823300796	1		1 of 1

JOB NAME: TX A&M UNIV TRANSP INSTITUT(DW — CC: 0NKQ
CUSTOMER: ELLIS-MCGINNIS CONSTRUCTION CO. — BY: GL

MATERIAL TYPE: Rebar, Grade 60, Black
REFERENCE:
DRAWING ID:
DESCRIPTION: C402 BRIDGE RAIL

Itm	Qty	Size	Length	Mark	Shape	Lbs	A	B	C	D	E	F/R	G	H	J	K	O	BC
1	310	5	6-02	TL	17	1995		3-01	3-01									AC03
2	120	5	2-07	TB	17	323		0-07	2-00									AC03
	430.					2318.												
3	105	4	5-02	BL	17	363		2-07	2-07									AC02
4	58	4	40-00	R4		1550												ST
	163.					1913.												

Total Weight: 4,231 Lbs

Longest Length: 40-00

WEIGHT SUMMARY

	TOTAL			STRAIGHT			LIGHT BENDING			HEAVY BENDING		
SIZE	ITEMS	PIECES	LBS	ITEMS	PIECES	LBS	ITEMS	PIECES	LBS	ITEMS	PIECES	LBS
Rebar, Grade 60, Black												
4	2	163	1,913	1	58	1,550	0	0	0	1	105	363
5	2	430	2,318	0	0	0	0	0	0	2	430	2,318
	4	593	4,231	1	58	1,550	0	0	0	3	535	2,681

Total Weight: 4,231 Lbs

Longest Length: 40-00

v16.02.080 (T) (HOW) ©2018 aSa UNAUTHORIZED REPRODUCTION PROHIBITED Monday, March 26, 2018 3:01 PM

CMC Sterling Steel
2001 Britmoore
Houston, TX 77043-
Phone: (713) 690-0347 FAX: (713) 690-5758

JOB NUMBER	RELEASE NUMBER	REQ. DELIVERY DATE	PAGE
1823300796	2		1 of 1

JOB NAME	CC
TX A&M UNIV TRANSP INSTITUT(DW	0NKR

CUSTOMER	BY
ELLIS-MCGINNIS CONSTRUCTION CO.	GL

MATERIAL TYPE	REFERENCE	DRAWING ID	DESCRIPTION
Rebar, Grade 60, Black			C411 BRIDGE RAIL

Itm	Qty	Size	Length	Mark	Shape	Lbs	A	B	C	D	E	F/R	G	H	J	K	O	BC
1	4	7	40-00	R7		327												ST
	4.					327.												
2	105	5	8-08	S	T2	949	0-06	0-06	3-04	0-06	3-04		0-06					AC14
3	155	5	6-02	TL	17	997		3-01	3-01									AC03
4	105	5	3-05	U	18	375	1-051	1-021	0-10						0-06			AC03
5	60	5	2-07	TB	17	161		0-07	2-00									AC03
6	4	5	40-00	R5		167												ST
	429.					2649.												
7	60	4	5-02	BL	17	207		2-07	2-07									AC02
8	28	4	40-00	R4		748												ST
	88.					955.												

Total Weight: 3,931 Lbs

Longest Length: 40-00

WEIGHT SUMMARY

SIZE	TOTAL ITEMS	TOTAL PIECES	TOTAL LBS	STRAIGHT ITEMS	STRAIGHT PIECES	STRAIGHT LBS	LIGHT BENDING ITEMS	LIGHT BENDING PIECES	LIGHT BENDING LBS	HEAVY BENDING ITEMS	HEAVY BENDING PIECES	HEAVY BENDING LBS
Rebar, Grade 60, Black												
4	2	88	955	1	28	748	0	0	0	1	60	207
5	5	429	2,649	1	4	167	1	105	949	3	320	1,533
7	1	4	327	1	4	327	0	0	0	0	0	0
	8	521	3,931	3	36	1,242	1	105	949	4	380	1,740

Total Weight: 3,931 Lbs

Longest Length: 40-00

v16.02.080 (T) (HOW) ©2018 aSa UNAUTHORIZED REPRODUCTION PROHIBITED Monday, March 26, 2018 3:01 PM

CMC Sterling Steel
2001 Britmoore
Houston, TX 77043-
Phone: (713) 690-0347 FAX: (713) 690-5758

JOB NUMBER	RELEASE NUMBER	REQ. DELIVERY DATE	PAGE
1823300796	3		1 of 1

JOB NAME: TX A&M UNIV TRANSP INSTITUT(DW — CC: 0NKW
CUSTOMER: ELLIS-MCGINNIS CONSTRUCTION CO. — BY: GL

MATERIAL TYPE: Rebar, Grade 60, Black — REFERENCE: — DRAWING ID: — DESCRIPTION: C412 BRIDGE RAIL

Itm	Qty	Size	Length	Mark	Shape	Lbs	A	B	C	D	E	F/R	G	H	J	K	O	BC
1	3	8	5-00	R3		40												0
	3.					40.												
2	170	6	6-11	U	S11	1767		6-112						3-042			0-063	TB
	170.					1767.												
3	340	5	7-01	TL-5	17	2511		4-00	3-012									AC03
4	85	5	6-03	BL	17	554		3-042	2-102									AC03
5	95	5	2-08	TB	17	265		0-07	2-01									AC03
6	40	5	2-07	UB	S11	108		2-07						1-03			0-033	AC
7	12	5	40-00	R5		501												ST
	572.					3939.												
8	160	4	7-01	TL-4	17	757		4-00	3-012									AC02
9	70	4	40-00	R4		1870												ST
	230.					2627.												
10	170	3	2-06	P	S11	160		2-06						1-022			0-023	AC
	170.					160.												

Total Weight: 8,533 Lbs

Longest Length: 40-00

WEIGHT SUMMARY

SIZE	TOTAL ITEMS	TOTAL PIECES	TOTAL LBS	STRAIGHT ITEMS	STRAIGHT PIECES	STRAIGHT LBS	LIGHT BENDING ITEMS	LIGHT BENDING PIECES	LIGHT BENDING LBS	HEAVY BENDING ITEMS	HEAVY BENDING PIECES	HEAVY BENDING LBS
Rebar, Grade 60, Black												
3	1	170	160	0	0	0	1	170	160	0	0	0
4	2	230	2,627	1	70	1,870	0	0	0	1	160	757
5	5	572	3,939	1	12	501	1	40	108	3	520	3,330
6	1	170	1,767	0	0	0	1	170	1,767	0	0	0
8	1	3	40	1	3	40	0	0	0	0	0	0
	10	1145	8,533	3	85	2,411	3	380	2,035	4	680	4,087

Total Weight: 8,533 Lbs

Longest Length: 40-00

v16.02.080 (T) (HOW) ©2018 aSa UNAUTHORIZED REPRODUCTION PROHIBITED Monday, March 26, 2018 3:02 PM

MATERIAL TEST REPORT

Date Printed: 03/14/2018

Mid American Steel & Wire

Bill to:
CMC REBAR
P O BOX 139094
DALLAS, TX 75313

Ship to:
CMC REBAR
2001 BRITTMOORE
HOUSTON, TX 77043

Customer No: 000000006015
PO Number: 4501198093
Ship Date: 03/14/2018
Order Number: 91943
Load Number: 116288

Item Number	Description
3REBAR	#3 GRADE 60 COILED REBAR

CHEMICAL ANALYSIS

Heat Number	C	Mn	P	S	Si	Cu	Ni	Cr	Mo	Sn	V	Al	N	Nb
3076185	0.3700	0.8000	0.0120	0.0320	0.2100	0.2800	0.2200	0.2100	0.0910	0.0130	0.0200	0.0010	0.0000	0.0000

MECHANICAL PROPERTIES

Heat Number	Yield (Psi/Mpa)	Tensile (Psi/Mpa)	Elongation (% 8" guage)	Bend Test Pass/Fail
3076185	76007 psi / 524 Mpa	111338 psi / 768 Mpa	12.50	Pass

I hereby certify that the above test results are correct as contained in the records of the company. All Manufacturing processes of the steel materials in this product, including melting have occurred in the United States. The material was produced and tested according to ASTM A615/A615M-065.

Quality Assurance: _____

TR No. testmo

B-14

2019-03-26

MATERIAL TEST REPORT

Date Printed: 03/29/2018

Mid American Steel & Wire

Bill to:
CMC REBAR
P O BOX 139094
DALLAS, TX 75313

Ship to:
CMC REBAR
2001 BRITTMOORE
HOUSTON, TX 77043

Customer No: 000000006015
PO Number: 4501201423
Ship Date: 03/29/2018
Order Number: 92181
Load Number: 116521

Item Number	Description
4REBAR	# 4 GRADE 60 COILED REBAR

CHEMICAL ANALYSIS

Heat Number	C	Mn	P	S	Si	Cu	Ni	Cr	Mo	Sn	V	Al	N	Nb
1820636	0.4400	0.9100	0.0160	0.0240	0.2400	0.2300	0.1700	0.2400	0.0600	0.0110	0.0020	0.0040	0.0077	0.0003

MECHANICAL PROPERTIES

Heat Number	Yield (Psi/Mpa)	Tensile (Psi/Mpa)	Elongation (% 8" guage)	Bend Test Pass/Fail
1820636	66470 psi / 458 Mpa	114647 psi / 791 Mpa	10.00	Pass

I hereby certify that the above test results are correct as contained in the records of the company. All Manufacturing processes of the steel materials in this product, including melting have occurred in the United States. The material was produced and tested according to ASTM A615/A615M-065.

Quality Assurance: _____

TR No. testno

B-15

2019-03-26



CMC STEEL TEXAS
1 STEEL MILL DRIVE
SEGUIN TX 78155-7510

CERTIFIED MILL TEST REPORT

For additional copies call
830-372-8771

We hereby certify that the test results presented here are accurate and conform to the reported grade specification

TOMMY HEWITT
Quality Assurance Manager

HEAT NO.:3078175
SECTION: REBAR 13MM (#4) 40'0" 420/60
GRADE: ASTM A615-16 Gr 420/60
ROLL DATE: 03/03/2018
MELT DATE: 02/27/2018
Cert. No.: 02/27/2018 / 078175A371

SOLD TO

SHIP TO

Delivery#:
BOL#:
CUST PO#:
CUST P/N:
DLVRY LBS / HEAT:
DLVRY PCS / HEAT:

Characteristic	Value	Characteristic	Value	Characteristic	Value
C	0.43%				
Mn	0.73%				
P	0.009%				
S	0.046%				
Si	0.19%				
Cu	0.33%				
Cr	0.10%				
Ni	0.21%				
Mo	0.079%				
V	0.000%				
Cb	0.002%				
Sn	0.014%				
Al	0.001%				
Yield Strength test 1	62.0ksi				
Tensile Strength test 1	99.2ksi				
Elongation test 1	17%				
Elongation Gage Lgth test 1	8IN				
Bend Test Diameter	1.750IN				
Bend Test 1	Passed				

The Following is true of the material represented by this MTR:

"Material is fully killed
"100% melted and rolled in the USA
"EN10204:2004 3.1 compliant
"Contains no weld repair
"Contains no Mercury contamination
"Manufactured in accordance with the latest version of the plant quality manual
"Meets the "Buy America" requirements of 23 CFR635.410

REMARKS :

04/02/2018 20:57:52
Page 1 OF 1

MATERIAL TEST REPORT

Date Printed: 03/28/2018

Mid American Steel & Wire

Bill to:
CMC REBAR
P O BOX 139094
DALLAS, TX 75313

Ship to:
CMC REBAR
2001 BRITTMOORE
HOUSTON, TX 77043

Customer No: 000000006015
PO Number: 4501201440
Ship Date: 03/28/2018
Order Number: 92187
Load Number: 116527

Item Number	Description
5REBAR	# 5 GRADE 60 COILED REBAR

CHEMICAL ANALYSIS

Heat Number	C	Mn	P	S	Si	Cu	Ni	Cr	Mo	Sn	V	Al	N	Nb
1723630	0.4600	0.8700	0.0170	0.0260	0.2000	0.2100	0.1100	0.1900	0.0300	0.0110	0.0030	0.0010	0.0067	0.0005

MECHANICAL PROPERTIES

Heat Number	Yield (Psi/Mpa)	Tensile (Psi/Mpa)	Elongation (% 8" guage)	Bend Test Pass/Fail
1723630	62474 psi / 431 Mpa	108254 psi / 747 Mpa	11.71	Pass

I hereby certify that the above test results are correct as contained in the records of the company. All Manufacturing processes of the steel materials in this product, including melting have occurred in the United States. The material was produced and tested according to ASTM A615/A615M-065.

Quality Assurance: _____

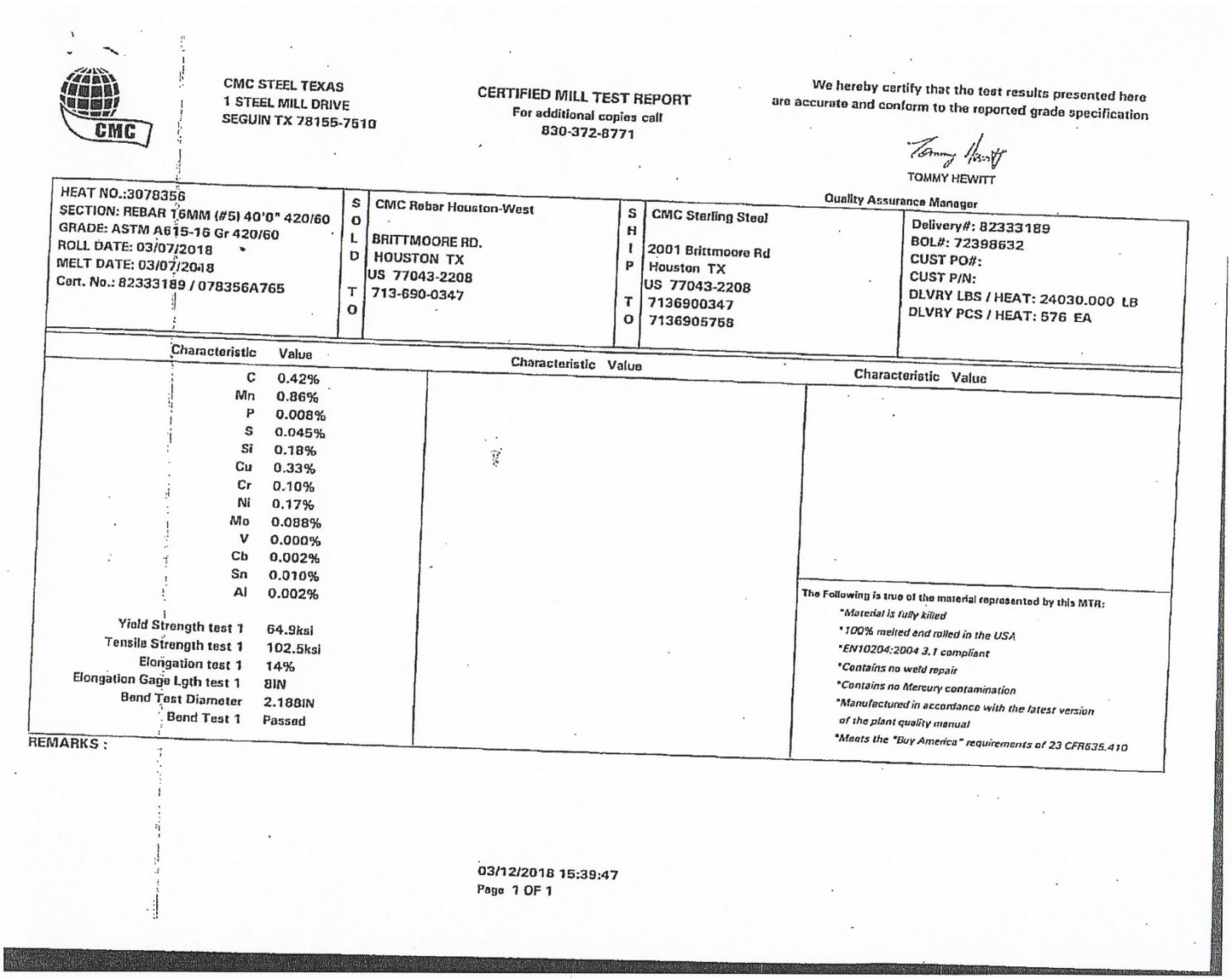

CMC STEEL TEXAS
1 STEEL MILL DRIVE
SEGUIN TX 78155-7510

CERTIFIED MILL TEST REPORT
For additional copies call
830-372-8771

We hereby certify that the test results presented here are accurate and conform to the reported grade specification

TOMMY HEWITT
Quality Assurance Manager

HEAT NO.:3078356
SECTION: REBAR 16MM (#5) 40'0" 420/60
GRADE: ASTM A615-16 Gr 420/60
ROLL DATE: 03/07/2018
MELT DATE: 03/07/2018
Cert. No.: 82333189 / 078356A765

SOLD TO
CMC Rebar Houston-West
BRITTMOORE RD.
HOUSTON TX
US 77043-2208
713-690-0347

SHIP TO
CMC Sterling Steel
2001 Brittmoore Rd
Houston TX
US 77043-2208
7136900347
7136905758

Delivery#: 82333189
BOL#: 72398632
CUST PO#:
CUST P/N:
DLVRY LBS / HEAT: 24030.000 LB
DLVRY PCS / HEAT: 576 EA

Characteristic	Value
C	0.42%
Mn	0.86%
P	0.008%
S	0.045%
Si	0.18%
Cu	0.33%
Cr	0.10%
Ni	0.17%
Mo	0.088%
V	0.000%
Cb	0.002%
Sn	0.010%
Al	0.002%
Yield Strength test 1	64.9ksi
Tensile Strength test 1	102.5ksi
Elongation test 1	14%
Elongation Gage Lgth test 1	8IN
Bend Test Diameter	2.188IN
Bend Test 1	Passed

Characteristic Value

Characteristic Value

The Following is true of the material represented by this MTR:
- *Material is fully killed
- *100% melted and rolled in the USA
- *EN10204:2004 3.1 compliant
- *Contains no weld repair
- *Contains no Mercury contamination
- *Manufactured in accordance with the latest version of the plant quality manual
- *Meets the "Buy America" requirements of 23 CFR635.410

REMARKS :

03/12/2018 15:39:47
Page 1 OF 1

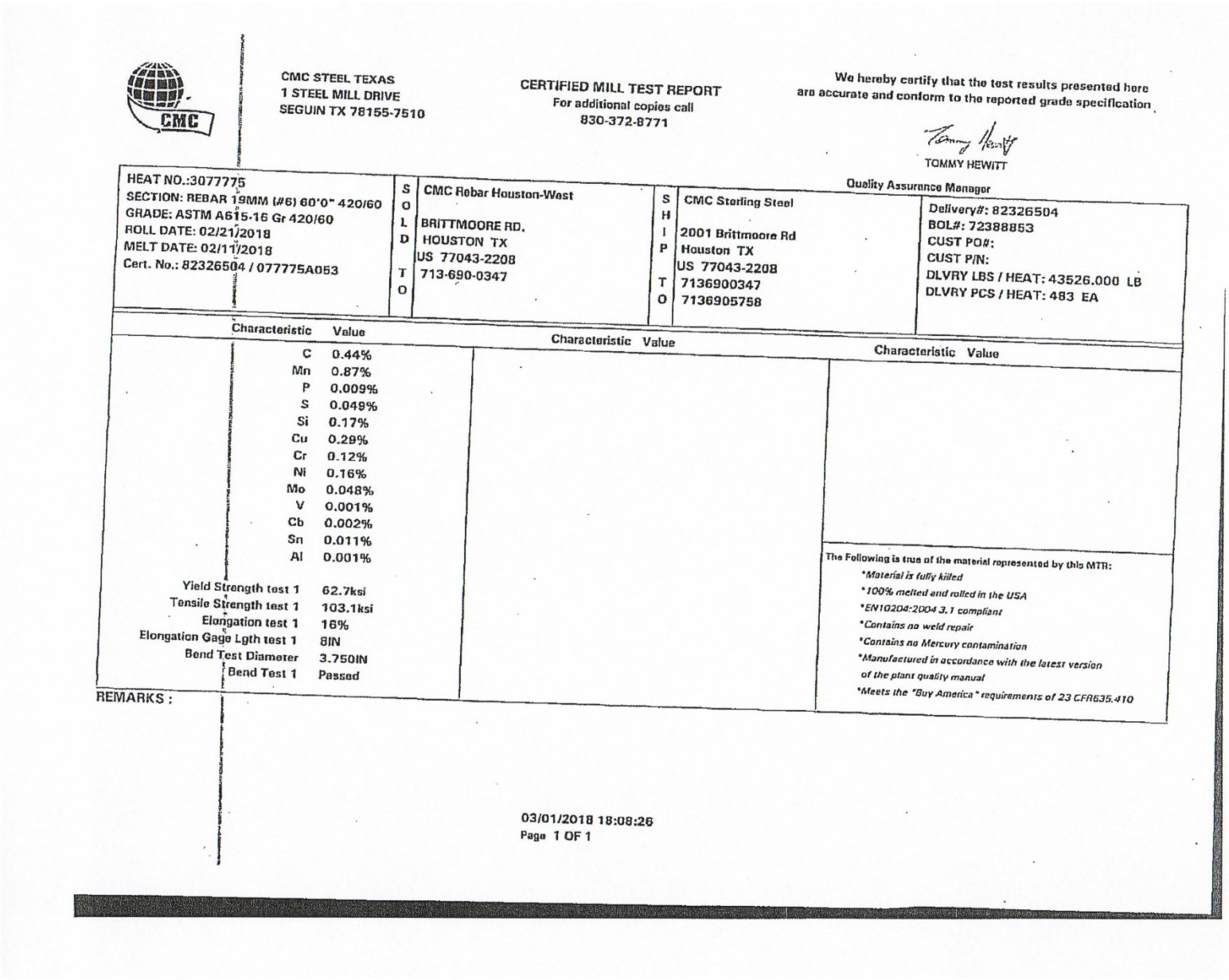

CMC STEEL TEXAS
1 STEEL MILL DRIVE
SEGUIN TX 78155-7510

CERTIFIED MILL TEST REPORT

For additional copies call
830-372-8771

We hereby certify that the test results presented here are accurate and conform to the reported grade specification

TOMMY HEWITT
Quality Assurance Manager

HEAT NO.:3077775
SECTION: REBAR 19MM (#6) 60'0" 420/60
GRADE: ASTM A615-16 Gr 420/60
ROLL DATE: 02/21/2018
MELT DATE: 02/11/2018
Cert. No.: 82326504 / 077775A053

SOLD TO
CMC Rebar Houston-West
BRITTMOORE RD.
HOUSTON TX
US 77043-2208
713-690-0347

SHIP TO
CMC Sterling Steel
2001 Brittmoore Rd
Houston TX
US 77043-2208
7136900347
7136905758

Delivery#: 82326504
BOL#: 72388853
CUST PO#:
CUST P/N:
DLVRY LBS / HEAT: 43526.000 LB
DLVRY PCS / HEAT: 483 EA

Characteristic	Value
C	0.44%
Mn	0.87%
P	0.009%
S	0.049%
Si	0.17%
Cu	0.28%
Cr	0.12%
Ni	0.16%
Mo	0.048%
V	0.001%
Cb	0.002%
Sn	0.011%
Al	0.001%

Characteristic	Value
Yield Strength test 1	62.7ksi
Tensile Strength test 1	103.1ksi
Elongation test 1	16%
Elongation Gage Lgth test 1	8IN
Bend Test Diameter	3.750IN
Bend Test 1	Passed

The Following is true of the material represented by this MTR:

*Material is fully killed
*100% melted and rolled in the USA
*EN10204:2004 3.1 compliant
*Contains no weld repair
*Contains no Mercury contamination
*Manufactured in accordance with the latest version of the plant quality manual
*Meets the "Buy America" requirements of 23 CFR635.410

REMARKS :

03/01/2018 18:08:26
Page 1 OF 1

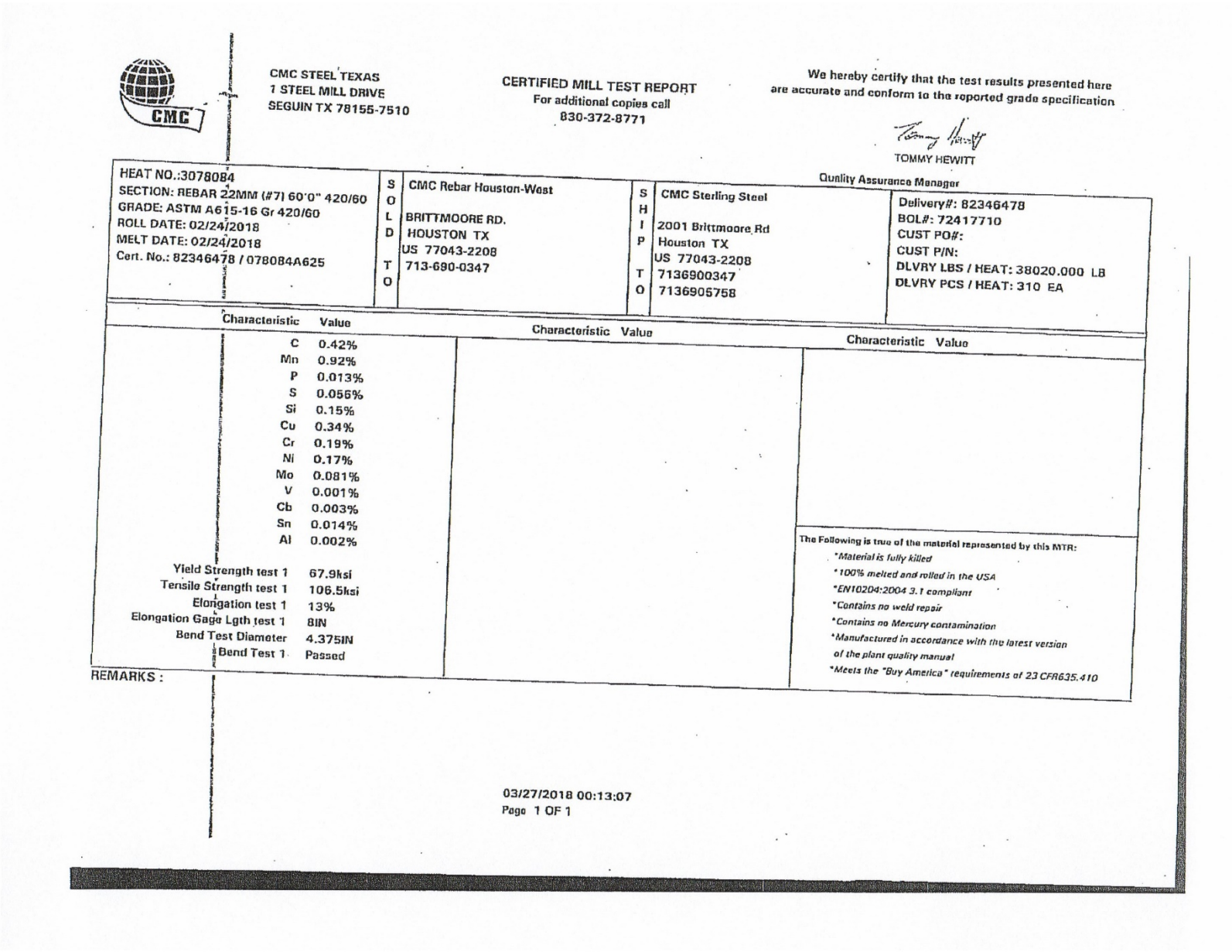

CMC STEEL TEXAS
1 STEEL MILL DRIVE
SEGUIN TX 78155-7510

CERTIFIED MILL TEST REPORT
For additional copies call
830-372-8771

We hereby certify that the test results presented here are accurate and conform to the reported grade specification

TOMMY HEWITT
Quality Assurance Manager

HEAT NO.:3078084
SECTION: REBAR 22MM (#7) 60'0" 420/60
GRADE: ASTM A615-16 Gr 420/60
ROLL DATE: 02/24/2018
MELT DATE: 02/24/2018
Cert. No.: 82346478 / 078084A625

SOLD TO
CMC Rebar Houston-West
BRITTMOORE RD.
HOUSTON TX
US 77043-2208
713-690-0347

SHIP TO
CMC Sterling Steel
2001 Brittmoore Rd
Houston TX
US 77043-2208
7136900347
7136905758

Delivery#: 82346478
BOL#: 72417710
CUST PO#:
CUST P/N:
DLVRY LBS / HEAT: 38020.000 LB
DLVRY PCS / HEAT: 310 EA

Characteristic	Value
C	0.42%
Mn	0.92%
P	0.013%
S	0.056%
Si	0.15%
Cu	0.34%
Cr	0.19%
Ni	0.17%
Mo	0.081%
V	0.001%
Cb	0.003%
Sn	0.014%
Al	0.002%
Yield Strength test 1	67.9ksi
Tensile Strength test 1	106.5ksi
Elongation test 1	13%
Elongation Gage Lgth test 1	8IN
Bend Test Diameter	4.375IN
Bend Test 1	Passed

Characteristic	Value

Characteristic	Value

The Following is true of the material represented by this MTR:
- *Material is fully killed
- *100% melted and rolled in the USA
- *EN10204:2004 3.1 compliant
- *Contains no weld repair
- *Contains no Mercury contamination
- *Manufactured in accordance with the latest version of the plant quality manual
- *Meets the "Buy America" requirements of 23 CFR635.410

REMARKS :

03/27/2018 00:13:07
Page 1 OF 1

Wall and Deck and Parapet

Texas A&M Transportation Institute

Roadside Safety and Physical Security Division - Proving Ground

Project #469468-2 C412

Drawn by BLG

Sheet 1 of 1 Wall and Deck

T:\1-ProjectFiles\469468 - TxDOT - Bligh\2 C412 Bridge Rail\Drafting, C412\469468-2, C412, Concrete Sampling Map

Texas A&M Transportation Institute Proving Ground 3100 SH 47, Bldg 7091 Bryan, TX 77807 Texas A&M University College Station, TX 77843 Phone 979-845-6375	5.7.2 Concrete Sampling	Doc. No. QPF 5.7.2	Revision Date: 2018-04-17
Quality Policy Form	Revised by: B. L. Griffith Approved by: D. Kuhn	Revision: 6	Page: 1 of 1

Project No: 469468-2 **Casting Date:** 2018-05-14 **Mix Design (psi):** 4000

Printed Name of Technician taking Sample: _____

Printed Name of Technician breaking Sample: Matt Robinson

Signed Name of Technician taking Sample: _____

Signed Name of Technician breaking Sample: [signature]

Load No.	Truck No.	Ticket No.	Location (from concrete map)
T1	390 126	20012285	WALL + DECK, LEFT 35'
T2	39RENTAL 2	20012286	" MIDDLE 40'
T3	39RENTAL 1	20012288	" RIGHT SIDE REMAINDER

Load No.	Break Date	Cylinder Age	Total Load (lbs)	Break (psi)	Average
T1	2018-06-15	32 days	5836	165000	
T1	"	"	6084	172000	5930
T1	"	"	5871	166000	
T2	2018-06-15	32 days	6225	176000	
T2	"	"	6154	174000	6201
T2	"	"	6225	176000	
T3	2018-06-15	32 days	5341	151000	
T3	"	"	5553	157000	5590
T3	"	"	5836	165000	

KNIFE RIVER
AN MDU RESOURCES COMPANY

SOUTH REGION/MAIN OFFICE
6310 State Highway 21 West
Bryan, TX 77807
PH: (979) 361-2900
FAX: (979) 361-2920

RB 0021176

SOLD TO
Riverbend

ELLIS-MCGINNIS CONSTRUC
P.O. BOX 40
EDDY

Disp Order#: 2011

SHIP TO
TAMU TRANSPORTATION INSTITUTE
LF47 LF RELLIS CAMPUS RT AT THE
STOP SIGN 2ND STOP TAKE A LF 2ND
STOP TAKE A RT GO 2 STOP SIGN D
OWN TAKE A LF GO TO MORE STOP SI
GN DOWN TAKE RT GO THE NEXT STOP

TIME	FORMULA	LOAD SIZE	YARDS ORDERED	PO#	DRIVER/TRUCK		PLANT TRANSACTION #
9:26:55	CLSLS	10.00	20.00	2801	FREDRICK	390126	
DATE		**LOAD #**	**YARDS DEL.**	**BATCH #**	**WATER TRIM**	**SLUMP**	**TICKET NUMBER**
05/14/18	PROJECT TAMUTRANS	1	10.00			5.00 in	20012285

WARNING
IRRITATING TO THE SKIN AND EYES
Contains Portland Cement. Wear Rubber Boots and Gloves, PROLONGED CONTACT MAY CAUSE BURNS. Avoid Contact With Eyes and Prolonged Contact With Skin. In Case of Contact With Skin or Eyes, Flush Thoroughly With Water. If Irritation Persists, Get Medical Attention.**KEEP CHILDREN AWAY.**

CONCRETE is a PERISHABLE COMMODITY and BECOMES THE PROPERTY of the PURCHASER UPON LEAVING the PLANT. ANY CHANGES or CANCELLATION of ORIGINAL INSTRUCTIONS MUST be TELEPHONED to the OFFICE BEFORE **LOADING** starts.
The undersigned promises to pay all costs, including reasonable attorney's fees, incurred in collecting any sums owed.
All accounts not paid within 30 days of delivery will bear interest at the rate of 18% per annum.
Not Responsible for Reactive Aggregate or Color Quality. No Claim Allowed Unless Made at Time Material is Delivered.
A $15.00 Service Charge and Loss of the Cash Discount will be Collected on all Returned Checks.
Excess Delay Time Charged @ $75.00/hr.

PROPERTY DAMAGE RELEASE
(TO BE SIGNED IF DELIVERY TO BE MADE INSIDE CURB LINE)
Dear Customer - The driver of this truck in presenting this RELEASE to you for your signature is of the opinion that the size and weight of this truck may possibly cause damage to the premises and/or adjacent property if he places the material in this load where you desire it. It is our wish to help you in every way that we can, but in order to do this the driver is requesting that you sign this RELEASE relieving him and this supplier from any responsibility from damage that may occur to the premises and/or adjacent property, buildings, sidewalks, drive-ways, curbs, etc., by the delivery of this material, and that you also agree to help him remove mud from the wheels of his vehicle so that he will not litter the public street. Further, as additional consideration; the undersigned agrees to indemnify and hold harmless the driver of this truck and this supplier for any and all damage to the premises and/or adjacent property which may be claimed by anyone to have arisen out of delivery of this order.
SIGNED:
X

Excessive Water is Detrimental to Concrete Performance.
H_2O Added by Request / Authorized By:
GAL X
WEIGHTMASTER

Thank you for your business

NOTICE: MY SIGNATURE BELOW INDICATES THAT I HAVE READ THE HEALTH WARNING NOTICE AND SUPPLIER WILL NOT BE RESPONSIBLE FOR ANY DAMAGE CAUSED WHEN DELIVERING INSIDE CURB LINE.
LOAD RECEIVED BY
x

QUANTITY	CODE	DESCRIPTION	UNIT PRICE	EXTENDED PRICE
10.00 yc	CLSLS	CLASS S 4000 PSI		

OUR MIXES ARE DESIGNED TO ACHIEVE SPECIFICATIONS AT A MAX 4" SLUMP

RETURNED TO PLANT	LEFT JOB	FINISH UNLOADING	ON SITE TESTING		AIR TEMP
			TESTING LAB:		
LEFT PLANT	**ARRIVED JOB**	**START UNLOADING**	**SLUMP**	**CONCRETE TEMP.**	
9:40	7:50				
TOTAL ROUND TRIP	**TOTAL AT JOB**	**UNLOADING TIME**	**AIR**	**CYLINDERS**	

Max
Prev AMT
Ticket Total
Grand Total
ADDITIONAL CHARGE 1
ADDITIONAL CHARGE 2
GRAND TOTAL

Truck	Driver	User	Disp Ticket Num	Ticket ID	Time	Date
390126	424514	user	20012285	12243	9:26	

RB 0021176

Load Size	Mix Code	Returned	Qty	Mix Age	Seq	Load ID
10.00 CYDS	CLSLS				D	11

Material	Design Qty	Required	Batched	%Var	%Moisture	Actual	Wat
CEMENT	417.00 lb	4170.00 lb	4162.00 lb	0.29%			
FLYASH	143.00 lb	1430.00 lb	1418.00 lb	-0.84%			
SAND	1223 lb	12315 lb	12330 lb	-0.50%	5.67%M	82 gl	
LMSTN1"	1380 lb	13835 lb	13870 lb	0.26%	0.25%M	4 gl	
GRAVEL3/8"	460 lb	4623 lb	4630 lb	0.15%	0.50%M	3 gl	
WATER	252 lb	1611 lb	1608 lb	-0.17%		193 gl	
POZZ80	25.00 oz	250.00 oz	250.00 oz	0.00%			
AE-90	3.00 oz	30.00 oz	30.00 oz	0.00%			

Actual
Num Batches: 1
Load 38576 lb | Design W/C: 0.450 | Water/Cement: 0.450 T | Design 302.0 gl | Actual 281.3 gl | To Add 20.7 gl
Slump: 5.00 in | Water in Truck: 0.0 gl | Adjust Water: 0.0 gl / Load | Trim Water: -2.0 gl / CYC
Actual W/C Ratio: 0.419 | Actual Water: 281 gl | Batched Cement: 5600 lb | Allowable Water: 172 gl

KNIFE RIVER
AN MDU RESOURCES COMPANY

SOUTH REGION/MAIN OFFICE
6310 State Highway 21 West
Bryan, TX 77807
PH: (979) 361-2900
FAX: (979) 361-2920

RB 0021177

SOLD TO:
Riverbend

ELLIS-MCGINNIS CONSTRUC
P.O. BOX 40
EDDY

SHIP TO:
TAMU TRANSPORTATION INSTITUTE
LF47 LF RELLIS CAMPUS RT AT THE
STOP SIGN 2ND STOP TAKE A LF 2ND
STOP TAKE A RT GO 2 STOP SIGN D
OWN TAKE A LF GO TO MORE STOP SI
GN DOWN TAKE RT GO THE NEXT STOP

Disp Order#: 2011

TIME	FORMULA	LOAD SIZE	YARDS ORDERED	PO#	DRIVER/TRUCK		PLANT TRANSACTION #
9:57:47	CLSLS	10.00	20.00	2001	BIG TRANS 39RENTAL2		
DATE	**LOAD #**	**YARDS DEL.**	**BATCH #**	**WATER TRIM**	**SLUMP**		**TICKET NUMBER**
05/14/18	PROJECT TAMUTRANS	2	20.00		5.00 in		20012286

WARNING
IRRITATING TO THE SKIN AND EYES

Contains Portland Cement. Wear Rubber Boots and Gloves, PROLONGED CONTACT MAY CAUSE BURNS. Avoid Contact With Eyes and Prolonged Contact With Skin. In Case of Contact With Skin or Eyes, Flush Thoroughly With Water. If Irritation Persists, Get Medical Attention. **KEEP CHILDREN AWAY.**

CONCRETE is a PERISHABLE COMMODITY and BECOMES THE PROPERTY of the PURCHASER UPON LEAVING the PLANT. ANY CHANGES or CANCELLATION of ORIGINAL INSTRUCTIONS MUST be TELEPHONED to the OFFICE BEFORE **LOADING** starts.

The undersigned promises to pay all costs, including reasonable attorney's fees, incurred in collecting any sums owed.

All accounts not paid within 30 days of delivery will bear interest at the rate of 18% per annum.

Not Responsible for Reactive Aggregate or Color Quality. No Claim Allowed Unless Made at Time Material is Delivered.

A $15.00 Service Charge and Loss of the Cash Discount will be Collected on all Returned Checks.

Excess Delay Time Charged @ $75.00/hr.

PROPERTY DAMAGE RELEASE
(TO BE SIGNED IF DELIVERY TO BE MADE INSIDE CURB LINE)

Dear Customer - The driver of this truck in presenting this RELEASE to you for your signature is of the opinion that the size and weight of this truck may possibly cause damage to the premises and/or adjacent property if he places the material in this load where you desire it. It is our wish to help you in every way that we can, but in order to do this the driver is requesting that you sign this RELEASE relieving him and this supplier from any responsibility from damage that may occur to the premises and or adjacent property, buildings, sidewalks, drive-ways, curbs, etc., by the delivery of this material, and that you also agree to help him remove mud from the wheels of his vehicle so that he will not litter the public street. Further, as additional consideration; the undersigned agrees to indemnify and hold harmless the driver of this truck and this supplier for any and all damage to the premises and/or adjacent property which may be claimed by anyone to have arisen out of delivery of this order.

SIGNED:

X

Excessive Water is Detrimental to Concrete Performance.
H_2O Added by Request / Authorized By:

GAL X

WEIGHMASTER

Thank you for your business

NOTICE: MY SIGNATURE BELOW INDICATES THAT I HAVE READ THE HEALTH WARNING NOTICE AND SUPPLIER WILL NOT BE RESPONSIBLE FOR ANY DAMAGE CAUSED WHEN DELIVERING INSIDE CURB LINE.

LOAD RECEIVED BY

X

QUANTITY	CODE	DESCRIPTION	OUR MIXES ARE DESIGNED TO ACHIEVE SPECIFICATIONS AT A MAX 4" SLUMP	UNIT PRICE	EXTENDED PRICE
10.00 yc	CLSLS	CLASS S 4000 PSI			

RETURNED TO PLANT	LEFT JOB	FINISH UNLOADING	ON SITE TESTING		AIR TEMP
			TESTING LAB:		
LEFT PLANT	ARRIVED JOB	START UNLOADING	SLUMP	CONCRETE TEMP.	
1012					
TOTAL ROUND TRIP	TOTAL AT JOB	UNLOADING TIME	AIR	CYLINDERS	

Tax
Prev. AMT
Ticket Total
Grand Total

ADDITIONAL CHARGE 1

ADDITIONAL CHARGE 2

GRAND TOTAL

Truck	Driver	User	Disp Ticket Num	Ticket ID	Time	Date
39RENTAL2	2	user	20012286	12244	9:57	

RB 0021177

Load Size	Mix Code	Returned	Qty	Mix Age	Seq	Load ID
10.00 CYDS	CLSLS				D	12

Material	Design Qty	Required	Batched		% Var	% Moisture	Actual	Wat
CEMENT	417.00 lb	4170.00 lb	4184.00 lb		0.34%			
FLYASH	143.00 lb	1430.00 lb	1418.00 lb		-0.84%			
SAND	1223 lb	12915 lb	12880 lb		-0.27%	5.60% M	82 gl	
LMSTN#*	1380 lb	13835 lb	13800 lb		-0.25%	0.25% M	4 gl	
GRAVEL3/8"	460 lb	4623 lb	9000 lb	>	8.15%	0.50% M	3 gl	
WATER	252 lb	1611 lb	1612 lb		0.08%		193 gl	
POZZ80	25.00 oz	260.00 oz	250.00 oz		0.00%			
AE-90	3.00 oz	30.00 oz	30.00 oz		0.00%			

Actual Num Batches: 1
Load 38912 lb Design W/C: 0.450 Water/Cement: 0.450 T Design 302.0 gl Actual 282.1 gl To Add: 19.9 gl
Slump: 5.00 in Water in Truck: 0.0 gl Adjust Water: 0.0 gl / Load Trim Water: -2.0 gl / CYD
Actual W/C Ratio: 0.420 Actual Water: 282 gl Batched Cement: 5602 lb Allowable Water: 165 gl

KNIFE RIVER
AN MDU RESOURCES COMPANY

SOUTH REGION/MAIN OFFICE
6310 State Highway 21 West
Bryan, TX 77807
PH: (979) 361-2900
FAX: (979) 361-2920

RB 0021179

SOLD TO:
Riverbend

ELLIS-MCGINNIS CONSTRUC
P.O. BOX 40
EDDY

SHIP TO:
OMNI7
TAMU TRANSPORTATION INSTITUTE
LF47 LF RELLIS CAMPUS RT AT THE
STOP SIGN 2ND STOP TAKE A LF 2ND
STOP TAKE A RT GO 2 STOP SIGN D
OWN TAKE A LF GO TO MORE STOP SI
GN DOWN TAKE RT GO TWO NEXT STOP

TIME	FORMULA	LOAD SIZE	YARDS ORDERED	PO#	DRIVER/TRUCK		PLANT TRANSACTION #
DATE		LOAD #	YARDS DEL.	BATCH #	WATER TRIM	SLUMP	TICKET NUMBER
05/14/18	PROJECT TAMUTRANS	3	30.00			5.00 in	20012288

WARNING
IRRITATING TO THE SKIN AND EYES
Contains Portland Cement. Wear Rubber Boots and Gloves, PROLONGED CONTACT MAY CAUSE BURNS. Avoid Contact With Eyes and Prolonged Contact With Skin. In Case of Contact With Skin or Eyes, Flush Thoroughly With Water. If Irritation Persists, Get Medical Attention.**KEEP CHILDREN AWAY.**

CONCRETE is a PERISHABLE COMMODITY and BECOMES THE PROPERTY of the PURCHASER UPON LEAVING the PLANT. ANY CHANGES or CANCELLATION of ORIGINAL INSTRUCTIONS MUST be TELEPHONED to the OFFICE BEFORE **LOADING** starts.
The undersigned promises to pay all costs, including reasonable attorney's fees, incurred in collecting any sums owed.
All accounts not paid within 30 days of delivery will bear interest at the rate of 18% per annum.
Not Responsible for Reactive Aggregate or Color Quality. No Claim Allowed Unless Made at Time Material is Delivered.
A $15.00 Service Charge and Loss of the Cash Discount will be Collected on all Returned Checks.
Excess Delay Time Charged @ $75.00/hr.

PROPERTY DAMAGE RELEASE
(TO BE SIGNED IF DELIVERY TO BE MADE INSIDE CURB LINE)
Dear Customer - The driver of this truck in presenting this RELEASE to you for your signature is of the opinion that the size and weight of this truck may possibly cause damage to the premises and/or adjacent property if he places the material in this load where you desire it. It is our wish to help you in every way that we can, but in order to do this the driver is requesting that you sign this RELEASE relieving him and this supplier from any responsibility from damage that may occur to the premises and or adjacent property, buildings, sidewalks, drive-ways, curbs, etc., by the delivery of this material, and that you also agree to help him remove mud from the wheels of his vehicle so that he will not litter the public street. Further, as additional consideration, the undersigned agrees to indemnify and hold harmless the driver of this truck and this supplier for any and all damage to the premises and/or adjacent property which may be claimed by anyone to have arisen out of delivery of this order.
SIGNED:
X

Excessive Water is Detrimental to Concrete Performance.
H_2O Added by Request / Authorized By:
GAL X
WEIGHMASTER

Thank you for your business

NOTICE: MY SIGNATURE BELOW INDICATES THAT I HAVE READ THE HEALTH WARNING NOTICE AND SUPPLIER WILL NOT BE RESPONSIBLE FOR ANY DAMAGE CAUSED WHEN DELIVERING INSIDE CURB LINE.
LOAD RECEIVED BY
X

QUANTITY	CODE	DESCRIPTION	UNIT PRICE	EXTENDED PRICE
10.00 yd	CLSLS	CLASS S 4000 PSI HyPot		

RETURNED TO PLANT	LEFT JOB	FINISH UNLOADING	ON SITE TESTING		AIR TEMP
			TESTING LAB:		
LEFT PLANT	ARRIVED JOB	START UNLOADING	SLUMP	CONCRETE TEMP.	
10:42	10:57				
TOTAL ROUND TRIP	TOTAL AT JOB	UNLOADING TIME	AIR	CYLINDERS	

Tax
Prev. AMT
Ticket Total
Grand Total
ADDITIONAL CHARGE 1
ADDITIONAL CHARGE 2
GRAND TOTAL

Truck	Driver	User	Disp Ticket Num	Ticket ID	Time	Date
39RENTAL1	1	user	20012288	12246	10:2	

RB 0021179

Load Size	Mix Code	Returned	Qty	Mix Age	Seq	Load ID
10.00 CYDS	CLSLS				D	14

Material	Design Qty	Required	Batched		% Var	% Moisture	Actual	Wat
CEMENT	417.00 lb	4170.00 lb	4148.00 lb		-0.53%			
FLYASH	143.00 lb	1430.00 lb	1448.00 lb		1.26%			
SAND	1223 lb	13096 lb	13130 lb		0.57%	6.75% M	93 gl	
LMSTN1"	1380 lb	13835 lb	13720 lb		-0.83%	0.25% M	4 gl	
GRAVEL3/8"	460 lb	4623 lb	4980 lb	>	7.94%	0.50% M	3 gl	
WATER	252 lb	1470 lb	1469 lb		-0.07%		176 gl	
POZZ80	25.00 oz	250.00 oz	250.00 oz		0.00%			
AE-90	3.00 oz	30.00 oz	30.00 oz		0.00%			

Actual Num Batches: 1
Load 38323 lb Design W/C: 0.450 Water/Cement: 0.450 T Design 302.0 gl Actual 282.6 gl To Add: 19.4 gl
Slump: 5.00 in Water In Truck: 0.0 gl Adjust Water: 0.0 gl / Load Trim Water: -2.0 gl / CYD
Actual W/C Ratio: 0.421 Actual Water: 283 gl Batched Cement: 5696 lb Allowable Water: 159 gl

Texas A&M Transportation Institute Proving Ground 3100 SH 47, Bldg 7091 Bryan, TX 77807 Texas A&M University College Station, TX 77843 Phone 979-845-6375	5.7.2 Concrete Sampling	Doc. No. QPF 5.7.2	Revision Date: 2018-04-17
Quality Policy Form	Revised by: B. L. Griffith Approved by: D. Kuhn	Revision: 6	Page: 1 of 1

Project No: 4/5468-2 **Casting Date:** 2018-05-23 **Mix Design (psi):** 4000

Printed Name of Technician taking Sample: GREG FRITZ

Printed Name of Technician breaking Sample: Matt Robinson

Signed Name of Technician taking Sample:

Signed Name of Technician breaking Sample:

Load No.	Truck No.	Ticket No.	Location (from concrete map)
P1/T1	390121	0042278	North Side Parapet (Half)
P2/T2	390145	0042283	South Side Parapet (Half)

Load No.	Break Date	Cylinder Age	Total Load (lbs)	Break (psi)	Average
P1/T1	2018/06/15	23 days	5305	150000	
P1/T1	"	"	5588	158000	5493
P1/T1	"	"	5588	158000	
P2/T2	2018/06/15	23 days	5606	158500	
P2/T2	"	"	5624	159000	5570
P2/T2	"	"	5482	155000	

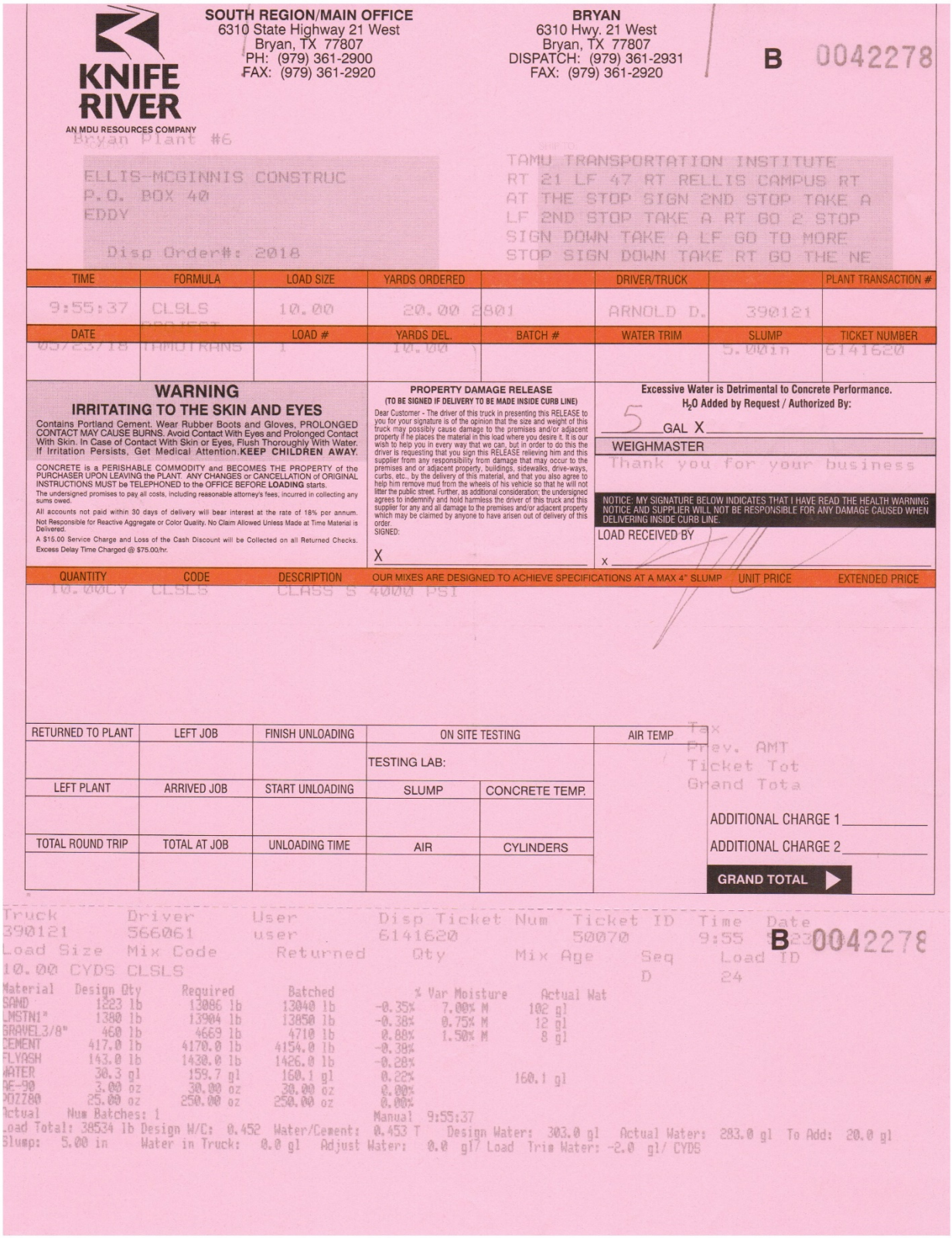

KNIFE RIVER
AN MDU RESOURCES COMPANY

SOUTH REGION/MAIN OFFICE
6310 State Highway 21 West
Bryan, TX 77807
PH: (979) 361-2900
FAX: (979) 361-2920

BRYAN
6310 Hwy. 21 West
Bryan, TX 77807
DISPATCH: (979) 361-2931
FAX: (979) 361-2920

B 0042278

Bryan Plant #6

ELLIS-MCGINNIS CONSTRUC
P.O. BOX 40
EDDY

Disp Order#: 2018

TAMU TRANSPORTATION INSTITUTE
RT 21 LF 47 RT RELLIS CAMPUS RT
AT THE STOP SIGN 2ND STOP TAKE A
LF 2ND STOP TAKE A RT GO 2 STOP
SIGN DOWN TAKE A LF GO TO MORE
STOP SIGN DOWN TAKE RT GO THE NE

TIME	FORMULA	LOAD SIZE	YARDS ORDERED		DRIVER/TRUCK		PLANT TRANSACTION #
9:55:37	CLSLS	10.00	20.00	2801	ARNOLD D.	390121	
DATE		**LOAD #**	**YARDS DEL.**	**BATCH #**	**WATER TRIM**	**SLUMP**	**TICKET NUMBER**
05/23/18	TAMUTRANS	1	10.00			5.00in	6141620

WARNING
IRRITATING TO THE SKIN AND EYES
Contains Portland Cement. Wear Rubber Boots and Gloves, PROLONGED CONTACT MAY CAUSE BURNS. Avoid Contact With Eyes and Prolonged Contact With Skin. In Case of Contact With Skin or Eyes, Flush Thoroughly With Water. If Irritation Persists, Get Medical Attention. **KEEP CHILDREN AWAY.**

CONCRETE is a PERISHABLE COMMODITY and BECOMES THE PROPERTY of the PURCHASER UPON LEAVING the PLANT. ANY CHANGES or CANCELLATION of ORIGINAL INSTRUCTIONS MUST be TELEPHONED to the OFFICE BEFORE **LOADING** starts.
The undersigned promises to pay all costs, including reasonable attorney's fees, incurred in collecting any sums owed.
All accounts not paid within 30 days of delivery will bear interest at the rate of 18% per annum.
Not Responsible for Reactive Aggregate or Color Quality. No Claim Allowed Unless Made at Time Material is Delivered.
A $15.00 Service Charge and Loss of the Cash Discount will be Collected on all Returned Checks.
Excess Delay Time Charged @ $75.00/hr.

PROPERTY DAMAGE RELEASE
(TO BE SIGNED IF DELIVERY TO BE MADE INSIDE CURB LINE)
Dear Customer - The driver of this truck in presenting this RELEASE to you for your signature is of the opinion that the size and weight of this truck may possibly cause damage to the premises and/or adjacent property if he places the material in this load where you desire it. It is our wish to help you in every way that we can, but in order to do this the driver is requesting that you sign this RELEASE relieving him and this supplier from any responsibility from damage that may occur to the premises and or adjacent property, buildings, sidewalks, drive-ways, curbs, etc., by the delivery of this material, and that you also agree to help him remove mud from the wheels of his vehicle so that he will not litter the public street. Further, as additional consideration; the undersigned agrees to indemnify and hold harmless the driver of this truck and this supplier for any and all damage to the premises and/or adjacent property which may be claimed by anyone to have arisen out of delivery of this order.
SIGNED:
X

Excessive Water is Detrimental to Concrete Performance.
H_2O Added by Request / Authorized By:
5 GAL X
WEIGHMASTER
Thank you for your business

NOTICE: MY SIGNATURE BELOW INDICATES THAT I HAVE READ THE HEALTH WARNING NOTICE AND SUPPLIER WILL NOT BE RESPONSIBLE FOR ANY DAMAGE CAUSED WHEN DELIVERING INSIDE CURB LINE.
LOAD RECEIVED BY
X

QUANTITY	CODE	DESCRIPTION	OUR MIXES ARE DESIGNED TO ACHIEVE SPECIFICATIONS AT A MAX 4" SLUMP	UNIT PRICE	EXTENDED PRICE
10.00CY	CLSLS	CLASS S 4000 PSI			

RETURNED TO PLANT	LEFT JOB	FINISH UNLOADING	ON SITE TESTING	AIR TEMP
			TESTING LAB:	

LEFT PLANT	ARRIVED JOB	START UNLOADING	SLUMP	CONCRETE TEMP.

TOTAL ROUND TRIP	TOTAL AT JOB	UNLOADING TIME	AIR	CYLINDERS

Tax
Prev. AMT
Ticket Tot
Grand Tota

ADDITIONAL CHARGE 1 _____
ADDITIONAL CHARGE 2 _____
GRAND TOTAL ▶

Truck	Driver	User	Disp Ticket Num	Ticket ID	Time	Date
390121	566061	user	6141620	50070	9:55	B 0042278

Load Size	Mix Code	Returned	Qty	Mix Age	Seq	Load ID
10.00 CYDS	CLSLS				D	24

Material	Design Qty	Required	Batched	% Var	Moisture	Actual Wat
SAND	1223 lb	13086 lb	13040 lb	-0.35%	7.00% M	102 gl
LMSTN1*	1380 lb	13904 lb	13850 lb	-0.38%	0.75% M	12 gl
GRAVEL3/8"	460 lb	4669 lb	4710 lb	0.88%	1.50% M	8 gl
CEMENT	417.0 lb	4170.0 lb	4154.0 lb	-0.38%		
FLYASH	143.0 lb	1430.0 lb	1426.0 lb	-0.28%		
WATER	30.3 gl	159.7 gl	160.1 gl	0.22%		160.1 gl
AE-90	3.00 oz	30.00 oz	30.00 oz	0.00%		
POZZ80	25.00 oz	250.00 oz	250.00 oz	0.00%		

Actual Num Batches: 1 Manual 9:55:37
Load Total: 38534 lb Design W/C: 0.452 Water/Cement: 0.453 T Design Water: 303.0 gl Actual Water: 283.0 gl To Add: 20.0 gl
Slump: 5.00 in Water in Truck: 0.0 gl Adjust Water: 0.0 gl/ Load Trim Water: -2.0 gl/ CYDS

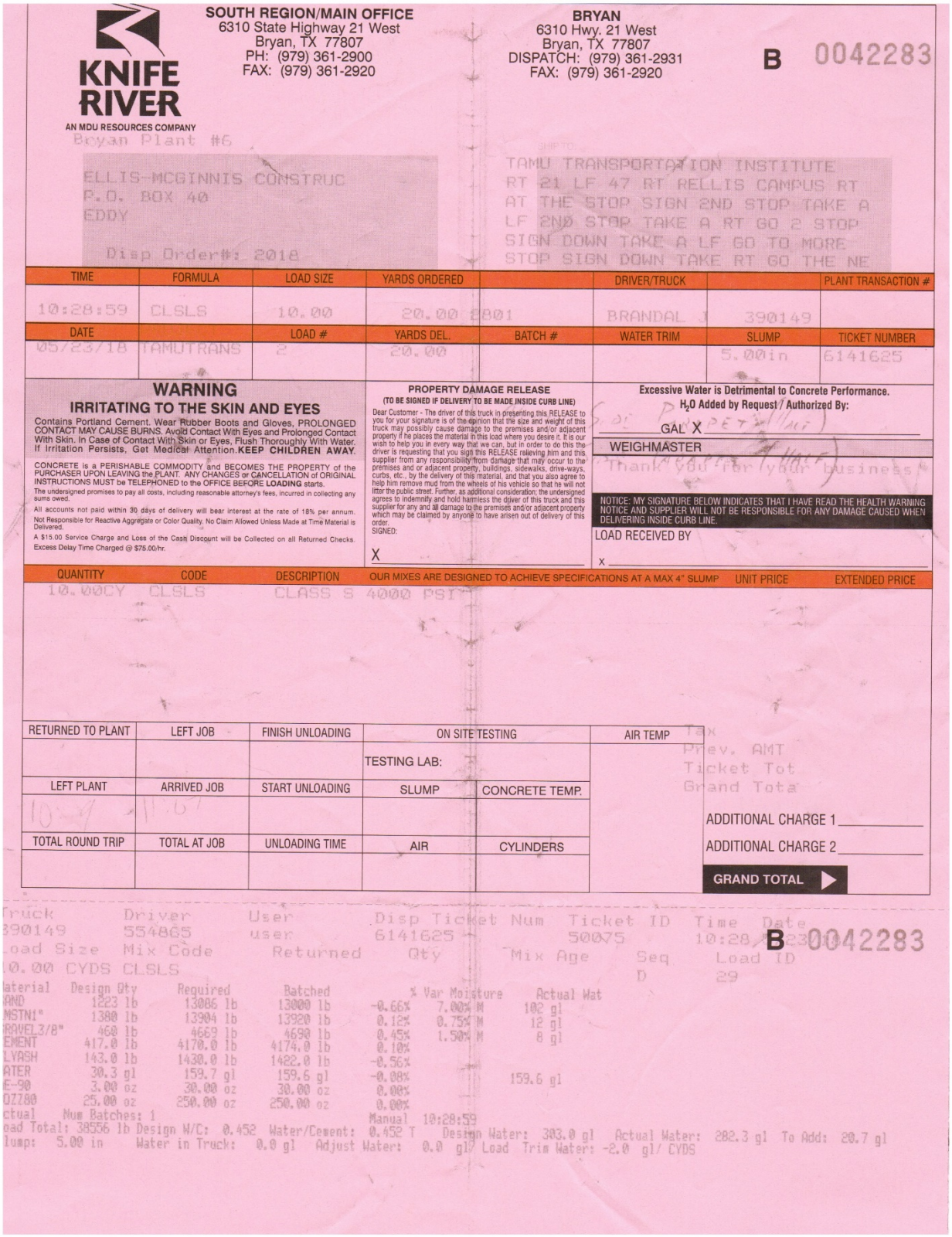

KNIFE RIVER
AN MDU RESOURCES COMPANY

SOUTH REGION/MAIN OFFICE
6310 State Highway 21 West
Bryan, TX 77807
PH: (979) 361-2900
FAX: (979) 361-2920

BRYAN
6310 Hwy. 21 West
Bryan, TX 77807
DISPATCH: (979) 361-2931
FAX: (979) 361-2920

B 0042283

Bryan Plant #6

ELLIS-MCGINNIS CONSTRUC
P.O. BOX 40
EDDY

Disp Order#: 2018

SHIP TO:
TAMU TRANSPORTATION INSTITUTE
RT 21 LF 47 RT RELLIS CAMPUS RT
AT THE STOP SIGN 2ND STOP TAKE A
LF 2ND STOP TAKE A RT GO 2 STOP
SIGN DOWN TAKE A LF GO TO MORE
STOP SIGN DOWN TAKE RT GO THE NE

TIME	FORMULA	LOAD SIZE	YARDS ORDERED		DRIVER/TRUCK		PLANT TRANSACTION #
10:28:59	CLSLS	10.00	20.00	2801	BRANDAL J	390149	
DATE		**LOAD #**	**YARDS DEL.**	**BATCH #**	**WATER TRIM**	**SLUMP**	**TICKET NUMBER**
05/23/18	TAMUTRANS	2	20.00			5.00in	6141625

WARNING
IRRITATING TO THE SKIN AND EYES
Contains Portland Cement. Wear Rubber Boots and Gloves, PROLONGED CONTACT MAY CAUSE BURNS. Avoid Contact With Eyes and Prolonged Contact With Skin. In Case of Contact With Skin or Eyes, Flush Thoroughly With Water. If Irritation Persists, Get Medical Attention. **KEEP CHILDREN AWAY.**

CONCRETE is a PERISHABLE COMMODITY and BECOMES THE PROPERTY of the PURCHASER UPON LEAVING the PLANT. ANY CHANGES or CANCELLATION of ORIGINAL INSTRUCTIONS MUST be TELEPHONED to the OFFICE BEFORE LOADING starts.
The undersigned promises to pay all costs, including reasonable attorney's fees, incurred in collecting any sums owed.
All accounts not paid within 30 days of delivery will bear interest at the rate of 18% per annum.
Not Responsible for Reactive Aggregate or Color Quality. No Claim Allowed Unless Made at Time Material is Delivered.
A $15.00 Service Charge and Loss of the Cash Discount will be Collected on all Returned Checks.
Excess Delay Time Charged @ $75.00/hr.

PROPERTY DAMAGE RELEASE
(TO BE SIGNED IF DELIVERY TO BE MADE INSIDE CURB LINE)
Dear Customer - The driver of this truck in presenting this RELEASE to you for your signature is of the opinion that the size and weight of this truck may possibly cause damage to the premises and/or adjacent property if he places the material in this load where you desire it. It is our wish to help you in every way that we can, but in order to do this the driver is requesting that you sign this RELEASE relieving him and this supplier from any responsibility from damage that may occur to the premises and or adjacent property, buildings, sidewalks, drive-ways, curbs, etc., by the delivery of this material, and that you also agree to help him remove mud from the wheels of his vehicle so that he will not litter the public street. Further, as additional consideration, the undersigned agrees to indemnify and hold harmless the driver of this truck and this supplier for any and all damage to the premises and/or adjacent property which may be claimed by anyone to have arisen out of delivery of this order.
SIGNED:
X

Excessive Water is Detrimental to Concrete Performance.
H_2O Added by Request / Authorized By:
GAL X
WEIGHMASTER
Thank you for your business

NOTICE: MY SIGNATURE BELOW INDICATES THAT I HAVE READ THE HEALTH WARNING NOTICE AND SUPPLIER WILL NOT BE RESPONSIBLE FOR ANY DAMAGE CAUSED WHEN DELIVERING INSIDE CURB LINE.
LOAD RECEIVED BY
X

QUANTITY	CODE	DESCRIPTION	OUR MIXES ARE DESIGNED TO ACHIEVE SPECIFICATIONS AT A MAX 4" SLUMP	UNIT PRICE	EXTENDED PRICE
10.00CY	CLSLS	CLASS S 4000 PSI			

RETURNED TO PLANT	LEFT JOB	FINISH UNLOADING	ON SITE TESTING		AIR TEMP
			TESTING LAB:		
LEFT PLANT	**ARRIVED JOB**	**START UNLOADING**	**SLUMP**	**CONCRETE TEMP.**	
10:47	11:07				
TOTAL ROUND TRIP	**TOTAL AT JOB**	**UNLOADING TIME**	**AIR**	**CYLINDERS**	

Tax
Prev. AMT
Ticket Tot
Grand Tota

ADDITIONAL CHARGE 1
ADDITIONAL CHARGE 2
GRAND TOTAL

Truck	Driver	User	Disp Ticket Num	Ticket ID	Time	Date
390149	554865	user	6141625	50075	10:28	05/23

B 0042283

Load Size	Mix Code	Returned	Qty	Mix Age	Seq	Load ID
10.00 CYDS	CLSLS				D	29

Material	Design Qty	Required	Batched	% Var	Moisture	Actual Wat
SAND	1223 lb	13086 lb	13000 lb	-0.66%	7.00% M	102 gl
#57STN1"	1380 lb	13904 lb	13920 lb	0.12%	0.75% M	12 gl
GRAVEL3/8"	460 lb	4669 lb	4690 lb	0.45%	1.50% M	8 gl
CEMENT	417.0 lb	4170.0 lb	4174.0 lb	0.10%		
FLYASH	143.0 lb	1430.0 lb	1422.0 lb	-0.56%		
WATER	30.3 gl	159.7 gl	159.6 gl	-0.08%		159.6 gl
AE-90	3.00 oz	30.00 oz	30.00 oz	0.00%		
DZ780	25.00 oz	250.00 oz	250.00 oz	0.00%		

Actual Num Batches: 1 Manual 10:28:59
Load Total: 38556 lb Design W/C: 0.452 Water/Cement: 0.452 T Design Water: 303.0 gl Actual Water: 282.3 gl To Add: 20.7 gl
Slump: 5.00 in Water in Truck: 0.0 gl Adjust Water: 0.0 gl/ Load Trim Water: -2.0 gl/ CYDS

B.3 VEHICLE PROPERTIES AND INFORMATION

Table B.1. Vehicle Properties for Test No. 469468-2-1.

DATE: 2018-06-15 TEST NO.: 469468-2-1

TRACTOR
YEAR: 2007 MAKE: FREIGHTLINER MODEL: CL 120

VIN No.: 1FUJA6CK77LX75964 ODOMETER: 854,542

TRAILER
YEAR: 2002 MAKE: UTILITY MODEL: 53'

VIN No.: 1UYVS25392P787329

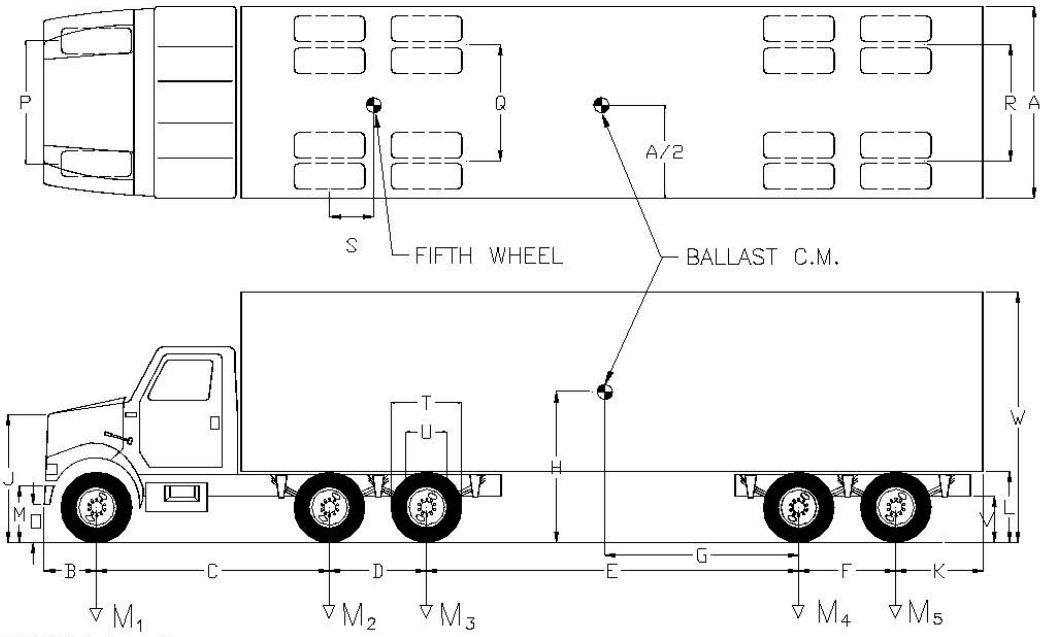

GEOMETRY (inches)

A	84.00	D	50.00	G		K	49.50	O	16.00	R	73.00	U	23.00
B	48.00	E	465.00	H	71.20	L	49.00	P	79.50	S	18.00	V	31.00
C	144.00	F	48.00	J	67.00	M	34.50	Q	73.00	T	41.00	W	148.00

Allowable Range: C = 200 inches max.; L = 52 ±2 inches; Overall Trailer Length = 600 inches max.; Overall Combination Length = 780 inches max.; Trailer Overhang = 87 inches max.; Ballast Center of Mass Ht = 73 ±2 inches above ground;

MASS (lb)	CURB		TEST INERTIAL	
M_1	8710		10040	
M_2	4840		19160.00	
M_3	5700		17880	
M_4	5110		17870	
M_5	4060	Allowable Range	15350	Allowable Range
M_{Total}	28420	29,000 ±3100 lb	80300	79,300 ±1100 lb

Table B2. Accelerometer Locations.

Date: 2018-06-15 Test No.: 469468-2-1 VIN No.: 1FUJA6CK77LX75964

TRACTOR

Year: 2007 Make: Freightliner Model: CL 120

TRAILER

Year: 2003 Make: Utility Model: 53-ft

Height above ground:

A: 33 inches

B: 37 inches

C: 50 inches

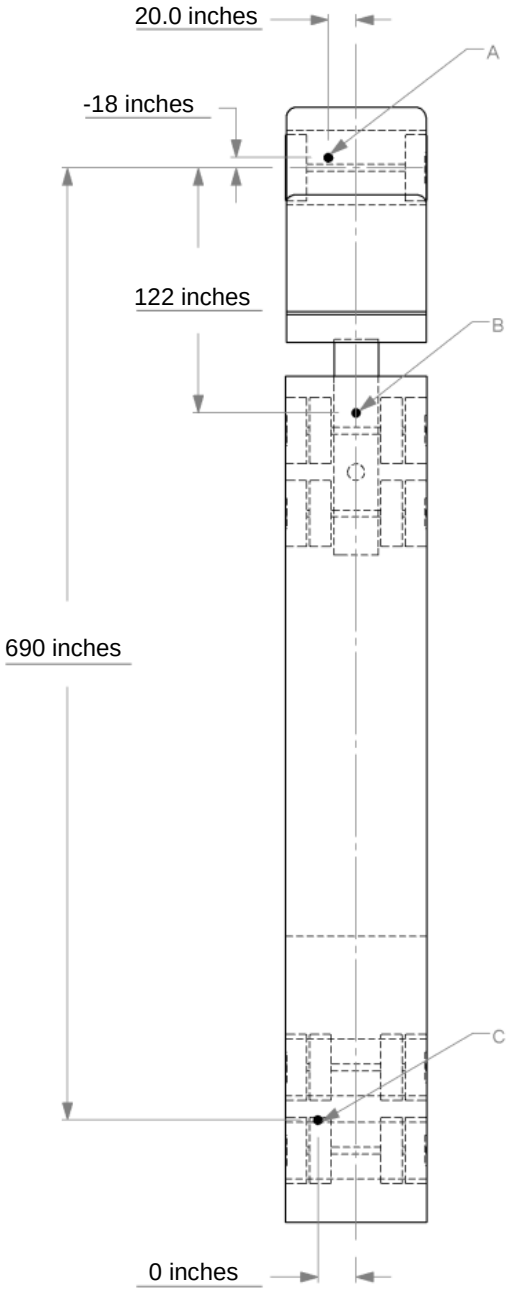

B.4 SEQUENTIAL PHOTOGRAPHS

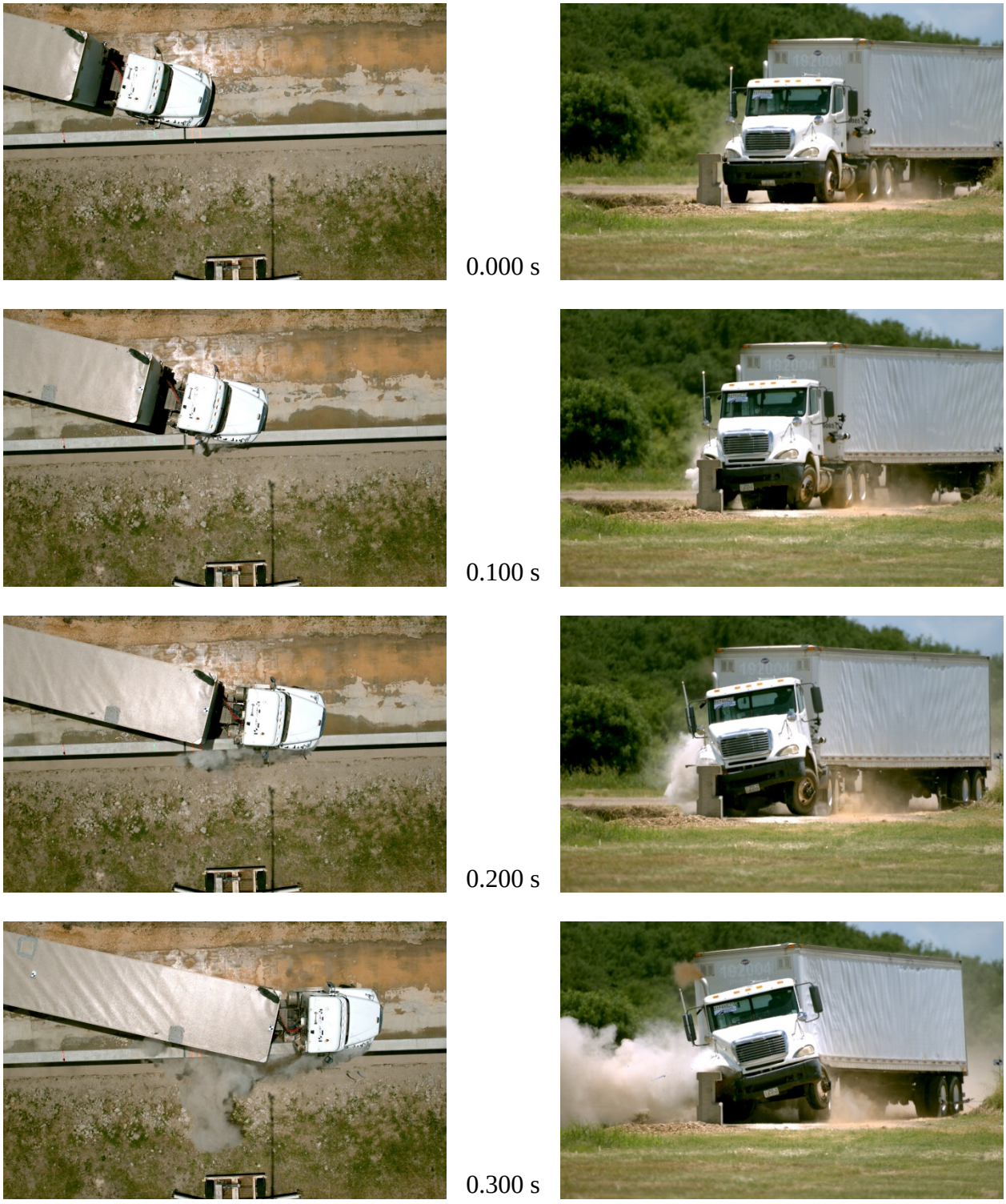

Figure B.1. Sequential Photographs for Test No. 469468-2-1 (Overhead and Frontal Views).




0.400 s




0.500 s




0.750 s




1.000 s

Figure B.1. Sequential Photographs for Test No. 469468-2-1 (Overhead and Frontal Views) (Continued).



0.000 s



0.100 s



0.200 s



0.300 s



0.400 s



0.500 s



0.750 s



1.000 s

Figure B.2. Sequential Photographs for Test No. 469468-2-1 (Rear View).

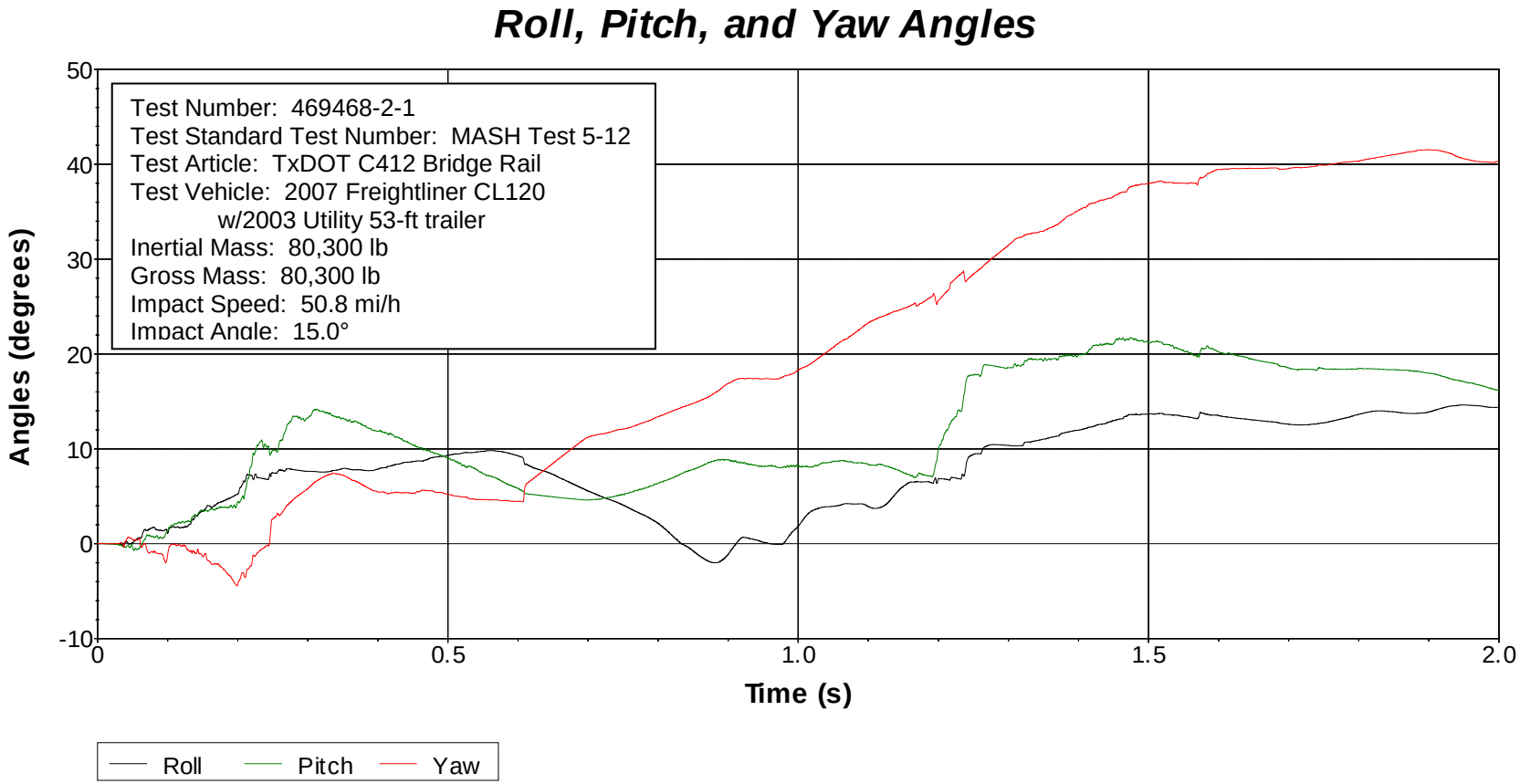

Axes are vehicle-fixed.
Sequence for determining orientation:

1. Yaw.
2. Pitch.
3. Roll.

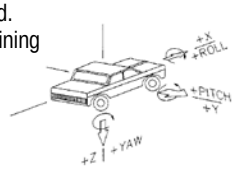

Figure B.3. Vehicle Angular Displacements for Test No. 469468-2-1.

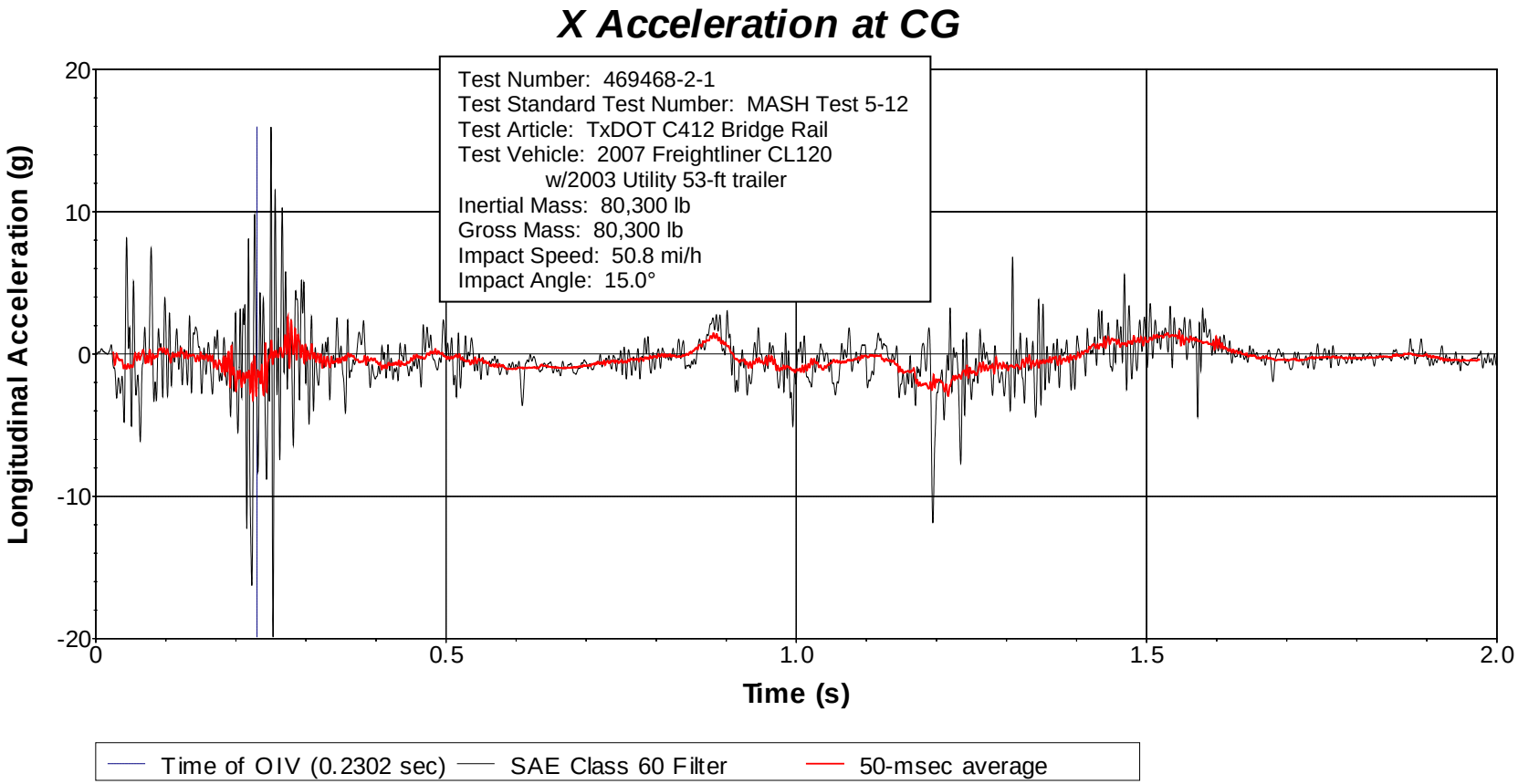

Figure B.4. Vehicle Longitudinal Accelerometer Trace for Test No. 469468-2-1 (Accelerometer Located at Center of Gravity).

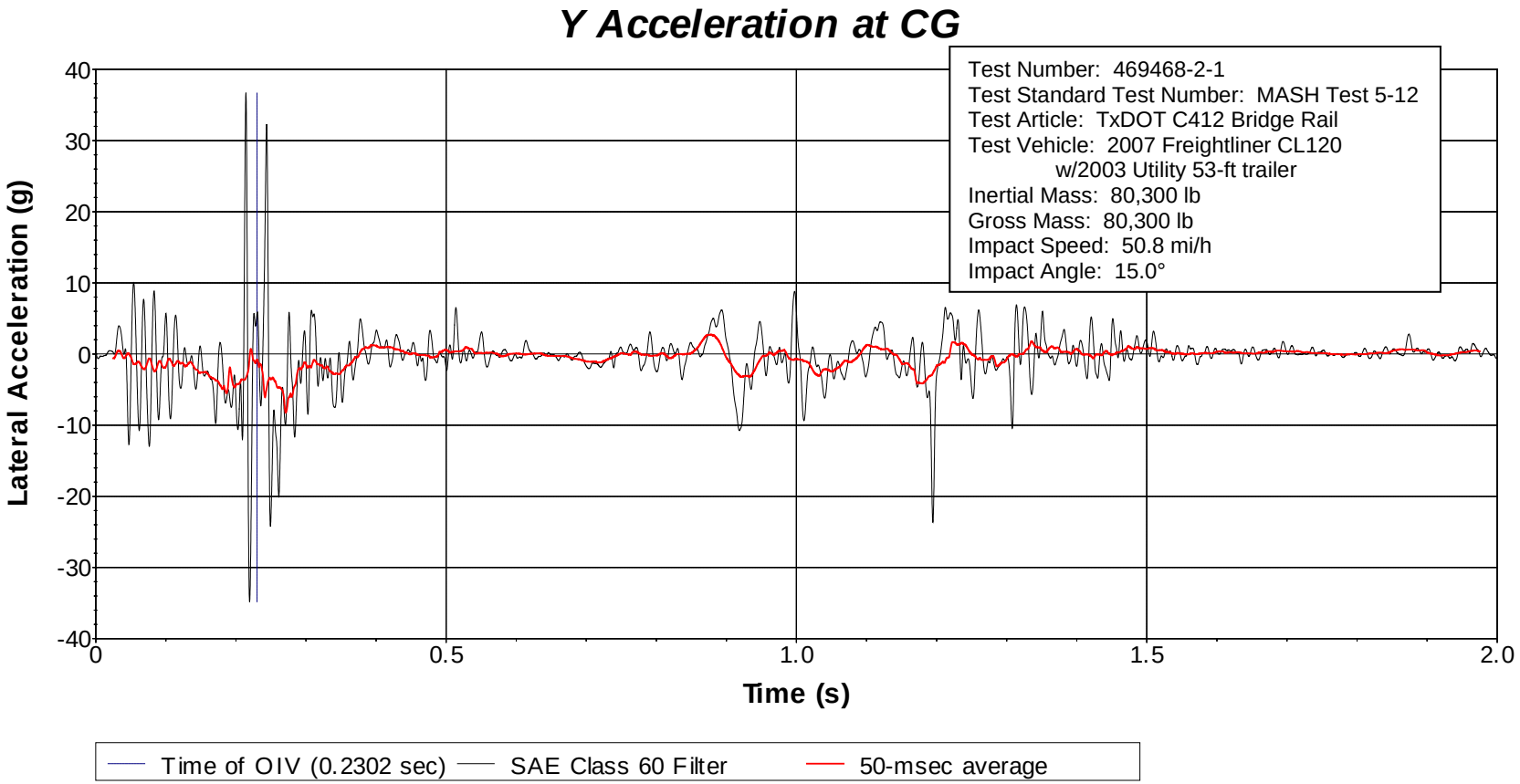

Figure B.5. Vehicle Lateral Accelerometer Trace for Test No. 469468-2-1 (Accelerometer Located at Center of Gravity).

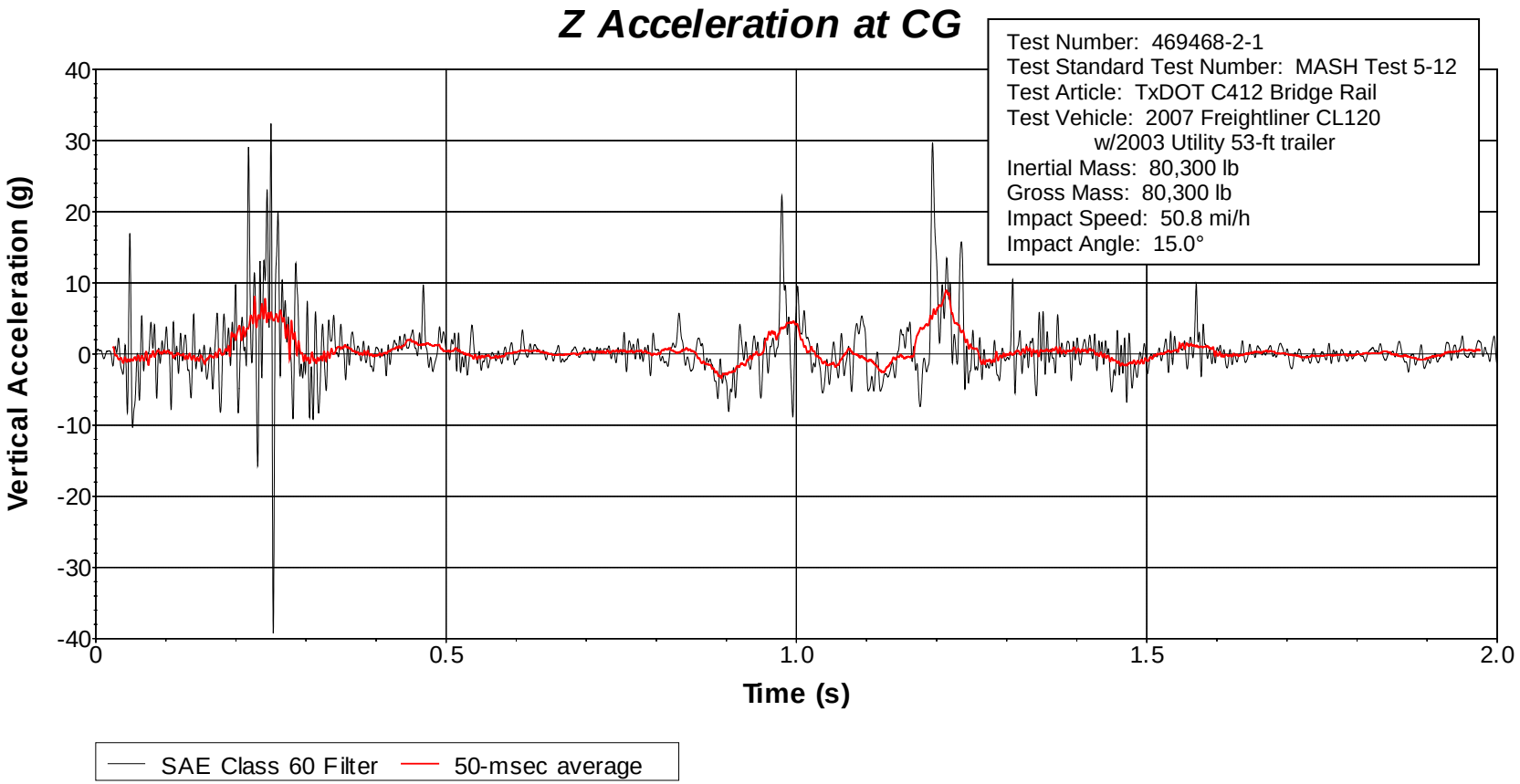

Figure B.6. Vehicle Vertical Accelerometer Trace for Test No. 469468-2-1 (Accelerometer Located at Center of Gravity).

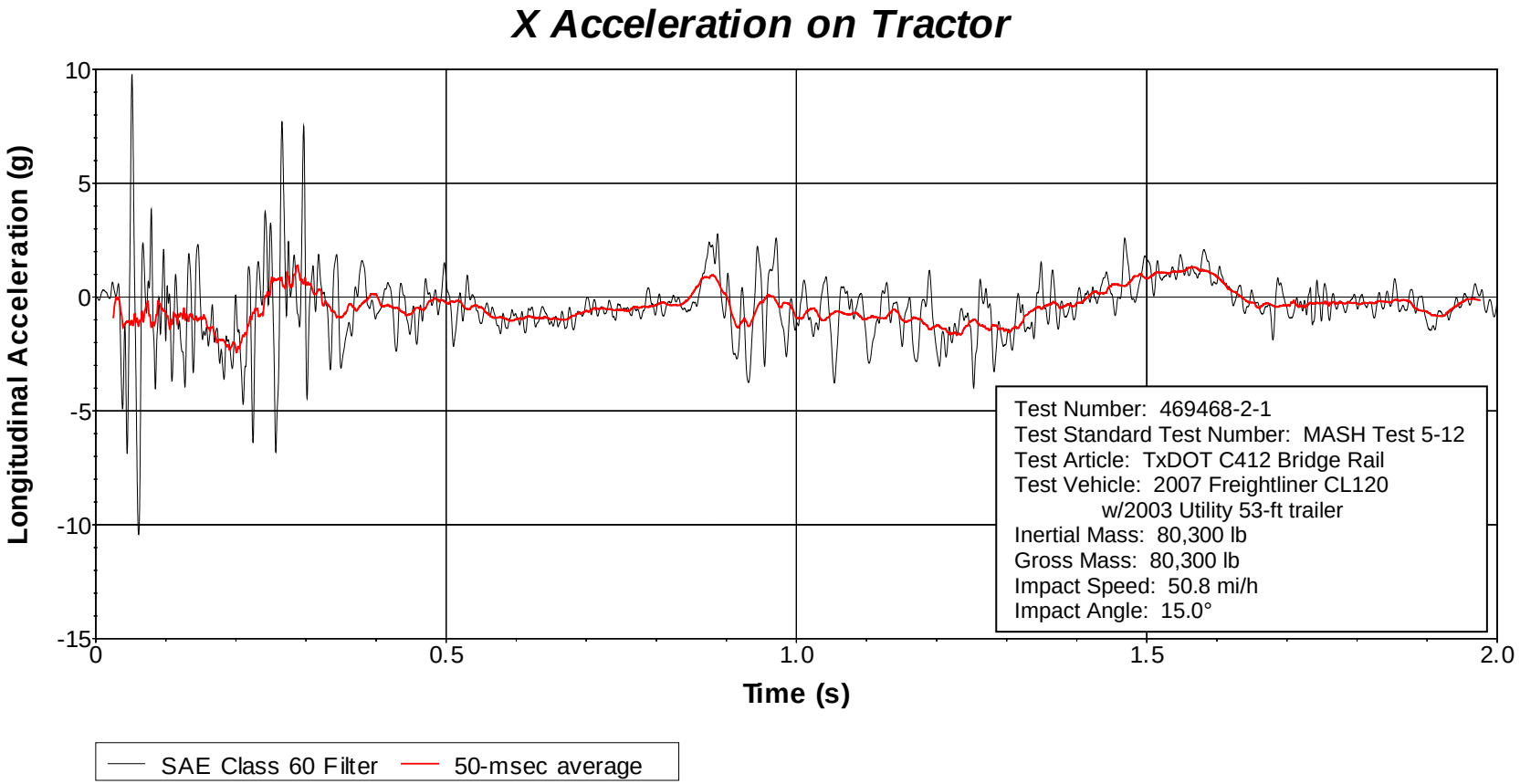

Figure B.7. Vehicle Longitudinal Accelerometer Trace for Test No. 469468-2-1 (Accelerometer Located on Tractor).

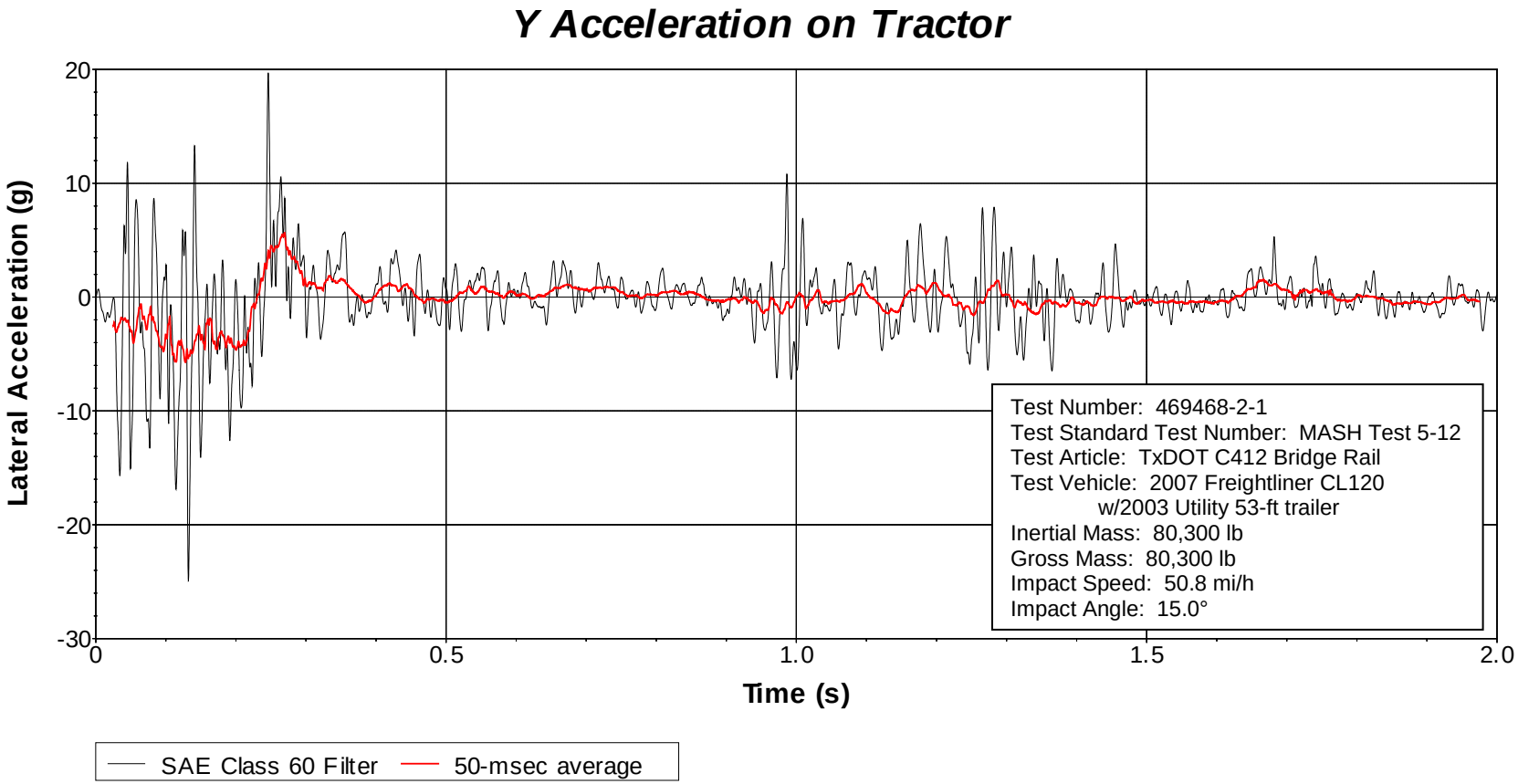

Figure B.8. Vehicle Lateral Accelerometer Trace for Test No. 469468-2-1 (Accelerometer Located on Tractor).

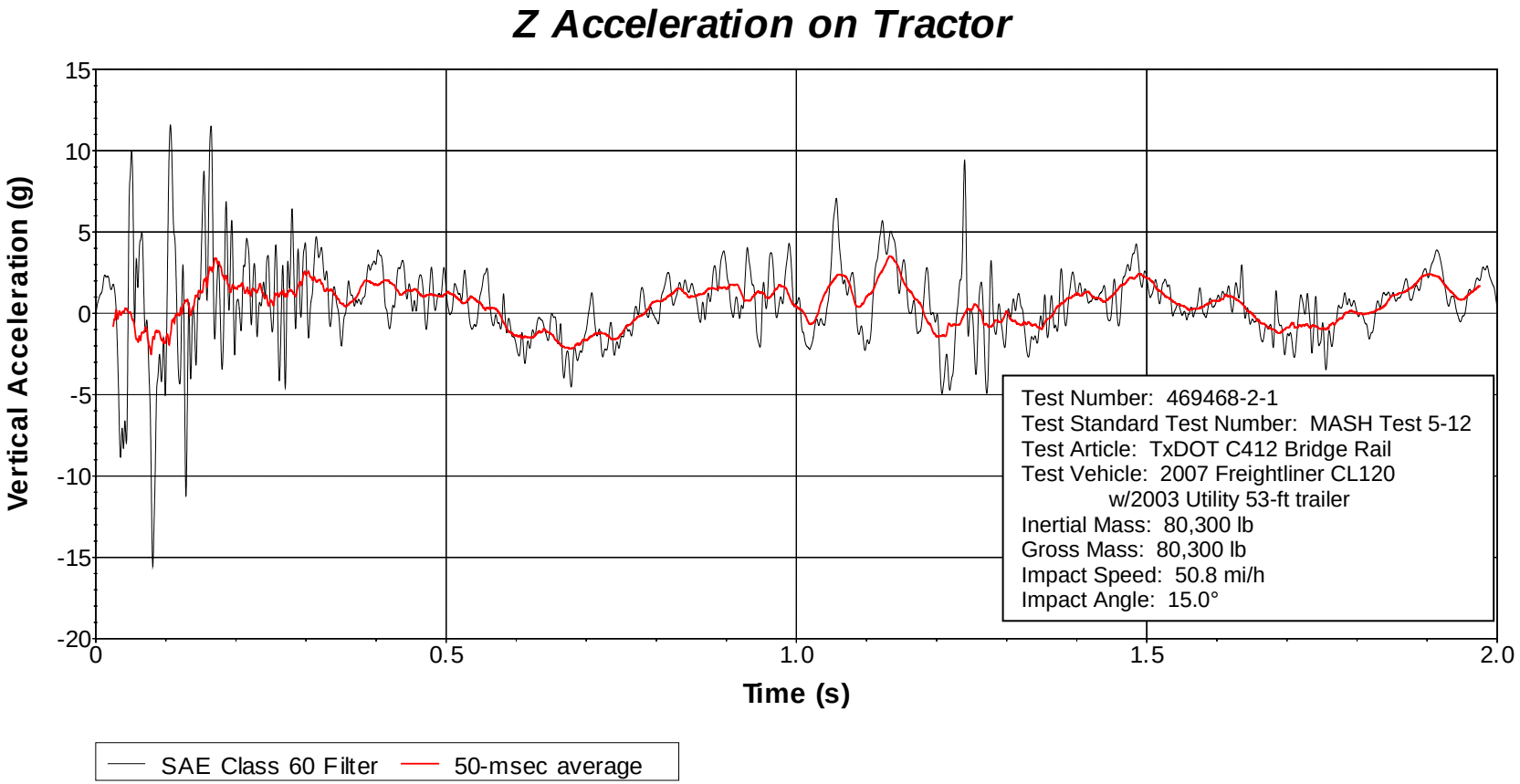

Figure B.9. Vehicle Vertical Accelerometer Trace for Test No. 469468-2-1 (Accelerometer Located on Tractor).

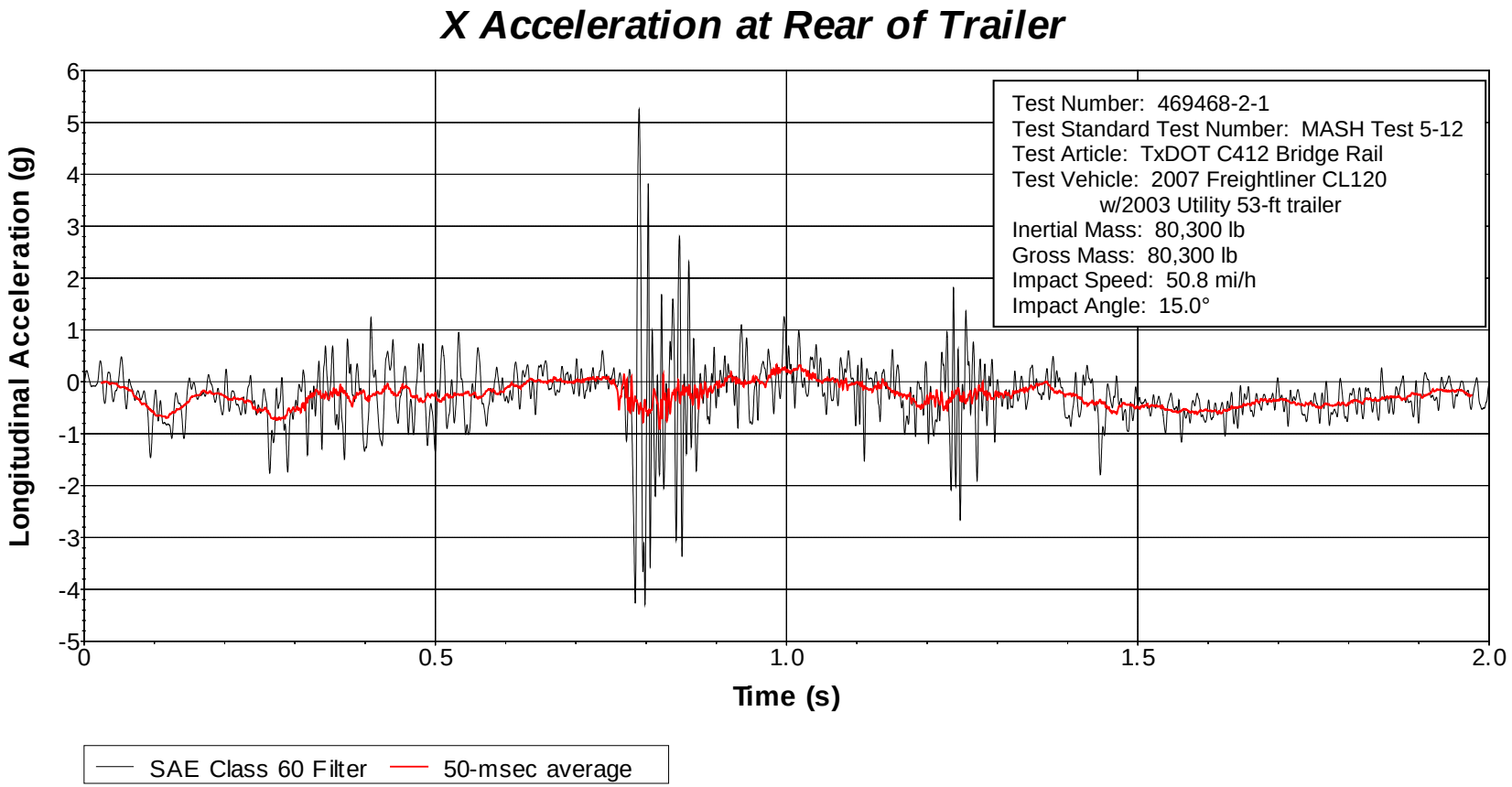

Figure B.10. Vehicle Longitudinal Accelerometer Trace for Test No. 469468-2-1 (Accelerometer Located at Rear of Trailer).

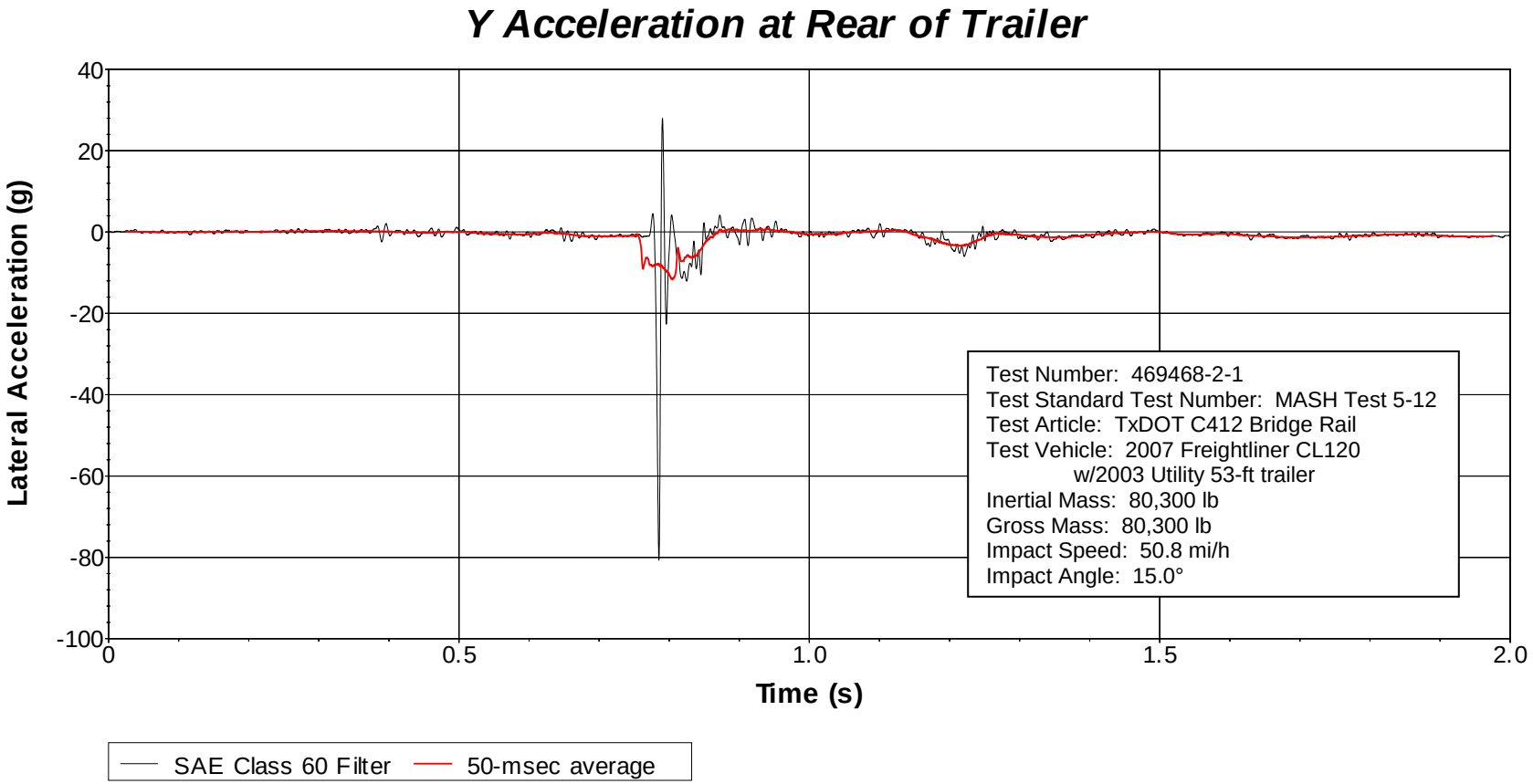

Figure B.11. Vehicle Lateral Accelerometer Trace for Test No. 469468-2-1 (Accelerometer Located at Rear of Trailer).

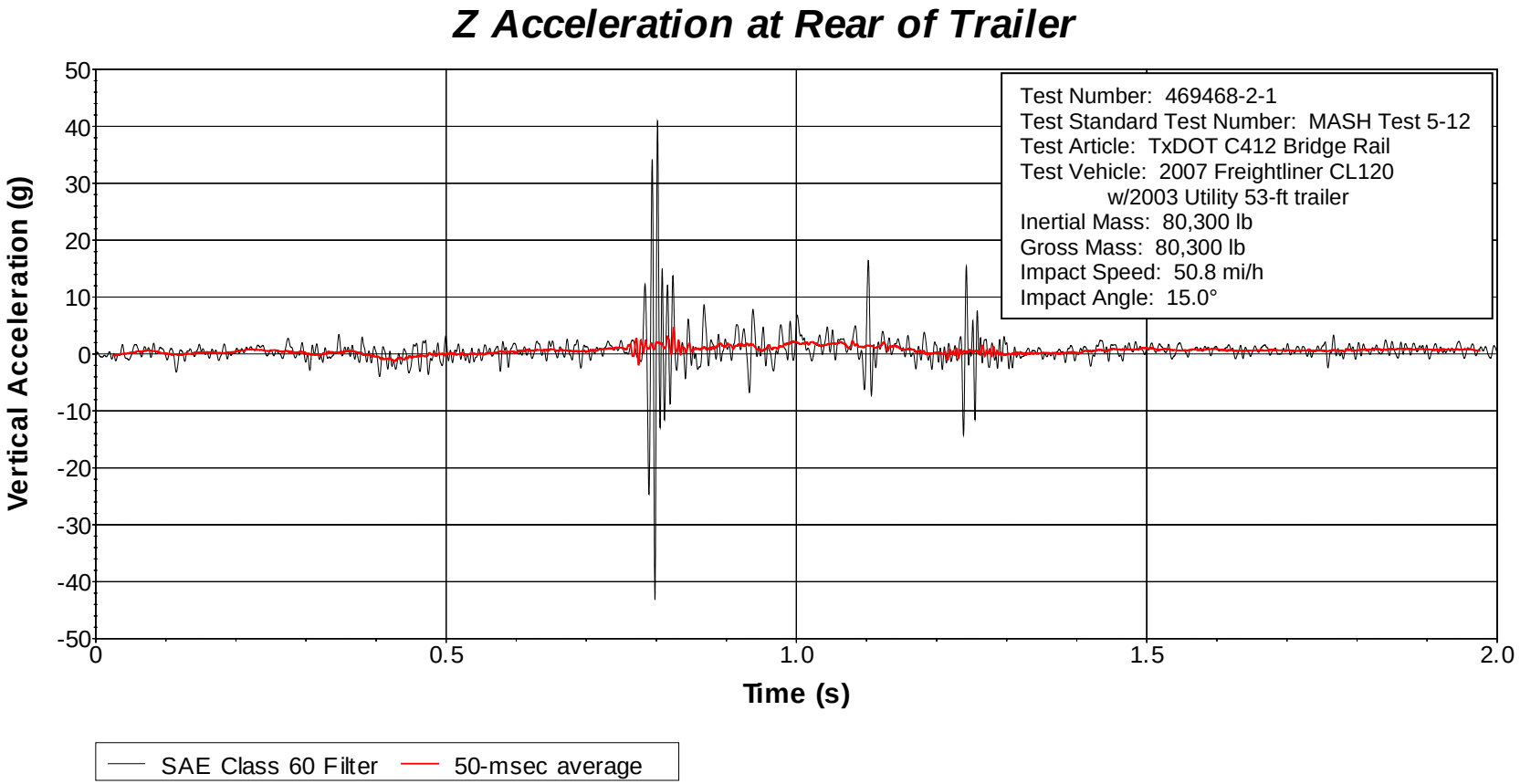

Figure B.12. Vehicle Vertical Accelerometer Trace for Test No. 469468-2-1 (Accelerometer Located at Rear of Trailer).

APPENDIX C. TXDOT C411 BRIDGE RAIL

C.1 DETAILS OF TXDOT C411 BRIDGE RAIL

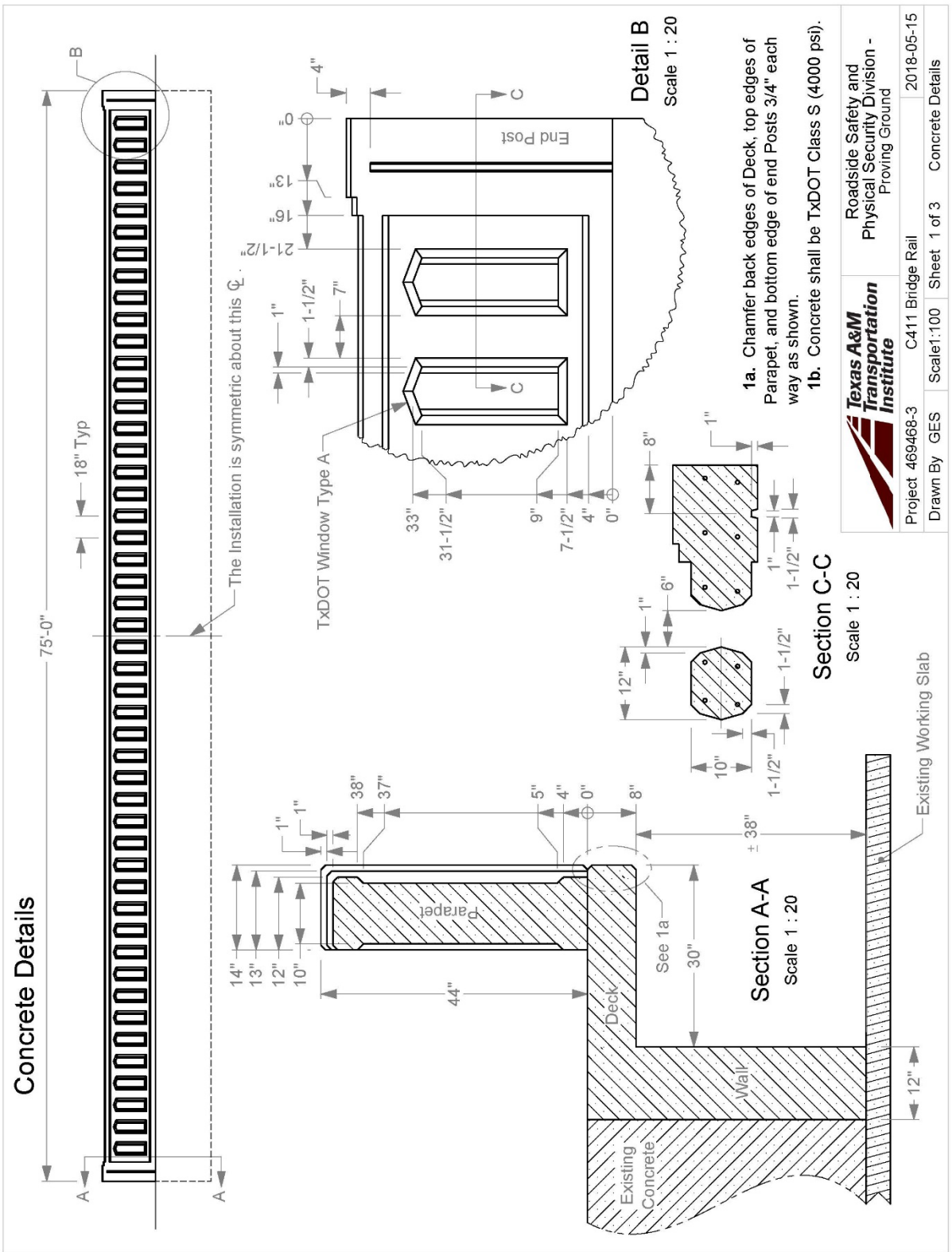

Rebar Details

Section D-D

Scale 1 : 15

Detail E

Scale 1 : 20

Section F-F

Scale 1 : 20

2a. Secure each Tie Bar to existing rebar protruding from the runway (not shown here) with a 3" long weld. Maximum spacing is 18".

2b. All rebar is grade 60. Minimum rebar lap is 19" for #4 bars, 24" for #5 bars, and 35" for #7 bars.

2c. Rebar dimensions are to the center of the bar, unless otherwise indicated by "cvr" (cover).

Texas A&M Transportation Institute	Roadside Safety and Physical Security Division - Proving Ground		
Project 469468-3	C411 Bridge Rail		2018-05-15
Drawn By GES	Scale1:200	Sheet 2 of 3	Rebar Details

T:\1-ProjectFiles\469468 - TxDOT - Bligh\3 C411 Bridge Rail\Drafting, C411\469468-3 Drawing

Texas A&M Transportation Institute

Roadside Safety and Physical Security Division - Proving Ground

Project 469468-3	C411 Bridge Rail		2018-05-15
Drawn By GES	Scale 1:10	Sheet 3 of 3	Rebar

T:\1-ProjectFiles\469468 - TxDOT - Bligh\-3 C411 Bridge Rail\Drafting, C411\469468-3 Drawing

C.2 SUPPORTING CERTIFICATION DOCUMENTS

CMC

STRAIGHT BILL OF LADING-SHORT FORM
ORIGINAL-NON NEGOTIABLE

72421556-01

SHIPMENT NO.(BOL) : 72421556	CARRIER'S NAME: Imber Ventura	SEAL NUMBER :
DATE AND TIME : 04/02/2018 12:53:46	TRUCK/UNIT No:	TRAILER/RAILCAR No: 553015
SHIP FROM :	CMC INCO TERMS: CPT Bryan	SOLD TO: 3007327
CMC Sterling Steel Truck	SHIP TO: 3101939	Ellis Mc Ginnis Construction
2001 Brittmoore Road	Tx A & M University Transporation	2895 Eddy Gatesville Pkwy
Houston, TX 77043-2208	3100 State Hwy 47, Bldg. 7091	Eddy, TX 76524-3911
USA	Bryan, TX 77807-0000 USA	USA
Contact Phone No. :713-690-0347	Contact Phone No. :(254)859-5494	Contact Phone No. :2548595494
Fax No. :	Fax No. :(254)859-5497	Fax No. :2548595497

Subject to Section 7: Subject to Section 7 of Conditions of applicable bill of lading. If this shipment is to be delivered to the consignee without recourse on the consignor, the consignor shall sign the following statement. The carrier shall not make delivery of this shipment without payment of freight and all other lawful charges.

Consignor's Signature : _____

BOL INSTRUCTIONS:

NOTES/SPECIAL INSTRUCTIONS:
Additional Instructions :

Jim (254)227-2815 1st Stop

Material Details

Delivery	Cust PO	Ctrl Cd	Rel No.	Release Description	Dwg #	Material Description	PCS	Weight LB
PROJECT: R/1823300796 UP								
3137044	2802	0NKQ	1	C402 BRIDGE RAIL		Rebar Black 60/420		4,230
3137048	2802	0NKR	2	C411 BRIDGE RAIL		Rebar Black 60/420		3,931
3137050	2802	0NKW	3	C412 BRIDGE RAIL		Rebar Black 60/420		8,533
						Total Weight		16,694

MTR'S INCLUDED

95 Miles

RECEIVED, subject to the classifications in effect on the date of the issue of the Bill of Lading, the property described above, in apparent good order, except as noted (contents of packages unknown), marked, consigned, and destined as indicated below, which said carrier (the word carrier being understood throughout this contract as meaning any person or corporation in possession of the property under the contract) agrees to carry to its usual place of delivery at said destination, if on its route, otherwise to deliver to another carrier on the route to said destination. It is mutually agreed, as to each carrier of all or any said property over all or any portion of said route to destination, and as to each party at any time interested in all or any of said property, that every service to be performed hereunder shall be subject to all the terms and conditions of the Uniform Domestic Straight Bill of Lading set forth (1) in Official, Southern, Western and Illinois Freight Classifications in effect on the date hereof, if this is a rail or a rail-water shipment, or (2) in the applicable motor carrier classification or tariff if this is a motor carrier shipment. Shipper hereby certifies that he is familiar with all the terms and conditions of the said bill of lading, including those on the back thereof, set forth in the classification or tariff which governs the transportation of this shipment and the said terms and conditions are hereby agreed to by the shipper and accepted for himself and his assigns. This is to certify that the above articles are properly described by name and are packed and marked and are in proper condition for transportation according to regulations by the Interstate Commerce Commission. * If the shipment moves between two ports by a carrier by water, the law requires that the bill of lading shall state whether it is carrier's or shipper's weight. ** Shipper's imprints in lieu of stamp, not a part of Bill of Lading approved by the Interstate Commerce Commission. NOTE: Where the rate is dependent on value, shippers are required to state specifically in writing the agreed or declared value of property. The agreed or declared value of the property is hereby specifically stated by the shipper to be not exceeding

DRIVER'S SIGNATURE/AGENT : Ventura

NOTICE TO RECEIVERS :Please check each item on this shipping bill carefully. CMC will not be responsible for any exceptions to goods unless notified within twenty four hours and noted on this document.

RECEIVED BY : _____ DATE: _____ TIME: _____

DELIVERED BY: Imber Ventura DATE: 4-3-18 TIME IN: _____ TIME OUT _____

Page 1 of 2

469468

STRAIGHT BILL OF LADING-SHORT FORM
ORIGINAL-NON NEGOTIABLE

CMC

72421556-01

SHIPMENT NO.(BOL) : 72421556 DATE AND TIME : 04/02/2018 12:53:46 SHIP FROM : CMC Sterling Steel Truck 2001 Brittmoore Road Houston, TX 77043-2208 USA Contact Phone No. :713-690-0347 Fax No. :	CARRIER'S NAME: Imber Ventura TRUCK/UNIT No: CMC INCO TERMS: CPT Bryan SHIP TO: 3101939 Tx A & M University Transporation 3100 State Hwy 47, Bldg. 7091 Bryan, TX 77807-0000 USA Contact Phone No. :(254)859-5494 Fax No. :(254)859-5497	SEAL NUMBER : TRAILER/RAILCAR No: SOLD TO: 3007327 Ellis Mc Ginnis Construction 2895 Eddy Gatesville Pkwy Eddy, TX 76524-3911 USA Contact Phone No. :2548595494 Fax No. :2548595497

Subject to Section 7: Subject to Section 7 of Conditions of applicable bill of lading, if this shipment is to be delivered to the consignee without recourse on the consignor, the consignor shall sign the following statement. The carrier shall not make delivery of this shipment without payment of freight and all other lawful charges.

Consignor's Signature : _____

BOL INSTRUCTIONS:

NOTES/SPECIAL INSTRUCTIONS:
Additional Instructions :

Material Details

Delivery	Cust PO	Ctrl Cd	Rel No.	Release Description	Dwg #	Material Description	PCS	Weight LB
PROJECT: P/1823300796 UP								
3137044	2802	0NKQ	1	C402 BRIDGE RAIL		Rebar Black 60/420		4,230
3137048	2802	0NKR	2	C411 BRIDGE RAIL		Rebar Black 60/420		3,931
3137050	2802	0NKW	3	C412 BRIDGE RAIL		Rebar Black 60/420		8,533
						Total Weight		16,694

MTR'S INCLUDED

RECEIVED, subject to the classifications in effect on the date of the issue of the Bill of Lading, the property described above, in apparent good order, except as noted (contents of packages unknown), marked, consigned, and destined as indicated below, which said carrier (the word carrier being understood throughout this contract as meaning any person or corporation in possession of the property under the contract) agrees to carry to its usual place of delivery at said destination. If on its route, otherwise to deliver to another carrier on the route to said destination. It is mutually agreed, as to each carrier of all or any said property over all or any said property over all or any portion of said route to destination, and as to each party at any time interested in all or any of said property, that every service to be performed hereunder shall be subject to all the terms and conditions of the Uniform Domestic Straight Bill of Lading set forth (1) in Official, Southern, Western and Illinois Freight Classifications in effect on the date hereof, if this is a rail or a rail-water shipment, or (2) in the applicable motor carrier classification or tariff if this is a motor carrier shipment. Shipper hereby certifies that he is familiar with all the terms and conditions of the said bill of lading, including those on the back thereof, set forth in the classification or tariff which governs the transportation of this shipment and the said terms and conditions are hereby agreed to by the shipper and accepted for himself and his assigns. This is to certify that the above articles are properly describe by name and are packed and marked and are in proper condition for transportation according to regulations by the Interstate Commerce Commission. * If the shipment moves between two ports by a carrier by water, the law requires that the bill of lading shall state whether it is "carrier's or shipper's weight." * Shipper's imprints in lieu of stamp; not a part of Bill of Lading approved by the Interstate Commerce Commission. NOTE: Where the rate is dependent on value, shippers are required to state specifically in writing the agreed or declared value of property. The agreed or declared value of the property is hereby specifically state by the shipper to be not exceeding.

DRIVER'S SIGNATURE/AGENT : _____

NOTICE TO RECEIVERS :Please check each item on this shipping bill carefully. CMC will not be responsible for any exceptions to goods unless notified within twenty four hours and noted on this document.

RECEIVED BY : _____ DATE: _____ TIME: _____

DELIVERED BY: _____ DATE: _____ TIME IN: _____ TIME OUT _____

CMC Sterling Steel
2001 Britmoore
Houston, TX 77043-
Phone: (713) 690-0347 FAX: (713) 690-5758

JOB NUMBER	RELEASE NUMBER	REQ. DELIVERY DATE	PAGE
1823300796	1		1 of 1

JOB NAME: TX A&M UNIV TRANSP INSTITUT(DW — CS: 0NKQ
CUSTOMER: ELLIS-MCGINNIS CONSTRUCTION CO. — BY: GL

MATERIAL TYPE: Rebar, Grade 60, Black — REFERENCE — DRAWING ID — DESCRIPTION: C402 BRIDGE RAIL

Itm	Qty	Size	Length	Mark	Shape	Lbs	A	B	C	D	E	F/R	G	H	J	K	O	BC
1	310	5	6-02	TL	17	1995		3-01	3-01									AC03
2	120	5	2-07	TB	17	323		0-07	2-00									AC03
	430.					2318.												
3	105	4	5-02	BL	17	363		2-07	2-07									AC02
4	58	4	40-00	R4		1550												ST
	163.					1913.												

Total Weight: 4,231 Lbs

Longest Length: 40-00

WEIGHT SUMMARY

	TOTAL			STRAIGHT			LIGHT BENDING			HEAVY BENDING		
SIZE	ITEMS	PIECES	LBS	ITEMS	PIECES	LBS	ITEMS	PIECES	LBS	ITEMS	PIECES	LBS
Rebar, Grade 60, Black												
4	2	163	1,913	1	58	1,550	0	0	0	1	105	363
5	2	430	2,318	0	0	0	0	0	0	2	430	2,318
	4	593	4,231	1	58	1,550	0	0	0	3	535	2,681

Total Weight: 4,231 Lbs

Longest Length: 40-00

v15.02.080 (T) (HOW) ©2018 aSa UNAUTHORIZED REPRODUCTION PROHIBITED Monday, March 26, 2018 3:01 PM

CMC Sterling Steel
2001 Britmoore
Houston, TX 77043-
Phone: (713) 690-0347 FAX: (713) 690-5758

JOB NUMBER	RELEASE NUMBER	REQ. DELIVERY DATE	PAGE
1823300796	2		1 of 1

JOB NAME	CS
TX A&M UNIV TRANSP INSTITUT(DW	0NKR

CUSTOMER	BY
ELLIS-MCGINNIS CONSTRUCTION CO.	GL

MATERIAL TYPE	REFERENCE	DRAWING ID	DESCRIPTION
Rebar, Grade 60, Black			C411 BRIDGE RAIL

Itm	Qty	Size	Length	Mark	Shape	Lbs	A	B	C	D	E	F/R	G	H	J	K	O	BC
1	4	7	40-00	R7		327												ST
	4.					327.												
2	105	5	8-08	S	T2	949	0-06	0-06	3-04	0-06	3-04		0-06					AC14
3	155	5	6-02	TL	17	997		3-01	3-01									AC03
4	105	5	3-05	U	18	375	1-051	1-021	0-10						0-06			AC03
5	60	5	2-07	TB	17	161		0-07	2-00									AC03
6	4	5	40-00	R5		167												ST
	429.					2649.												
7	60	4	5-02	BL	17	207		2-07	2-07									AC02
8	28	4	40-00	R4		748												ST
	88.					955.												

Total Weight: 3,931 Lbs

Longest Length: 40-00

WEIGHT SUMMARY

	TOTAL			STRAIGHT			LIGHT BENDING			HEAVY BENDING		
SIZE	ITEMS	PIECES	LBS	ITEMS	PIECES	LBS	ITEMS	PIECES	LBS	ITEMS	PIECES	LBS
Rebar, Grade 60, Black												
4	2	88	955	1	28	748	0	0	0	1	60	207
5	5	429	2,649	1	4	167	1	105	949	3	320	1,533
7	1	4	327	1	4	327	0	0	0	0	0	0
	8	521	3,931	3	36	1,242	1	105	949	4	380	1,740

Total Weight: 3,931 Lbs

Longest Length: 40-00

v16.02.080 (T) (HOW) ©2018 aSa UNAUTHORIZED REPRODUCTION PROHIBITED Monday, March 26, 2018 3:01 PM

CMC Sterling Steel
2001 Britmoore
Houston, TX 77043-
Phone: (713) 690-0347 FAX: (713) 690-5758

JOB NUMBER	RELEASE NUMBER	REQ. DELIVERY DATE	PAGE
1823300796	3		1 of 1

JOB NAME	CC
TX A&M UNIV TRANSP INSTITUT(DW	0NKW

CUSTOMER	BY
ELLIS-MCGINNIS CONSTRUCTION CO.	GL

MATERIAL TYPE	REFERENCE	DRAWING ID	DESCRIPTION
Rebar, Grade 60, Black			C412 BRIDGE RAIL

Itm	Qty	Size	Length	Mark	Shape	Lbs	A	B	C	D	E	F/R	G	H	J	K	O	BC
1	3	8	5-00	R3		40												0
	3.					40.												
2	170	6	6-11	U	S11	1767		6-112						3-042			0-063	TB
	170.					1767.												
3	340	5	7-01	TL-5	17	2511		4-00	3-012									AC03
4	85	5	6-03	BL	17	554		3-042	2-102									AC03
5	95	5	2-08	TB	17	265		0-07	2-01									AC03
6	40	5	2-07	UB	S11	108		2-07						1-03			0-033	AC
7	12	5	40-00	R5		501												ST
	572.					3939.												
8	160	4	7-01	TL-4	17	757		4-00	3-012									AC02
9	70	4	40-00	R4		1870												ST
	230.					2627.												
10	170	3	2-06	P	S11	160		2-06						1-022			0-023	AC
	170.					160.												

Total Weight: 8,533 Lbs

Longest Length: 40-00

WEIGHT SUMMARY

	TOTAL			STRAIGHT			LIGHT BENDING			HEAVY BENDING		
SIZE	ITEMS	PIECES	LBS	ITEMS	PIECES	LBS	ITEMS	PIECES	LBS	ITEMS	PIECES	LBS
Rebar, Grade 60, Black												
3	1	170	160	0	0	0	1	170	160	0	0	0
4	2	230	2,627	1	70	1,870	0	0	0	1	160	757
5	5	572	3,939	1	12	501	1	40	108	3	520	3,330
6	1	170	1,767	0	0	0	1	170	1,767	0	0	0
8	1	3	40	1	3	40	0	0	0	0	0	0
	10	1145	8,533	3	85	2,411	3	380	2,035	4	680	4,087

Total Weight: 8,533 Lbs

Longest Length: 40-00

v16.02.080 (T) (HOW) ©2018 aSa UNAUTHORIZED REPRODUCTION PROHIBITED Monday, March 26, 2018 3:02 PM

MATERIAL TEST REPORT

Date Printed: 03/14/2018

Mid American Steel & Wire

Bill to:
CMC REBAR
P O BOX 139094
DALLAS, TX 75313

Ship to:
CMC REBAR
2001 BRITTMOORE
HOUSTON, TX 77043

Customer No: 000000006015
PO Number: 4501198093
Ship Date: 03/14/2018
Order Number: 91943
Load Number: 116288

Item Number	Description
3REBAR	#3 GRADE 60 COILED REBAR

CHEMICAL ANALYSIS

Heat Number	C	Mn	P	S	Si	Cu	Ni	Cr	Mo	Sn	V	Al	N	Nb
3076185	0.3700	0.8000	0.0120	0.0320	0.2100	0.2800	0.2200	0.2100	0.0910	0.0130	0.0200	0.0010	0.0000	0.0000

MECHANICAL PROPERTIES

Heat Number	Yield (Psi/Mpa)	Tensile (Psi/Mpa)	Elongation (% 8" guage)	Bend Test Pass/Fail
3076185	76007 psi / 524 Mpa	111338 psi / 768 Mpa	12.50	Pass

I hereby certify that the above test results are correct as contained in the records of the company. All Manufacturing processes of the steel materials in this product, including melting have occurred in the United States. The material was produced and tested according to ASTM A615/A615M-065.

Quality Assurance: _____

MATERIAL TEST REPORT

Date Printed: 03/29/2018

Mid American Steel & Wire
Mead, Oklahoma

Bill to:
CMC REBAR
P O BOX 139094
DALLAS, TX 75313

Ship to:
CMC REBAR
2001 BRITTMOORE
HOUSTON, TX 77043

Customer No: 000000006015
PO Number: 4501201423
Ship Date: 03/29/2018
Order Number: 92181
Load Number: 116521

Item Number	Description
4REBAR	# 4 GRADE 60 COILED REBAR

CHEMICAL ANALYSIS

Heat Number	C	Mn	P	S	Si	Cu	Ni	Cr	Mo	Sn	V	Al	N	Nb
1820636	0.4400	0.9100	0.0160	0.0240	0.2400	0.2300	0.1700	0.2400	0.0600	0.0110	0.0020	0.0040	0.0077	0.0003

MECHANICAL PROPERTIES

Heat Number	Yield (Psi/Mpa)	Tensile (Psi/Mpa)	Elongation (% 8" guage)	Bend Test Pass/Fail
1820636	66470 psi / 458 Mpa	114647 psi / 791 Mpa	10.00	Pass

I hereby certify that the above test results are correct as contained in the records of the company. All Manufacturing processes of the steel materials in this product, including melting have occurred in the United States. The material was produced and tested according to ASTM A615/A615M-065.

Quality Assurance: _____

CMC STEEL TEXAS
1 STEEL MILL DRIVE
SEGUIN TX 78155-7510

CERTIFIED MILL TEST REPORT

For additional copies call
830-372-8771

We hereby certify that the test results presented here are accurate and conform to the reported grade specification

TOMMY HEWITT
Quality Assurance Manager

HEAT NO.:3078175
SECTION: REBAR 13MM (#4) 40'0" 420/60
GRADE: ASTM A615-16 Gr 420/60
ROLL DATE: 03/03/2018
MELT DATE: 02/27/2018
Cert. No.: 02/27/2018 / 078175A371

SOLD TO

SHIP TO

Delivery#:
BOL#:
CUST PO#:
CUST P/N:
DLVRY LBS / HEAT:
DLVRY PCS / HEAT:

Characteristic	Value	Characteristic	Value	Characteristic	Value
C	0.43%				
Mn	0.73%				
P	0.009%				
S	0.046%				
Si	0.19%				
Cu	0.33%				
Cr	0.10%				
Ni	0.21%				
Mo	0.079%				
V	0.000%				
Cb	0.002%				
Sn	0.014%				
Al	0.001%				
Yield Strength test 1	62.0ksi				
Tensile Strength test 1	99.2ksi				
Elongation test 1	17%				
Elongation Gage Lgth test 1	8IN				
Bend Test Diameter	1.750IN				
Bend Test 1	Passed				

The Following is true of the material represented by this MTR:

"Material is fully killed
"100% melted and rolled in the USA
"EN10204:2004 3.1 compliant
"Contains no weld repair
"Contains no Mercury contamination
"Manufactured in accordance with the latest version of the plant quality manual
"Meets the "Buy America" requirements of 23 CFR635.410

REMARKS :

04/02/2018 20:57:52
Page 1 OF 1

MATERIAL TEST REPORT

PAGE 1

Date Printed: 03/28/2018

Mid American Steel & Wire

Bill to:
CMC REBAR
P O BOX 139094
DALLAS, TX 75313

Ship to:
CMC REBAR
2001 BRITTMOORE
HOUSTON, TX 77043

Customer No: 000000006015
PO Number: 4501201440
Ship Date: 03/28/2018
Order Number: 92187
Load Number: 116527

Item Number	Description
5REBAR	# 5 GRADE 60 COILED REBAR

CHEMICAL ANALYSIS

Heat Number	C	Mn	P	S	Si	Cu	Ni	Cr	Mo	Sn	V	Al	N	Nb
1723630	0.4600	0.8700	0.0170	0.0260	0.2000	0.2100	0.1100	0.1900	0.0300	0.0110	0.0030	0.0010	0.0067	0.0005

MECHANICAL PROPERTIES

Heat Number	Yield (Psi/Mpa)	Tensile (Psi/Mpa)	Elongation (% 8" guage)	Bend Test Pass/Fail
1723630	62474 psi / 431 Mpa	108254 psi / 747 Mpa	11.71	Pass

I hereby certify that the above test results are correct as contained in the records of the company. All Manufacturing processes of the steel materials in this product, including melting have occurred in the United States. The material was produced and tested according to ASTM A615/A615M-065.

Quality Assurance: _____

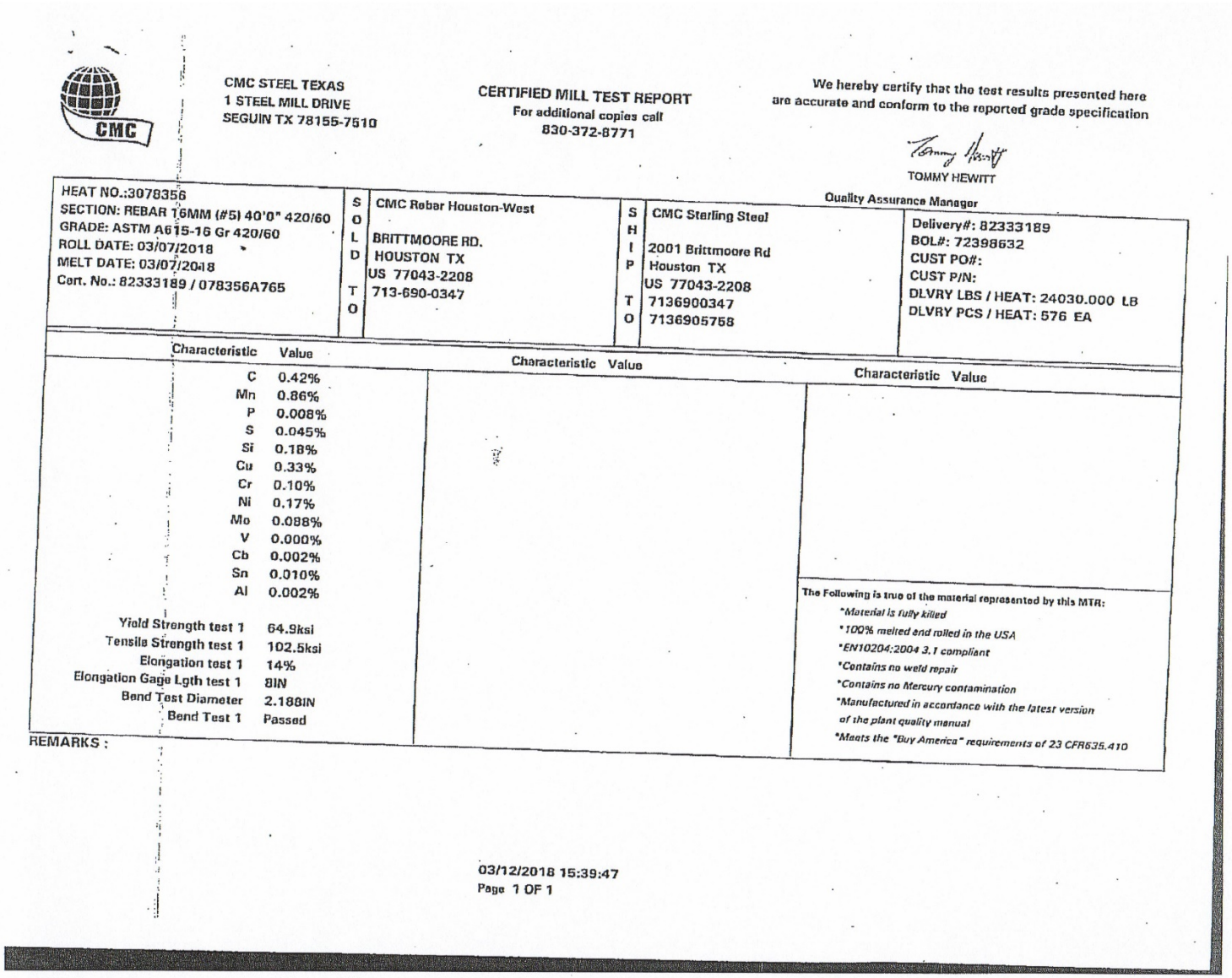

CMC STEEL TEXAS
1 STEEL MILL DRIVE
SEGUIN TX 78155-7510

CERTIFIED MILL TEST REPORT

For additional copies call
830-372-8771

We hereby certify that the test results presented here are accurate and conform to the reported grade specification

TOMMY HEWITT
Quality Assurance Manager

HEAT NO.:3078356
SECTION: REBAR 16MM (#5) 40'0" 420/60
GRADE: ASTM A615-16 Gr 420/60
ROLL DATE: 03/07/2018
MELT DATE: 03/07/2018
Cert. No.: 82333189 / 078356A765

SOLD TO
CMC Rebar Houston-West
BRITTMOORE RD.
HOUSTON TX
US 77043-2208
713-690-0347

SHIP TO
CMC Sterling Steel
2001 Brittmoore Rd
Houston TX
US 77043-2208
7136900347
7136905758

Delivery#: 82333189
BOL#: 72398632
CUST PO#:
CUST P/N:
DLVRY LBS / HEAT: 24030.000 LB
DLVRY PCS / HEAT: 576 EA

Characteristic	Value
C	0.42%
Mn	0.86%
P	0.008%
S	0.045%
Si	0.18%
Cu	0.33%
Cr	0.10%
Ni	0.17%
Mo	0.088%
V	0.000%
Cb	0.002%
Sn	0.010%
Al	0.002%
Yield Strength test 1	64.9ksi
Tensile Strength test 1	102.5ksi
Elongation test 1	14%
Elongation Gage Lgth test 1	8IN
Bend Test Diameter	2.188IN
Bend Test 1	Passed

Characteristic Value

Characteristic Value

The Following is true of the material represented by this MTR:
- *Material is fully killed
- *100% melted and rolled in the USA
- *EN10204:2004 3.1 compliant
- *Contains no weld repair
- *Contains no Mercury contamination
- *Manufactured in accordance with the latest version of the plant quality manual
- *Meets the "Buy America" requirements of 23 CFR635.410

REMARKS :

03/12/2018 15:39:47
Page 1 OF 1

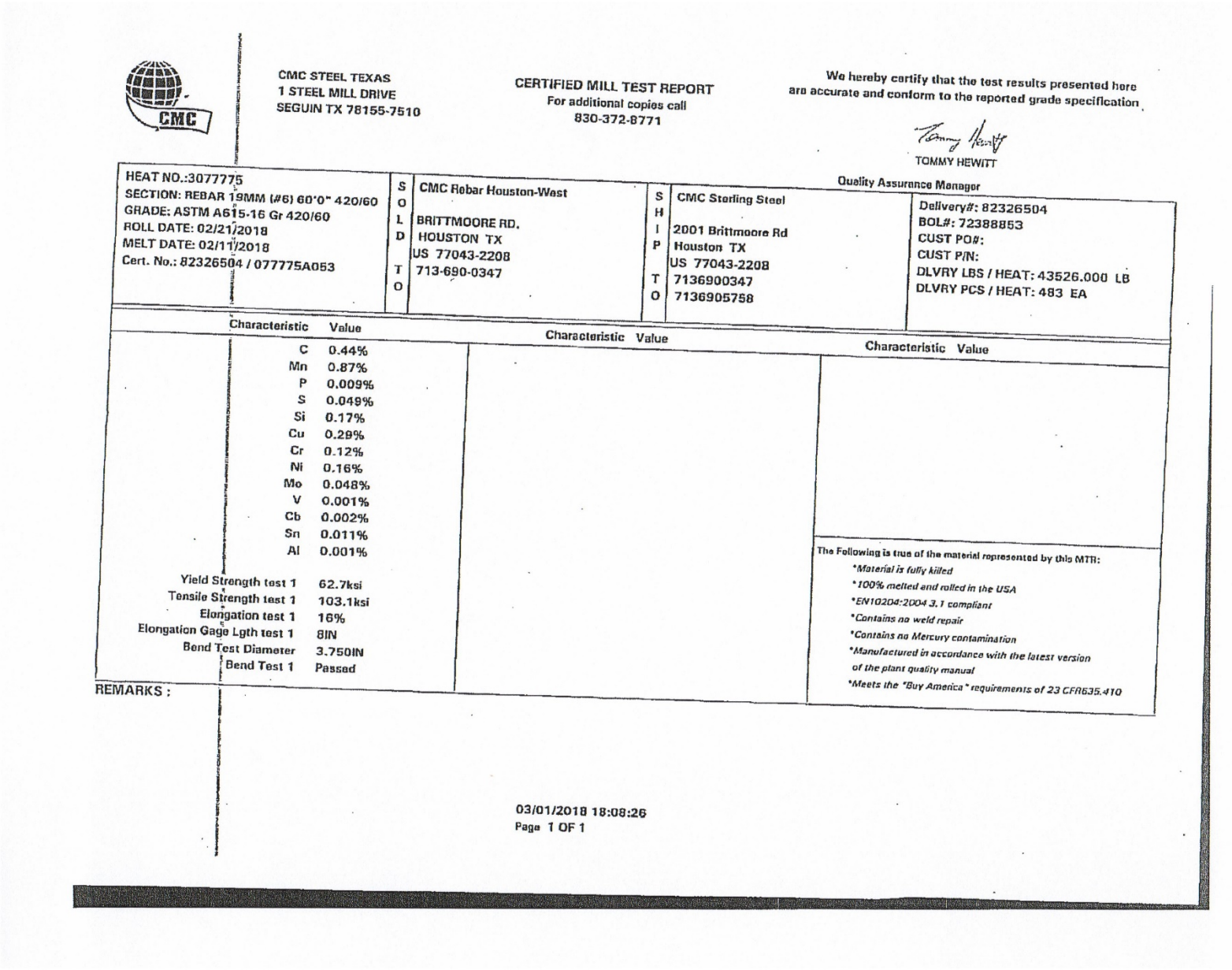

CMC STEEL TEXAS
1 STEEL MILL DRIVE
SEGUIN TX 78155-7510

CERTIFIED MILL TEST REPORT
For additional copies call
830-372-8771

We hereby certify that the test results presented here are accurate and conform to the reported grade specification

TOMMY HEWITT
Quality Assurance Manager

HEAT NO.:3077775
SECTION: REBAR 19MM (#6) 60'0" 420/60
GRADE: ASTM A615-16 Gr 420/60
ROLL DATE: 02/21/2018
MELT DATE: 02/11/2018
Cert. No.: 82326504 / 077775A053

SOLD TO: CMC Rebar Houston-West
BRITTMOORE RD.
HOUSTON TX
US 77043-2208
713-690-0347

SHIP TO: CMC Sterling Steel
2001 Brittmoore Rd
Houston TX
US 77043-2208
7136900347
7136905758

Delivery#: 82326504
BOL#: 72388853
CUST PO#:
CUST P/N:
DLVRY LBS / HEAT: 43526.000 LB
DLVRY PCS / HEAT: 483 EA

Characteristic	Value
C	0.44%
Mn	0.87%
P	0.009%
S	0.049%
Si	0.17%
Cu	0.28%
Cr	0.12%
Ni	0.16%
Mo	0.048%
V	0.001%
Cb	0.002%
Sn	0.011%
Al	0.001%
Yield Strength test 1	62.7ksi
Tensile Strength test 1	103.1ksi
Elongation test 1	16%
Elongation Gage Lgth test 1	8IN
Bend Test Diameter	3.750IN
Bend Test 1	Passed

Characteristic Value

Characteristic Value

The Following is true of the material represented by this MTR:
*Material is fully killed
*100% melted and rolled in the USA
*EN10204:2004 3.1 compliant
*Contains no weld repair
*Contains no Mercury contamination
*Manufactured in accordance with the latest version of the plant quality manual
*Meets the "Buy America" requirements of 23 CFR635.410

REMARKS :

03/01/2018 18:08:26
Page 1 OF 1

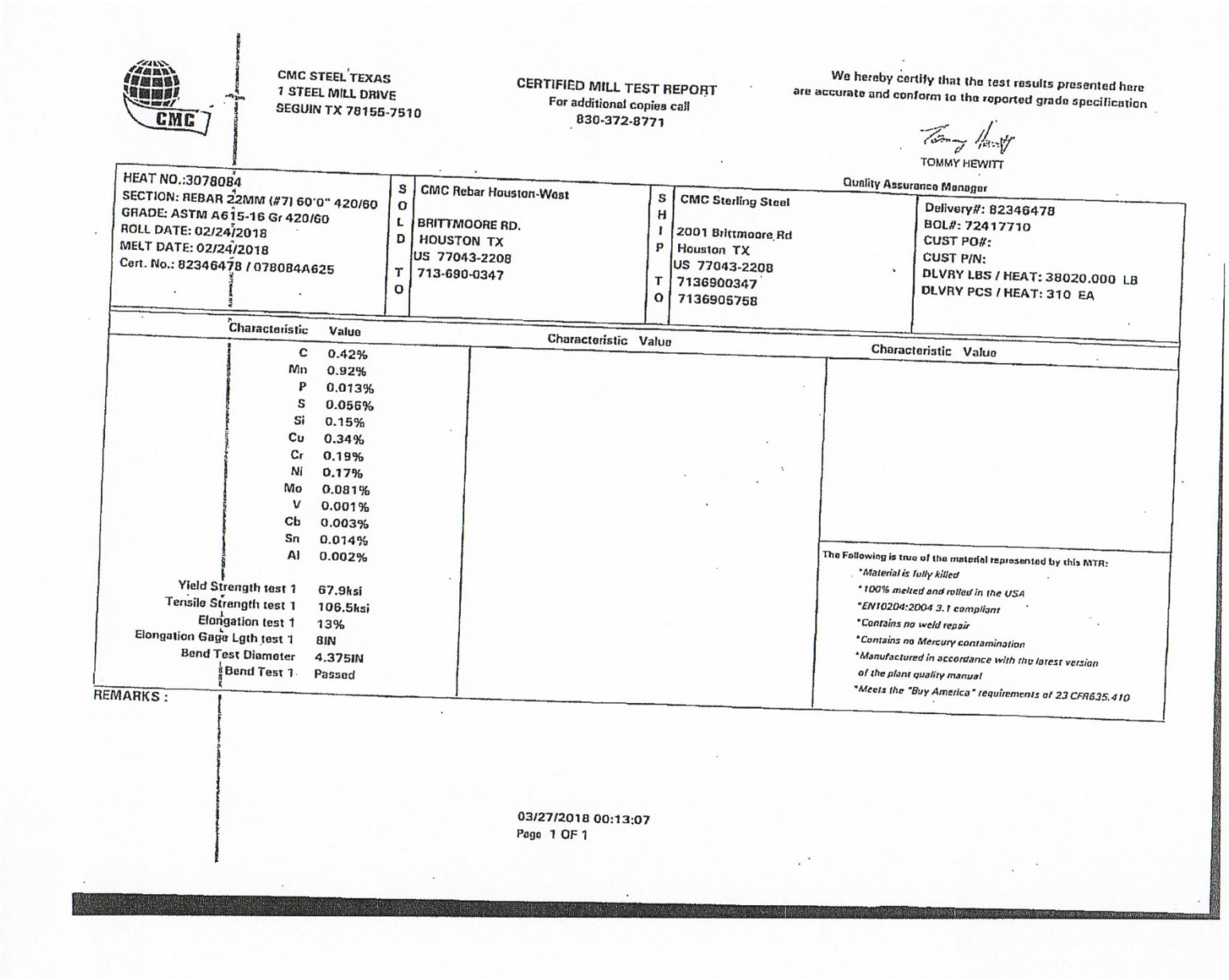

CMC STEEL TEXAS
1 STEEL MILL DRIVE
SEGUIN TX 78155-7510

CERTIFIED MILL TEST REPORT

For additional copies call
830-372-8771

We hereby certify that the test results presented here are accurate and conform to the reported grade specification

TOMMY HEWITT
Quality Assurance Manager

HEAT NO.:3078084
SECTION: REBAR 22MM (#7) 60'0" 420/60
GRADE: ASTM A615-16 Gr 420/60
ROLL DATE: 02/24/2018
MELT DATE: 02/24/2018
Cert. No.: 82346478 / 078084A625

SOLD TO
CMC Rebar Houston-West

BRITTMOORE RD.
HOUSTON TX
US 77043-2208
713-690-0347

SHIP TO
CMC Sterling Steel

2001 Brittmoore Rd
Houston TX
US 77043-2208
7136900347
7136905758

Delivery#: 82346478
BOL#: 72417710
CUST PO#:
CUST P/N:
DLVRY LBS / HEAT: 38020.000 LB
DLVRY PCS / HEAT: 310 EA

Characteristic	Value	Characteristic	Value	Characteristic	Value
C	0.42%				
Mn	0.92%				
P	0.013%				
S	0.056%				
Si	0.15%				
Cu	0.34%				
Cr	0.19%				
Ni	0.17%				
Mo	0.081%				
V	0.001%				
Cb	0.003%				
Sn	0.014%				
Al	0.002%				
Yield Strength test 1	67.9ksi				
Tensile Strength test 1	106.5ksi				
Elongation test 1	13%				
Elongation Gage Lgth test 1	8IN				
Bend Test Diameter	4.375IN				
Bend Test 1	Passed				

The Following is true of the material represented by this MTR:
- *Material is fully killed
- *100% melted and rolled in the USA
- *EN10204:2004 3.1 compliant
- *Contains no weld repair
- *Contains no Mercury contamination
- *Manufactured in accordance with the latest version of the plant quality manual
- *Meets the "Buy America" requirements of 23 CFR635.410

REMARKS :

03/27/2018 00:13:07
Page 1 OF 1

CMC STEEL TEXAS
1 STEEL MILL DRIVE
SEGUIN TX 78155-7510

CERTIFIED MILL TEST REPORT

For additional copies call
830-372-8771

We hereby certify that the test results presented here are accurate and conform to the reported grade specification

TOMMY HEWITT
Quality Assurance Manager

HEAT NO.:3078559
SECTION: REBAR 25MM (#8) 50'0" 420/60
GRADE: ASTM A615-16 Gr 420/60
ROLL DATE: 03/17/2018
MELT DATE: 03/14/2018
Cert. No.: 82343437 / 078559A061

SOLD TO
CMC Rebar Houston-West
BRITTMOORE RD.
HOUSTON TX
US 77043-2208
713-690-0347

SHIP TO
CMC Sterling Steel
2001 Brittmoore Rd
Houston TX
US 77043-2208
7136900347
7136905758

Delivery#: 82343437
BOL#: 72412704
CUST PO#:
CUST P/N:
DLVRY LBS / HEAT: 21360.000 LB
DLVRY PCS / HEAT: 160 EA

Characteristic	Value
C	0.43%
Mn	0.93%
P	0.011%
S	0.045%
Si	0.21%
Cu	0.29%
Cr	0.20%
Ni	0.23%
Mo	0.082%
V	0.001%
Cb	0.002%
Sn	0.011%
Al	0.002%
Yield Strength test 1	70.3ksi
Tensile Strength test 1	109.8ksi
Elongation test 1	14%
Elongation Gage Lgth test 1	8IN
Bend Test Diameter	5.000IN
Bend Test 1	Passed

Characteristic	Value

Characteristic	Value

The Following is true of the material represented by this MTR:
- *Material is fully killed
- *100% melted and rolled in the USA
- *EN10204:2004 3.1 compliant
- *Contains no weld repair
- *Contains no Mercury contamination
- *Manufactured in accordance with the latest version of the plant quality manual
- *Meets the "Buy America" requirements of 23 CFR635.410

REMARKS :

03/20/2018 18:55:38
Page 1 OF 1

Parapet, P1
(1 Load)
4"
Deck, D1
(1 Load)
Wall, W1
(1 Load)
Wall, Deck and Parapet
Texas A&M Transportation Institute
Roadside Safety and Physical Security Division - Proving Ground
Project #469468-3 C411
Drawn by BLG
Sheet 1 of 1 Concrete Map
T:\1-ProjectFiles\469468 - TxDOT - Blight-3 C411 Bridge Rail\Drafting, C411\469468-3 Concrete Map

Texas A&M Transportation Institute Proving Ground 3100 SH 47, Bldg 7091 Bryan, TX 77807 Texas A&M University College Station, TX 77843 Phone 979-845-6375	5.7.2 Concrete Sampling	Doc. No. QPF 5.7.2	Revision Date: 2018-04-17
Quality Policy Form	Revised by: B. L. Griffith Approved by: D. Kuhn	Revision: 6	Page: 1 of 1

Project No: 469468-X-23 PCB 5-22 **Casting Date:** 2018-05-02 **Mix Design (psi):** class S 4000psi

Printed Name of Technician taking Sample: GREG FRITZ

Printed Name of Technician breaking Sample: GREG FRITZ

Signed Name of Technician taking Sample: [signature]

Signed Name of Technician breaking Sample: [signature]

Load No.	Truck No.	Ticket No.	Location (from concrete map)
P1/T1	390142	0021013	All of Parapet

Load No.	Break Date	Cylinder Age	Total Load (lbs)	Break (psi)	Average
P1/T1	2018-5-22	20 DAYS	146,000	5165	
P1/T1	↓	↓	149,000	5270	5200
P1/T1	↓	↓	146,000	5165	

Texas A&M Transportation Institute Proving Ground 3100 SH 47, Bldg 7091 Bryan, TX 77807 Texas A&M University College Station, TX 77843 Phone 979-845-6375	5.7.2 Concrete Sampling	Doc. No. QPF 5.7.2	Revision Date: 2018-04-17
Quality Policy Form	Revised by: B. L. Griffith Approved by: D. Kuhn	Revision: 6	Page: 1 of 1

Project No: 469468-23 DOC-522 **Casting Date:** 2018-04-25 **Mix Design (psi):** Class S 4000psi

Printed Name of Technician taking Sample: GREG FRITZ

Printed Name of Technician breaking Sample: GREG FRITZ

Signed Name of Technician taking Sample:

Signed Name of Technician breaking Sample:

Load No.	Truck No.	Ticket No.	Location (from concrete map)
W1/T1	390141	0020804	Lower vertical wall 5" form start of Flat
D1/T2	390106	0020806	Filled up remaining volume

Load No.	Break Date	Cylinder Age	Total Load (lbs)	Break (psi)	Average
W1/T1	2018-5-22	27 DAYS	160,000	5460	
~~D1/T2~~ OE			183,000	6475	6085
W1/T1			173,500	6120	
D1/T2			167,000	5910	
D1/T2			161,000	5695	5730
D1/T2	"	"	158,000	5590	

KNIFE RIVER
AN MDU RESOURCES COMPANY

SOUTH REGION/MAIN OFFICE
6310 State Highway 21 West
Bryan, TX 77807
PH: (979) 361-2900
FAX: (979) 361-2920

RB 0020806

Riverbend

ELLIS-MCGINNIS CONSTRUC
P.O. BOX 40
EDDY

Disp Order#: 2014

SHIP TO:
RELLIS CAMPUS/3100 STATE HWY 47, LF47 LF RELLIS CAMPUS RT AT THE STOP SIGN 2ND STOP TAKE A LF 2ND STOP TAKE A RT GO 2 STOP SIGN D OWN TAKE A LF GO TO MORE STOP SI GN DOWN TAKE RT GO THE NEXT STOP

TIME	FORMULA	LOAD SIZE	YARDS ORDERED		DRIVER/TRUCK		PLANT TRANSACTION #
10:59:46	CLSLS	9.00	18.00	2801	HAROLD JC	390106	
DATE	**PROJECT**	**LOAD #**	**YARDS DEL.**	**BATCH #**	**WATER TRIM**	**SLUMP**	**TICKET NUMBER**
04/25/18	TAMUTRANS	2	18.00			5.00 in	20011911

WARNING
IRRITATING TO THE SKIN AND EYES
Contains Portland Cement. Wear Rubber Boots and Gloves, PROLONGED CONTACT MAY CAUSE BURNS. Avoid Contact With Eyes and Prolonged Contact With Skin. In Case of Contact With Skin or Eyes, Flush Thoroughly With Water. If Irritation Persists, Get Medical Attention. **KEEP CHILDREN AWAY.**

CONCRETE is a PERISHABLE COMMODITY and BECOMES THE PROPERTY of the PURCHASER UPON LEAVING the PLANT. ANY CHANGES or CANCELLATION of ORIGINAL INSTRUCTIONS MUST be TELEPHONED to the OFFICE BEFORE **LOADING** starts.
The undersigned promises to pay all costs, including reasonable attorney's fees, incurred in collecting any sums owed.
All accounts not paid within 30 days of delivery will bear interest at the rate of 18% per annum.
Not Responsible for Reactive Aggregate or Color Quality. No Claim Allowed Unless Made at Time Material is Delivered.
A $15.00 Service Charge and Loss of the Cash Discount will be Collected on all Returned Checks.
Excess Delay Time Charged @ $75.00/hr.

PROPERTY DAMAGE RELEASE
(TO BE SIGNED IF DELIVERY TO BE MADE INSIDE CURB LINE)
Dear Customer - The driver of this truck in presenting this RELEASE to you for your signature is of the opinion that the size and weight of this truck may possibly cause damage to the premises and/or adjacent property if he places the material in this load where you desire it. It is our wish to help you in every way that we can, but in order to do this the driver is requesting that you sign this RELEASE relieving him and this supplier from any responsibility from damage that may occur to the premises and or adjacent property, buildings, sidewalks, drive-ways, curbs, etc., by the delivery of this material, and that you also agree to help him remove mud from the wheels of his vehicle so that he will not litter the public street. Further, as additional consideration; the undersigned agrees to indemnify and hold harmless the driver of this truck and this supplier for any and all damage to the premises and/or adjacent property which may be claimed by anyone to have arisen out of delivery of this order.
SIGNED:
X

Excessive Water is Detrimental to Concrete Performance.
H_2O Added by Request / Authorized By:
GAL X
WEIGHMASTER

Thank you for your business

NOTICE: MY SIGNATURE BELOW INDICATES THAT I HAVE READ THE HEALTH WARNING NOTICE AND SUPPLIER WILL NOT BE RESPONSIBLE FOR ANY DAMAGE CAUSED WHEN DELIVERING INSIDE CURB LINE.
LOAD RECEIVED BY
X

QUANTITY	CODE	DESCRIPTION	UNIT PRICE	EXTENDED PRICE
9.00 yd	CLSLS	CLASS S 4000 PSI		

OUR MIXES ARE DESIGNED TO ACHIEVE SPECIFICATIONS AT A MAX 4" SLUMP

RETURNED TO PLANT	LEFT JOB	FINISH UNLOADING	ON SITE TESTING		AIR TEMP
			TESTING LAB:		
LEFT PLANT	**ARRIVED JOB**	**START UNLOADING**	**SLUMP**	**CONCRETE TEMP.**	
11:14	11:29	11:52			
TOTAL ROUND TRIP	**TOTAL AT JOB**	**UNLOADING TIME**	**AIR**	**CYLINDERS**	

Prev. AMT
Ticket Total
Grand Total

ADDITIONAL CHARGE 1 _____
ADDITIONAL CHARGE 2 _____
GRAND TOTAL ▶

Truck	Driver	User	Disp Ticket Num	Ticket ID	Time	Date
390106	502353	user	20011911	11873	10:59	4/25/18

RB 0020806

Load Size	Mix Code	Returned	Qty	Mix Age	Seq	Load ID
9.00 CYDS	CLSLS				D	15

Material	Design Qty	Required	Batched		% Var	% Moisture		Actual	Wat
CEMENT	417.00 lb	3753.00 lb	3758.00 lb		0.13%				
FLYASH	143.00 lb	1287.00 lb	1286.00 lb		-0.08%				
SAND	1225 lb	11388 lb	11710 lb		1.08%	5.25% M		78 gl	
LIMSTN*	1380 lb	12544 lb	12620 lb		0.60%	1.00% M		15 gl	
GRAVEL3/8"	460 lb	4202 lb	4560 lb	>	8.52%	1.50% M		8 gl	
WATER	252 lb	1354 lb	1352 lb		-0.12%			162 gl	
POZZ30	25.00 oz	225.00 oz	225.00 oz		0.00%				
AE-30	3.00 oz	27.00 oz	27.00 oz		0.00%				

Actual
Num Batches: 1
Load 39302 lb | Design W/C: 0.450 | Water/Cement: 0.450 T | Design 271.8 gl | Actual 255.1 gl | To Add: 16.7 gl
Slump: 5.00 in | Water in Truck: 0.0 gl | Adjust Water: 0.0 gl / Load | Trim Water: -2.0 gl / CYD
Actual W/C Ratio: 0.422 | Actual Water: 255 gl | Batched Cement: 5044 lb | Allowable Water: 141 gl

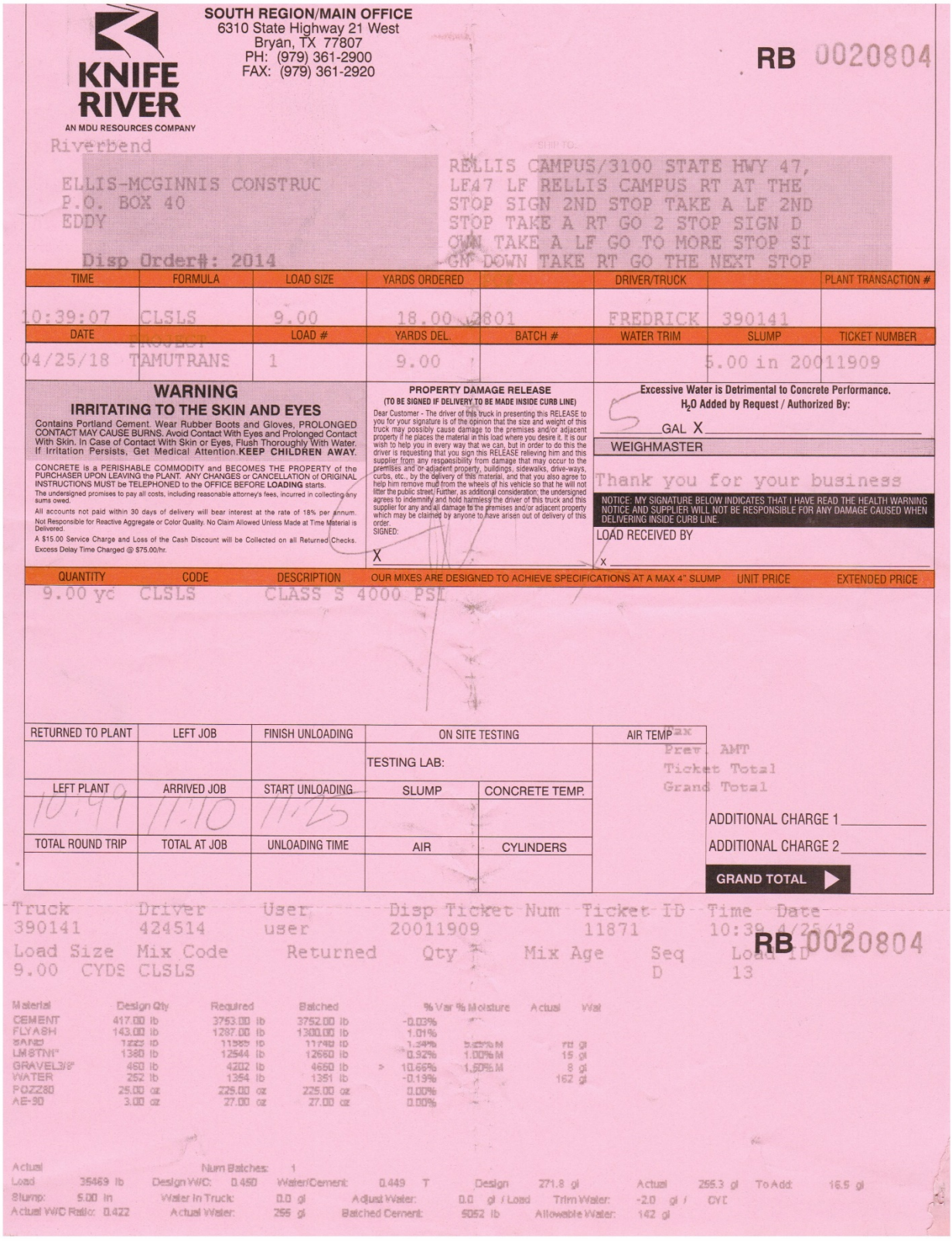

KNIFE RIVER
AN MDU RESOURCES COMPANY

SOUTH REGION/MAIN OFFICE
6310 State Highway 21 West
Bryan, TX 77807
PH: (979) 361-2900
FAX: (979) 361-2920

RB 0020804

Riverbend

ELLIS-MCGINNIS CONSTRUC
P.O. BOX 40
EDDY

Disp Order#: 2014

SHIP TO:
RELLIS CAMPUS/3100 STATE HWY 47,
LF47 LF RELLIS CAMPUS RT AT THE
STOP SIGN 2ND STOP TAKE A LF 2ND
STOP TAKE A RT GO 2 STOP SIGN D
OWN TAKE A LF GO TO MORE STOP SI
GN DOWN TAKE RT GO THE NEXT STOP

TIME	FORMULA	LOAD SIZE	YARDS ORDERED		DRIVER/TRUCK		PLANT TRANSACTION #
10:39:07	CLSLS	9.00	18.00	2801	FREDRICK	390141	
DATE	PROJECT	LOAD #	YARDS DEL.	BATCH #	WATER TRIM	SLUMP	TICKET NUMBER
04/25/18	TAMUTRANS	1	9.00			5.00 in	20011909

WARNING
IRRITATING TO THE SKIN AND EYES
Contains Portland Cement. Wear Rubber Boots and Gloves, PROLONGED CONTACT MAY CAUSE BURNS. Avoid Contact With Eyes and Prolonged Contact With Skin. In Case of Contact With Skin or Eyes, Flush Thoroughly With Water. If Irritation Persists, Get Medical Attention. **KEEP CHILDREN AWAY.**

CONCRETE is a PERISHABLE COMMODITY and BECOMES THE PROPERTY of the PURCHASER UPON LEAVING the PLANT. ANY CHANGES or CANCELLATION of ORIGINAL INSTRUCTIONS MUST be TELEPHONED to the OFFICE BEFORE **LOADING** starts.
The undersigned promises to pay all costs, including reasonable attorney's fees, incurred in collecting any sums owed.
All accounts not paid within 30 days of delivery will bear interest at the rate of 18% per annum.
Not Responsible for Reactive Aggregate or Color Quality. No Claim Allowed Unless Made at Time Material is Delivered.
A $15.00 Service Charge and Loss of the Cash Discount will be Collected on all Returned Checks.
Excess Delay Time Charged @ $75.00/hr.

PROPERTY DAMAGE RELEASE
(TO BE SIGNED IF DELIVERY TO BE MADE INSIDE CURB LINE)
Dear Customer - The driver of this truck in presenting this RELEASE to you for your signature is of the opinion that the size and weight of this truck may possibly cause damage to the premises and/or adjacent property if he places the material in this load where you desire it. It is our wish to help you in every way that we can, but in order to do this the driver is requesting that you sign this RELEASE relieving him and this supplier from any responsibility from damage that may occur to the premises and or adjacent property, buildings, sidewalks, drive-ways, curbs, etc., by the delivery of this material, and that you also agree to help him remove mud from the wheels of his vehicle so that he will not litter the public street. Further, as additional consideration; the undersigned agrees to indemnify and hold harmless the driver of this truck and this supplier for any and all damage to the premises and/or adjacent property which may be claimed by anyone to have arisen out of delivery of this order.
SIGNED:
X

Excessive Water is Detrimental to Concrete Performance.
H_2O Added by Request / Authorized By:
GAL X
WEIGHTMASTER

Thank you for your business

NOTICE: MY SIGNATURE BELOW INDICATES THAT I HAVE READ THE HEALTH WARNING NOTICE AND SUPPLIER WILL NOT BE RESPONSIBLE FOR ANY DAMAGE CAUSED WHEN DELIVERING INSIDE CURB LINE.
LOAD RECEIVED BY
X

QUANTITY	CODE	DESCRIPTION	UNIT PRICE	EXTENDED PRICE
9.00 yd	CLSLS	CLASS S 4000 PSI		

OUR MIXES ARE DESIGNED TO ACHIEVE SPECIFICATIONS AT A MAX 4" SLUMP

RETURNED TO PLANT	LEFT JOB	FINISH UNLOADING	ON SITE TESTING		AIR TEMP
			TESTING LAB:		
LEFT PLANT	ARRIVED JOB	START UNLOADING	SLUMP	CONCRETE TEMP.	
10:49	11:10	11:25			
TOTAL ROUND TRIP	TOTAL AT JOB	UNLOADING TIME	AIR	CYLINDERS	

Prev. AMT
Ticket Total
Grand Total

ADDITIONAL CHARGE 1
ADDITIONAL CHARGE 2
GRAND TOTAL

Truck	Driver	User	Disp Ticket Num	Ticket ID	Time	Date
390141	424514	user	20011909	11871	10:39	4/25/18

Load Size	Mix Code	Returned	Qty	Mix Age	Seq	Load ID
9.00 CYDS	CLSLS				D	13

RB 0020804

Material	Design Qty	Required	Batched		% Var	% Moisture	Actual	Wat
CEMENT	417.00 lb	3753.00 lb	3752.00 lb		-0.03%			
FLYASH	143.00 lb	1287.00 lb	1300.00 lb		1.01%			
SAND	1225 lb	11385 lb	11748 lb		3.19%	5.00% M	211 gl	
LMSTN#*	1380 lb	12544 lb	12660 lb		0.92%	1.00% M	15 gl	
GRAVEL3/8"	460 lb	4202 lb	4660 lb	>	10.66%	1.50% M	8 gl	
WATER	252 lb	1364 lb	1351 lb		-0.13%		162 gl	
POZZ80	25.00 oz	225.00 oz	225.00 oz		0.00%			
AE-90	3.00 oz	27.00 oz	27.00 oz		0.00%			

Actual Num Batches: 1
Load: 35469 lb Design W/C: 0.450 Water/Cement: 0.449 T Design: 271.8 gl Actual: 266.3 gl To Add: 16.5 gl
Slump: 5.00 in Water In Truck: 0.0 gl Adjust Water: 0.0 gl / Load Trim Water: -2.0 gl / CYL
Actual W/C Ratio: 0.422 Actual Water: 266 gl Batched Cement: 5052 lb Allowable Water: 142 gl

KNIFE RIVER
AN MDU RESOURCES COMPANY

SOUTH REGION/MAIN OFFICE
6310 State Highway 21 West
Bryan, TX 77807
PH: (979) 361-2900
FAX: (979) 361-2920

RB 0021013

SOLD TO
Riverbend

ELLIS-MCGINNIS CONSTRUC
P.O. BOX 40
EDDY

Disp Order#: 2017

SHIP TO

RELLIS CAMPUS 3100 STATE HWY 47, LF47 LF RELLIS CAMPUS RT AT THE STOP SIGN 2ND STOP TAKE A LF 2ND STOP TAKE A RT GO 2 STOP SIGN D OWN TAKE A LF GO TO MORE STOP SI GN DOWN TAKE RT GO THE NEXT STOP

TIME	FORMULA	LOAD SIZE	YARDS ORDERED	PO#	DRIVER/TRUCK		PLANT TRANSACTION #
9:17:46	CLSLS	8.50	8.50	2801	CHRISTOPH	390142	
DATE	**PROJECT**	**LOAD #**	**YARDS DEL.**	**BATCH #**	**WATER TRIM**	**SLUMP**	**TICKET NUMBER**
05/02/18	TAMUTRANS	1	8.50			5.00 in	20012121

WARNING
IRRITATING TO THE SKIN AND EYES
Contains Portland Cement. Wear Rubber Boots and Gloves, PROLONGED CONTACT MAY CAUSE BURNS. Avoid Contact With Eyes and Prolonged Contact With Skin. In Case of Contact With Skin or Eyes, Flush Thoroughly With Water. If Irritation Persists, Get Medical Attention. **KEEP CHILDREN AWAY.**

CONCRETE is a PERISHABLE COMMODITY and BECOMES THE PROPERTY of the PURCHASER UPON LEAVING the PLANT. ANY CHANGES or CANCELLATION of ORIGINAL INSTRUCTIONS MUST be TELEPHONED to the OFFICE BEFORE **LOADING** starts.
The undersigned promises to pay all costs, including reasonable attorney's fees, incurred in collecting any sums owed.
All accounts not paid within 30 days of delivery will bear interest at the rate of 18% per annum.
Not Responsible for Reactive Aggregate or Color Quality. No Claim Allowed Unless Made at Time Material is Delivered.
A $15.00 Service Charge and Loss of the Cash Discount will be Collected on all Returned Checks.
Excess Delay Time Charged @ $75.00/hr.

PROPERTY DAMAGE RELEASE
(TO BE SIGNED IF DELIVERY TO BE MADE INSIDE CURB LINE)
Dear Customer - The driver of this truck in presenting this RELEASE to you for your signature is of the opinion that the size and weight of this truck may possibly cause damage to the premises and/or adjacent property if he places the material in this load where you desire it. It is our wish to help you in every way that we can, but in order to do this the driver is requesting that you sign this RELEASE relieving him and this supplier from any responsibility from damage that may occur to the premises and or adjacent property, buildings, sidewalks, drive-ways, curbs, etc., by the delivery of this material, and that you also agree to help him remove mud from the wheels of his vehicle so that he will not litter the public street. Further, as additional consideration; the undersigned agrees to indemnify and hold harmless the driver of this truck and this supplier for any and all damage to the premises and/or adjacent property which may be claimed by anyone to have arisen out of delivery of this order.
SIGNED:
X

Excessive Water is Detrimental to Concrete Performance.
H_2O Added by Request / Authorized By:
GAL X
WEIGHMASTER

Thank you for your business

NOTICE: MY SIGNATURE BELOW INDICATES THAT I HAVE READ THE HEALTH WARNING NOTICE AND SUPPLIER WILL NOT BE RESPONSIBLE FOR ANY DAMAGE CAUSED WHEN DELIVERING INSIDE CURB LINE.
LOAD RECEIVED BY
X

QUANTITY	CODE	DESCRIPTION	UNIT PRICE	EXTENDED PRICE
8.50 yd	CLSLS	CLASS S 4000 PSI		

OUR MIXES ARE DESIGNED TO ACHIEVE SPECIFICATIONS AT A MAX 4" SLUMP

RETURNED TO PLANT	LEFT JOB	FINISH UNLOADING	ON SITE TESTING		AIR TEMP
			TESTING LAB:		
LEFT PLANT	**ARRIVED JOB**	**START UNLOADING**	**SLUMP**	**CONCRETE TEMP.**	
946	1003	1004			
TOTAL ROUND TRIP	**TOTAL AT JOB**	**UNLOADING TIME**	**AIR**	**CYLINDERS**	

Prev. AMT
Ticket Total
Grand Total
ADDITIONAL CHARGE 1
ADDITIONAL CHARGE 2
GRAND TOTAL

Truck	Driver	User	Disp Ticket Num	Ticket ID	Time	Date
390142	474521	user	20012121	12080	9:17	

RB 0021013

Load Size	Mix Code	Returned	Qty	Mix Age	Seq	Load ID
8.50 CYDS	CLSLS				D	52

Material	Design Qty	Required	Batched	% Var	% Moisture	Actual	Wat
CEMENT	417.00 lb	3544.50 lb	3526.00 lb	-0.52%			
FLYASH	143.00 lb	1215.50 lb	1204.00 lb	-0.95%			
SAND	1223 lb	10941 lb	11110 lb	1.54%	5.25% M	66 gl	
LMSTN#"	1380 lb	11789 lb	11890 lb	0.86%	0.50% M	7 gl	
GRAVEL3/8"	460 lb	3949 lb	3950 lb	0.02%	1.00% M	5 gl	
WATER	252 lb	1357 lb	1354 lb	-0.19%		162 gl	
POZZ80	25.00 oz	212.50 oz	213.00 oz	0.24%			
AE-90	3.00 oz	25.50 oz	25.50 oz	0.00%			

Actual Load	33049 lb	Num Batches:	1						
Slump:	5.00 in	Design W/C:	0.450	Water/Cement:	0.453	T	Design	256.7 gl	Actual 240.4 gl To Add: 16.2 gl
Actual W/C Ratio:	0.424	Water in Truck:	0.0 gl	Adjust Water:	0.0 gl / Load		Trim Water:	-2.0 gl / CYD	
		Actual Water:	240 gl	Batched Cement:	4730 lb		Allowable Water:	122 gl	

C.3 *MASH* TEST 2-10 (CRASH TEST NO. 469468-3-1)

C.3.1 Vehicle Properties and Information

Table C.1. Vehicle Properties for Test No. 469468-3-1.

Date: 2018-05-24 Test No.: 469468-3-1 VIN No.: KNADH4A37A6652037

Year: 2010 Make: KIA Model: RIO

Tire Inflation Pressure: 32 PSI Odometer: 217070 Tire Size: 185/65R14

Describe any damage to the vehicle prior to test: None

● Denotes accelerometer location.

NOTES: None

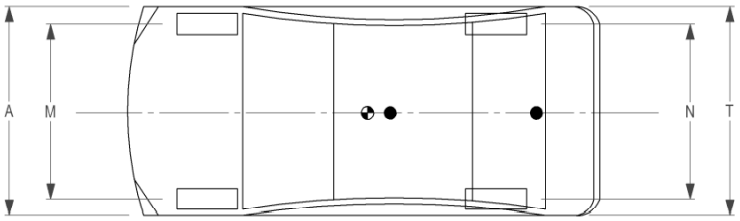

Engine Type: 4 cylinder
Engine CID: 1.6 L
Transmission Type:
☑ Auto or ☐ Manual
☑ FWD ☐ RWD ☐ 4WD
Optional Equipment:
None

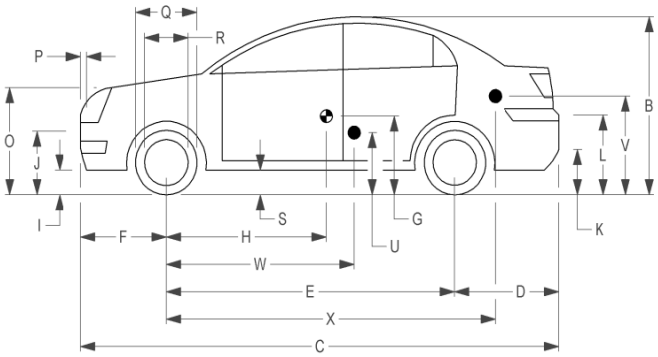

Dummy Data:
Type: 50th percentile male
Mass: 165 lb
Seat Position: IMPACT SIDE

Geometry: inches

A	66.38	F	33.00	K	12.25	P	4.12	U	15.75
B	51.50	G		L	25.25	Q	22.50	V	21.50
C	165.75	H	35.90	M	57.75	R	15.50	W	35.90
D	34.00	I	7.75	N	57.70	S	8.25	X	107.00
E	98.75	J	21.50	O	28.25	T	66.20		
	Wheel Center Ht Front		11.00		Wheel Center Ht Rear		11.00	W-H	0.00

RANGE LIMIT: A = 65 ±3 inches; C = 169 ±8 inches; E = 98 ±5 inches; F = 35 ±4 inches; H = 39 ±4 inches; O = TOP OF RADIATOR SUPPORT ~~(24 ±4inches)~~; M+N/2 = 56 ±2 inches; W-H < 2 inches or use MASH Paragraph A4.3.2

GVWR Ratings:		**Mass:** lb	Curb	Test Inertial	Gross Static
Front	1718	M_{front}	1583	1556	1641
Back	1874	M_{rear}	907	891	971
Total	3638	M_{Total}	2490	2447	2612

Allowable TIM = 2420 lb ±55 lb | Allowable GSM = 2585 lb ± 55 lb

Mass Distribution:
lb LF: 780 RF: 776 LR: 449 RR: 442

Table C.2. Exterior Crush Measurements of Vehicle for Test No. 469468-3-1.

Date: 2018-05-24 Test No.: 469468-3-1 VIN No.: KNADH4A37A6652037

Year: 2010 Make: KIA Model: RIO

VEHICLE CRUSH MEASUREMENT SHEET[1]

Complete When Applicable	
End Damage	Side Damage
Undeformed end width _____	Bowing: B1 _____ X1 _____
Corner shift: A1 _____	B2 _____ X2 _____
A2 _____	
End shift at frame (CDC)	Bowing constant
(check one)	$\frac{X1+X2}{2}$ = _____
< 4 inches _____	
≥ 4 inches _____	

Note: Measure C_1 to C_6 from Driver to Passenger Side in Front or Rear impacts – Rear to Front in Side Impacts.

Specific Impact Number	Plane* of C-Measurements	Direct Damage Width** (CDC)	Direct Damage Max*** Crush	Field L**	C_1	C_2	C_3	C_4	C_5	C_6	±D
1	AT FT BUMPER	17	14	36	2	4	4.5	5.5	9	14	+9
2	ABOVE FT BUMPER	17	12	38	0	2	4	5	9	12	+60
	Units in inches										

[1]Table taken from National Accident Sampling System (NASS).

*Identify the plane at which the C-measurements are taken (e.g., at bumper, above bumper, at sill, above sill, at beltline, etc.) or label adjustments (e.g., free space).

Free space value is defined as the distance between the baseline and the original body contour taken at the individual C locations. This may include the following: bumper lead, bumper taper, side protrusion, side taper, etc. Record the value for each C-measurement and maximum crush.

**Measure and document on the vehicle diagram the beginning or end of the direct damage width and field L (e.g., side damage with respect to undamaged axle).

***Measure and document on the vehicle diagram the location of the maximum crush.

Note: Use as many lines/columns as necessary to describe each damage profile.

Table C.3. Occupant Compartment Measurements of Vehicle for Test No. 469468-3-1.

Date:	2018-05-24	Test No.:	469468-3-1	VIN No.:	KNADH4A37A6652037
Year:	2010	Make:	KIA	Model:	RIO

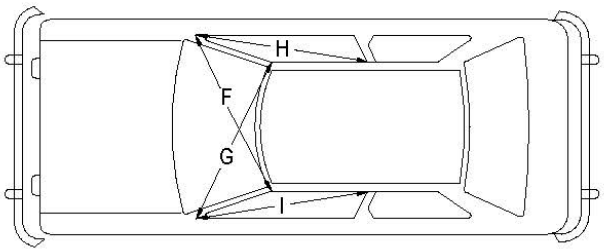

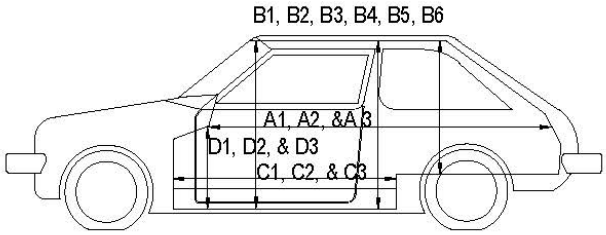

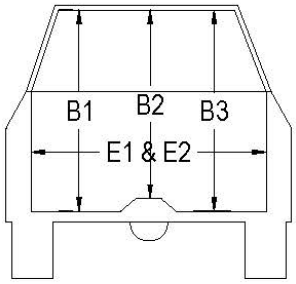

OCCUPANT COMPARTMENT DEFORMATION MEASUREMENT

	Before	After	Differ.
	inches		
A1	67.50	67.50	0.00
A2	67.25	67.25	0.00
A3	67.75	67.00	-0.75
B1	40.50	40.50	0.00
B2	39.00	39.00	0.00
B3	40.50	40.00	-0.50
B4	36.25	36.25	0.00
B5	36.00	36.00	0.00
B6	36.25	36.25	0.00
C1	26.00	26.00	0.00
C2	0.00	0.00	0.00
C3	26.00	22.00	-4.00
D1	9.50	9.50	0.00
D2	0.00	0.00	0.00
D3	9.50	9.00	-0.50
E1	51.50	51.00	-0.50
E2	51.00	52.00	1.00
F	51.00	51.00	0.00
G	51.00	51.00	0.00
H	37.50	37.50	0.00
I	37.50	37.50	0.00
J*	51.00	49.50	-1.50

*Lateral area across the cab from
driver's side kickpanel to passenger's side kickpanel.

C.3.2 Sequential Photographs

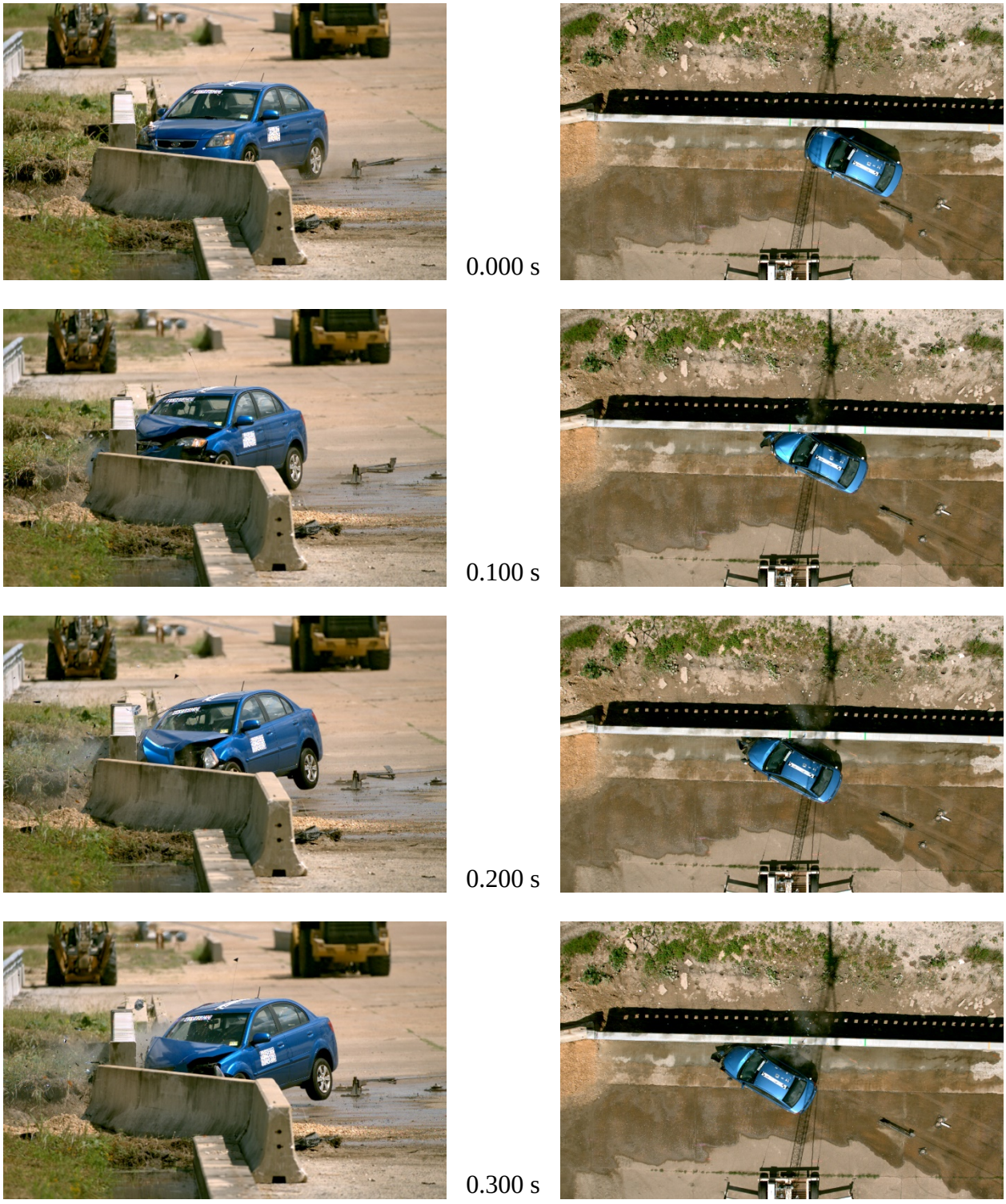

Figure C.1. Sequential Photographs for Test No. 469468-3-1 (Gut and Overhead Views).

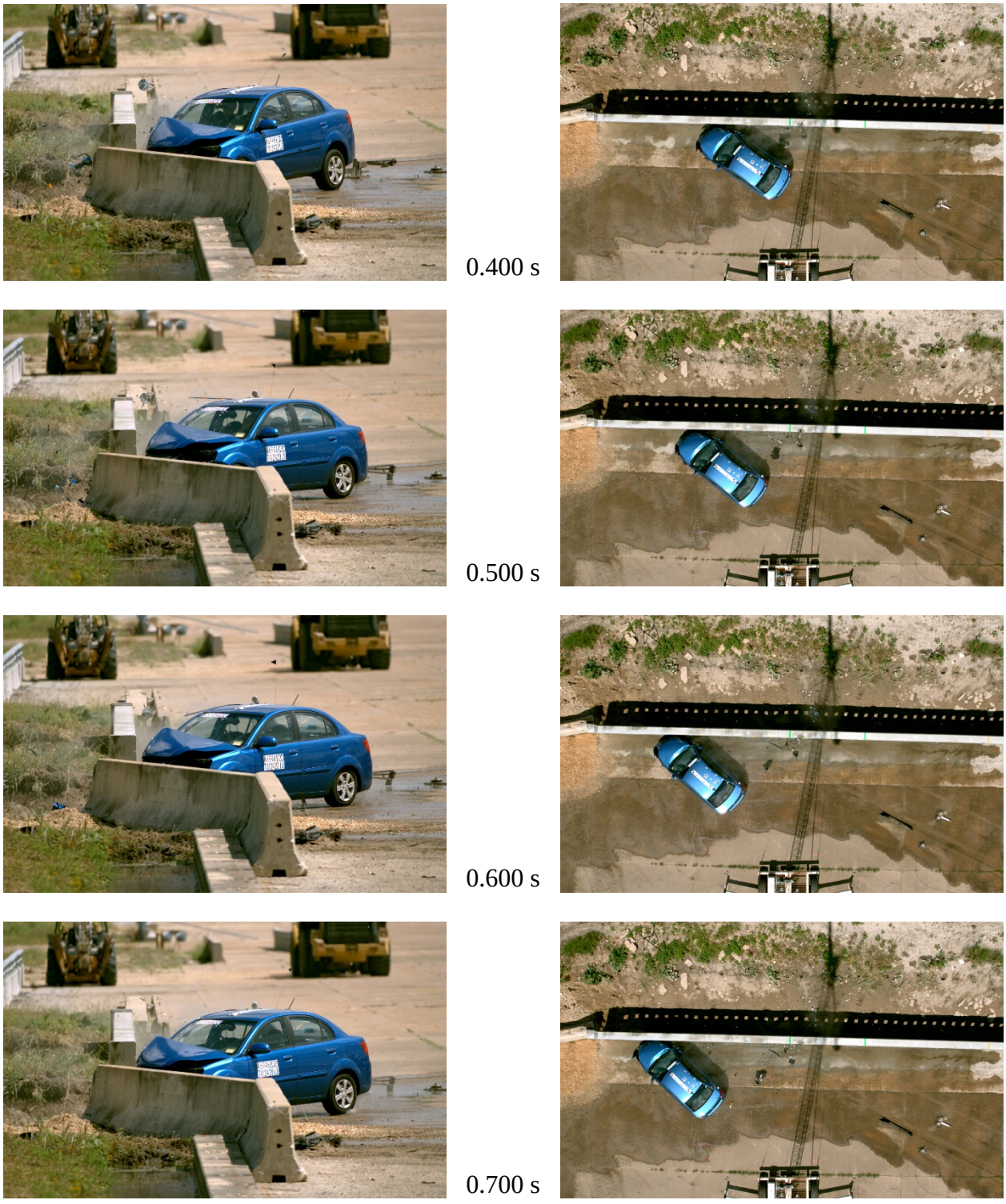

Figure C.1. Sequential Photographs for Test No. 469468-3-1 (Gut and Overhead Views) (Continued).



0.000 s



0.200 s



0.300 s



0.400 s



0.500 s



0.600 s



0.700 s



0.800 s

Figure C.2. Sequential Photographs for Test No. 469468-3-1 (Rear View).

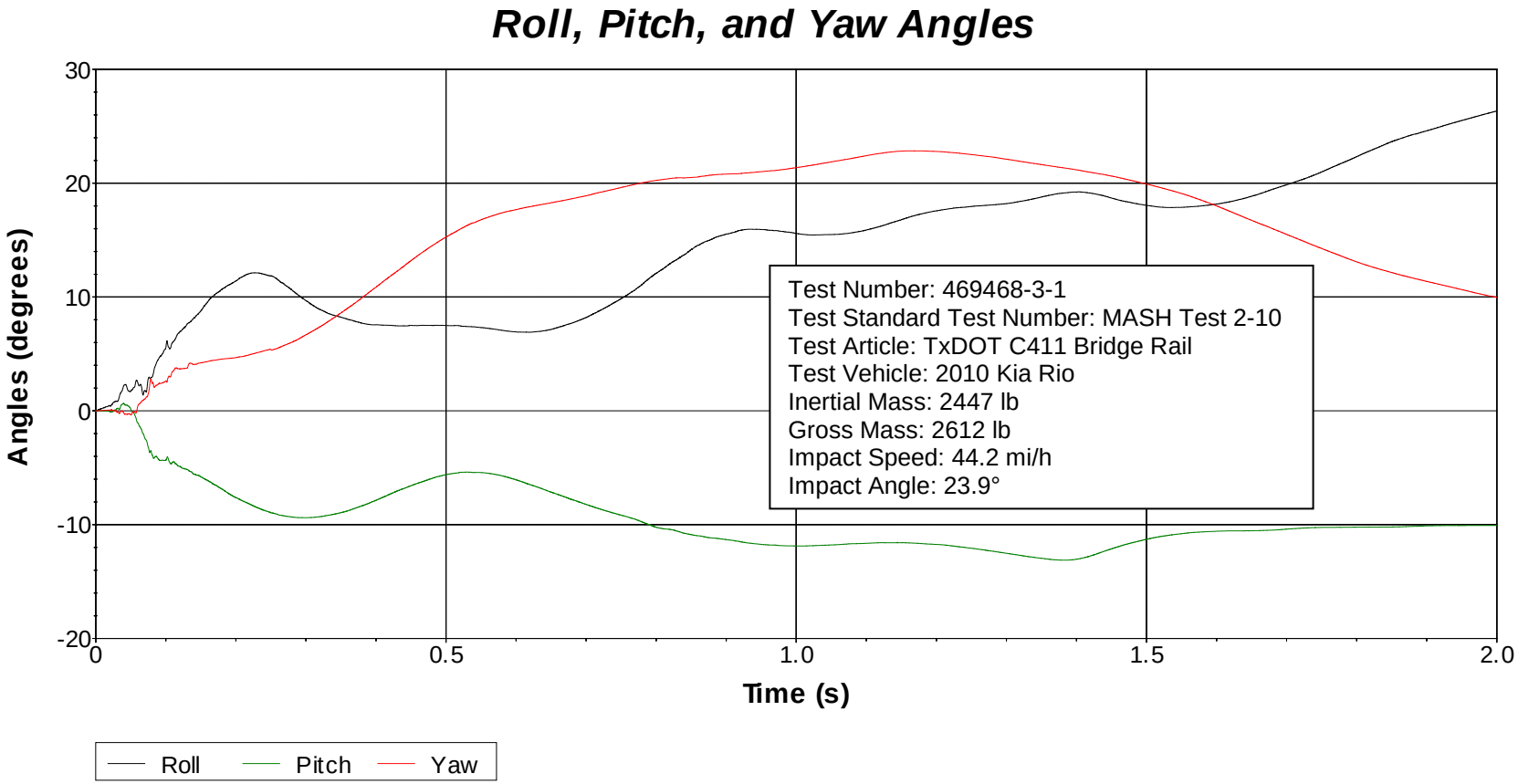

Axes are vehicle-fixed.
Sequence for determining orientation:

1. Yaw.
2. Pitch.
3. Roll.

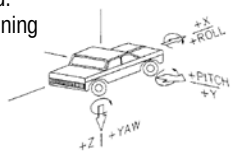

Figure C.3. Vehicle Angular Displacements for Test No. 469468-3-1.

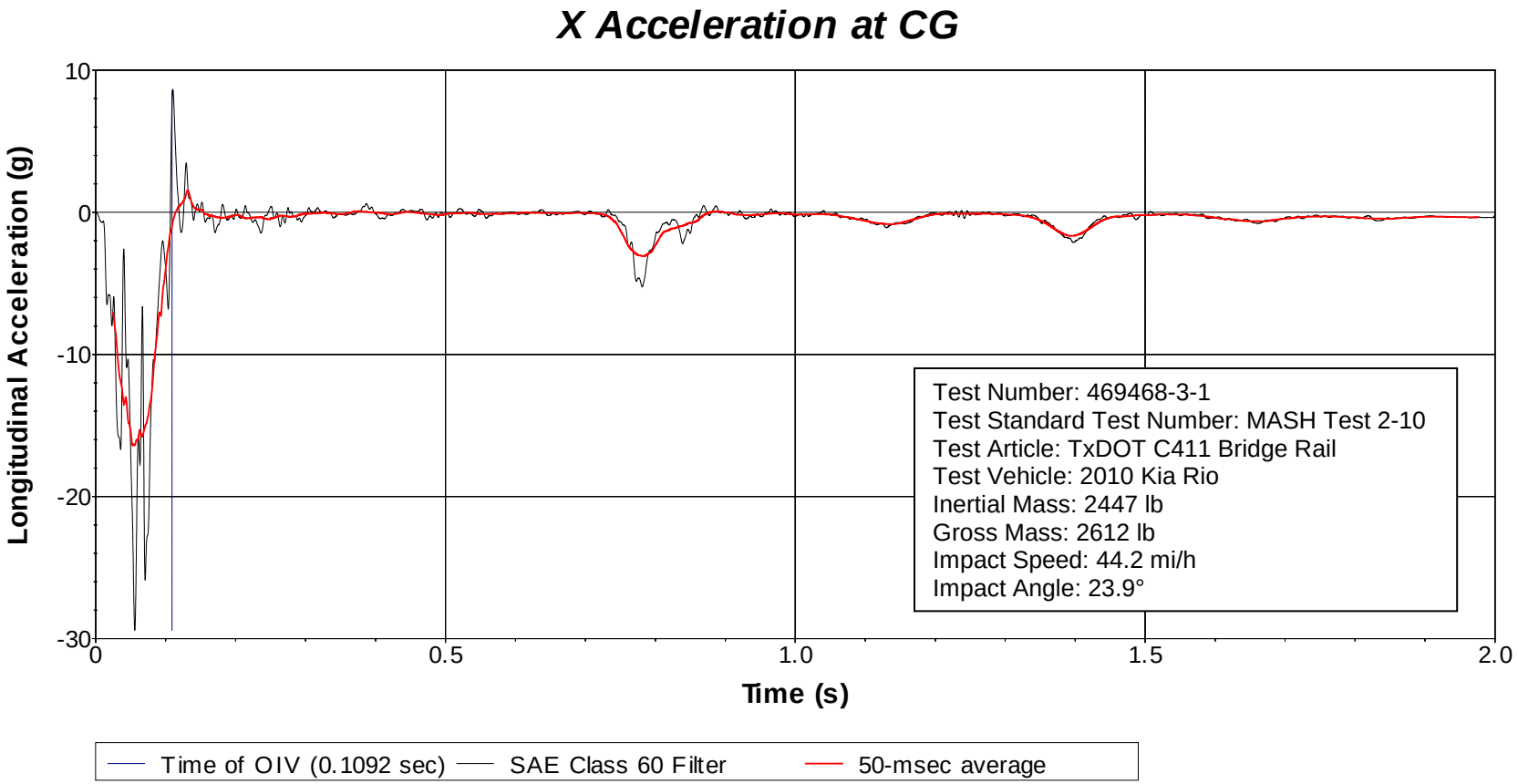

Figure C.4. Vehicle Longitudinal Accelerometer Trace for Test No. 469468-3-1 (Accelerometer Located at Center of Gravity).

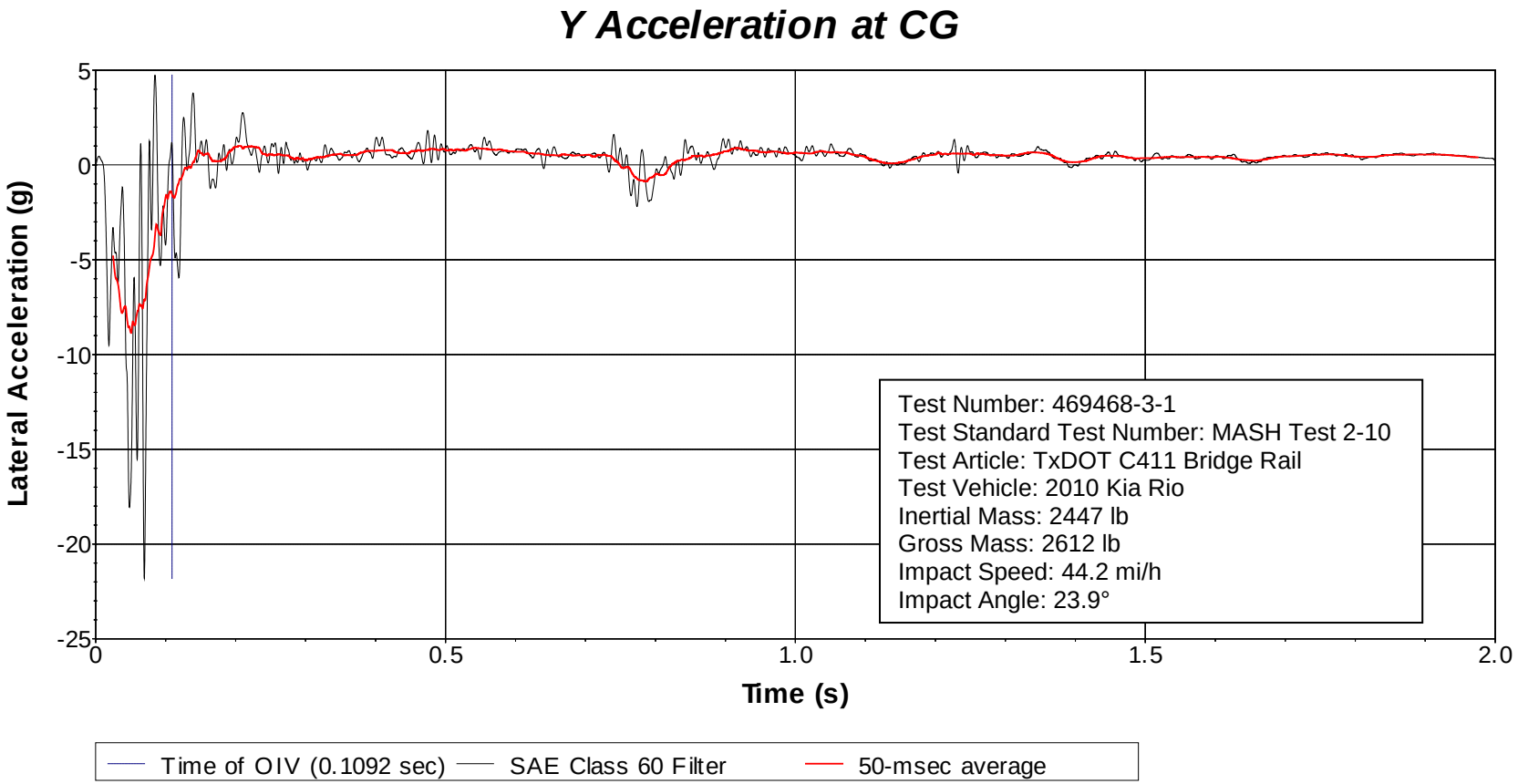

Figure C.5. Vehicle Lateral Accelerometer Trace for Test No. 469468-3-1 (Accelerometer Located at Center of Gravity).

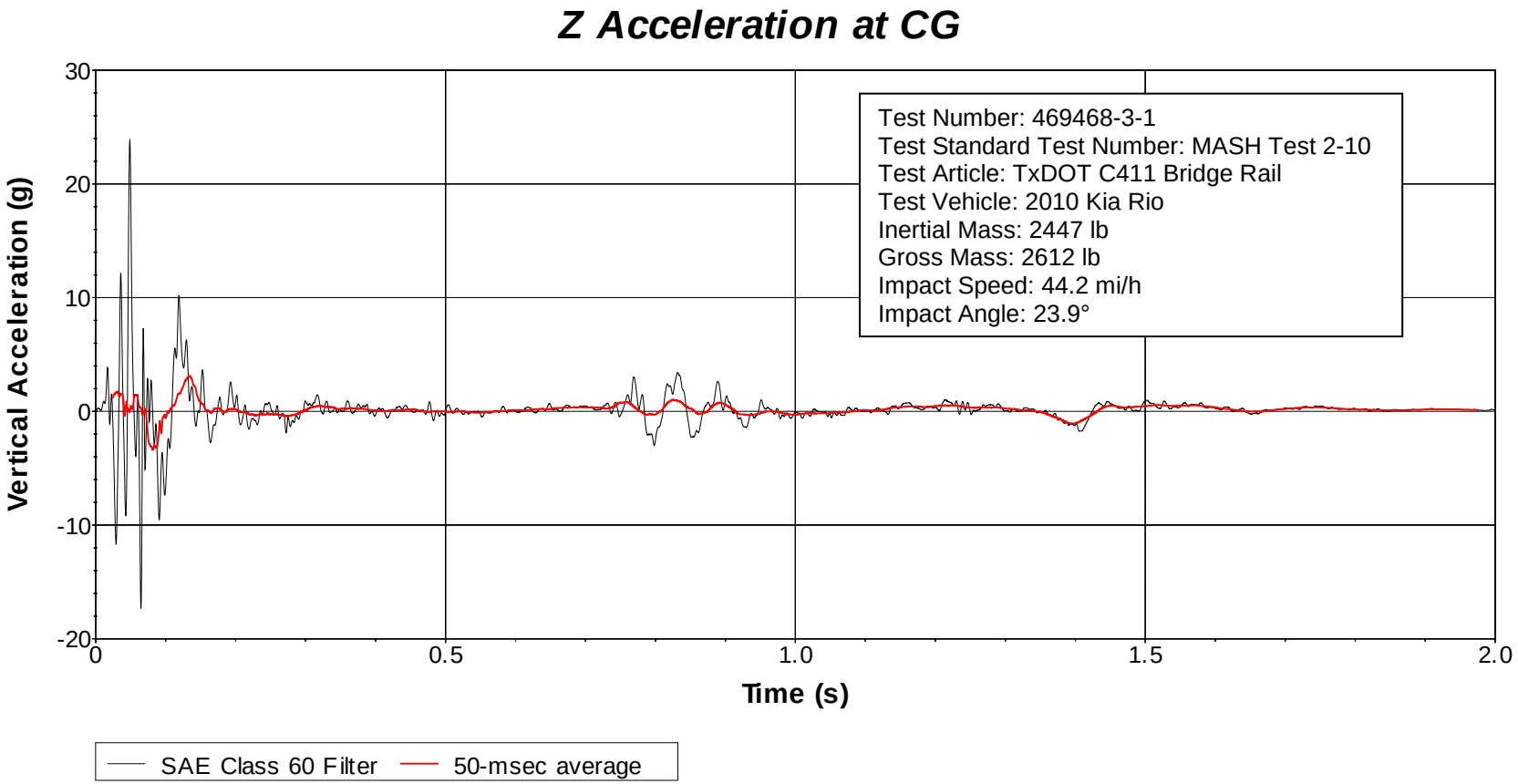

Figure C.6. Vehicle Vertical Accelerometer Trace for Test No. 469468-3-1 (Accelerometer Located at Center of Gravity).

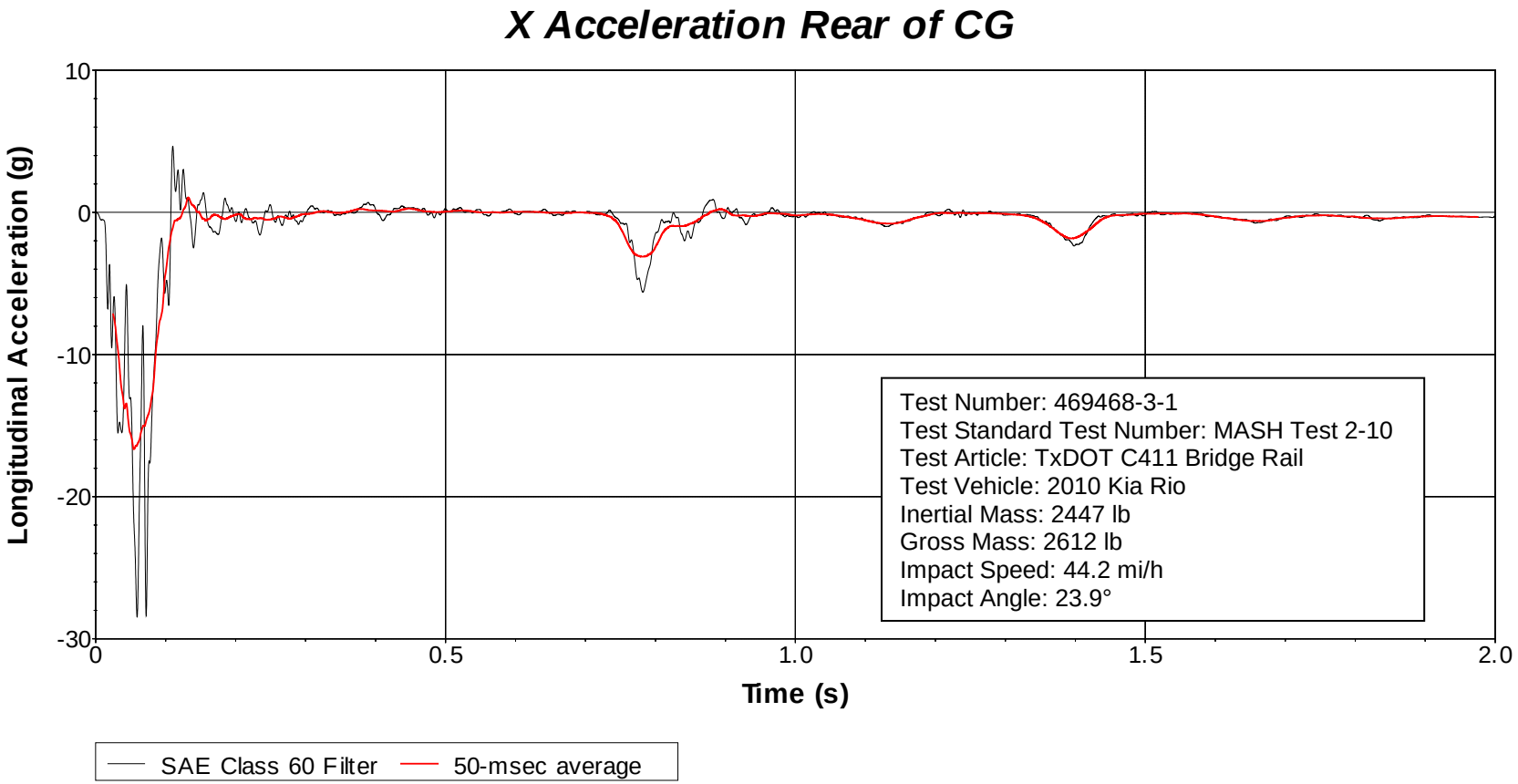

Figure C.7. Vehicle Longitudinal Accelerometer Trace for Test No. 469468-3-1 (Accelerometer Located Rear of Center of Gravity).

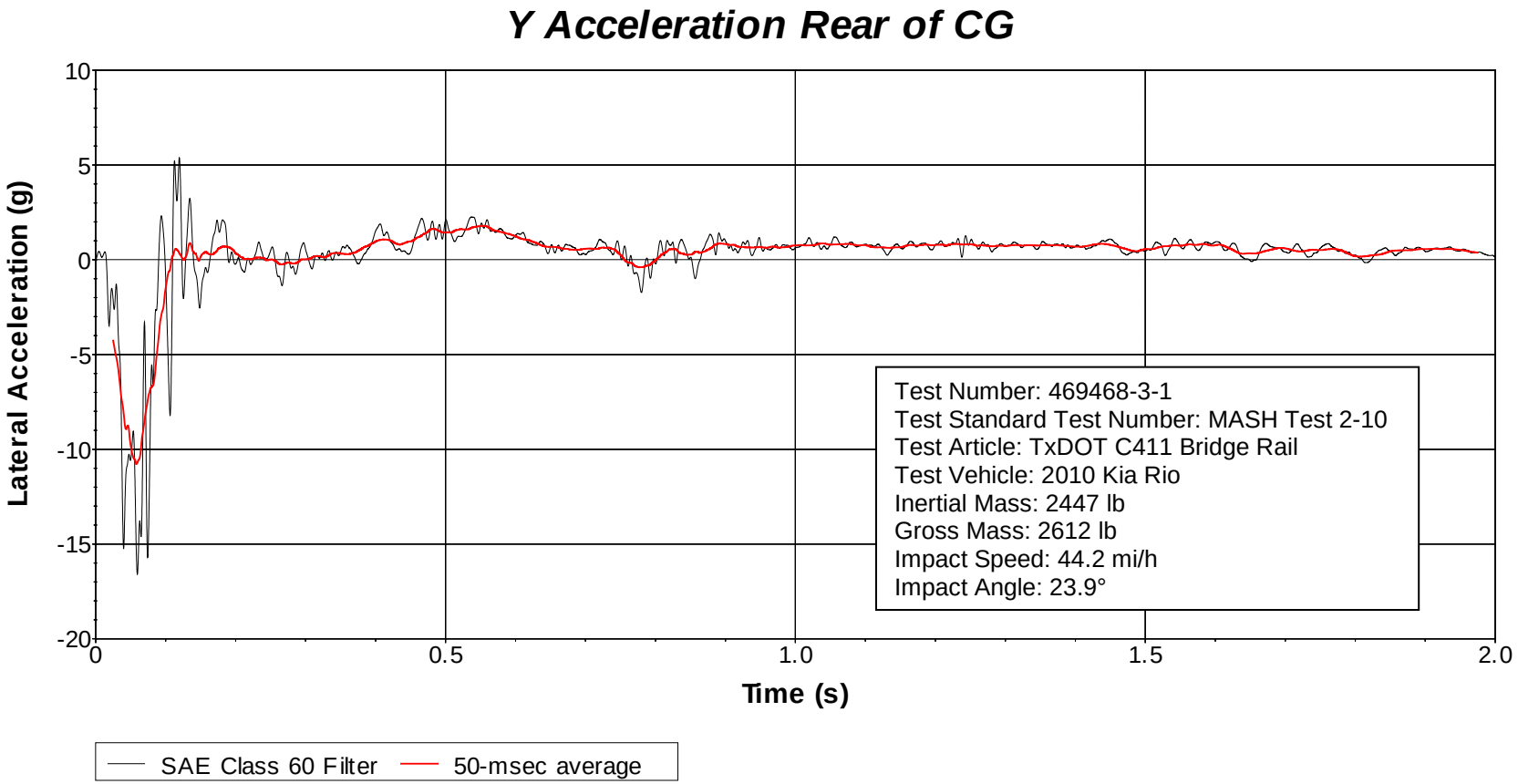

Figure C.8. Vehicle Lateral Accelerometer Trace for Test No. 469468-3-1 (Accelerometer Located Rear of Center of Gravity).

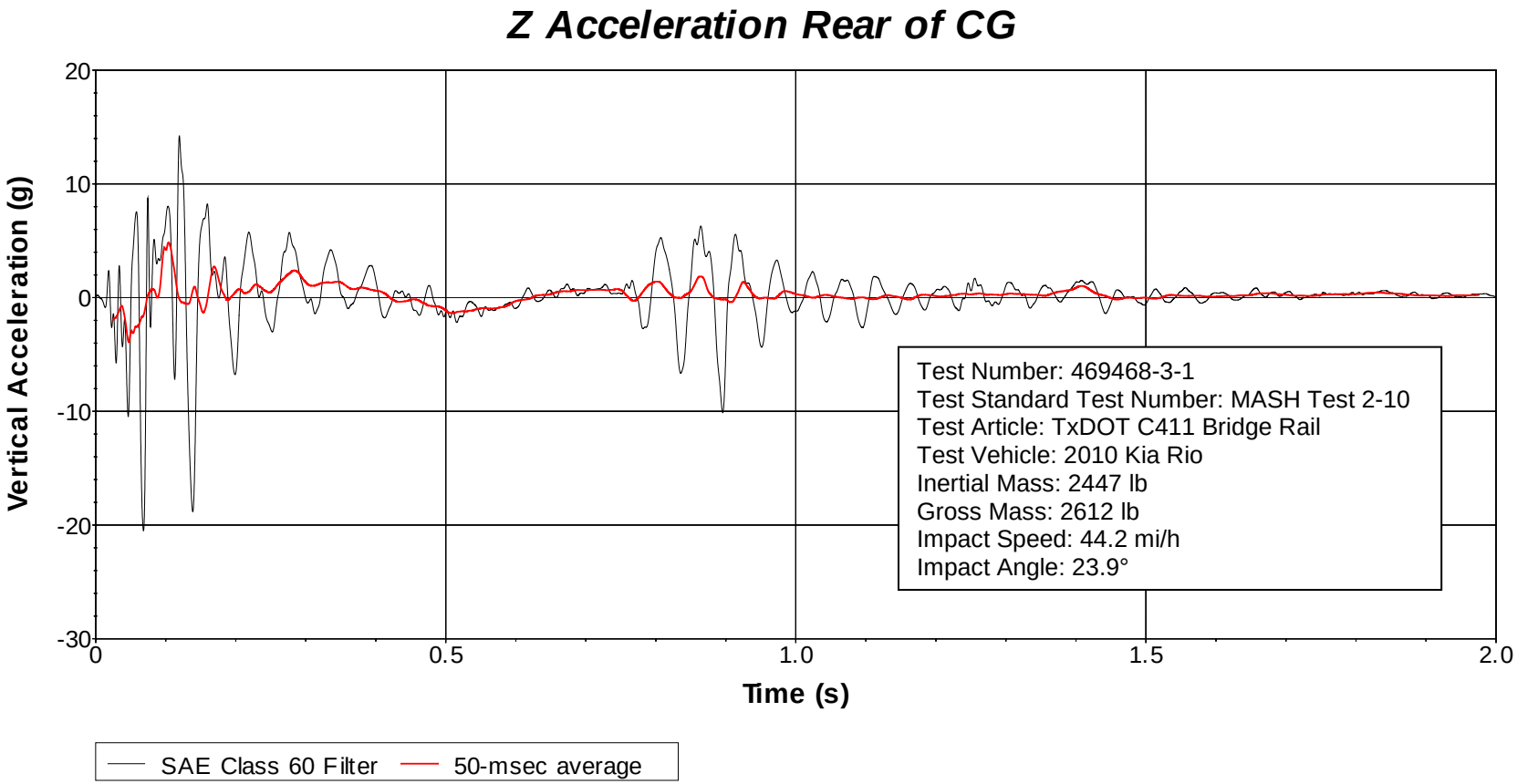

Figure C.9. Vehicle Vertical Accelerometer Trace for Test No. 469468-3-1 (Accelerometer Located Rear of Center of Gravity).

C.4 *MASH* TEST 2-11 (CRASH TEST NO. 469468-3-2)

C.4.1 Vehicle Properties and Information

Table C.4. Vehicle Properties for Test No. 469468-3-2.

Date: 2018-05-22 Test No.: 469468-3-2 VIN No.: 1C6RR6FPODS500861

Year: 2013 Make: RAM Model: 1500

Tire Size: 265/70 R 17 Tire Inflation Pressure: 35 PSI

Tread Type: HIGHWAY Odometer: 173096

Note any damage to the vehicle prior to test: NONE

• Denotes accelerometer location.

NOTES:

Engine Type: V-8
Engine CID: 4.7 L

Transmission Type:
☑ Auto or ☐ Manual
☐ FWD ☑ RWD ☐ 4WD

Optional Equipment:
NONE

Dummy Data:
Type: 50 PERCENTILE
Mass: 165 LBS
Seat Position: IMPACT SIDE

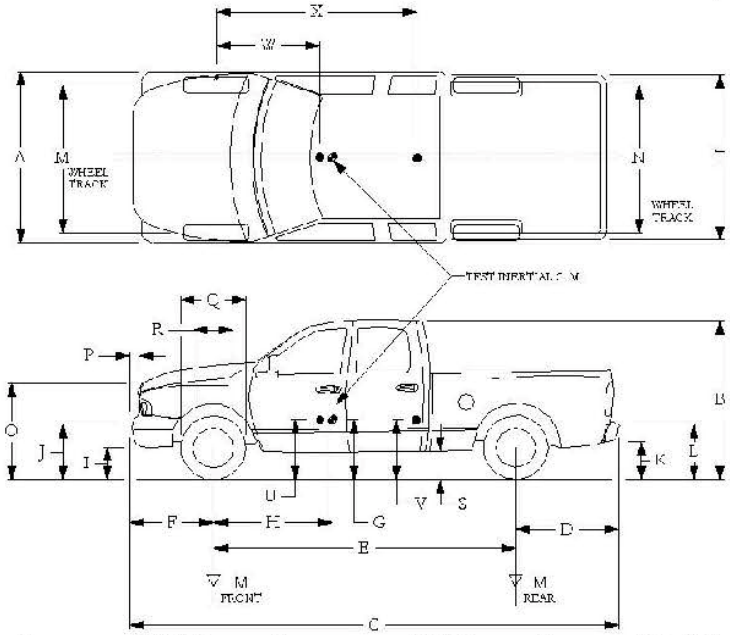

Geometry: inches

A	78.50	F	40.00	K	20.00	P	3.00	U	27.75
B	74.00	G	28.87	L	30.00	Q	30.50	V	30.50
C	227.50	H	62.40	M	68.50	R	18.00	W	62.40
D	44.00	I	11.75	N	68.00	S	13.00	X	77.40
E	140.50	J	27.00	O	46.00	T	77.00		

Wheel Center Height Front	14.75	Wheel Well Clearance (Front)	6.00	Bottom Frame Height - Front	12.00
Wheel Center Height Rear	14.75	Wheel Well Clearance (Rear)	9.25	Bottom Frame Height - Rear	25.50

RANGE LIMIT: A=78 ±2 inches; C=237 ±13 inches; E=148 ±12 inches; F=39 ±3 inches; G = > 28 inches; H = 63 ±4 inches; O=43 ±4 inches; M+N/2=67 ±1.5 inches

GVWR Ratings:		**Mass:** lb	Curb	Test Inertial	Gross Static
Front	3700	M_{front}	2850	2785	2870
Back	3900	M_{rear}	2106	2227	2307
Total	6700	M_{Total}	4956	5012	5177

(Allowable Range for TIM and GSM = 5000 lb ±110 lb)

Mass Distribution:
lb LF: 1361 RF: 1424 LR: 1126 RR: 1101

Table C.5. Measurements of Vehicle Vertical CG for Test No. 469468-3-2.

Date: 2018-05-22 Test No.: 469468-3-2 VIN: 1C6RR6FPODS500861

Year: 2013 Make: RAM Model: 1500

Body Style: QUAD CAB Mileage: 173096

Engine: 4.7L V-8 Transmission: AUTO

Fuel Level: EMPTY Ballast: 133 LBS (440 lb max)

Tire Pressure: Front: 35 psi Rear: 35 psi Size: 265/70 R 17

Measured Vehicle Weights: (lb)								
LF:	1361	RF:	1424	Front Axle:	2785			
LR:	1126	RR:	1101	Rear Axle:	2227			
Left:	2487	Right:	2525	Total:	5012			
					5000 ±110 lb allowed			
Wheel Base:	140.50 inches			Track: F:	68.50 inches	R:	68.00	inches
	148 ±12 inches allowed				Track = (F+R)/2 = 67 ±1.5 inches allowed			
Center of Gravity, SAE J874 Suspension Method								
X:	62.40 inches	Rear of Front Axle		(63 ±4 inches allowed)				
Y:	0.00 inches	Left -	Right +	of Vehicle Centerline				
Z:	28.87 inches	Above Ground		(minumum 28.0 inches allowed)				

Hood Height: 46.00 inches
43 ±4 inches allowed

Front Bumper Height: 27.00 inches

Front Overhang: 40.00 inches
39 ±3 inches allowed

Rear Bumper Height: 30.00 inches

Overall Length: 227.50 inches
237 ±13 inches allowed

Table C.6. Exterior Crush Measurements of Vehicle for Test No. 469468-3-2.

Date: 2018-05-22 Test No.: 469468-3-2 VIN No.: 1C6RR6FPODS500861

Year: 2013 Make: RAM Model: 1500

VEHICLE CRUSH MEASUREMENT SHEET[1]

Complete When Applicable	
End Damage	Side Damage
Undeformed end width _____	Bowing: B1 _____ X1 _____
Corner shift: A1 _____	B2 _____ X2 _____
A2 _____	
End shift at frame (CDC)	Bowing constant
(check one)	$\frac{X1+X2}{2}$ = _____
< 4 inches _____	
≥ 4 inches _____	

Note: Measure C_1 to C_6 from Driver to Passenger Side in Front or Rear impacts – Rear to Front in Side Impacts.

Specific Impact Number	Plane* of C-Measurements	Direct Damage		Field L**	C_1	C_2	C_3	C_4	C_5	C_6	±D
		Width** (CDC)	Max*** Crush								
1	AT FT BUMPER	22	10	52	2	5	7	8	9	10	+10
2	ABOVE FT BUMPER	22	12	45	3	4.5	6.5	9	11	12	+70
	inches										

[1]Table taken from National Accident Sampling System (NASS).

*Identify the plane at which the C-measurements are taken (e.g., at bumper, above bumper, at sill, above sill, at beltline, etc.) or label adjustments (e.g., free space).

Free space value is defined as the distance between the baseline and the original body contour taken at the individual C locations. This may include the following: bumper lead, bumper taper, side protrusion, side taper, etc. Record the value for each C-measurement and maximum crush.

**Measure and document on the vehicle diagram the beginning or end of the direct damage width and field L (e.g., side damage with respect to undamaged axle).

***Measure and document on the vehicle diagram the location of the maximum crush.

Note: Use as many lines/columns as necessary to describe each damage profile.

Table C.7. Occupant Compartment Measurements of Vehicle for Test No. 469468-3-2.

Date:	2018-05-22	Test No.:	469468-3-2	VIN No.:	1C6RR6FPODS500861
Year:	2013	Make:	RAM	Model:	1500

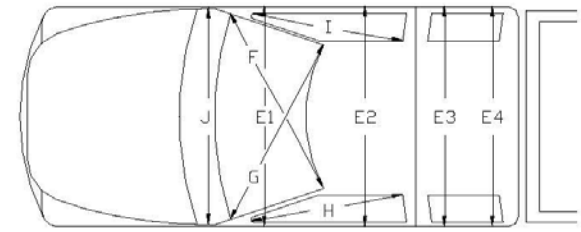

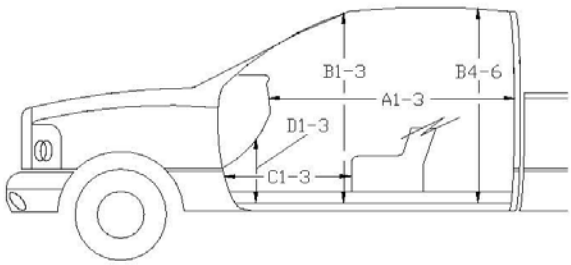

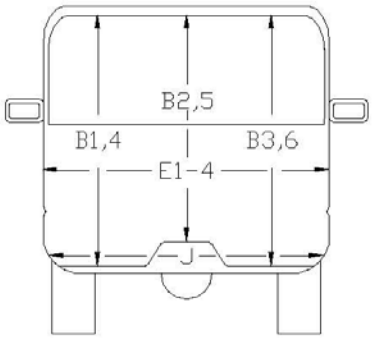

*Lateral area across the cab from driver's side kickpanel to passenger's side kickpanel.

OCCUPANT COMPARTMENT DEFORMATION MEASUREMENT

	Before	After (inches)	Differ.
A1	65.00	65.00	0.00
A2	63.00	63.00	0.00
A3	65.50	65.50	0.00
B1	45.00	45.00	0.00
B2	38.00	38.00	0.00
B3	45.00	45.00	0.00
B4	39.50	39.50	0.00
B5	43.00	43.00	0.00
B6	39.50	39.50	0.00
C1	26.00	26.00	0.00
C2	0.00	0.00	0.00
C3	26.00	22.00	-4.00
D1	11.00	11.00	0.00
D2	0.00	0.00	0.00
D3	11.50	11.00	-0.50
E1	58.50	58.50	0.00
E2	63.50	64.50	1.00
E3	63.50	63.50	0.00
E4	63.50	63.50	0.00
F	59.00	59.00	0.00
G	59.00	59.00	0.00
H	37.50	37.50	0.00
I	37.50	37.50	0.00
J*	25.00	24.75	-0.25

C.4.2 Sequential Photographs

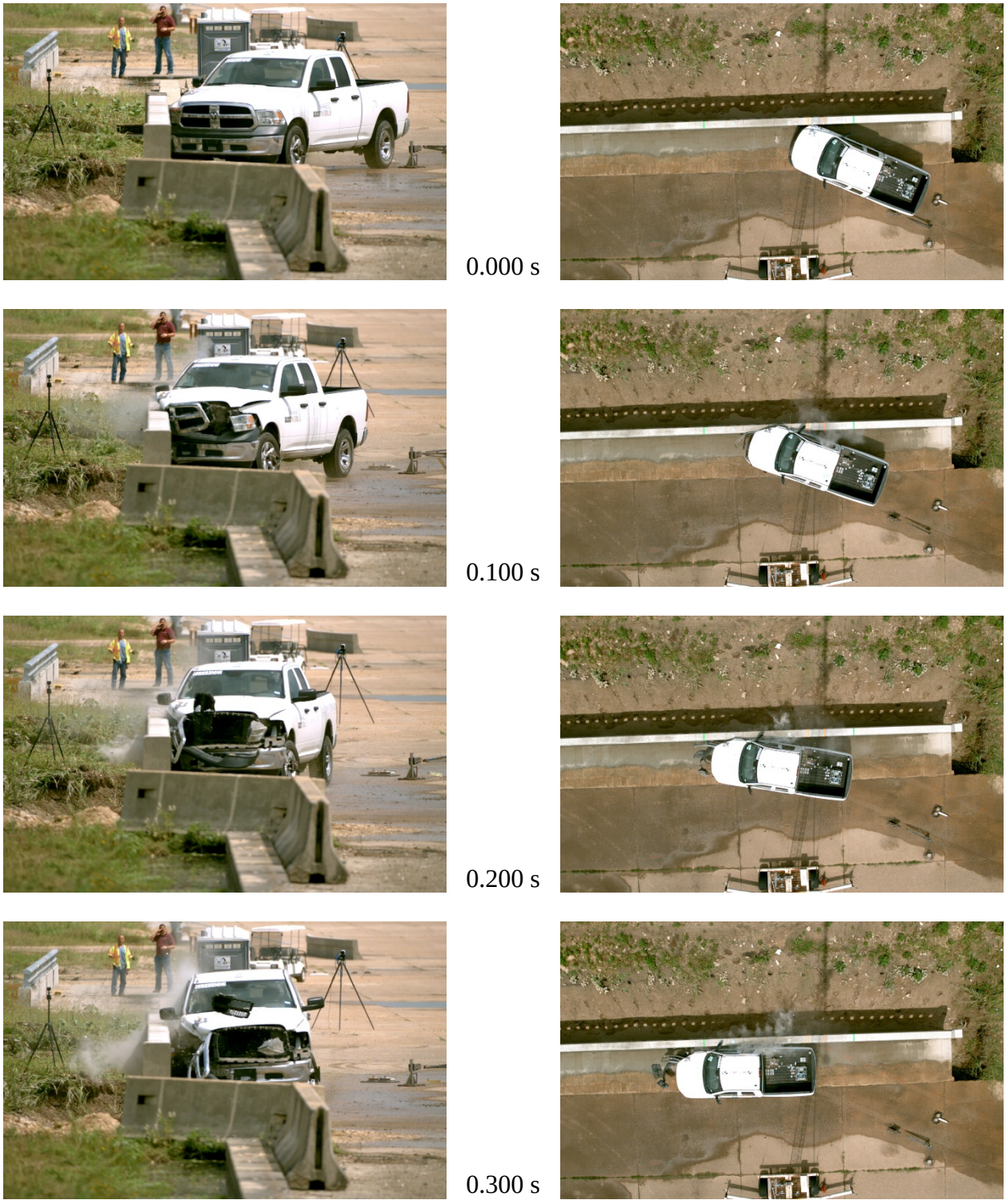

Figure C.10. Sequential Photographs for Test No. 469468-3-2 (Gut and Overhead Views).

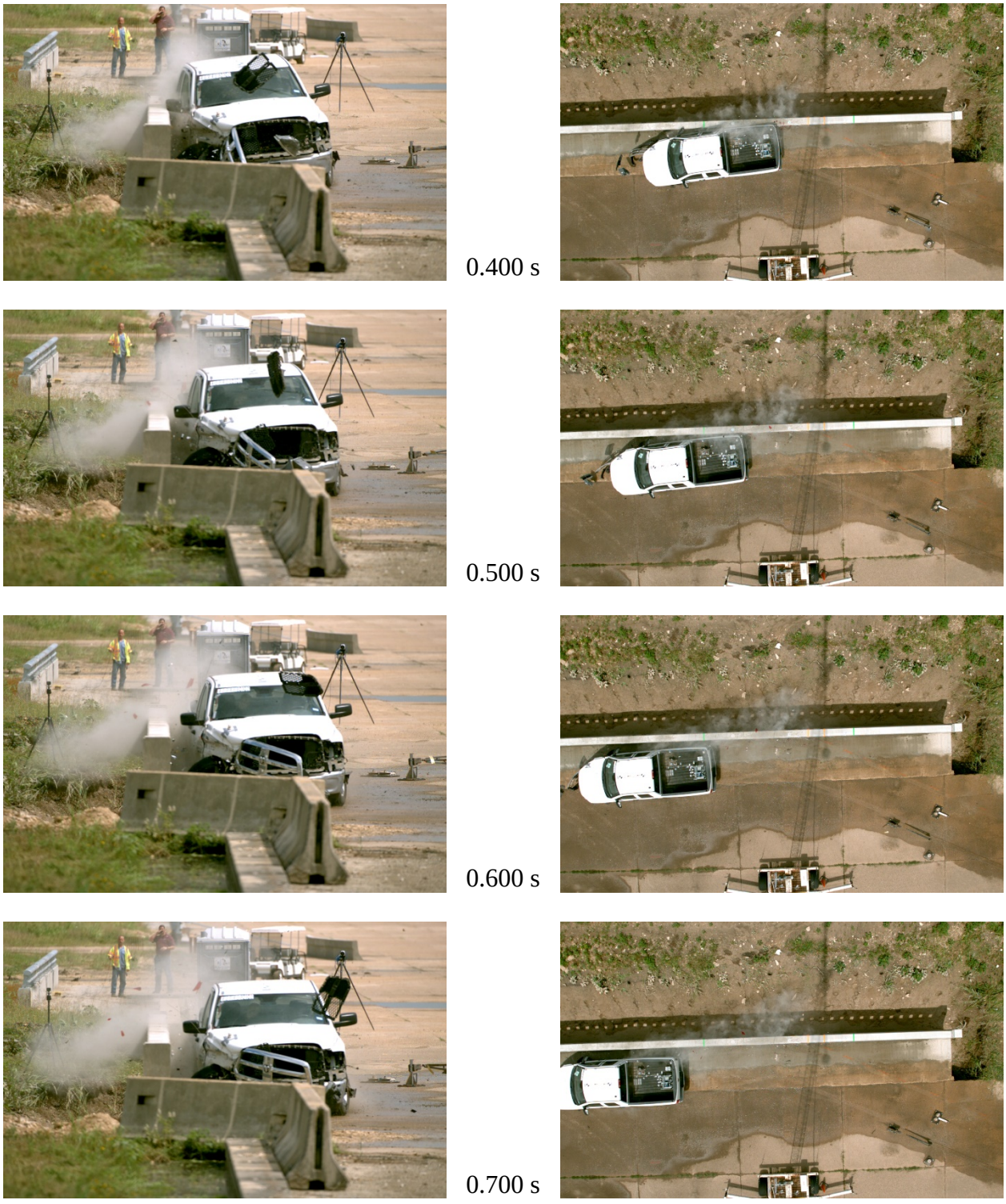

Figure C.10. Sequential Photographs for Test No. 469468-3-2 (Gut and Overhead Views) (Continued).


0.000 s


0.100 s


0.200 s


0.300s


0.400 s


0.500 s


0.600 s


0.700 s

Figure C.11. Sequential Photographs for Test No. 469468-3-2 (Rear View).

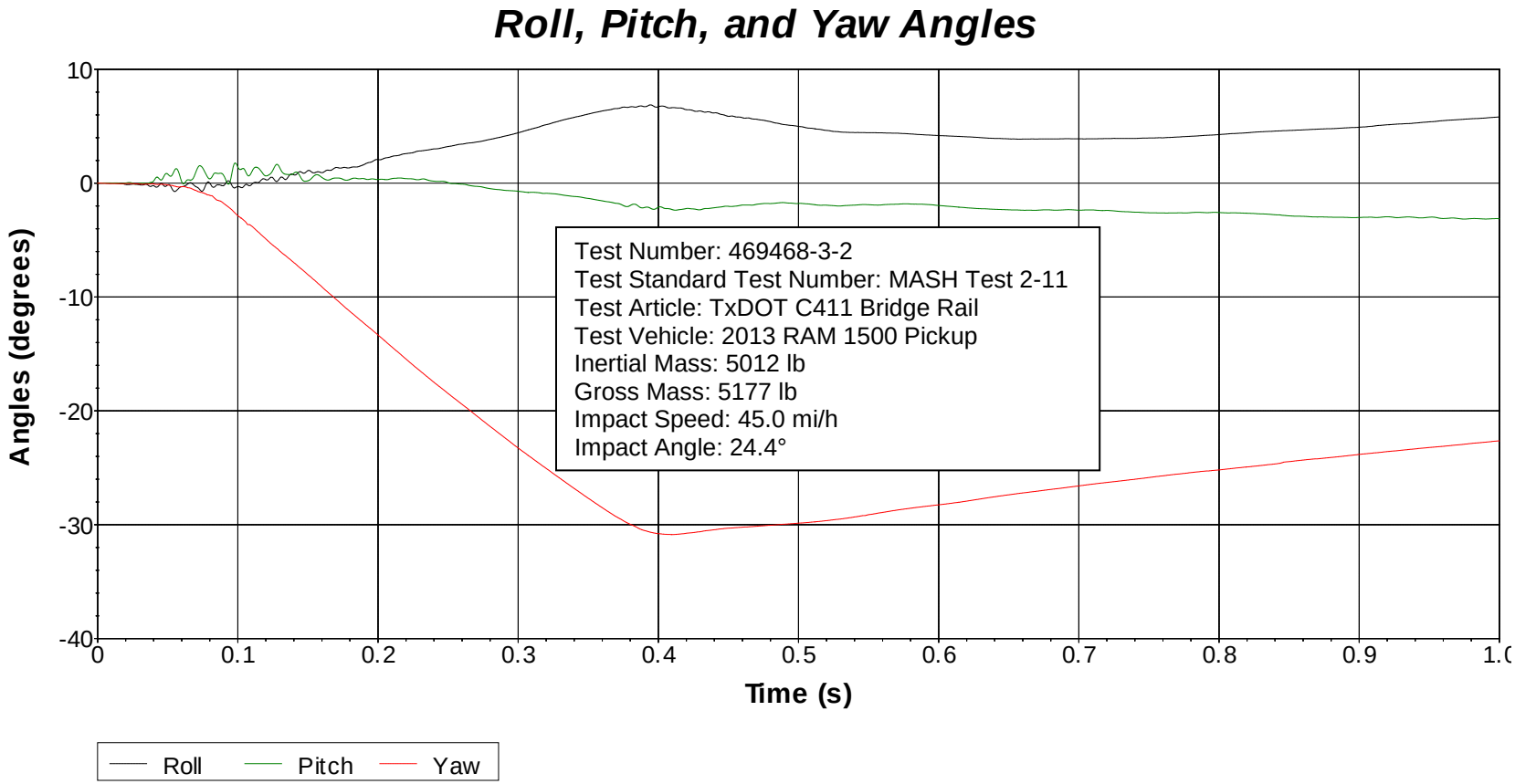

Axes are vehicle-fixed.
Sequence for determining orientation:

1. Yaw.
2. Pitch.
3. Roll.

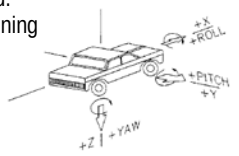

Figure C.12. Vehicle Angular Displacements for Test No. 469468-3-2.

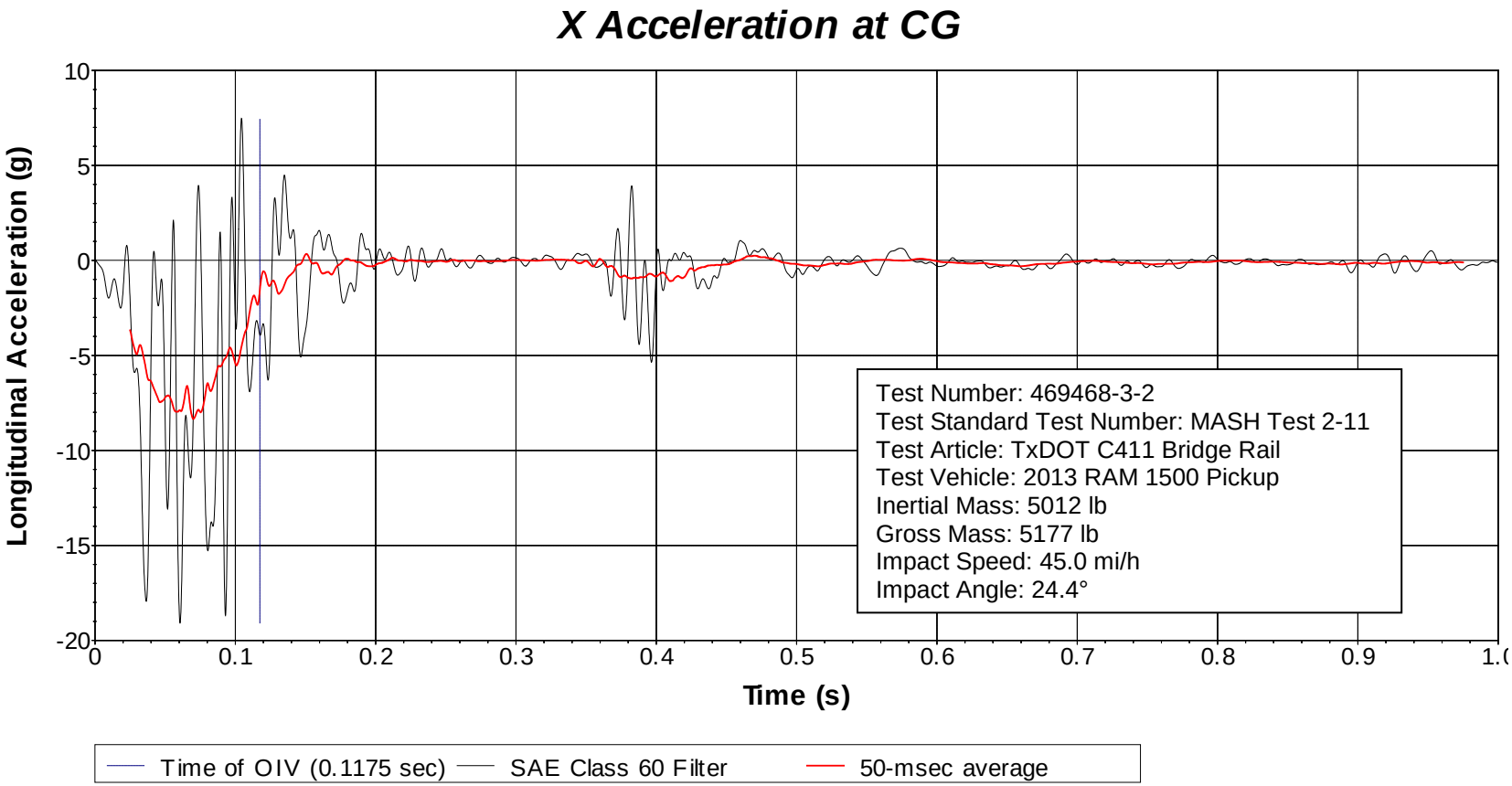

Figure C.13. Vehicle Longitudinal Accelerometer Trace for Test No. 469468-3-2 (Accelerometer Located at Center of Gravity).

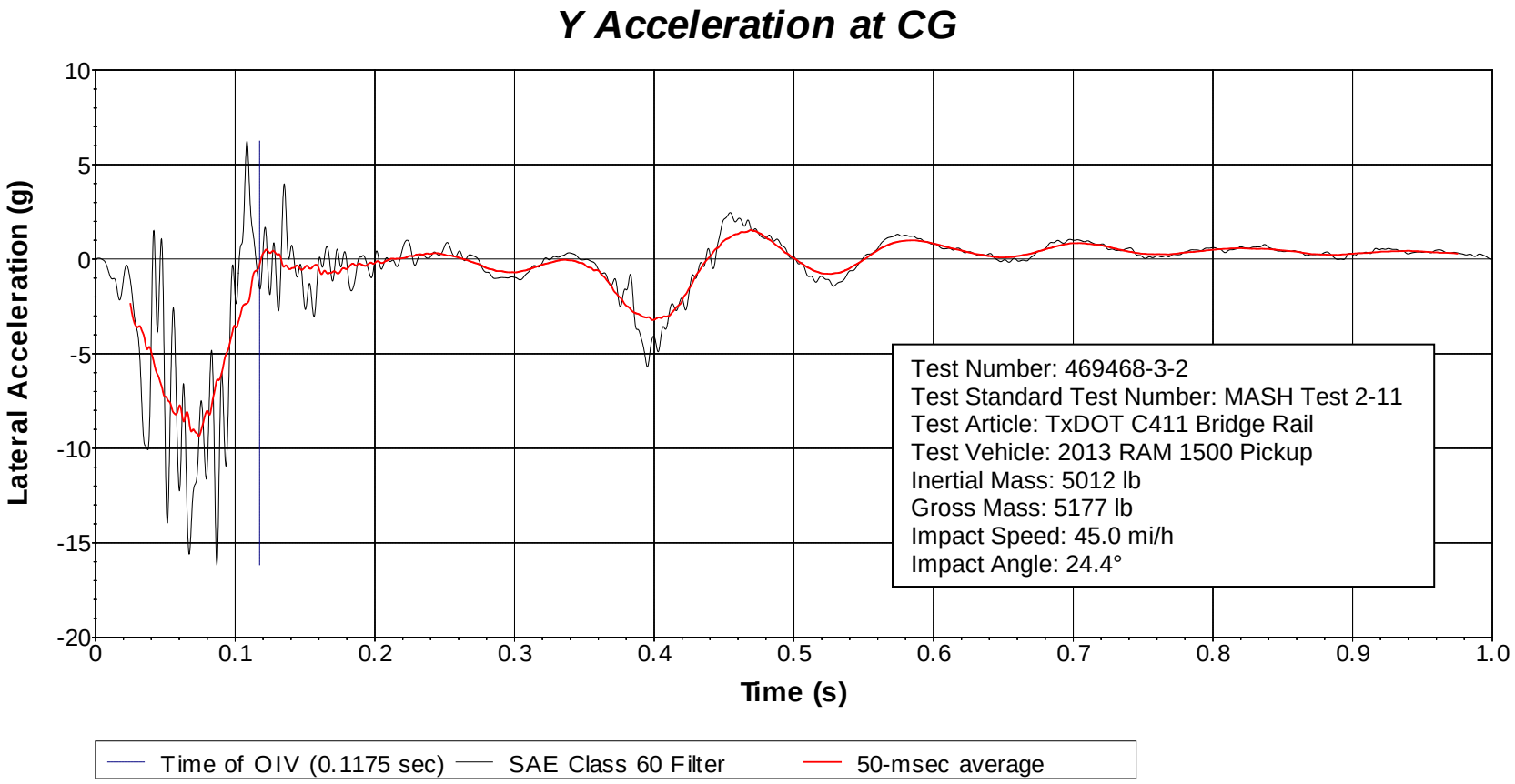

Figure C.14. Vehicle Lateral Accelerometer Trace for Test No. 469468-3-2 (Accelerometer Located at Center of Gravity).

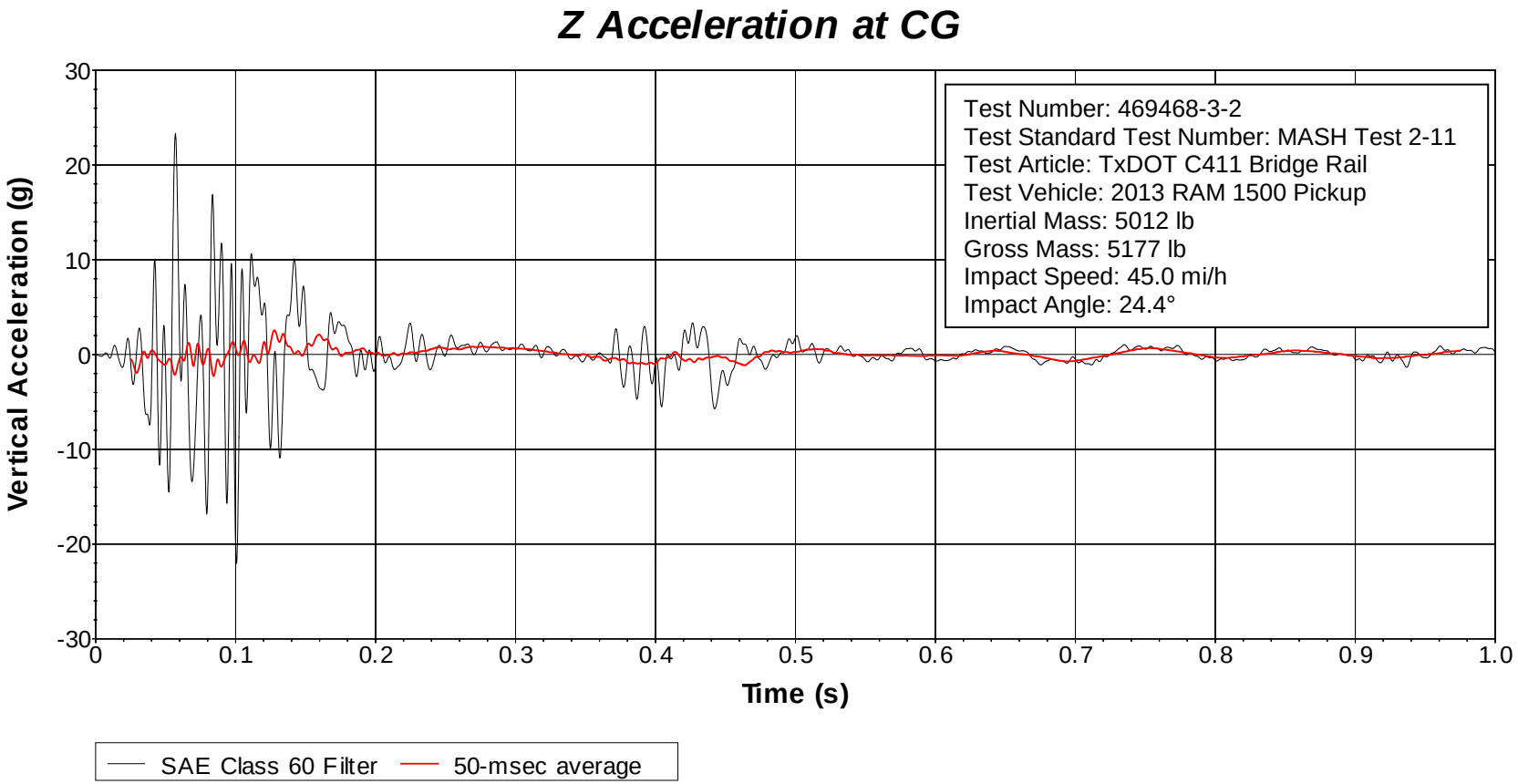

Figure C.15. Vehicle Vertical Accelerometer Trace for Test No. 469468-3-2 (Accelerometer Located at Center of Gravity).

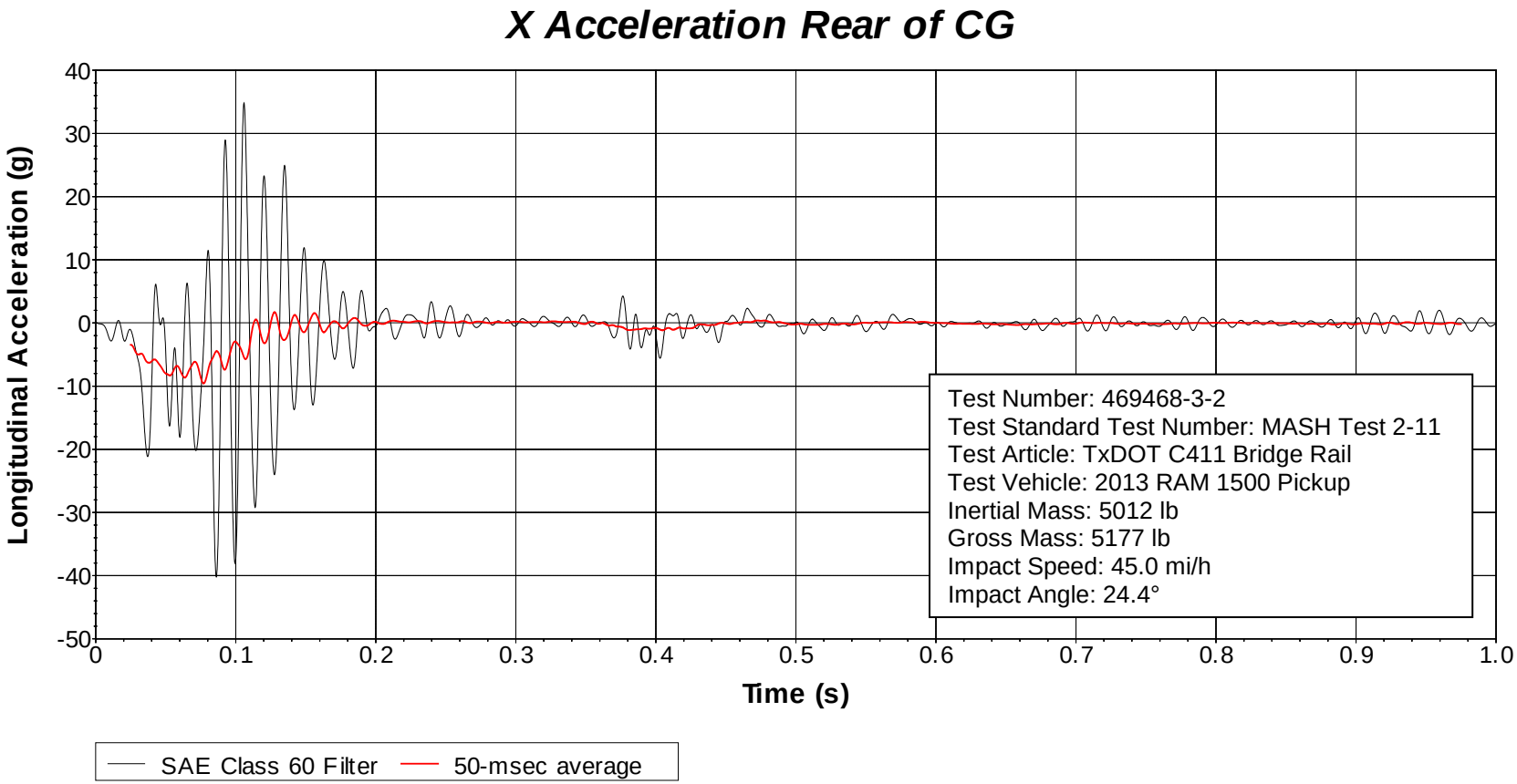

Figure C.16. Vehicle Longitudinal Accelerometer Trace for Test No. 469468-3-2 (Accelerometer Located Rear of Center of Gravity).

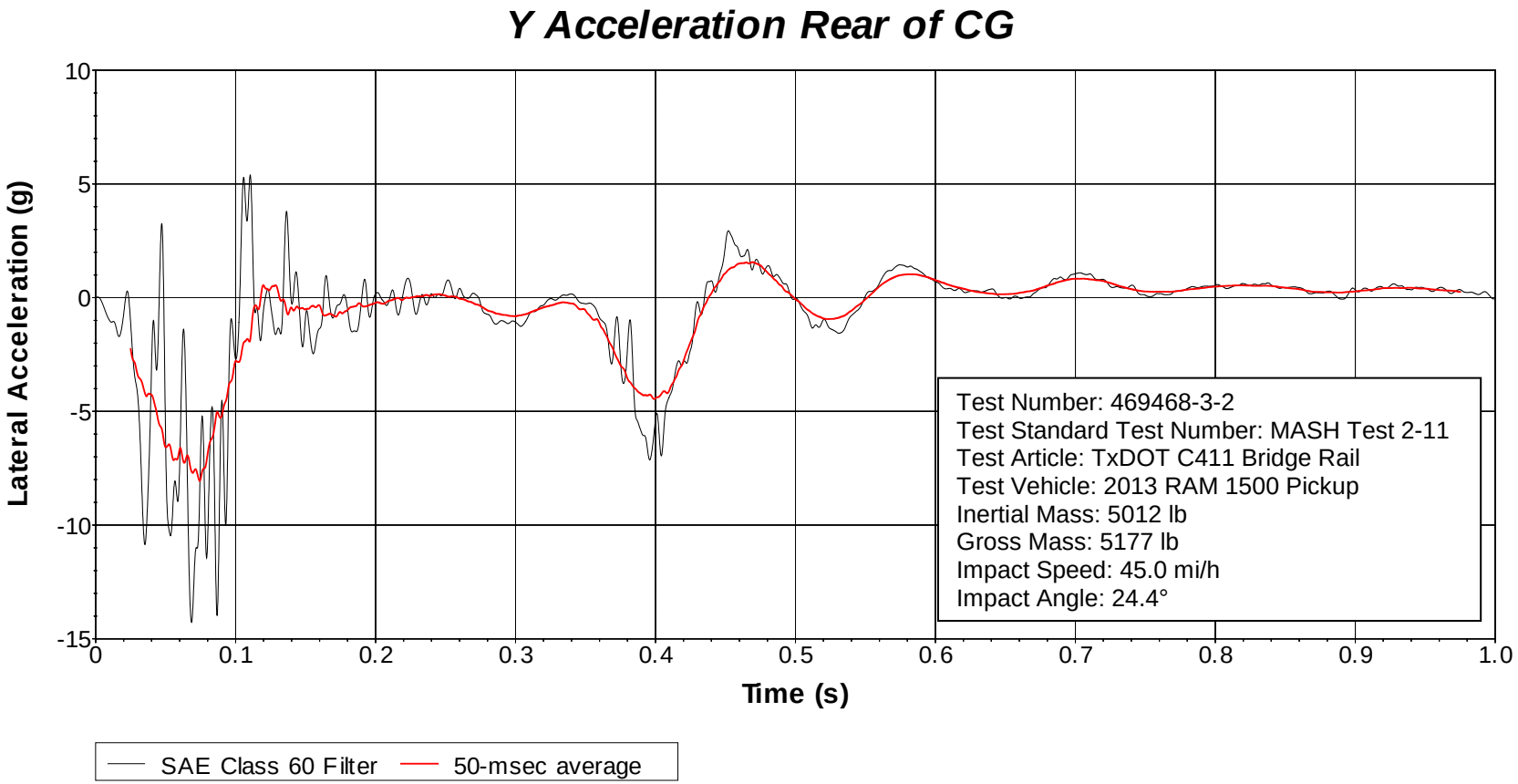

Figure C.17. Vehicle Lateral Accelerometer Trace for Test No. 469468-3-2 (Accelerometer Located Rear of Center of Gravity).

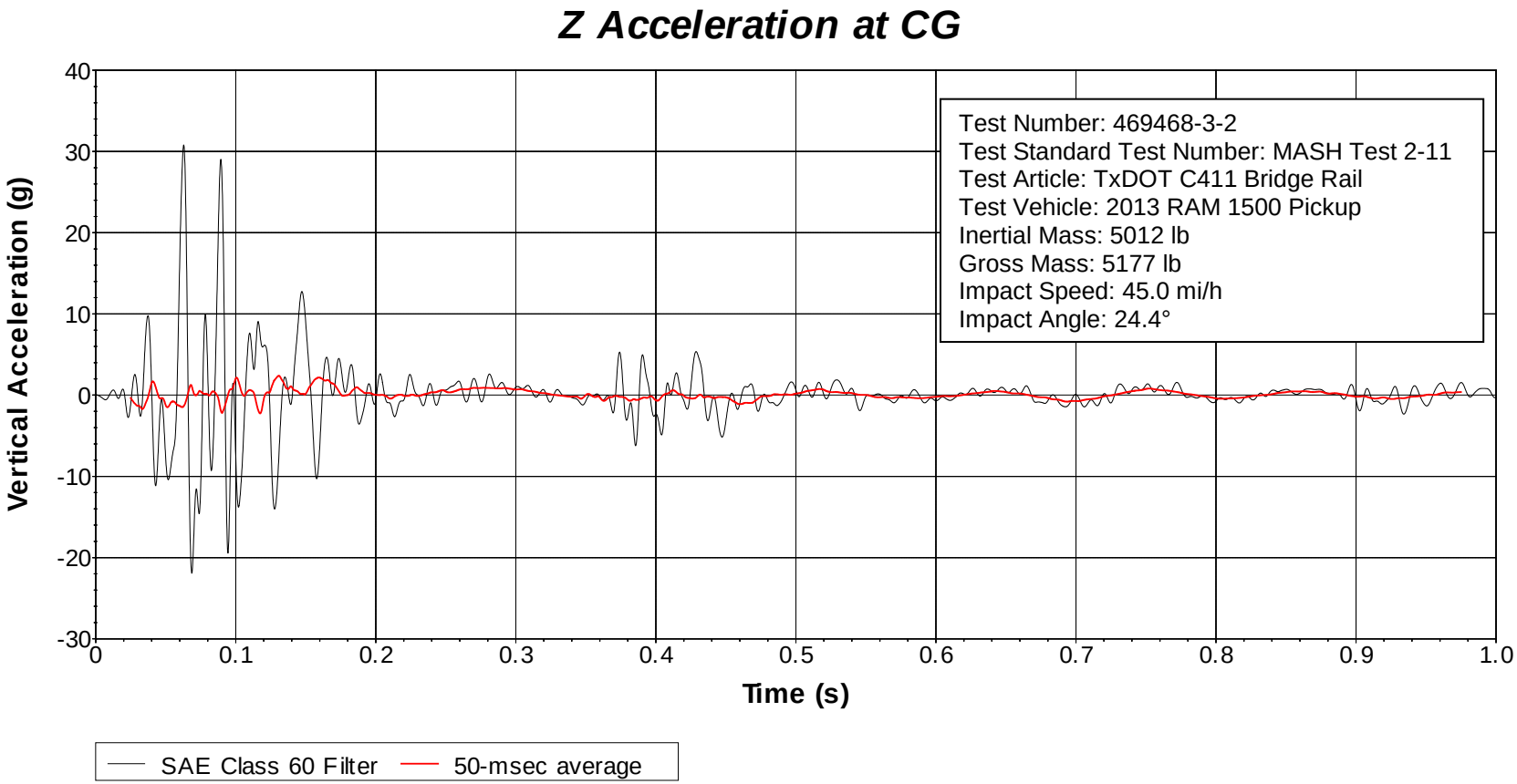

Figure C.18. Vehicle Vertical Accelerometer Trace for Test No. 469468-3-2 (Accelerometer Located Rear of Center of Gravity).

APPENDIX D. TXDOT T1W BRIDGE RAIL

D.1 DETAILS OF TXDOT T1W BRIDGE RAIL

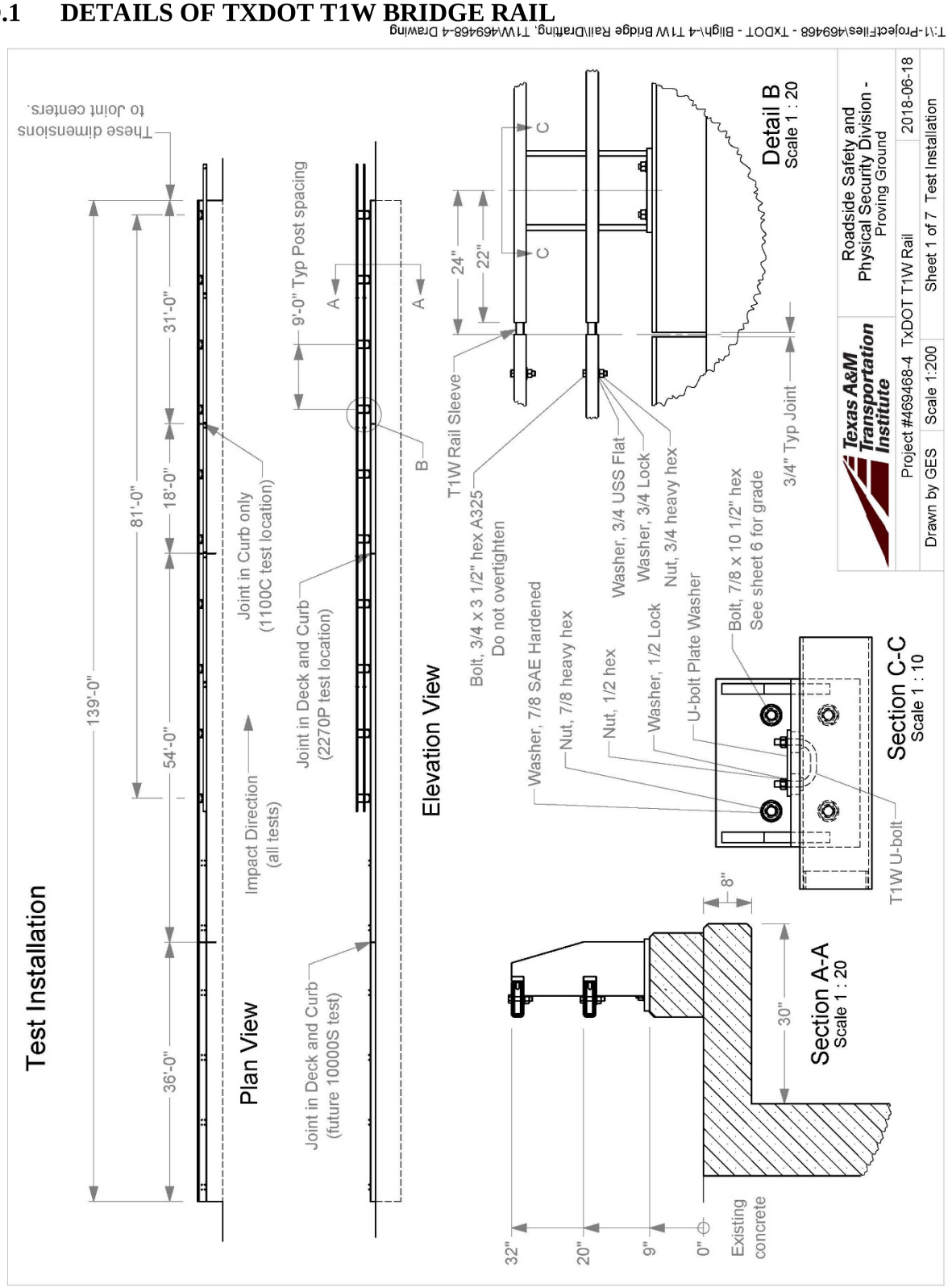

Post Details
14"
13-5/8"
11"
3"
3/8"
0"
3/8
0"
1/2"
4-5/8"
9-3/8"
12"
Plan View
∅1-1/8" Typ x 4
9"
5-1/2"
3-1/4"
0"
3-1/2"
1"
0"
2"
1/4
1/4
1/4
1/4
12"
14-1/8"
10-1/8"
22-1/8"
Bar Plate (2)
Plate, 2" x 3/4" x 14"
ASTM A36 Steel
Slots, 15/16" x 1-3/4"
Side Plate
Plate, 9" x 7/8" x 22 1/8"
ASTM A572 Grade 50
Isometric View
Base Plate
Plate, 12" x 7/8" x 14"
ASTM A572 Grade 50
3/8
Typ
Isometric Views
Texas A&M Transportation Institute
Roadside Safety and Physical Security Division - Proving Ground
Project #469468-4 TxDOT T1W Rail
2018-06-18
Drawn by GES
Scale 1:7
Sheet 2 of 7 Post Details
T:\1-ProjectFiles\469468 - TxDOT - Bligh\-4 T1W Bridge Rail\Drafting, T1W469468-4 Drawing

Assorted Parts
6-1/2"
5-5/8"
4-1/2"
2"
7/8"
0"
0"
1-1/2"
3"
8"
9-1/2"
11"
∅15/16" Typ x 4
T1W Anchor Plate
Plate, 6 1/2" x 1/4" x 11"
ASTM A36 Steel
3-1/2"
R1"
2" Threads
0"
∅1/2"
3"
T1W U-bolt
ASTM A36 Rod
5-1/2"
4-1/2"
1"
0"
∅9/16" Typ x 2
U-bolt Plate Washer
Plate, 2" x 5/16" x 5 1/2"
ASTM A36 Steel
Texas A&M Transportation Institute
Roadside Safety and Physical Security Division - Proving Ground
Project #469468-4 TxDOT T1W Rail
2018-06-18
Drawn by GES
Scale 1:2
Sheet 3 of 7 Assorted Parts
T:\1-ProjectFiles\469468 - TxDOT - Bligh\-4 T1W Bridge Rail\Drafting, T1W\469468-4 Drawing

Rail and Sleeve Details

4a. ASTM A-1085 is an acceptable substitute. Contractor shall specify which grade was used, and shall provide material certs for all steel components, including hardware.

Texas A&M Transportation Institute	Roadside Safety and Physical Security Division - Proving Ground	
Project #469468-4 TxDOT T1W Rail		2018-06-18
Drawn by GES	Scale 1:20	Sheet 4 of 7 Rail and Sleeve Details

T:\1-ProjectFiles\469468 - TxDOT - Bligh\4 T1W Bridge Rail\Drafting, T1W\469468-4 Drawing

Concrete Details

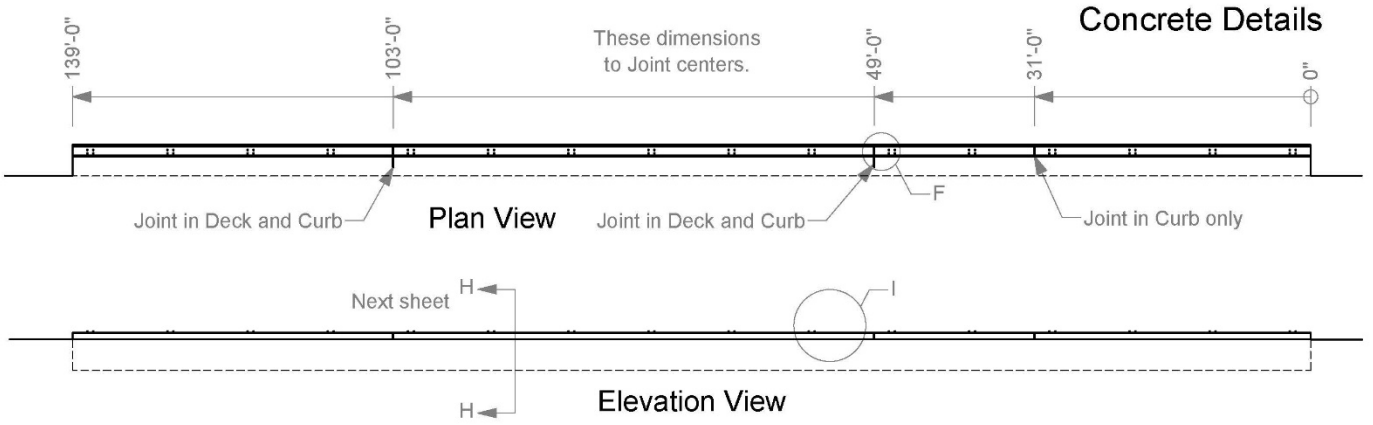

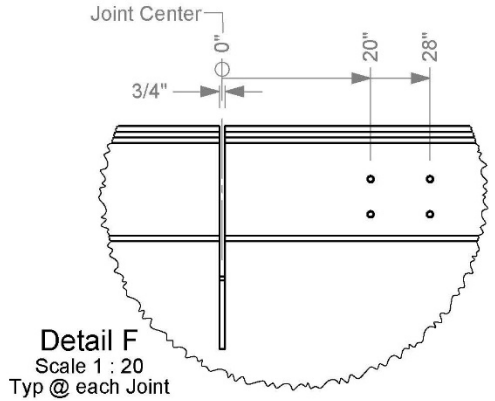

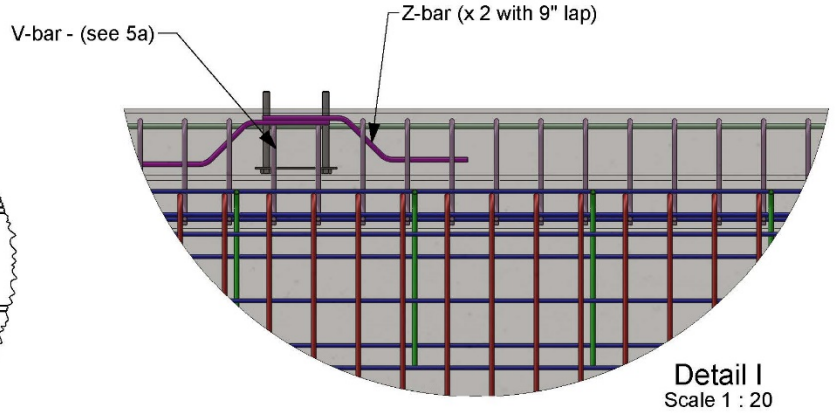

5a. Place two V-bars centered at each Post location spaced @ 6" as shown. 6" spacing is typical for all V-bars.

Texas A&M Transportation Institute		Roadside Safety and Physical Security Division - Proving Ground	
Project #469468-4 TxDOT T1W Rail			2018-06-18
Drawn by GES	Scale 1:200	Sheet 5 of 7 Concrete Details	

T:\1-ProjectFiles\469468 - TxDOT - Bligh\4 T1W Bridge Rail\Drafting, T1W469468-4 Drawing

6a. Secure each Tie Bar to existing rebar (not shown here) protruding from the runway with a minimum 3" weld. Maximum spacing is 18".

6b. All rebar is grade 60, and contractor shall provide material certs. Minimum rebar lap is 19" for **#4** bars and 24" for **#5** bars.

6c. All rebar dimensions are to center of bar unless otherwise indicated by "cvr" (cover).

6d. Chamfer top edges of Curb and field side edges of Deck 3/4" each way as shown.

6e. Concrete shall be TxDOT Class S (4000psi).

Texas A&M Transportation Institute	Roadside Safety and Physical Security Division - Proving Ground	
Project #469468-4 TxDOT T1W Rail		2018-06-18
Drawn by GES	Scale 1:10	Sheet 6 of 7 Section View

T:\1-ProjectFiles\469468 - TxDOT - Bligh\4 T1W Bridge Rail\Drafting, T1W469468-4 Drawing

31"
∅3"
Bottom Transverse L
31"
∅1/2"
37"
∅3-3/4"
Top Transverse L
37"
∅5/8"
7"
∅3-3/4"
Tie Bar
24"
∅5/8"
11"
∅3-3/4" Typ
13-3/4"
14-1/4"
10"
∅5/8"
V-bar
11" Typ
∅3-3/4" Typ
∅5/8"
45.0°
6-1/4"
Z-bar
Texas A&M Transportation Institute
Roadside Safety and Physical Security Division - Proving Ground
Project #469468-4 TxDOT T1W Rail
2018-06-18
Drawn by GES
Scale 1:10
Sheet 7 of 7 Rebar Details
T:\1-ProjectFiles\469468 - TxDOT - Bligh\4 T1W Bridge Rail\Drafting, T1W469468-4 Drawing

D.2 SUPPORTING CERTIFICATION DOCUMENTS

STRAIGHT BILL OF LADING-SHORT FORM
ORIGINAL-NON NEGOTIABLE

72464667

SHIPMENT NO.(BOL) : 72464667	**CARRIER'S NAME:** PBH Priority Express Corp	**SEAL NUMBER :**
DATE AND TIME : 05/15/2018 12:19:00	**TRUCK/UNIT No:**	**TRAILER/RAILCAR No:**
SHIP FROM :	**CMC INCO TERMS:** CPT Bryan	**SOLD TO:** 3007327
CMC Sterling Steel Truck	**SHIP TO:** 3102704	Ellis Mc Ginnis Construction
2001 Brittmoore Road	Texas Traffic Institute T1w Rail -	2895 Eddy Gatesville Pkwy
Houston, TX 77043-2208	3100 State Hwy 47, Bldg. 7091	Eddy, TX 76524-3911
USA	Bryan, TX 77807-0000 USA	USA
Contact Phone No. :713-690-0347	Contact Phone No. :(254)859-5494	Contact Phone No. :2548595494
Fax No. :	Fax No. :(254)859-5497	Fax No. :2548595497

Subject to Section 7: Subject to Section 7 of Conditions of applicable bill of lading, if this shipment is to be delivered to the consignee without recourse on the consignor, the consignor shall sign the following statement. The carrier shall not make delivery of this shipment without payment of freight and all other lawful charges.

Consignor's Signature : _____

BOL INSTRUCTIONS:

NOTES/SPECIAL INSTRUCTIONS: MIKE 254-859-5494

Additional Instructions :

Material Details

Delivery	Cust PO	Ctrl Cd	Rel No.	Release Description	Dwg #	Material Description	PCS	Weight LB
PROJECT: R/1823300809 UP								
3178495	2812	0QXN	1	T1W RAIL		Rebar Black 60/420		5,520
						Total Weight		5,520

MTR'S INCLU

469460-4
T1W

RECEIVED, subject to the classifications in effect on the date of the issue of the Bill of Lading, the property described above, in apparent good order, except as noted (contents of packages unknown), marked, consigned, and destined as indicated below, which said carrier (the word carrier being understood throughout this contract as meaning any person or corporation in possession of the property under the contract) agrees to carry to its usual place of delivery at said destination, if on its route, otherwise to deliver to another carrier on the route to said destination. It is mutually agreed, as to each carrier of all or any said property over all or any said property over all or any portion of said route to destination, and as to each party at any time interested in all or any of said property, that every service to be performed hereunder shall be subject to all the terms and conditions of the Uniform Domestic Straight Bill of Lading set forth (1) in Official, Southern, Western and Illinois Freight Classifications in effect on the date hereof, if this is a rail or a rail-water shipment, or (2) in the applicable motor carrier classification or tariff if this is a motor carrier shipment. Shipper hereby certifies that he is familiar with all the terms and conditions of the said bill of lading, including those on the back thereof, set forth in the classification or tariff which governs the transportation of this shipment and the said terms and conditions are hereby agreed to by the shipper and accepted for himself and his assigns. This is to certify that the above articles are properly describe by name and are packed and marked and are in proper condition for transportation according to regulations by the Interstate Commerce Commission. * If the shipment moves between two ports by a carrier by water, the law requires that the bill of lading shall state whether it is "carrier's or shipper's weight." * Shipper's imprints in lieu of stamp; not a part of Bill of Lading approved by the Interstate Commerce Commission. NOTE: Where the rate is dependent on value, shippers are required to state specifically in writing the agreed or declared value of property. The agreed or declared value of the property is hereby specifically state by the shipper to be not exceeding.

DRIVER'S SIGNATURE/AGENT : _____

NOTICE TO RECEIVERS :Please check each item on this shipping bill carefully. CMC will not be responsible for any exceptions to goods unless notified within twenty four hours and noted on this document.

RECEIVED BY : _____ DATE: _____ TIME: _____,

DELIVERED BY: _____ DATE: _____ TIME IN: _____, TIME OUT _____

Page 1 of 1

STRAIGHT BILL OF LADING-SHORT FORM
ORIGINAL-NON NEGOTIABLE

72464667

SHIPMENT NO.(BOL) : 72464667	**CARRIER'S NAME:** PBH Priority Express Corp	**SEAL NUMBER :**
DATE AND TIME : 05/15/2018 12:19:00	**TRUCK/UNIT No:**	**TRAILER/RAILCAR No:**
SHIP FROM :	**CMC INCO TERMS:** CPT Bryan	**SOLD TO:** 3007327
CMC Sterling Steel Truck	**SHIP TO:** 3102704	Ellis Mc Ginnis Construction
2001 Brittmoore Road	Texas Traffic Institute T1w Rail -	2895 Eddy Gatesville Pkwy
Houston, TX 77043-2208	3100 State Hwy 47, Bldg. 7091	Eddy, TX 76524-3911
USA	Bryan, TX 77807-0000 USA	USA
Contact Phone No. :713-690-0347	Contact Phone No. :(254)859-5494	Contact Phone No. :2548595494
Fax No. :	Fax No. :(254)859-5497	Fax No. :2548595497

Subject to Section 7: Subject to Section 7 of Conditions of applicable bill of lading, if this shipment is to be delivered to the consignee without recourse on the consignor, the consignor shall sign the following statement. The carrier shall not make delivery of this shipment without payment of freight and all other lawful charges.

Consignor's Signature : _____

BOL INSTRUCTIONS:

NOTES/SPECIAL INSTRUCTIONS: MIKE 254-859-5494

Additional Instructions :

Material Details

Delivery	Cust PO	Ctrl Cd	Rel No.	Release Description	Dwg #	Material Description	PCS	Weight LB
PROJECT: R/1823300809 UP								
3178495	2812	0QXN	1	T1W RAIL		Rebar Black 60/420		5,520
						Total Weight		5,520

MTR'S INCLUDED

RECEIVED, subject to the classifications in effect on the date of the issue of the Bill of Lading, the property described above, in apparent good order, except as noted (contents of packages unknown), marked, consigned, and destined as indicated below, which said carrier (the word carrier being understood throughout this contract as meaning any person or corporation in possession of the property under the contract) agrees to carry to its usual place of delivery at said destination, if on its route, otherwise to deliver to another carrier on the route to said destination. It is mutually agreed, as to each carrier of all or any said property over all or any said property over all or any portion of said route to destination, and as to each party at any time interested in all or any of said property, that every service to be performed hereunder shall be subject to all the terms and conditions of the Uniform Domestic Straight Bill of Lading set forth (1) in Official, Southern, Western and Illinois Freight Classifications in effect on the date hereof, if this is a rail or a rail-water shipment, or (2) in the applicable motor carrier classification or tariff if this is a motor carrier shipment. Shipper hereby certifies that he is familiar with all the terms and conditions of the said bill of lading, including those on the back thereof, set forth in the classification or tariff which governs the transportation of this shipment and the said terms and conditions are hereby agreed to by the shipper and accepted for himself and his assigns. This is to certify that the above articles are properly describe by name and are packed and marked and are in proper condition for transportation according to regulations by the Interstate Commerce Commission. * If the shipment moves between two ports by a carrier by water, the law requires that the bill of lading shall state whether it is 'carrier's or shipper's weight.' * Shipper's imprints in lieu of stamp; not a part of Bill of Lading approved by the Interstate Commerce Commission. NOTE: Where the rate is dependent on value, shippers are required to state specifically in writing the agreed or declared value of property. The agreed or declared value of the property is hereby specifically state by the shipper to be not exceeding.

DRIVER'S SIGNATURE/AGENT : _____

NOTICE TO RECEIVERS :Please check each item on this shipping bill carefully. CMC will not be responsible for any exceptions to goods unless notified within twenty four hours and noted on this document.

RECEIVED BY : _____ DATE: _____ TIME: _____,

DELIVERED BY: _____ DATE: _____ TIME IN: _____, TIME OUT _____

STRAIGHT BILL OF LADING-SHORT FORM
ORIGINAL-NON NEGOTIABLE

72464667

SHIPMENT NO.(BOL) : 72464667	**CARRIER'S NAME:** PBH Priority Express Corp	**SEAL NUMBER :**
DATE AND TIME : 05/15/2018 12:19:00	**TRUCK/UNIT No:**	**TRAILER/RAILCAR No:**
SHIP FROM :	**CMC INCO TERMS:** CPT Bryan	**SOLD TO:** 3007327
CMC Sterling Steel Truck	**SHIP TO:** 3102704	Ellis Mc Ginnis Construction
2001 Brittmoore Road	Texas Traffic Institute T1w Rail -	2895 Eddy Gatesville Pkwy
Houston, TX 77043-2208	3100 State Hwy 47, Bldg. 7091	Eddy, TX 76524-3911
USA	Bryan, TX 77807-0000 USA	USA
Contact Phone No. :713-690-0347	Contact Phone No. :(254)859-5494	Contact Phone No. :2548595494
Fax No. :	Fax No. :(254)859-5497	Fax No. :2548595497

Subject to Section 7: Subject to Section 7 of Conditions of applicable bill of lading, if this shipment is to be delivered to the consignee without recourse on the consignor, the consignor shall sign the following statement. The carrier shall not make delivery of this shipment without payment of freight and all other lawful charges.

Consignor's Signature : _____

BOL INSTRUCTIONS:

NOTES/SPECIAL INSTRUCTIONS: MIKE 254-859-5494

Additional Instructions :

Material Details

Delivery	Cust PO	Ctrl Cd	Rel No.	Release Description	Dwg #	Material Description	PCS	Weight LB
PROJECT: R/1823300809 UP								
3178495	2812	0QXN	1	T1W RAIL		Rebar Black 60/420		5,520
						Total Weight		5,520

MTR'S INCLUDED

RECEIVED, subject to the classifications in effect on the date of the issue of the Bill of Lading, the property described above, in apparent good order, except as noted (contents of packages unknown), marked, consigned, and destined as indicated below, which said carrier (the word carrier being understood throughout this contract as meaning any person or corporation in possession of the property under the contract) agrees to carry to its usual place of delivery at said destination, if on its route, otherwise to deliver to another carrier on the route to said destination. It is mutually agreed, as to each carrier of all or any said property over all or any said property over all or any portion of said route to destination, and as to each party at any time interested in all or any of said property, that every service to be performed hereunder shall be subject to all the terms and conditions of the Uniform Domestic Straight Bill of Lading set forth (1) in Official, Southern, Western and Illinois Freight Classifications in effect on the date hereof, if this is a rail or a rail-water shipment, or (2) in the applicable motor carrier classification or tariff if this is a motor carrier shipment. Shipper hereby certifies that he is familiar with all the terms and conditions of the said bill of lading, including those on the back thereof, set forth in the classification or tariff which governs the transportation of this shipment and the said terms and conditions are hereby agreed to by the shipper and accepted for himself and his assigns. This is to certify that the above articles are properly describe by name and are packed and marked and are in proper condition for transportation according to regulations by the Interstate Commerce Commission. * If the shipment moves between two ports by a carrier by water, the law requires that the bill of lading shall state whether it is "carrier's or shipper's weight." * Shipper's imprints in lieu of stamp; not a part of Bill of Lading approved by the Interstate Commerce Commission. NOTE: Where the rate is dependent on value, shippers are required to state specifically in writing the agreed or declared value of property. The agreed or declared value of the property is hereby specifically state by the shipper to be not exceeding.

DRIVER'S SIGNATURE/AGENT : _____

NOTICE TO RECEIVERS :Please check each item on this shipping bill carefully. CMC will not be responsible for any exceptions to goods unless notified within twenty four hours and noted on this document.

RECEIVED BY : _____ DATE: _____ TIME: _____,

DELIVERED BY: _____ DATE: _____ TIME IN: _____ ,TIME OUT _____

STRAIGHT BILL OF LADING-SHORT FORM
ORIGINAL-NON NEGOTIABLE

72464667

SHIPMENT NO.(BOL) : 72464667 **DATE AND TIME :** 05/15/2018 12:19:00 **SHIP FROM :** CMC Sterling Steel Truck 2001 Brittmoore Road Houston, TX 77043-2208 USA Contact Phone No. :713-690-0347 Fax No. :	**CARRIER'S NAME:** PBH Priority Express Corp **TRUCK/UNIT No:** **CMC INCO TERMS:** CPT Bryan **SHIP TO:** 3102704 Texas Traffic Institute T1w Rail - 3100 State Hwy 47, Bldg. 7091 Bryan, TX 77807-0000 USA Contact Phone No. :(254)859-5494 Fax No. :(254)859-5497	**SEAL NUMBER :** **TRAILER/RAILCAR No:** **SOLD TO:** 3007327 Ellis Mc Ginnis Construction 2895 Eddy Gatesville Pkwy Eddy, TX 76524-3911 USA Contact Phone No. :2548595494 Fax No. :2548595497

Subject to Section 7: Subject to Section 7 of Conditions of applicable bill of lading, if this shipment is to be delivered to the consignee without recourse on the consignor, the consignor shall sign the following statement. The carrier shall not make delivery of this shipment without payment of freight and all other lawful charges.

Consignor's Signature : _____

BOL INSTRUCTIONS:

NOTES/SPECIAL INSTRUCTIONS: MIKE 254-859-5494

Additional Instructions :

Material Details

Delivery	Cust PO	Ctrl Cd	Rel No.	Release Description	Dwg #	Material Description	PCS	Weight LB
PROJECT: R/1823300809 UP								
3178495	2812	0QXN	1	T1W RAIL		Rebar Black 60/420		5,520
						Total Weight		5,520

MTR'S INCLUDED

RECEIVED, subject to the classifications in effect on the date of the issue of the Bill of Lading, the property described above, in apparent good order, except as noted (contents of packages unknown), marked, consigned, and destined as indicated below, which said carrier (the word carrier being understood throughout this contract as meaning any person or corporation in possession of the property under the contract) agrees to carry to its usual place of delivery at said destination, if on its route, otherwise to deliver to another carrier on the route to said destination. It is mutually agreed, as to each carrier of all or any said property over all or any said property over all or any portion of said route to destination, and as to each party at any time interested in all or any of said property, that every service to be performed hereunder shall be subject to all the terms and conditions of the Uniform Domestic Straight Bill of Lading set forth (1) in Official, Southern, Western and Illinois Freight Classifications in effect on the date hereof, if this is a rail or a rail-water shipment, or (2) in the applicable motor carrier classification or tariff if this is a motor carrier shipment. Shipper hereby certifies that he is familiar with all the terms and conditions of the said bill of lading, including those on the back thereof, set forth in the classification or tariff which governs the transportation of this shipment and the said terms and conditions are hereby agreed to by the shipper and accepted for himself and his assigns. This is to certify that the above articles are properly describe by name and are packed and marked and are in proper condition for transportation according to regulations by the Interstate Commerce Commission. * If the shipment moves between two ports by a carrier by water, the law requires that the bill of lading shall state whether it is "carrier's or shipper's weight." * Shipper's imprints in lieu of stamp; not a part of Bill of Lading approved by the Interstate Commerce Commission. NOTE: Where the rate is dependent on value, shippers are required to state specifically in writing the agreed or declared value of property. The agreed or declared value of the property is hereby specifically state by the shipper to be not exceeding.

DRIVER'S SIGNATURE/AGENT : _____

NOTICE TO RECEIVERS :Please check each item on this shipping bill carefully. CMC will not be responsible for any exceptions to goods unless notified within twenty four hours and noted on this document.

RECEIVED BY : _____ DATE: _____ TIME: _____,

DELIVERED BY: _____ DATE: _____ TIME IN: _____, TIME OUT _____

CMC Sterling Steel
2001 Britmoore
Houston, TX 77043-
Phone: (713) 690-0347 FAX: (713) 690-5758

JOB NUMBER	RELEASE NUMBER	REQ. DELIVERY DATE	PAGE
1823300809	1		1 of 1

JOB NAME: TX TRAFFIC INSTITUTE T1WRAI(DW — CC: 0QXN

CUSTOMER: ELLIS-MCGINNIS CONSTRUCTION CO. — BY: GL

MATERIAL TYPE: Rebar, Grade 60, Black — REFERENCE — DRAWING ID — DESCRIPTION: T1W RAIL

Itm	Qty	Size	Length	Mark	Shape	Lbs	A	B	C	D	E	F/R	G	H	J	K	O	BC
1	285	5	6-02	TTL	17	1834		3-01	3-01									AC03
2	285	5	4-01	VB	S4	1213	0-10	1-013	0-11	1-021								AC08
3	68	5	2-07	Z	3	183		0-11	0-083	0-11				0-061		0-061		AC01
4	95	5	2-07	TB	17	256		0-07	2-00									AC03
5	8	5	40-00	R5		334												ST
	741.					3820.												
6	100	4	5-02	BTL	17	345		2-07	2-07									AC02
7	42	4	40-00	R4-1		1122												ST
8	14	4	25-00	R4-2		234												0
	156.					1701.												

Total Weight: 5,521 Lbs

Longest Length: 40-00

WEIGHT SUMMARY

SIZE	TOTAL ITEMS	TOTAL PIECES	TOTAL LBS	STRAIGHT ITEMS	STRAIGHT PIECES	STRAIGHT LBS	LIGHT BENDING ITEMS	LIGHT BENDING PIECES	LIGHT BENDING LBS	HEAVY BENDING ITEMS	HEAVY BENDING PIECES	HEAVY BENDING LBS
4	3	156	1,701	2	56	1,356	0	0	0	1	100	345
5	5	741	3,820	1	8	334	1	285	1,213	3	448	2,273
	8	897	5,521	3	64	1,690	1	285	1,213	4	548	2,618

Total Weight: 5,521 Lbs

Longest Length: 40-00

v16.02.081 (T) (HOW) ©2018 aSa UNAUTHORIZED REPRODUCTION PROHIBITED Friday, April 27, 2018 11:52 AM

CMC STEEL TEXAS
1 STEEL MILL DRIVE
SEGUIN TX 78155-7510

CERTIFIED MILL TEST REPORT

For additional copies call
830-372-8771

We hereby certify that the test results presented here are accurate and conform to the reported grade specification

TOMMY HEWITT
Quality Assurance Manager

HEAT NO.:3079675 SECTION: REBAR 13MM (#4) 40'0" 420/60 GRADE: ASTM A615-16 Gr 420/60 ROLL DATE: 04/25/2018 MELT DATE: 04/25/2018 Cert. No.: 82374860 / 079675A371	SOLD TO	CMC Rebar Houston-West BRITTMOORE RD. HOUSTON TX US 77043-2208 713-690-0347	SHIP	CMC Sterling Steel 2001 Brittmoore Rd Houston TX US 77043-2208 7136900347 7136905758	Delivery#: 82374860 BOL#: 72461341 CUST PO#: CUST P/N: DLVRY LBS / HEAT: 13254.000 LB DLVRY PCS / HEAT: 496 EA

Characteristic	Value	Characteristic	Value	Characteristic	Value
C	0.41%				
Mn	0.81%				
P	0.011%				
S	0.048%				
Si	0.18%				
Cu	0.32%				
Cr	0.16%				
Ni	0.16%				
Mo	0.056%				
V	0.000%				
Cb	0.002%				
Sn	0.011%				
Al	0.000%				
Yield Strength test 1	62.8ksi				
Tensile Strength test 1	99.4ksi				
Elongation test 1	13%				
Elongation Gage Lgth test 1	8IN				
Bend Test Diameter	1.750IN				
Bend Test 1	Passed				

The Following is true of the material represented by this MTR:

- *Material is fully killed*
- *100% melted and rolled in the USA*
- *EN10204:2004 3.1 compliant*
- *Contains no weld repair*
- *Contains no Mercury contamination*
- *Manufactured in accordance with the latest version of the plant quality manual*
- *Meets the "Buy America" requirements of 23 CFR635.410*

REMARKS :

TR No. 0-6946-R2

D-14

2019-03-26

MATERIAL TEST REPORT

Date Printed: 05/02/2018

Mid American Steel & Wire
Madill, Oklahoma

Bill to:
CMC REBAR
P O BOX 139094

DALLAS, TX 75313

Ship to:
CMC REBAR
2001 BRITTMOORE

HOUSTON, TX 77043

Customer No: 000000006015
PO Number: 4501221760
Ship Date: 05/02/2018
Order Number: 93623
Load Number: 117909

Item Number	Description
4REBAR	# 4 GRADE 60 COILED REBAR

CHEMICAL ANALYSIS

Heat Number	C	Mn	P	S	Si	Cu	Ni	Cr	Mo	Sn	V	Al	N	Nb
1820634	0.4300	0.9000	0.0150	0.0220	0.2400	0.2400	0.1700	0.2500	0.0500	0.0130	0.0020	0.0040	0.0082	0.0003

MECHANICAL PROPERTIES

Heat Number	Yield (Psi/Mpa)	Tensile (Psi/Mpa)	Elongation (% 8" guage)	Bend Test Pass/Fail
1820634	68590 psi / 473 Mpa	116653 psi / 805 Mpa	13.27	Pass

I hereby certify that the above test results are correct as contained in the records of the company. All Manufacturing processes of the steel materials in this product, including melting have occurred in the United States. The material was produced and tested according to ASTM A615/A615M-065.

Quality Assurance: _____

TR No. 0-6946-R2

D-15

2019-03-26

MATERIAL TEST REPORT

Date Printed: 03/28/2018

Mid American Steel & Wire
Macksill, Oklahoma

Bill to:
CMC REBAR
P O BOX 139094

DALLAS, TX 75313

Ship to:
CMC REBAR
2001 BRITTMOORE

HOUSTON, TX 77043

Customer No: 000000006015
PO Number: 4501201440
Ship Date: 03/28/2018
Order Number: 92187
Load Number: 116527

Item Number	Description
5REBAR	# 5 GRADE 60 COILED REBAR

CHEMICAL ANALYSIS

Heat Number	C	Mn	P	S	Si	Cu	Ni	Cr	Mo	Sn	V	Al	N	Nb
1723630	0.4600	0.8700	0.0170	0.0260	0.2000	0.2100	0.1100	0.1900	0.0300	0.0110	0.0030	0.0010	0.0067	0.0005

MECHANICAL PROPERTIES

Heat Number	Yield (Psi/Mpa)	Tensile (Psi/Mpa)	Elongation (% 8" guage)	Bend Test Pass/Fail
1723630	62474 psi / 431 Mpa	108254 psi / 747 Mpa	11.71	Pass

I hereby certify that the above test results are correct as contained in the records of the company. All Manufacturing processes of the steel materials in this product, including melting have occurred in the United States. The material was produced and tested according to ASTM A615/A615M-065.

Quality Assurance: _____

TR No. 0-6946-R2

D-16

2019-03-26

CMC STEEL TEXAS
1 STEEL MILL DRIVE
SEGUIN TX 78155-7510

CERTIFIED MILL TEST REPORT

For additional copies call
830-372-8771

We hereby certify that the test results presented here are accurate and conform to the reported grade specification

TOMMY HEWITT
Quality Assurance Manager

HEAT NO.:3079087 SECTION: REBAR 16MM (#5) 40'0" 420/60 B096 GRADE: ASTM A615-16 Gr 420/60 ROLL DATE: 04/06/2018 MELT DATE: 04/03/2018 Cert. No.: 82359116 / 079087A236	SOLD TO CMC Rebar Houston-West BRITTMOORE RD. HOUSTON TX US 77043-2208 713-690-0347	SHIP TO CMC Sterling Steel 2001 Brittmoore Rd Houston TX US 77043-2208 7136900347 7136905758	Delivery#: 82359116 BOL#: 72437512 CUST PO#: CUST P/N: DLVRY LBS / HEAT: 48060.000 LB DLVRY PCS / HEAT: 1152 EA

Characteristic	Value	Characteristic	Value	Characteristic	Value
C	0.41%				
Mn	0.82%				
P	0.013%				
S	0.049%				
Si	0.19%				
Cu	0.34%				
Cr	0.20%				
Ni	0.20%				
Mo	0.088%				
V	0.000%				
Cb	0.002%				
Sn	0.012%				
Al	0.002%				
Yield Strength test 1	69.3ksi				
Tensile Strength test 1	106.4ksi				
Elongation test 1	14%				
Elongation Gage Lgth test 1	8IN				
Bend Test Diameter	2.188IN				
Bend Test 1	Passed				

The Following is true of the material represented by this MTR:

- *Material is fully killed
- *100% melted and rolled in the USA
- *EN10204:2004 3.1 compliant
- *Contains no weld repair
- *Contains no Mercury contamination
- *Manufactured in accordance with the latest version of the plant quality manual
- *Meets the "Buy America" requirements of 23 CFR635.410

REMARKS :

04/09/2018 15:29:41

TR No. 0-6946-R2

D-17

2019-03-26

MATERIAL STATEMENT

SUPPLIER: Texas Corrugators-Austin Division, Inc.
ADDRESS: 105 Tradesman Park Dr.
Hutto, TX 78634
CONTRACT NUMBER: 512-388-0588

COUNTY: TEXAS A&M TTI TXDOT
PROJECT: B860008
CONTROL:
CONTRACTOR: ROADWAY SPECIALTIES, INC

Purchase Order #	Quantity (Amt/Units)	MATERIAL DESCRIPTION	Mill Name	Heat #	Material Use	Required Specification	Documentation HTR	Documentation Cert
R-0443	168.4 L. F.	6" X 2" X ¼" RECT. TUBE	SOUTHLAND TUBE	1719347	T1W RAIL	A500-13 B\C	X	
	31.6 SQ. FT.	7/8" PLATE	NUCOR STEEL	B6Y6840	T1W RAIL	A572-50	X	
	4.1 SQ. FT.	¾" PLATE	SSAB	E88228	T1W RAIL	A36	X	
	15 SQ. FT	3/16" PLATE	UNITED STATES STEEL CORPORATION	52473D	T1W RAIL	A36	X	

This is to certify that the materials listed above and on the attached supplement (if attached) are in conformance with the governing specification(s). This is also to certify that all manufacturing processes for steel and iron materials or for the application of coatings (epoxy, galvanizing, painting or any other coating that protects or enhances the value of the steel or iron material) to these materials occurred in the United States of America. Manufacturing processes are defined as all processes required to change the raw ore or scrap metal into the finished in-place steel or iron product. The attached mill test reports (MTRs) and Certifications (Cert.) are offered as proof of domestic origin.

Subscribed and sworn to before me
this 16th day of Aug 2018
Notary Public Karen DuBose
My Commission Expires: 10.4 2021

KAREN DUBOSE
Notary Public, State of Texas
Comm. Expires 10-04-2021
Notary ID 11033805

I declare under penalty of perjury under the laws of the United States of America and the State of Texas, that the foregoing is true and correct and that I am authorized to sign for the firm listed above.

Authorized Corporate Official Signature — Date 8/16/18

Ryan J. Cole – Vice President
Type Name and Title

Texas Corrugators-Austin Division, Inc.
(Firm Name)

TEXAS CORRUGATORS

P.O. Box 938
Round Rock, TX 78680
EIN# 74-2516771
(512) 388-0588 ph
(512) 388-0417 fax

INVOICE

Invoice #
138969
Invoice/Ship Date
6/25/2018

Sold to:

ROADWAY SPECIALTIES, INC
PO BOX 90309
AUSTIN, TX 78709

Deliver to:

CUSTOMER PICK UP

Customer PO	Ship Via	Telephone	Ref. No.	Order Date	SLS #	Terms
13153	CPU	512-280-6666	R-0443	6/22/2018	RJC	Net 30

Units	Description	Qty	U/M	Unit Price	Amount
84.83	T1W RAIL	84.83	EA		
	INCLUDES:				
6	17' 10" RAIL TUBE (A1)	6.0	EA		
2	30' 10" RAIL TUBE (A2)	2.0	EA		
10	RAIL POST	10.0	EA		
20	U-BOLT	20.0	EA		
20	PLATE WASHERS	20.0	EA		
64	* 7/8" X 11" A325 BOLT, NUT & WASHER	64.0	EA		
6	SPLICE TUBES	6.0	EA		
6	3/4" X 3 1/2" A325 BOLT, NUT, LOCK WASHER & FLAT WASHER	6.0	EA		
16	* ANCHOR PLATES	16.0	EA		
	* PU ON SB 17179				
	+ Material Statement Needed				

Job Name:	TEXAS A&M TTI TXDOT T1W RAIL
Job #:	B860008
General:	ELLIS MCGINNES

Amount	
Tax (0.0%)	$0.00
Total	

Namasco

02-21-2018 11:00 Load - 2989385 BL - 3837958 BLR466
Texas Corrugators, Inc Heat - 1719347
Cust. PO - M-8787 Order-Line - 15785209 / 1

SOUTHLAND TUBE INCORPORATED
a NUCOR company

3525 Richard Arrington, Jr., Blvd. N.
Birmingham, Alabama 35234
Phone: (205) 251-1884
Lab Fax (205) 421-4561
Lab@SouthlandTube.com

TEST REPORT

Customer Name: KLOECKNER METALS CORPORATION

Customer PO No.: 7244956 Customer Part No: **T6214RECTA5000288**

Spec/Grade: A500-13 Grade B/C Heat No.: **1719347**

Description: CARBON STEEL TUBING Print Date: 2/16/2018

Size/Length: 6" X 2" X 1/4" 24' Nominal Thickness: 0.250

Carbon (C):	**0.2200**	Tin (Sn):	**0.0040**	Vanadium (V):	**0.0040**
Manganese (Mn):	**0.8000**	Nickel (Ni):	**0.0300**	Columbium (Cb):	**0.0010**
Phosphorus (P):	**0.0090**	Chromium (Cr):	**0.0400**	Titanium (Ti):	**0.0010**
Sulphur (S):	**0.0030**	Molybdenum (Mo):	**0.0100**	Boron (B):	**0.0000**
Silicon (Si):	**0.0400**	Aluminum (Al):	**0.0250**	Calcium (Ca):	**0.0020**
Copper (Cu):	**0.0800**	Nitrogen (N):	**0.0050**	Carbon Equiv. (CE):	0.3715

Sample Number	Sample Date	Tensile (psi)	Yield (psi)	Elongation (%)
SL60752	2/1/2018	76,200	62,300	27.50

We hereby certify that the above figures are correct as contained in the records of this company. Testing, where it is performed, is performed according to applicable standards (Yield Strength determined using 0.2% offset method and Elongation is measured over a 2" gauge length). Finished goods that require destructive testing by either flattening or flaring to meet the requirements of the standard to which they are certified have been destructively tested in accordance with the pertinent standard. Further, this certification is compliant with the EN10204:2004 Standard for Type 3.1 Inspection Documents.

Ron Lowery

Laboratory Manager
Southland Tube Incorporated

Melted & Manufactured in the U.S.A.

STI Pickup No.: 02LB245 STI Order No.: 00458471 STI Item No.: 2.0X6.025024

SFI GRAY STEEL - Date:5/4/2018 - Customer:TEXAS CORRUGATORS-AUSTIN DIV, (EMAIL INV) - PO#:R-0443 - P/N:

NUCOR
NUCOR STEEL TUSCALOOSA, INC.

MILL TEST CERTIFICATE

1700 HOLT RD N.E.
Tuscaloosa, AL 35404-1000
800 800-8204
customerservice@nucortusk.com

Load Number	Tally	Mill Order Number	PO NO	Line NO	Part Number	Certificate Number	Prepared
R140252	00000000701423	N-151259-001	22.989	1		S70142301-1	01/12/2017 09:12

Grade

Order Description:
Hot Roll Plate
A572 50, 0.8750 IN x 96.000 IN x 240.000 IN
Quality Plan Description:
A572500 LOW SI: ASTM A572-50-15/A709-50-15/M270-50 Lo Si H impac

10 / 24 / 2017 **SFI-GRAY STEEL**

Customer Name:
Customer PO #:
Thickness: 7/8" SFI PO #: 701993
Heat & Slab: B6Y6840-02
Plate #: 54545

Shipped Item	Heat/Slab Number	Certified By	C	Mn	P	S	Si	Cu	Ni	Cr	Mo	Cb	V	Al	Ti	N2	B	Ca	Sn	CEV	ACI
6L2535BA	B6Y6840-02 ***	B6Y6840	0.07	1.23	0.012	0.003	0.03	0.16	0.06	0.07	0.022	0.047	0.077	0.025	0.015	0.011	0.0001	0.0018		0.32	
6L2535CA	B6Y6840-02 ***	B6Y6840	0.07	1.23	0.012	0.003	0.03	0.16	0.06	0.07	0.022	0.047	0.077	0.025	0.015	0.011	0.0001	0.0018		0.32	
6L2535CB	B6Y6840-02 ***	B6Y6840	0.07	1.23	0.012	0.003	0.03	0.16	0.06	0.07	0.022	0.047	0.077	0.025	0.015	0.011	0.0001	0.0018		0.32	

Shipped Item	Certified By	Heat Number	Yield ksi	Tensile ksi	Y/T %	ELONGATION % 2"	ELONGATION % 8"	Bend OK2	Hard HB	Charpy Impacts (ft-lbs) Size	mm	1	2	3	Avg	Shear % 1	2	3	Avg	Test Temp
6L2535BA	S6L2535FTT	B6Y6840 ***	65.5	70.9	92.4		26.1													
6L2535BA	S6L2535FLI	B6Y6840 ***								7.5	181	196	202	193.0						-20 F
6L2535CA	S6L2535FTT	B6Y6840 ***	65.5	70.9	92.4		26.1													
6L2535CA	S6L2535FLI	B6Y6840 ***								7.5	181	196	202	193.0						-20 F
6L2535CB	S6L2535FTT	B6Y6840 ***	65.5	70.9	92.4		26.1													
6L2535CB	S6L2535FLI	B6Y6840 ***								7.5	181	196	202	193.0						-20 F

Items: 3 PCS: 3 Weight: 17152 LBS

Mercury has not come in contact with this product during the manufacturing process nor has any mercury been used by the manufacturing process. Certified in accordance with EN 10204 3.1. No weld repair has been performed on this material. ISO 9001:2008 Registered, PED Certified.

*** Indicates Heats melted and Manufactured in the U.S.A.

We hereby certify that the product described above passed all of the tests required by the specifications.

Dr. Quilin Yu - Metallurgist

TR No. 0-6946-R2

D-21

2019-03-26

SFI GRAY STEEL - Date:5/4/2018 - Customer:TEXAS CORRUGATORS-AUSTIN DIV, (EMAIL INV) - PO#:R-0443 - P/N:

SSAB

Test Certificate

Form TC1: Revision 2: Date 23 Apr 2014

12400 Highway 43 North, Axis, Alabama 36505, US

3 / 5 / 2018 **SFI-GRAY STEEL**

Customer Name:

Customer PO #:

Thickness: 3/4" SFI PO #: 702112

Heat & Slab: E8B228-A04

Plate #: 55318-9,55321-27

Customer P.O. No.: 702112 | **Mill Order No.: 41-529338-01** | **Shipping Manifest : AT260404**

Product Description: ASTM A36(14)/A709(17)36/ASME SA36(17) AASHTO M270(15)36, 0.80-1.20 MN

Ship Date: 26 Feb 18
Cert Date: 26 Feb 18

Cert No: 081650798
(Page 1 of 1)

Size: 0.750 X 82.00 X 258.0 (IN)

Tested Pieces | **Tensiles** | **Charpy Impact Tests**

Heat Id	Piece Id	Tested Thickness	Tst Loc	YS (KSI)	UTS (KSI)	%RA	Elong % 2in 8in	Tst Dir	Hardness	Abs. Energy(FTLB) 1 2 3 Avg	% Shear 1 2 3 Avg	Tst Tmp	Tst Dir	Tst Siz (mm)	BDWTT Tmp %Shr
E8B228	A03	0.623 (DISCRT)	L	57	77		22	T							
E8B228	A04	0.748 (DISCRT)	L	56	76		22	T							
E8B228	A07	1.000 (DISCRT)	L	51	75		23	T							

Chemical Analysis

Heat Id	C	Mn	P	S	Si	Tot Al	Cu	Ni	Cr	Mo	Cb	V	Ti	B	N	IIW	ORGN
E8B228	.19	.99	.008	<.001	.23	.025	.26	.17	.10	.07	.008	.004	.008	.0003	.0062	.42	USA

KILLED STEEL
MERCURY IS NOT A METALLURGICAL COMPONENT OF THE STEEL AND NO MERCURY WAS INTENTIONALLY ADDED DURING THE MANUFACTURE OF THIS PRODUCT.
CEV (IIW) = C + MN/6 + (CR+MO+V)/5 + (NI+CU)/15
MTR EN 10204:2004 INSPECTION CERTIFICATE 3.1 COMPLIANT
100% MELTED AND MANUFACTURED IN THE USA.
PRODUCTS SHIPPED:
⇨ E8B228 A04 PCES: 8, LBS: 36000 E8B228 A05 PCES: 2, LBS: 9000

(U) Cust Part # :

WE HEREBY CERTIFY THAT THIS MATERIAL WAS TESTED IN ACCORDANCE WITH, AND MEETS THE REQUIREMENTS OF, THE APPROPRIATE SPECIFICATION

Justin Ward
SENIOR METALLURGIST - PRODUCT

United States Steel Corporation

Melted & Manufactured in the USA Certificate

Order Number: CQ36555-01 **Part Number:** 37283 **Purchase Order Number:** M4424561=4/08 HICKMAN

Source Plant: Granite City Works **Certificate Date:** 05/14/2013

Shipment Details

Sold To: Ryerson Procurement Corp
Po Box 91602
Lubbock, TX 79490-1602, US

Ship To: Ryerson Procurement Corp
C/O Hickman Processing
5026 N County Rd 1015
Blytheville, AR 72315-6907, US

Producer: United States Steel Corporation
600 Grant Street
Pittsburgh, PA 15219, USA

Order Information - CQ36555-01

ASTM A1011-12B 36 TYPE 2 FOR CONVERSION TO A36 APPROVED SS C .25 MAX MN 1.35 MAX PICKLE NON-TEMPER ROLLED HR36SK58 EXPOSED-NONTR OIL MEDIUM NO PICKLE WELDS YS MIN 36 KSI TS 58 KSI/80 KSI EL MIN 21 % EL DIST 2 INCHES

Item	Description	Ft Length IN
01	.177IN X 48	

Load Lift Information

Load ID:	Ship Date:	Warehouse Number:	Material ID:	Heat Number:	Weight:	Lin Ft/Pcs:
CW13884	05/14/2013	04/09/13-32	HSM 00539570	52473D	41,100	1,383

This **Melted and Manufactured in the USA Certificate** confirms that the steel products which are described above resulted from a production sequence in which the melting and pouring of the iron and steel and all major manufacturing steps occurred in the *United States of America.*

This document is for information purposes only. It is the Buyer's responsibility to investigate and understand its or its customer's requirements and to determine if the steel products described above comply with the requirements of any particular federal, state, provincial or local law or regulation specifying the origin of the steel or restricting the place of manufacture of steel which can be used in any public works project or other application or use that is funded directly or indirectly by government sources. Buyers concerned with such matters should consult with their customer and/or review applicable laws, regulations and government agency guidelines to determine the extent to which melting and/or manufacturing of steel in any country, state, province or locale is required for any particular application or use of the steel products identified above.

Texas A&M Transportation Institute

Roadside Safety and Physical Security Division - Proving Ground

Project #469468-4 T1W 2018-06-13

Drawn by BLG

Sheet 1 of 2 469468-4, Concrete Map

T:\1-ProjectFiles\469468 - TxDOT - Bligh-4 T1W Bridge Rail\Drafting, T1W\469468-4, concrete and rebar, T1W

Texas A&M Transportation Institute	Roadside Safety and Physical Security Division - Proving Ground	
Project #469468-4 T1W		2018-06-13
Drawn by BLG	Scale 1:200	Sheet 2 of 2 469468-4, Deck and Wall

T:\1-ProjectFiles\469468 - TxDOT - Bligh-4 T1W Bridge Rail\Drafting, T1W\469468-4, concrete and rebar, T1W

Texas A&M Transportation Institute Proving Ground 3100 SH 47, Bldg 7091 Bryan, TX 77807 Texas A&M University College Station, TX 77843 Phone 979-845-6375	5.7.2 Concrete Sampling	Doc. No. QPF 5.7.2	Revision Date: 2018-04-17
Quality Policy Form	Revised by: B. L. Griffith Approved by: D. Kuhn	Revision: 6	Page: 1 of 1

Project No: 469468-4 **Casting Date:** 2018/06/13 **Mix Design (psi):** 4000

Printed Name of Technician taking Sample: Max Robinson

Printed Name of Technician breaking Sample: Greg Fritz

Signed Name of Technician taking Sample:

Signed Name of Technician breaking Sample:

Load No.	Truck No.	Ticket No.	Location (from concrete map)
C/T1	39026	0021245	1 TRUCK 100% of curb

Load No.	Break Date	Cylinder Age	Total Load (lbs)	Break (psi)	Average
T1	2018-8-1	52 DAYS	193,000	6,825	
↓			182,000	6,435	6600
↓			185,000	6,545	

Texas A&M Transportation Institute Proving Ground 3100 SH 47, Bldg 7091 Bryan, TX 77807 Texas A&M University College Station, TX 77843 Phone 979-845-6375	5.7.2 Concrete Sampling	Doc. No. QPF 5.7.2	Revision Date: 2018-04-17
Quality Policy Form	Revised by: B. L. Griffith Approved by: D. Kuhn	Revision: 6	Page: 1 of 1

Project No: 469468-4 **Casting Date:** 2018-06-11 **Mix Design (psi):** 4000 psi

Printed Name of Technician taking Sample: GREG FRITZ

Signed Name of Technician taking Sample:

Printed Name of Technician breaking Sample: GREG FRITZ

Signed Name of Technician breaking Sample:

Load No.	Truck No.	Ticket No.	Location (from concrete map)
D1/T1	390108	0021700	Starting North End, Wall/Deck, 1/3 Length
D2/T2	390143	0042526	Middle 3rd or total wall/Deck
D3/T3	390127	0042528	Southern End, Final 1/3, wall/Deck

Load No.	Break Date	Cylinder Age	Total Load (lbs)	Break (psi)	Average
T1	2018-8-1	50 DAYS	175,000	6,190	
↓	↓	↓	175,000	6,190	6,035
↓			162,000	5,730	
T2			177,000	6,260	
↓			180,000	6,365	6,380
↓			184,000	6,510	
T3			198,000	7,005	
↓			189,000	6,685	6,860
↓	↓	↓	195,000	6,895	

KNIFE RIVER
AN MDU RESOURCES COMPANY

SOUTH REGION/MAIN OFFICE
6310 State Highway 21 West
Bryan, TX 77807
PH: (979) 361-2900
FAX: (979) 361-2920

RB 0021749

SOLD TO:
Riverbend

ELLIS-MCGINNIS CONSTRUC
P.O. BOX 40
EDDY

Disp Order#: 2020

SHIP TO:
TAMU TRANSPORTATION INSTITUTE
LF47 LF RELLIS CAMPUS RT AT THE
STOP SIGN 2ND STOP TAKE A LF 2ND
STOP TAKE A RT GO 2 STOP SIGN D
OWN TAKE A LF GO TO MORE STOP SI
GN DOWN TAKE RT GO THE NEXT STOP

TIME	FORMULA	LOAD SIZE	YARDS ORDERED	PO#	DRIVER/TRUCK		PLANT TRANSACTION #
8:41:32	CLSLS	6.50	6.50	2801	[illegible]	390126	
DATE		**LOAD #**	**YARDS DEL.**	**BATCH #**	**WATER TRIM**	**SLUMP**	**TICKET NUMBER**
06/13/18	PROJECT TAMUTRANS	1	6.50			5.00 in	20012869

WARNING
IRRITATING TO THE SKIN AND EYES
Contains Portland Cement. Wear Rubber Boots and Gloves, PROLONGED CONTACT MAY CAUSE BURNS. Avoid Contact With Eyes and Prolonged Contact With Skin. In Case of Contact With Skin or Eyes, Flush Thoroughly With Water. If Irritation Persists, Get Medical Attention.**KEEP CHILDREN AWAY.**

CONCRETE is a PERISHABLE COMMODITY and BECOMES THE PROPERTY of the PURCHASER UPON LEAVING the PLANT. ANY CHANGES or CANCELLATION of ORIGINAL INSTRUCTIONS MUST be TELEPHONED to the OFFICE BEFORE **LOADING** starts.
The undersigned promises to pay all costs, including reasonable attorney's fees, incurred in collecting any sums owed.
All accounts not paid within 30 days of delivery will bear interest at the rate of 18% per annum.
Not Responsible for Reactive Aggregate or Color Quality. No Claim Allowed Unless Made at Time Material is Delivered.
A $15.00 Service Charge and Loss of the Cash Discount will be Collected on all Returned Checks.
Excess Delay Time Charged @ $75.00/hr.

PROPERTY DAMAGE RELEASE
(TO BE SIGNED IF DELIVERY TO BE MADE INSIDE CURB LINE)
Dear Customer - The driver of this truck in presenting this RELEASE to you for your signature is of the opinion that the size and weight of this truck may possibly cause damage to the premises and/or adjacent property if he places the material in this load where you desire it. It is our wish to help you in every way that we can, but in order to do this the driver is requesting that you sign this RELEASE relieving him and this supplier from any responsibility from damage that may occur to the premises and or adjacent property, buildings, sidewalks, drive-ways, curbs, etc., by the delivery of this material, and that you also agree to help him remove mud from the wheels of his vehicle so that he will not litter the public street. Further, as additional consideration; the undersigned agrees to indemnify and hold harmless the driver of this truck and this supplier for any and all damage to the premises and/or adjacent property which may be claimed by anyone to have arisen out of delivery of this order.
SIGNED:
X _____

Excessive Water is Detrimental to Concrete Performance.
H_2O Added by Request / Authorized By:
_____GAL X _____
WEIGHMASTER

Thank you for your business

NOTICE: MY SIGNATURE BELOW INDICATES THAT I HAVE READ THE HEALTH WARNING NOTICE AND SUPPLIER WILL NOT BE RESPONSIBLE FOR ANY DAMAGE CAUSED WHEN DELIVERING INSIDE CURB LINE.
LOAD RECEIVED BY
X _____

QUANTITY	CODE	DESCRIPTION	UNIT PRICE	EXTENDED PRICE
6.50 yd	CLSLS	CLASS S 4000 PSI		

OUR MIXES ARE DESIGNED TO ACHIEVE SPECIFICATIONS AT A MAX 4" SLUMP

RETURNED TO PLANT	LEFT JOB	FINISH UNLOADING	ON SITE TESTING		AIR TEMP
			TESTING LAB:		
LEFT PLANT	**ARRIVED JOB**	**START UNLOADING**	**SLUMP**	**CONCRETE TEMP.**	
8:55	9:12	9:15			
TOTAL ROUND TRIP	**TOTAL AT JOB**	**UNLOADING TIME**	**AIR**	**CYLINDERS**	

Prev. AMT
Ticket Total
Grand Total

ADDITIONAL CHARGE 1 _____
ADDITIONAL CHARGE 2 _____
GRAND TOTAL ▶

Truck	Driver	User	Disp Ticket Num	Ticket ID	Time	Date
390126	559579	user	20012869	12815	8:41	

RB 0021749

Load Size	Mix Code	Returned	Qty	Mix Age	Seq	Load ID
6.50 CYDS	CLSLS				D	9

Material	Design Qty	Required	Batched	% Var	% Moisture	Actual	Wat
CEMENT	417.00 lb	2710.50 lb	2706.00 lb	-0.17%			
FLYASH	143.00 lb	929.50 lb	932.00 lb	0.27%			
SAND	1223 lb	8287 lb	8340 lb	0.64%	4.25% M	41 gl	
LMSTN1"	1380 lb	8992 lb	8930 lb	-0.69%	0.25% M	3 gl	
GRAVEL3/8"	460 lb	3005 lb	3560 lb	> 18.47%	0.50% M	2 gl	
WATER	252 lb	1154 lb	1157 lb	0.24%		139 gl	
POZZ80	25.00 oz	162.50 oz	163.00 oz	0.31%			
AE-90	3.00 oz	19.50 oz	19.50 oz	0.00%			

Actual Num Batches: 1
Load 25636 lb Design W/C: 0.450 Water/Cement: 0.450 T Design 196.3 gl Actual 184.2 gl To Add: 12.1 gl
Slump: 5.00 in Water in Truck: 0.0 gl Adjust Water: 0.0 gl / Load Trim Water: -2.0 gl / CYL
Actual W/C Ratio: 0.423 Actual Water: 184 gl Batched Cement: 3638 lb Allowable Water: 100 gl

KNIFE RIVER
AN MDU RESOURCES COMPANY

SOUTH REGION/MAIN OFFICE
6310 State Highway 21 West
Bryan, TX 77807
PH: (979) 361-2900
FAX: (979) 361-2920

RB 0021700

Riverbend

ELLIS-MCGINNIS CONSTRUC
P.O. BOX 40
EDDY

Disp Order#: 2010

SHIP TO:
TAMU TRANSPORTATION INSTITUTE
LF47 LF RELLIS CAMPUS RT AT THE
STOP SIGN 2ND STOP TAKE A LF 2ND
STOP TAKE A RT GO 2 STOP SIGN D
OWN TAKE A LF GO TO MORE STOP SI
GN DOWN TAKE RT GO THE NEXT STOP

TIME	FORMULA	LOAD SIZE	YARDS ORDERED		DRIVER/TRUCK		PLANT TRANSACTION #
7:53:10	CLSLS	10.00	30.00	2801	MELVIN MA	390108	
DATE		**LOAD #**	**YARDS DEL.**	**BATCH #**	**WATER TRIM**	**SLUMP**	**TICKET NUMBER**
06/11/18	TAMUTRANS	1	10.00			5.00 in	20012820

WARNING
IRRITATING TO THE SKIN AND EYES
Contains Portland Cement. Wear Rubber Boots and Gloves, PROLONGED CONTACT MAY CAUSE BURNS. Avoid Contact With Eyes and Prolonged Contact With Skin. In Case of Contact With Skin or Eyes, Flush Thoroughly With Water. If Irritation Persists, Get Medical Attention. **KEEP CHILDREN AWAY.**

CONCRETE is a PERISHABLE COMMODITY and BECOMES THE PROPERTY of the PURCHASER UPON LEAVING the PLANT. ANY CHANGES or CANCELLATION of ORIGINAL INSTRUCTIONS MUST be TELEPHONED to the OFFICE BEFORE **LOADING** starts.
The undersigned promises to pay all costs, including reasonable attorney's fees, incurred in collecting any sums owed.
All accounts not paid within 30 days of delivery will bear interest at the rate of 18% per annum.
Not Responsible for Reactive Aggregate or Color Quality. No Claim Allowed Unless Made at Time Material is Delivered.
A $15.00 Service Charge and Loss of the Cash Discount will be Collected on all Returned Checks.
Excess Delay Time Charged @ $75.00/hr.

PROPERTY DAMAGE RELEASE
(TO BE SIGNED IF DELIVERY TO BE MADE INSIDE CURB LINE)
Dear Customer - The driver of this truck in presenting this RELEASE to you for your signature is of the opinion that the size and weight of this truck may possibly cause damage to the premises and/or adjacent property if he places the material in this load where you desire it. It is our wish to help you in every way that we can, but in order to do this the driver is requesting that you sign this RELEASE relieving him and this supplier from any responsibility from damage that may occur to the premises and or adjacent property, buildings, sidewalks, drive-ways, curbs, etc., by the delivery of this material, and that you also agree to help him remove mud from the wheels of his vehicle so that he will not litter the public street. Further, as additional consideration; the undersigned agrees to indemnify and hold harmless the driver of this truck and this supplier for any and all damage to the premises and/or adjacent property which may be claimed by anyone to have arisen out of delivery of this order.
SIGNED:
X

Excessive Water is Detrimental to Concrete Performance.
H_2O Added by Request / Authorized By:
_____GAL X_____
WEIGHMASTER

Thank you for your business

NOTICE: MY SIGNATURE BELOW INDICATES THAT I HAVE READ THE HEALTH WARNING NOTICE AND SUPPLIER WILL NOT BE RESPONSIBLE FOR ANY DAMAGE CAUSED WHEN DELIVERING INSIDE CURB LINE.
LOAD RECEIVED BY
x _____

QUANTITY	CODE	DESCRIPTION	OUR MIXES ARE DESIGNED TO ACHIEVE SPECIFICATIONS AT A MAX 4" SLUMP	UNIT PRICE	EXTENDED PRICE
10.00 yc	CLSLS	CLASS S 4000 PSI			

RETURNED TO PLANT	LEFT JOB	FINISH UNLOADING	ON SITE TESTING		AIR TEMP
			TESTING LAB:		
LEFT PLANT	**ARRIVED JOB**	**START UNLOADING**	**SLUMP**	**CONCRETE TEMP.**	
8:00	8:05				
TOTAL ROUND TRIP	**TOTAL AT JOB**	**UNLOADING TIME**	**AIR**	**CYLINDERS**	

Tax
Prev. AMT
Ticket Total
Grand Total

ADDITIONAL CHARGE 1 _____
ADDITIONAL CHARGE 2 _____
GRAND TOTAL ▶

Truck	Driver	User	Disp Ticket Num	Ticket ID	Time	Date
390108	569696	user	20012820	12766	7:53	6/11/18

Load Size	Mix Code	Returned	Qty	Mix Age	Seq	Load ID
10.00 CYDS	CLSLS				D	14

RB 0021700

Material	Design Qty	Required	Batched	% Var	% Moisture	Actual	Wst
CEMENT	417.00 lb	4170.00 lb	4144.00 lb	-0.62%			
FLYASH	143.00 lb	1430.00 lb	1418.00 lb	-0.84%			
SAND	1223 lb	12719 lb	12730 lb	0.09%	4.00% M	59 gl	
LMSTN1"	1390 lb	13935 lb	13810 lb	-0.15%	0.25% M	4 gl	
GRAVEL3/8"	460 lb	4623 lb	4600 lb	-0.50%	0.50% M	3 gl	
WATER	252 lb	1808 lb	1805 lb	-0.08%		216 gl	
POZZ80	25.00 oz	250.00 oz	250.00 oz	0.00%			
AE-90	3.00 oz	30.00 oz	30.00 oz	0.00%			

46946R4 N 1/3

Actual Load	38585 lb	Num Batches:	1								
Slump:	5.00 in	Design W/C:	0.450	Water/Cement:	0.453	T	Design	302.0 gl	Actual	282.1 gl	To Add: 19.9 gl
Actual W/C Ratio:	0.423	Water In Truck:	0.0 gl	Adjust Water:	0.0 gl	/ Load	Trim Water:	-2.0 gl	/ CYD		
		Actual Water:	282 gl	Batched Cement:	5562 lb		Allowable Water:	148 gl			

KNIFE RIVER
AN MDU RESOURCES COMPANY

SOUTH REGION/MAIN OFFICE
6310 State Highway 21 West
Bryan, TX 77807
PH: (979) 361-2900
FAX: (979) 361-2920

BRYAN
6310 Hwy. 21 West
Bryan, TX 77807
DISPATCH: (979) 361-2931
FAX: (979) 361-2920

B 0042526

Bryan Plant #6

ELLIS-MCGINNIS CONSTRUC
P.O. BOX 40
EDDY

Disp Order#: 2010

SHIP TO:
TAMU TRANSPORTATION INSTITUTE
LF47 LF RELLIS CAMPUS RT AT THE
STOP SIGN 2ND STOP TAKE A LF 2ND
STOP TAKE A RT GO 2 STOP SIGN D
OWN TAKE A LF GO TO MORE STOP SI
GN DOWN TAKE RT GO THE NEXT STOP

TIME	FORMULA	LOAD SIZE	YARDS ORDERED		DRIVER/TRUCK		PLANT TRANSACTION #
8:25:02	CLSLS	10.00	30.00	3801	ROY DAVIS	390143	
DATE		**LOAD #**	**YARDS DEL.**	**BATCH #**	**WATER TRIM**	**SLUMP**	**TICKET NUMBER**
06/11/18	TAMUTRANS	2	20.00			5.00in	6141872

WARNING
IRRITATING TO THE SKIN AND EYES

Contains Portland Cement. Wear Rubber Boots and Gloves, PROLONGED CONTACT MAY CAUSE BURNS. Avoid Contact With Eyes and Prolonged Contact With Skin. In Case of Contact With Skin or Eyes, Flush Thoroughly With Water. If Irritation Persists, Get Medical Attention. **KEEP CHILDREN AWAY.**

CONCRETE is a PERISHABLE COMMODITY and BECOMES THE PROPERTY of the PURCHASER UPON LEAVING the PLANT. ANY CHANGES or CANCELLATION of ORIGINAL INSTRUCTIONS MUST be TELEPHONED to the OFFICE BEFORE LOADING starts.

The undersigned promises to pay all costs, including reasonable attorney's fees, incurred in collecting any sums owed.

All accounts not paid within 30 days of delivery will bear interest at the rate of 18% per annum.

Not Responsible for Reactive Aggregate or Color Quality. No Claim Allowed Unless Made at Time Material is Delivered.

A $15.00 Service Charge and Loss of the Cash Discount will be Collected on all Returned Checks.

Excess Delay Time Charged @ $75.00/hr.

PROPERTY DAMAGE RELEASE
(TO BE SIGNED IF DELIVERY TO BE MADE INSIDE CURB LINE)

Dear Customer - The driver of this truck in presenting this RELEASE to you for your signature is of the opinion that the size and weight of this truck may possibly cause damage to the premises and/or adjacent property if he places the material in this load where you desire it. It is our wish to help you in every way that we can, but in order to do this the driver is requesting that you sign this RELEASE relieving him and this supplier from any responsibility from damage that may occur to the premises and or adjacent property, buildings, sidewalks, drive-ways, curbs, etc., by the delivery of this material, and that you also agree to help him remove mud from the wheels of his vehicle so that he will not litter the public street. Further, as additional consideration, the undersigned agrees to indemnify and hold harmless the driver of this truck and this supplier for any and all damage to the premises and/or adjacent property which may be claimed by anyone to have arisen out of delivery of this order.

SIGNED:

X

Excessive Water is Detrimental to Concrete Performance.
H_2O Added by Request / Authorized By:

GAL X

WEIGHMASTER

Thank you for your business

NOTICE: MY SIGNATURE BELOW INDICATES THAT I HAVE READ THE HEALTH WARNING NOTICE AND SUPPLIER WILL NOT BE RESPONSIBLE FOR ANY DAMAGE CAUSED WHEN DELIVERING INSIDE CURB LINE.

LOAD RECEIVED BY

x

QUANTITY	CODE	DESCRIPTION	OUR MIXES ARE DESIGNED TO ACHIEVE SPECIFICATIONS AT A MAX 4" SLUMP	UNIT PRICE	EXTENDED PRICE
10.00CY	CLSLS	CLASS S 4000 PSI			

RETURNED TO PLANT	LEFT JOB	FINISH UNLOADING	ON SITE TESTING		AIR TEMP
			TESTING LAB:		
LEFT PLANT	**ARRIVED JOB**	**START UNLOADING**	**SLUMP**	**CONCRETE TEMP.**	
8:38	8:47	9:05			
TOTAL ROUND TRIP	**TOTAL AT JOB**	**UNLOADING TIME**	**AIR**	**CYLINDERS**	

Tax
Prev. AMT
Ticket Tot
Grand Tota

ADDITIONAL CHARGE 1 _____

ADDITIONAL CHARGE 2 _____

GRAND TOTAL

Truck 390143 | Driver 554626 | User user | Disp Ticket Num 6141872 | Ticket ID 50317 | Time 8:25 | Date 11/ | B 0042526

Load Size 10.00 CYDS | Mix Code CLSLS | Returned | Qty | Mix Age | Seq D | Load ID 1

Material	Design Qty	Required	Batched	% Var	Moisture	Actual Wat
SAND	1223 lb	12903 lb	12900 lb	-0.02%	5.50% M	81 gl
#8STN1"	1380 lb	13800 lb	13680 lb	-0.87%		
GRAVEL3/8"	460 lb	4669 lb	4700 lb	0.66%	1.50% M	8 gl
CEMENT	417.0 lb	4170.0 lb	4198.0 lb	0.67%		
FLYASH	143.0 lb	1430.0 lb	1444.0 lb	0.98%		
WATER	30.3 gl	194.1 gl	193.9 gl	-0.12%		193.9 gl
WRE-90	3.00 oz	30.00 oz	30.00 oz	0.00%		
DAZ80	25.00 oz	250.00 oz	250.00 oz	0.00%		

Actual Nue Batches: 1 | Manual 8:25:02

Load Total: 38558 lb Design W/C: 0.452 Water/Cement: 0.448 T Design Water: 303.0 gl Actual Water: 282.8 gl To Add: 20.2 gl

Slump: 5.00 in Water in Truck: 0.0 gl Adjust Water: 0.0 gl/ Load Trim Water: -2.0 gl/ CYDS

46 T/60.4

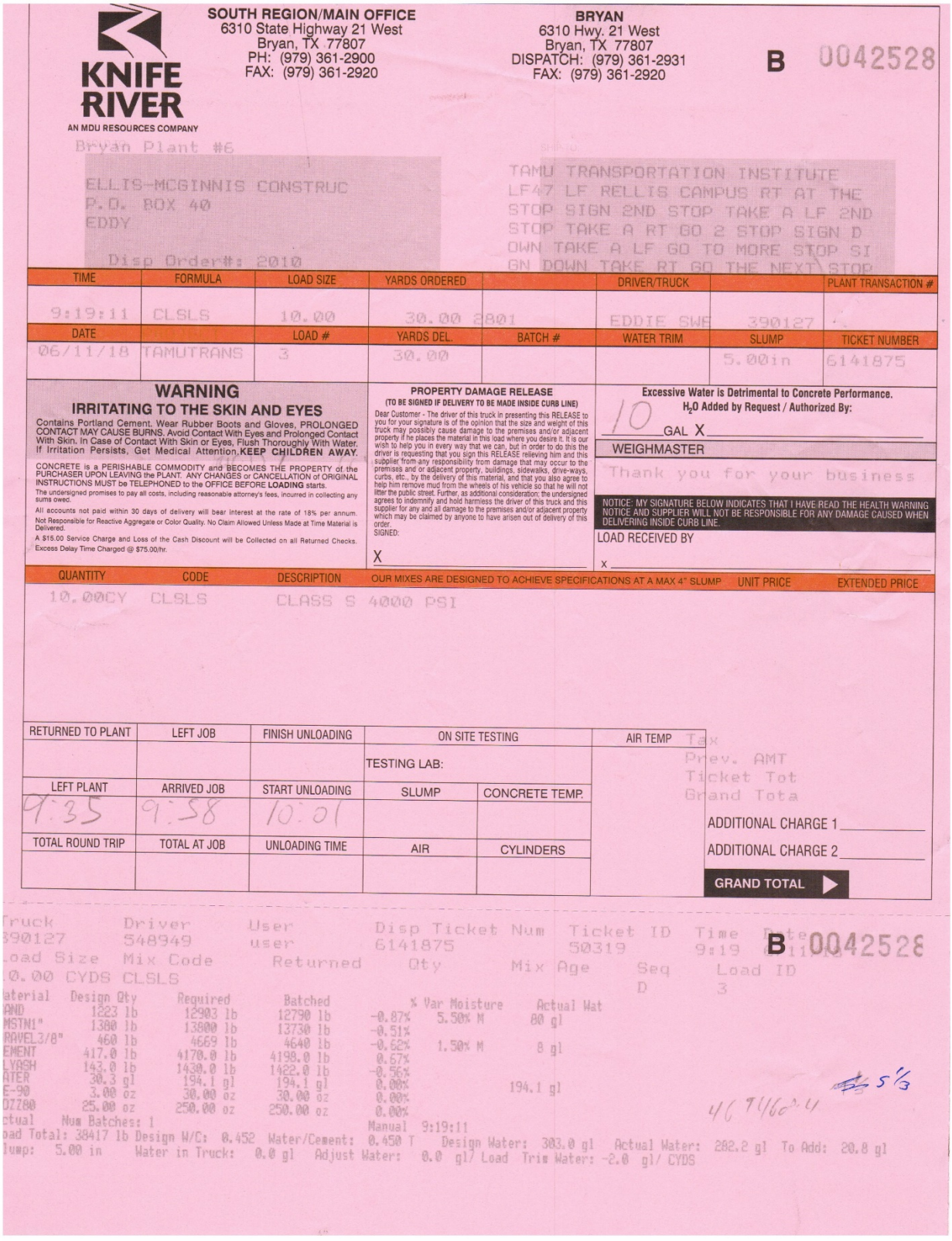

KNIFE RIVER
AN MDU RESOURCES COMPANY

SOUTH REGION/MAIN OFFICE
6310 State Highway 21 West
Bryan, TX 77807
PH: (979) 361-2900
FAX: (979) 361-2920

BRYAN
6310 Hwy. 21 West
Bryan, TX 77807
DISPATCH: (979) 361-2931
FAX: (979) 361-2920

B 0042528

Bryan Plant #6

ELLIS-MCGINNIS CONSTRUC
P.O. BOX 40
EDDY

Disp Order#: 2010

TAMU TRANSPORTATION INSTITUTE
LF47 LF RELLIS CAMPUS RT AT THE
STOP SIGN 2ND STOP TAKE A LF 2ND
STOP TAKE A RT GO 2 STOP SIGN D
OWN TAKE A LF GO TO MORE STOP SI
GN DOWN TAKE RT GO THE NEXT STOP

TIME	FORMULA	LOAD SIZE	YARDS ORDERED		DRIVER/TRUCK		PLANT TRANSACTION #
9:19:11	CLSLS	10.00	30.00	2801	EDDIE SWE	390127	
DATE		**LOAD #**	**YARDS DEL.**	**BATCH #**	**WATER TRIM**	**SLUMP**	**TICKET NUMBER**
06/11/18	TAMUTRANS	3	30.00			5.00in	6141875

WARNING
IRRITATING TO THE SKIN AND EYES
Contains Portland Cement. Wear Rubber Boots and Gloves, PROLONGED CONTACT MAY CAUSE BURNS. Avoid Contact With Eyes and Prolonged Contact With Skin. In Case of Contact With Skin or Eyes, Flush Thoroughly With Water. If Irritation Persists, Get Medical Attention. **KEEP CHILDREN AWAY.**

CONCRETE is a PERISHABLE COMMODITY and BECOMES THE PROPERTY of the PURCHASER UPON LEAVING the PLANT. ANY CHANGES or CANCELLATION of ORIGINAL INSTRUCTIONS MUST be TELEPHONED to the OFFICE BEFORE **LOADING** starts.
The undersigned promises to pay all costs, including reasonable attorney's fees, incurred in collecting any sums owed.
All accounts not paid within 30 days of delivery will bear interest at the rate of 18% per annum.
Not Responsible for Reactive Aggregate or Color Quality. No Claim Allowed Unless Made at Time Material is Delivered.
A $15.00 Service Charge and Loss of the Cash Discount will be Collected on all Returned Checks.
Excess Delay Time Charged @ $75.00/hr.

PROPERTY DAMAGE RELEASE
(TO BE SIGNED IF DELIVERY TO BE MADE INSIDE CURB LINE)
Dear Customer - The driver of this truck in presenting this RELEASE to you for your signature is of the opinion that the size and weight of this truck may possibly cause damage to the premises and/or adjacent property if he places the material in this load where you desire it. It is our wish to help you in every way that we can, but in order to do this the driver is requesting that you sign this RELEASE relieving him and this supplier from any responsibility from damage that may occur to the premises and or adjacent property, buildings, sidewalks, drive-ways, curbs, etc., by the delivery of this material, and that you also agree to help him remove mud from the wheels of his vehicle so that he will not litter the public street. Further, as additional consideration; the undersigned agrees to indemnify and hold harmless the driver of this truck and this supplier for any and all damage to the premises and/or adjacent property which may be claimed by anyone to have arisen out of delivery of this order.
SIGNED:
X

Excessive Water is Detrimental to Concrete Performance.
H_2O Added by Request / Authorized By:
10 GAL X
WEIGHMASTER
Thank you for your business
NOTICE: MY SIGNATURE BELOW INDICATES THAT I HAVE READ THE HEALTH WARNING NOTICE AND SUPPLIER WILL NOT BE RESPONSIBLE FOR ANY DAMAGE CAUSED WHEN DELIVERING INSIDE CURB LINE.
LOAD RECEIVED BY
X

QUANTITY	CODE	DESCRIPTION	UNIT PRICE	EXTENDED PRICE
10.00CY	CLSLS	CLASS S 4000 PSI		

OUR MIXES ARE DESIGNED TO ACHIEVE SPECIFICATIONS AT A MAX 4" SLUMP

RETURNED TO PLANT	LEFT JOB	FINISH UNLOADING	ON SITE TESTING		AIR TEMP
			TESTING LAB:		
LEFT PLANT	**ARRIVED JOB**	**START UNLOADING**	**SLUMP**	**CONCRETE TEMP.**	
9:35	9:58	10:01			
TOTAL ROUND TRIP	**TOTAL AT JOB**	**UNLOADING TIME**	**AIR**	**CYLINDERS**	

Tax
Prev. AMT
Ticket Tot
Grand Tota

ADDITIONAL CHARGE 1
ADDITIONAL CHARGE 2
GRAND TOTAL

Truck 390127 | Driver 548949 | User user | Disp Ticket Num 6141875 | Ticket ID 50319 | Time 9:19 | Date 11 | B 0042528

Load Size 10.00 CYDS | Mix Code CLSLS | Returned | Qty | Mix Age | Seq D | Load ID 3

Material	Design Qty	Required	Batched	% Var	Moisture	Actual Wat
SAND	1223 lb	12903 lb	12790 lb	-0.87%	5.50% M	80 gl
#MSTN1"	1380 lb	13800 lb	13730 lb	-0.51%		
GRAVEL3/8"	460 lb	4669 lb	4640 lb	-0.62%	1.50% M	8 gl
CEMENT	417.0 lb	4170.0 lb	4198.0 lb	0.67%		
FLYASH	143.0 lb	1430.0 lb	1422.0 lb	-0.56%		
WATER	30.3 gl	194.1 gl	194.1 gl	0.00%		194.1 gl
AE-90	3.00 oz	30.00 oz	30.00 oz	0.00%		
DZ780	25.00 oz	250.00 oz	250.00 oz	0.00%		

Actual Num Batches: 1 Manual 9:19:11

Load Total: 38417 lb Design W/C: 0.452 Water/Cement: 0.450 T Design Water: 303.0 gl Actual Water: 282.2 gl To Add: 20.8 gl

Slump: 5.00 in Water in Truck: 0.0 gl Adjust Water: 0.0 gl/ Load Trim Water: -2.0 gl/ CYDS

5 1/3

D.3 *MASH* TEST 3-10 (CRASH TEST NO. 469468-4-1)

D.3.1 Vehicle Properties and Information

Table D.1. Vehicle Properties for Test No. 469468-4-1.

Date:	2018-08-03	Test No.:	469468-4-1	VIN No.:	KNADE223496504354
Year:	2009	Make:	Kia	Model:	Rio
Tire Inflation Pressure:	32 psi	Odometer:	100354	Tire Size:	185/65R14

Describe any damage to the vehicle prior to test: None

● Denotes accelerometer location.

NOTES: None

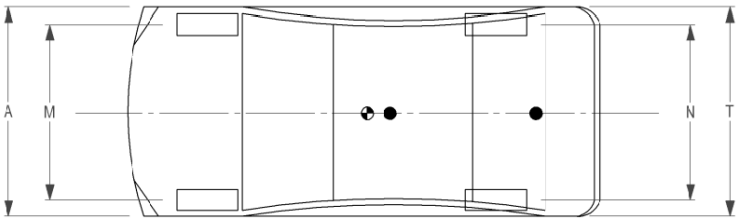

Engine Type: 4 cylinder
Engine CID: 1.6 L
Transmission Type:
☑ Auto or ☐ Manual
☑ FWD ☐ RWD ☐ 4WD
Optional Equipment:

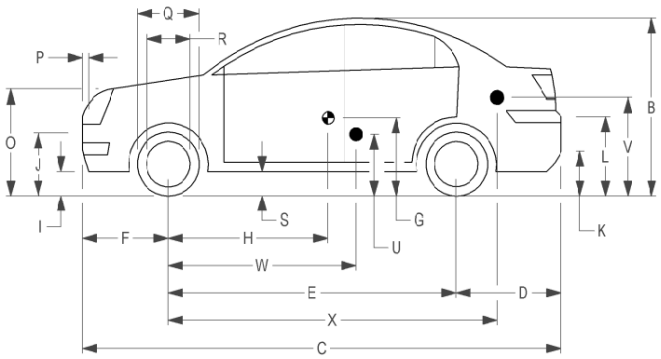

Dummy Data:
Type: 50th percentile male
Mass: 165 lb
Seat Position: DRIVER SIDE

Geometry: inches

A	66.38	F	33.00	K	12.25	P	4.12	U	15.25
B	51.50	G		L	25.25	Q	22.50	V	21.25
C	165.75	H	35.72	M	57.75	R	15.50	W	35.70
D	34.00	I	7.75	N	57.70	S	8.25	X	101.00
E	98.75	J	21.50	O	28.25	T	66.20		
	Wheel Center Ht Front		11.00		Wheel Center Ht Rear		11.00	W-H	-0.02

RANGE LIMIT: A = 65 ±3 inches; C = 169 ±8 inches; E = 98 ±5 inches; F = 35 ±4 inches; H = 39 ±4 inches; O = TOP OF RADIATOR SUPPORT ~~(24 ±4 inches)~~;
M+N/2 = 56 ±2 inches; W-H < 2 inches or use MASH Paragraph A4.3.2

GVWR Ratings:		**Mass:** lb	Curb	Test Inertial	Gross Static
Front	1718	M_{front}	1575	1551	1636
Back	1874	M_{rear}	889	879	959
Total	3638	M_{Total}	2464	2430	2595

Allowable TIM = 2420 lb ±55 lb | Allowable GSM = 2585 lb ± 55 lb

Mass Distribution:
lb LF: 775 RF: 776 LR: 458 RR: 421

Table D.2. Exterior Crush Measurements of Vehicle for Test No. 469468-4-1.

Date: 2018-08-03 Test No.: 469468-4-1 VIN No.: KNADE223496504354

Year: 2009 Make: Kia Model: Rio

VEHICLE CRUSH MEASUREMENT SHEET[1]

Complete When Applicable	
End Damage	Side Damage
Undeformed end width _____	Bowing: B1 _____ X1 _____
Corner shift: A1 _____	B2 _____ X2 _____
A2 _____	
End shift at frame (CDC)	Bowing constant
(check one)	$\frac{X1+X2}{2}$ = _____
< 4 inches _____	
≥ 4 inches _____	

Note: Measure C_1 to C_6 from Driver to Passenger Side in Front or Rear Impacts – Rear to Front in Side Impacts.

Specific Impact Number	Plane* of C-Measurements	Direct Damage		Field L***	C_1	C_2	C_3	C_4	C_5	C_6	±D
		Width** (CDC)	Max**** Crush								
1	AT FT BUMPER	16	8	14	8	6	4				-18
2	ABOVE FT BUMPER	16	10	42	1	1	2	3	6	10	+45
	Measurements recorded										
×	☐ **inches or** ☐ **mm**										

[1]Table taken from National Accident Sampling System (NASS).

*Identify the plane at which the C-measurements are taken (e.g., at bumper, above bumper, at sill, above sill, at beltline, etc.) or label adjustments (e.g., free space).

Free space value is defined as the distance between the baseline and the original body contour taken at the individual C locations. This may include the following: bumper lead, bumper taper, side protrusion, side taper, etc. Record the value for each C-measurement and maximum crush.

**Measure and document on the vehicle diagram the beginning or end of the direct damage width and field L (e.g., side damage with respect to undamaged axle).

***Measure and document on the vehicle diagram the location of the maximum crush.

Note: Use as many lines/columns as necessary to describe each damage profile.

Table D.3. Occupant Compartment Measurements of Vehicle for Test No. 469468-4-1.

Date:	2018-08-03	Test No.:	469468-4-1	VIN No.:	KNADE223496504354
Year:	2009	Make:	Kia	Model:	Rio

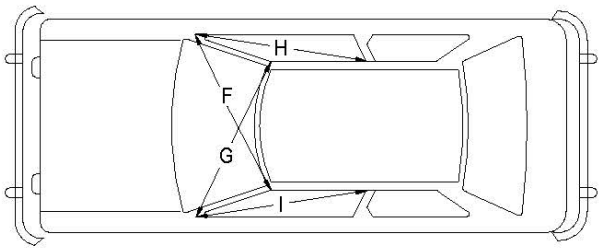

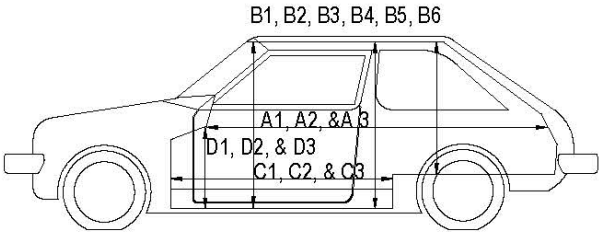

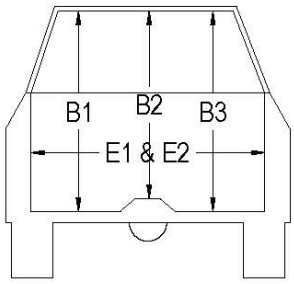

*Lateral area across the cab from driver's side kick panel to passenger's side kick panel.

OCCUPANT COMPARTMENT DEFORMATION MEASUREMENT

	Before	After (inches)	Differ.
A1	67.50	67.50	0.00
A2	67.25	67.25	0.00
A3	67.75	67.75	0.00
B1	40.50	40.50	0.00
B2	39.00	39.00	0.00
B3	40.50	40.50	0.00
B4	36.25	36.25	0.00
B5	36.00	36.00	0.00
B6	36.25	36.25	0.00
C1	26.00	22.50	-3.50
C2	0.00	0.00	0.00
C3	26.00	26.00	0.00
D1	9.50	8.00	-1.50
D2	0.00	0.00	0.00
D3	9.50	9.50	0.00
E1	51.50	53.00	1.50
E2	51.00	52.50	1.50
F	51.00	51.00	0.00
G	51.00	51.00	0.00
H	37.50	37.50	0.00
I	37.50	37.50	0.00
J*	51.00	50.00	-1.00

D.3.2 Sequential Photographs

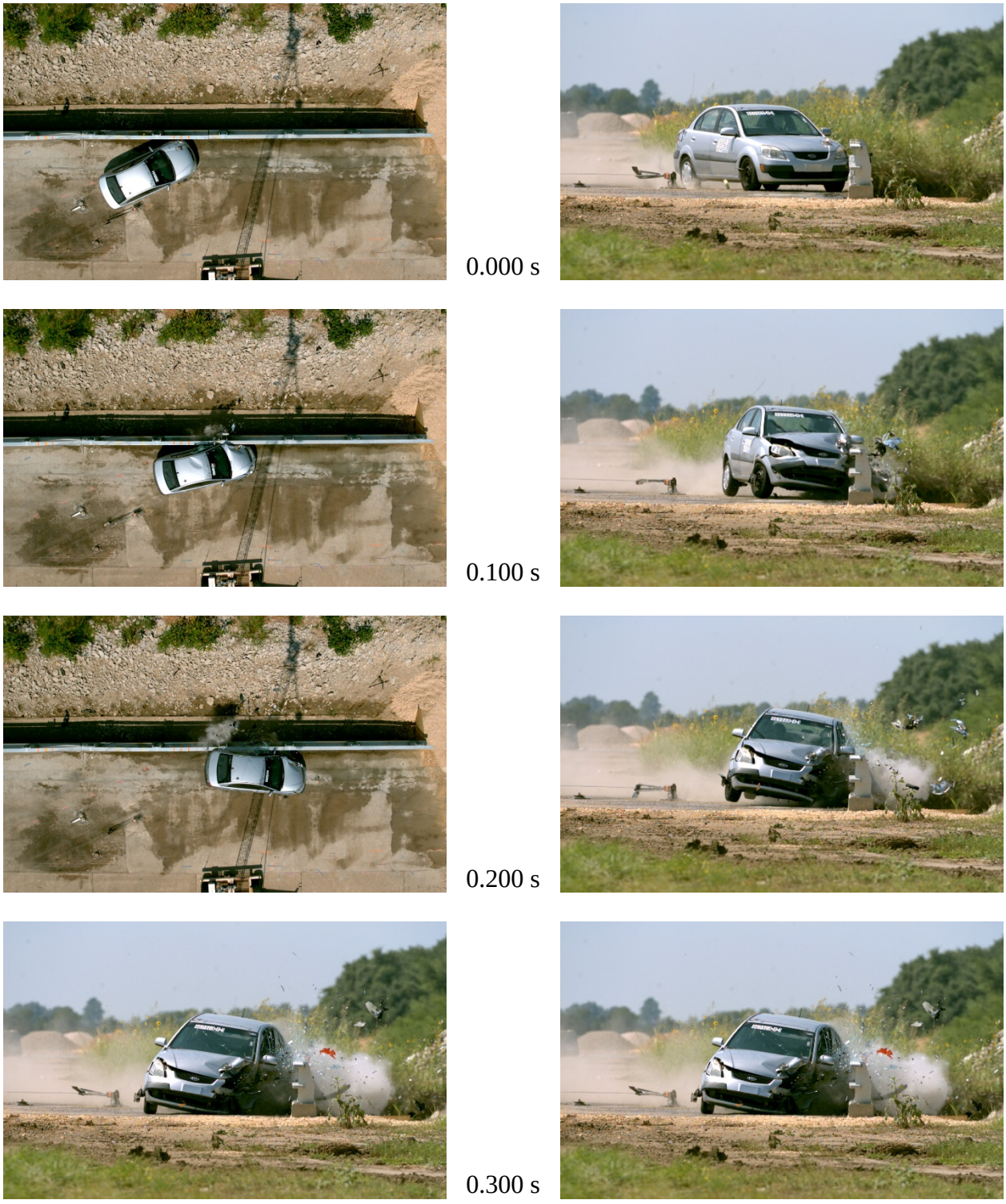

Figure D.1. Sequential Photographs for Test No. 469468-4-1 (Gut and Overhead Views).

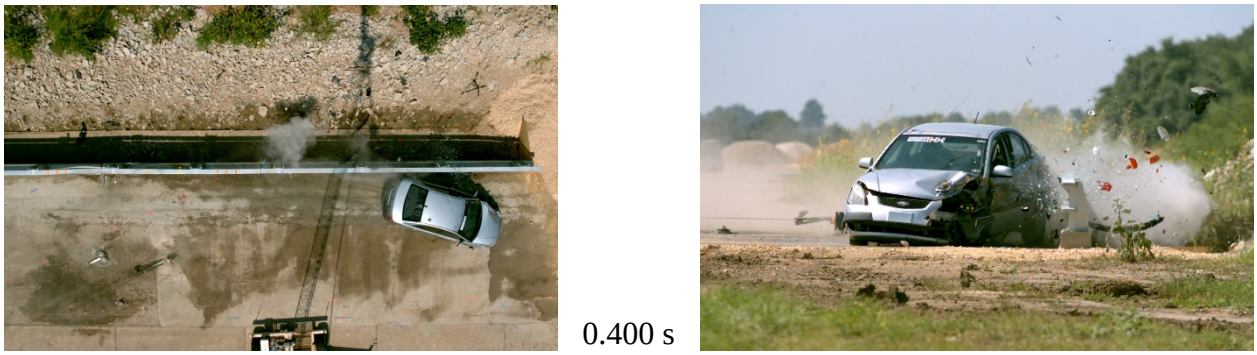
0.400 s


0.500 s


0.600 s

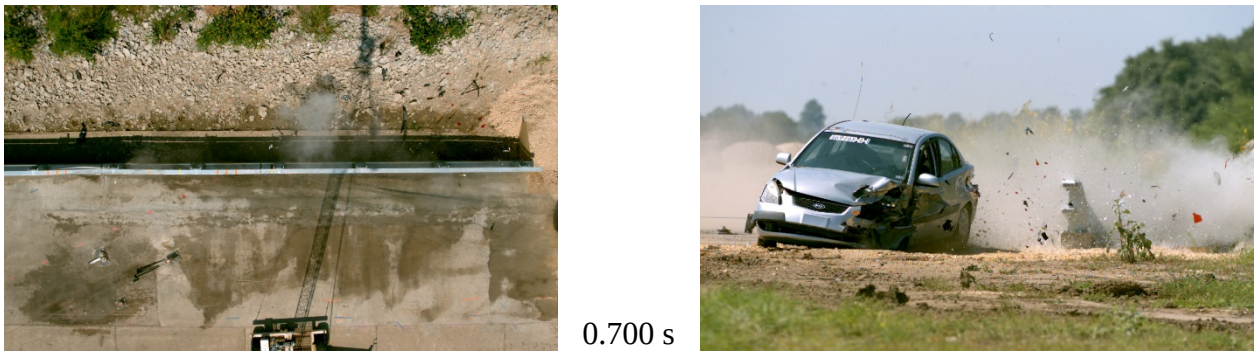
0.700 s

Figure D.1. Sequential Photographs for Test No. 469468-4-1 (Gut and Overhead Views) (Continued).


0.000 s


0.400 s



0.100 s


0.500 s



0.200 s


0.600 s



0.300 s


0.700 s

Figure D.2. Sequential Photographs for Test No. 469468-4-1 (Rear View).

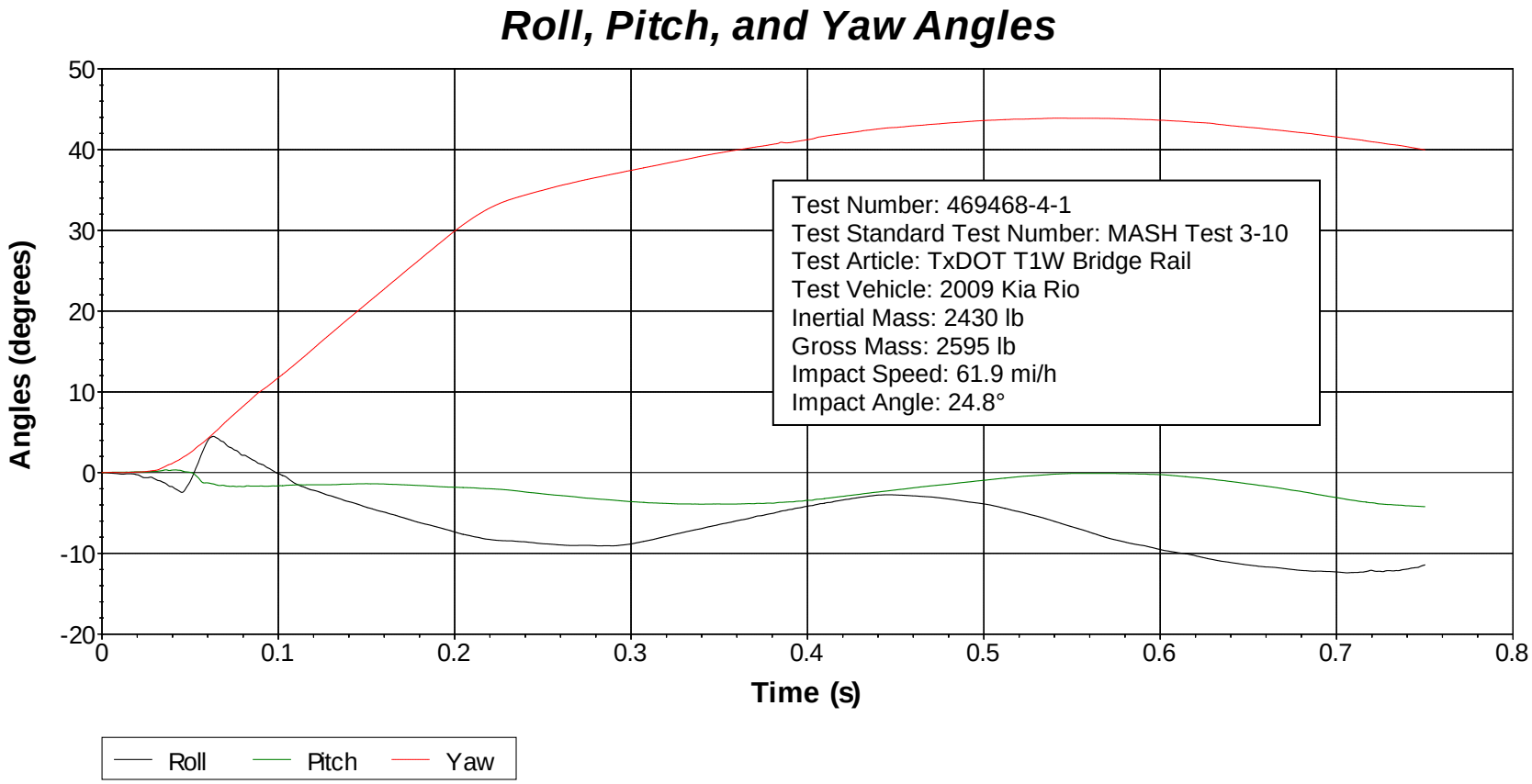

Axes are vehicle-fixed.
Sequence for determining orientation:

1. Yaw.
2. Pitch.
3. Roll.

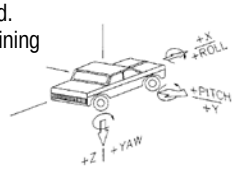

Figure D.3. Vehicle Angular Displacements for Test No. 469468-3-1.

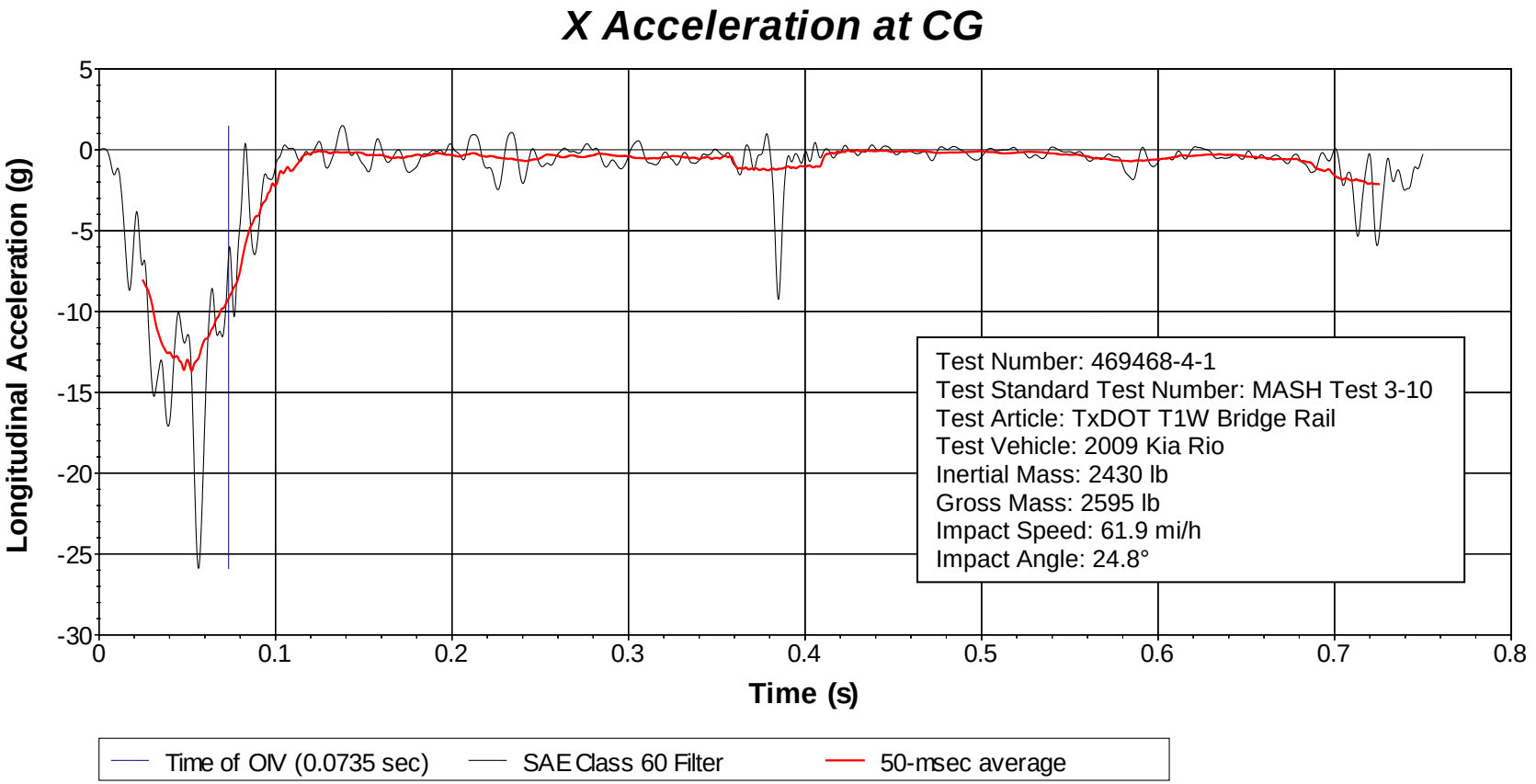

Figure D.4. Vehicle Longitudinal Accelerometer Trace for Test No. 469468-4-1 (Accelerometer Located at Center of Gravity).

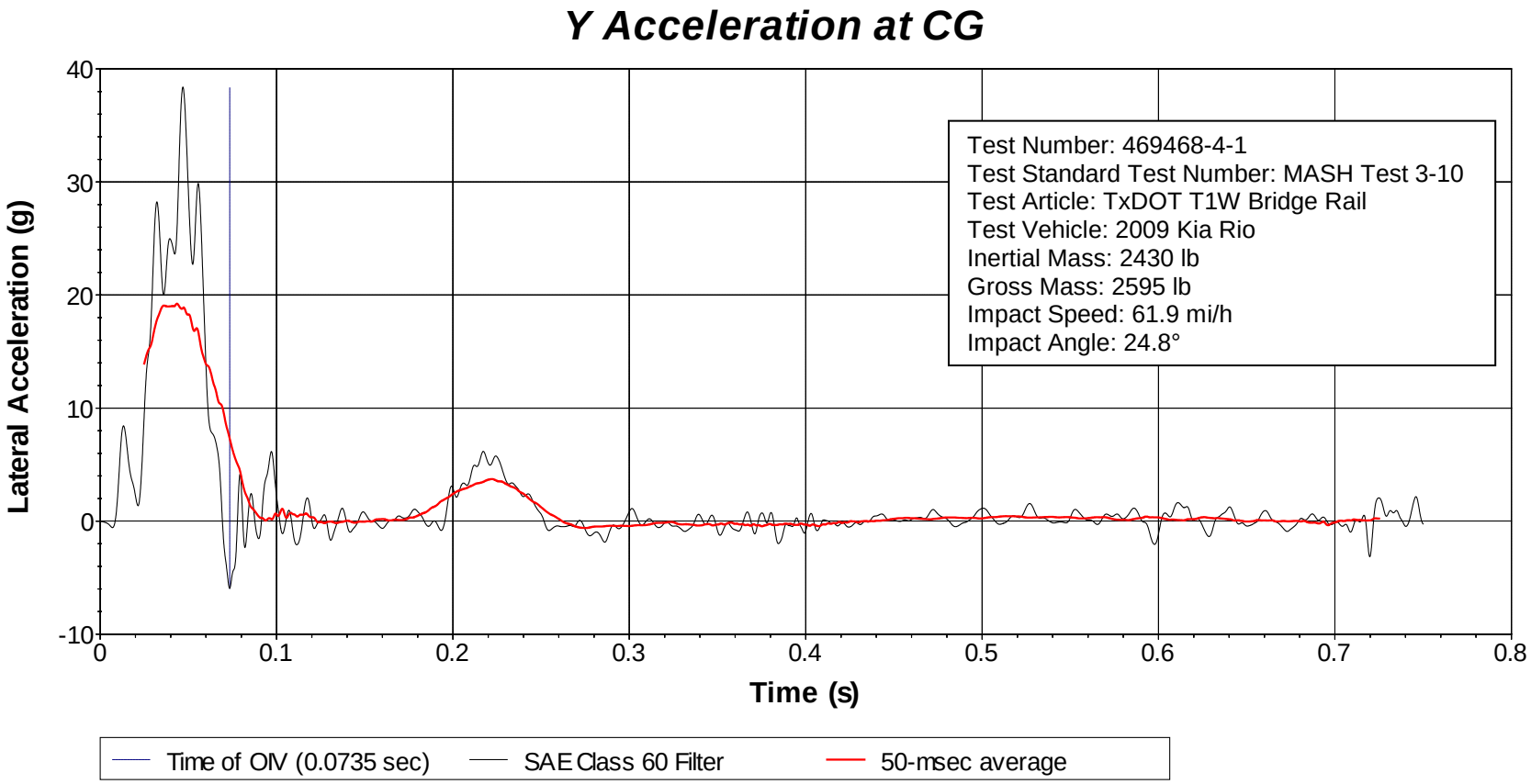

Figure D.5. Vehicle Lateral Accelerometer Trace for Test No. 469468-4-1 (Accelerometer Located at Center of Gravity).

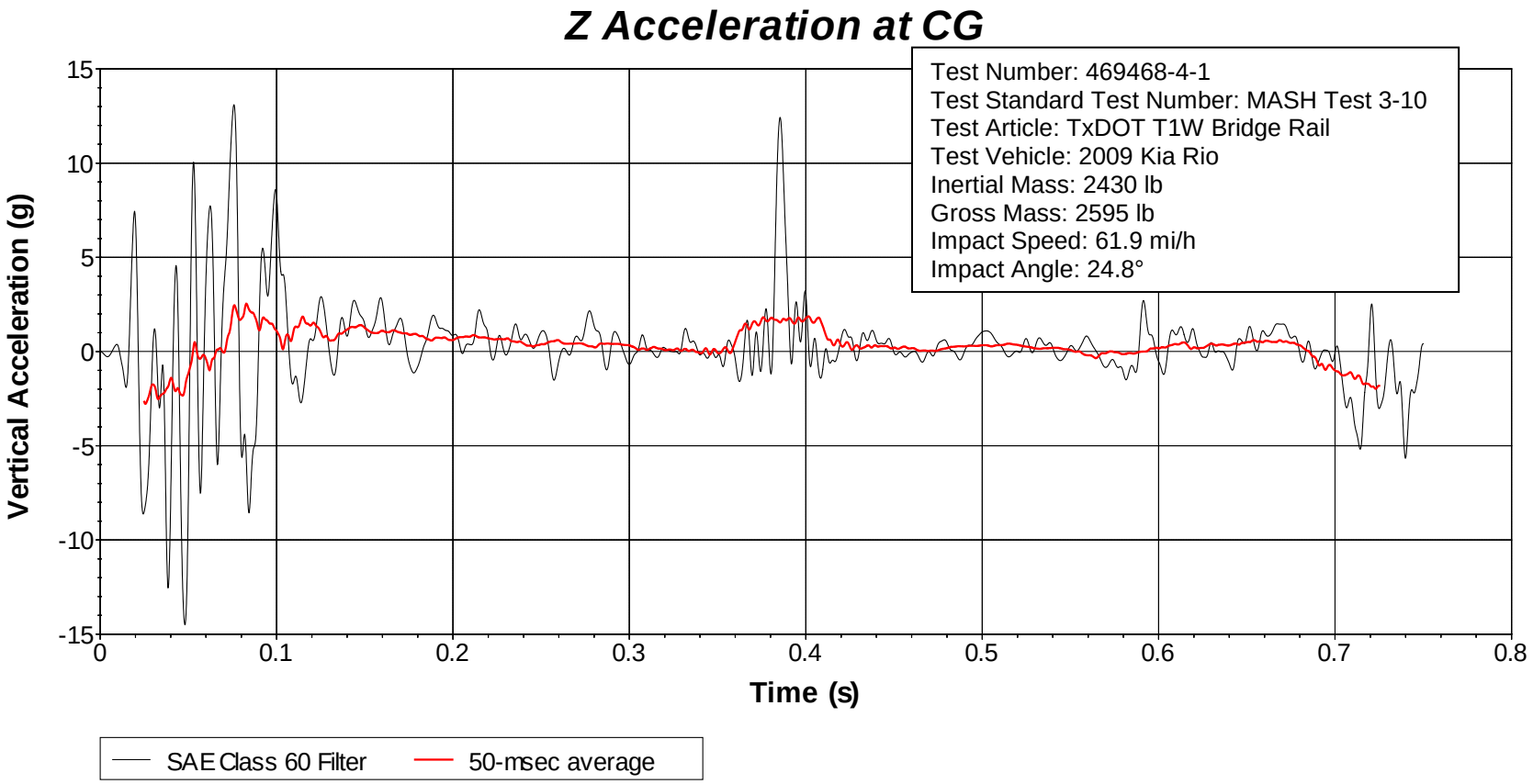

Figure D.6. Vehicle Vertical Accelerometer Trace for Test No. 469468-4-1 (Accelerometer Located at Center of Gravity).

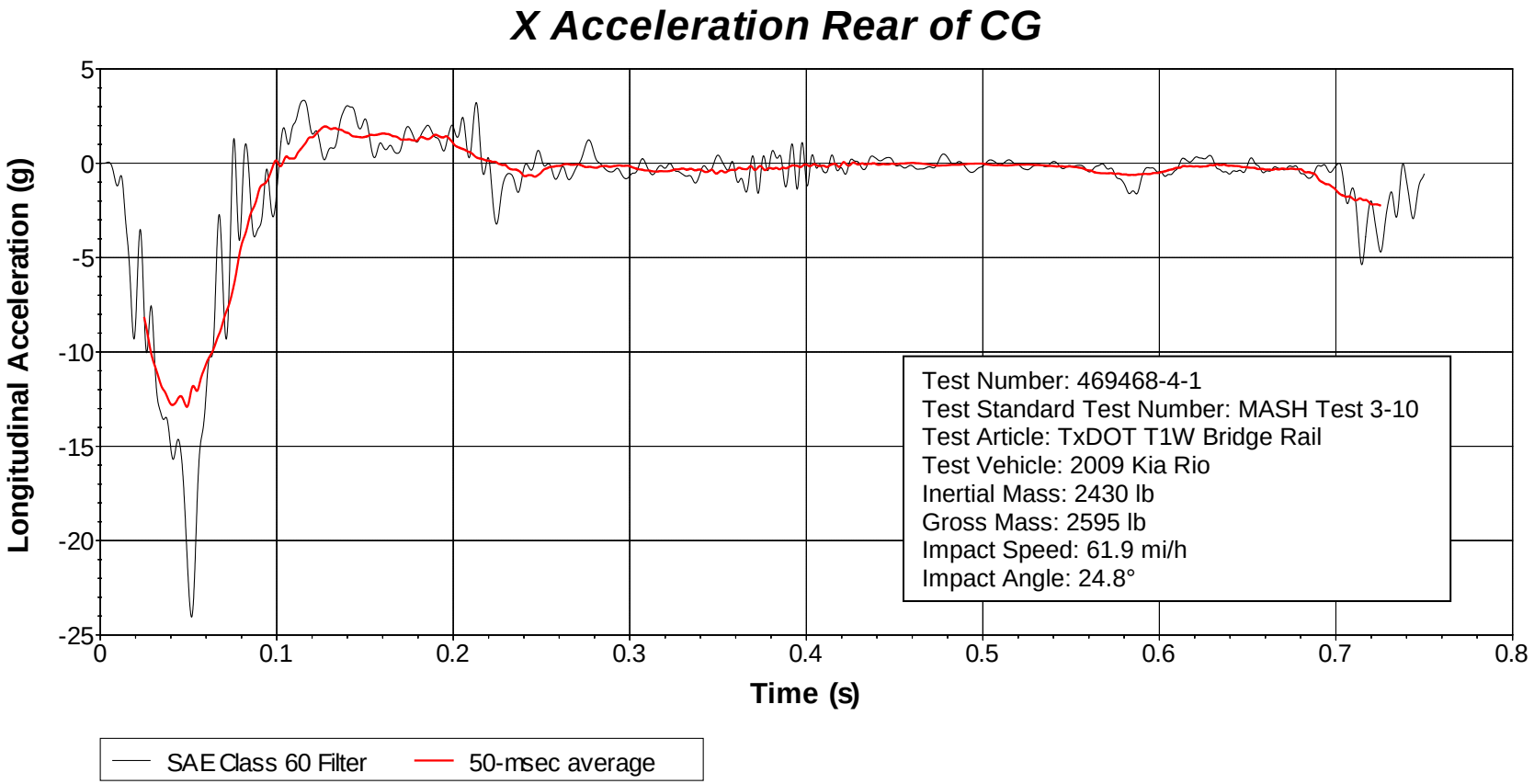

Figure D.7. Vehicle Longitudinal Accelerometer Trace for Test No. 469468-4-1 (Accelerometer Located Rear of Center of Gravity).

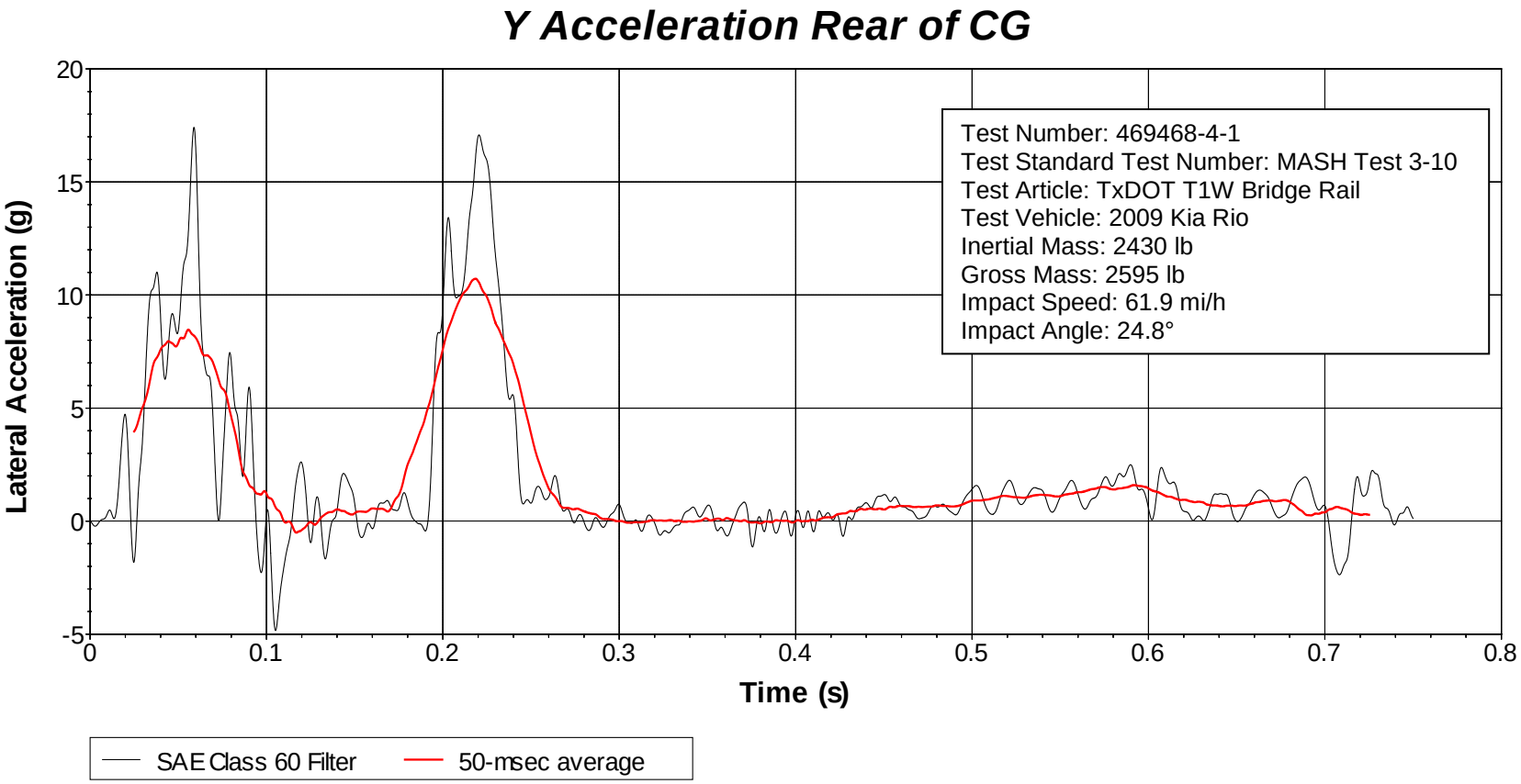

Figure D.8. Vehicle Lateral Accelerometer Trace for Test No. 469468-4-1 (Accelerometer Located Rear of Center of Gravity).

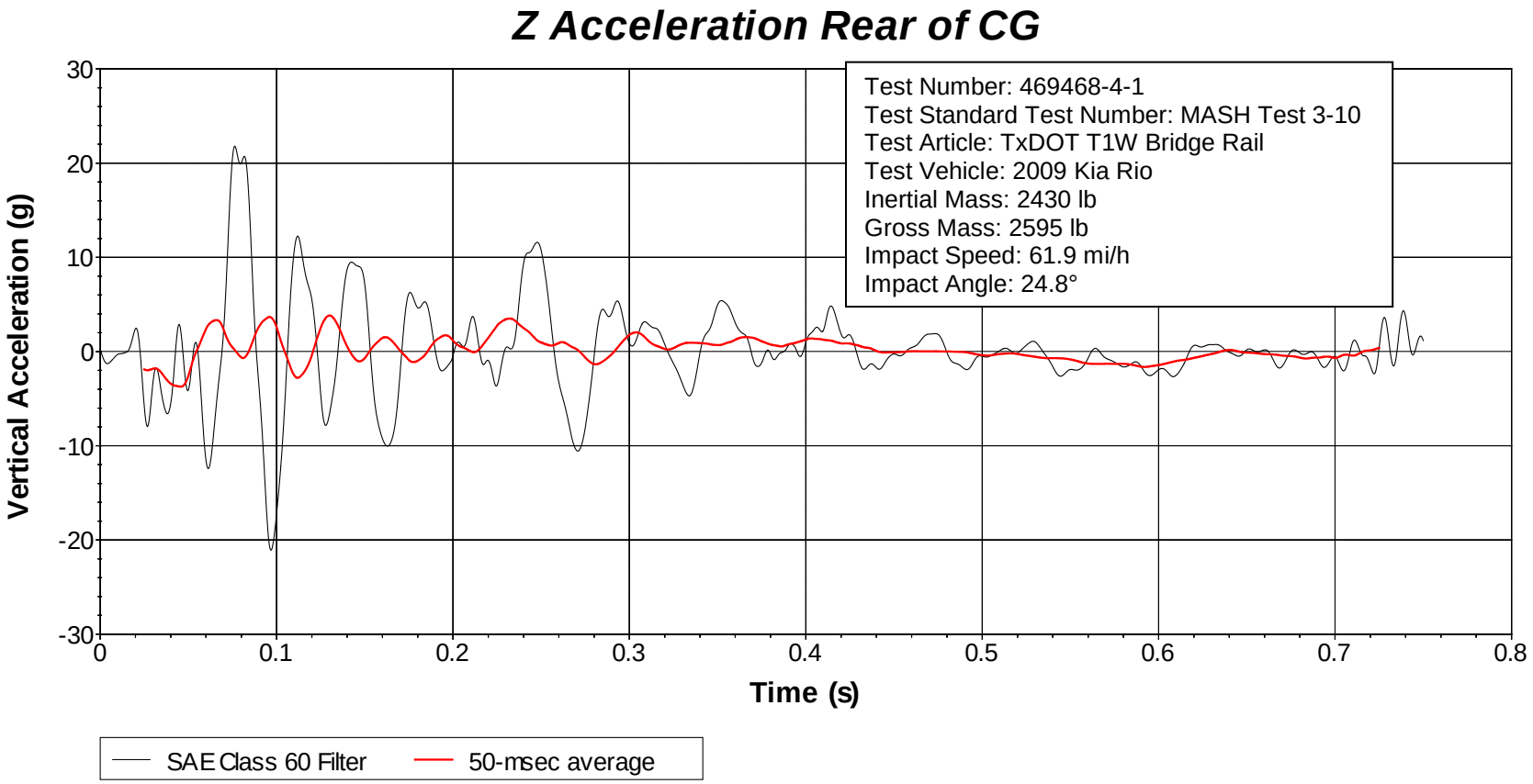

Figure D.9. Vehicle Vertical Accelerometer Trace for Test No. 469468-4-1 (Accelerometer Located Rear of Center of Gravity).

D.4 *MASH* TEST 3-11 (CRASH TEST NO. 469468-4-2)

D.4.1 Vehicle Properties and Information

Table D.4. Vehicle Properties for Test No. 469468-3-2.

Date: 2018-08-01 Test No.: 469468-4-2 VIN No.: 1C6RD6GP6CS255320

Year: 2012 Make: Dodge Model: RAM 1500

Tire Size: 265/70 R 17 Tire Inflation Pressure: 35 psi

Tread Type: Highway Odometer: 249622

Note any damage to the vehicle prior to test: None

● Denotes accelerometer location.

NOTES: None

Engine Type: V-8
Engine CID: 4.7 liter

Transmission Type:
☑ Auto or ☐ Manual
☐ FWD ☑ RWD ☐ 4WD

Optional Equipment:
None

Dummy Data:
Type: None
Mass: 0 lb
Seat Position: NA

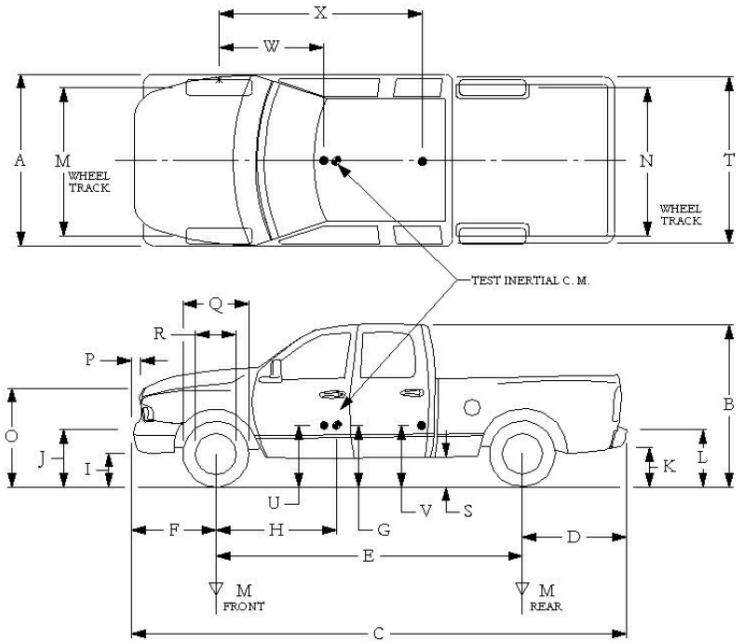

Geometry: inches

A	78.50	F	40.00	K	20.00	P	3.00	U	26.50
B	74.00	G	28.00	L	30.00	Q	30.50	V	30.25
C	227.50	H	62.41	M	68.50	R	18.00	W	62.40
D	44.00	I	11.75	N	68.00	S	13.00	X	79.00
E	140.50	J	27.00	O	46.00	T	77.00		

Wheel Center Height Front	14.75	Wheel Well Clearance (Front)	6.00	Bottom Frame Height - Front	12.50
Wheel Center Height Rear	14.75	Wheel Well Clearance (Rear)	9.25	Bottom Frame Height - Rear	22.50

RANGE LIMIT: A=78 ±2 inches; C=237 ±13 inches; E=148 ±12 inches; F=39 ±3 inches; G = > 28 inches; H = 63 ±4 inches; O=43 ±4 inches; M+N/2=67 ±1.5 inches

GVWR Ratings:		**Mass:** lb	Curb	Test Inertial	Gross Static
Front	3700	M_{front}	2852	2780	2780
Back	3900	M_{rear}	2025	2222	2222
Total	6700	M_{Total}	4877	5002	5002

(Allowable Range for TIM and GSM = 5000 lb ±110 lb)

Mass Distribution:
lb LF: 1400 RF: 1380 LR: 1107 RR: 1115

Table D.5. Measurements of Vehicle Vertical CG for Test No. 469468-4-2.

Date: 2018-08-01 Test No.: 469468-4-2 VIN: 1C6RD6GP6CS255320

Year: 2012 Make: Dodge Model: RAM 1500

Body Style: Quad Cab Mileage: 249622

Engine: 4.7 liter V-8 Transmission: Automatic

Fuel Level: Empty Ballast: 171 (440 lb max)

Tire Pressure: Front: 35 psi Rear: 35 psi Size: 265/70 R 17

Measured Vehicle Weights: (lb)

LF:	1400	RF:	1380	Front Axle:	2780
LR:	1107	RR:	1115	Rear Axle:	2222
Left:	2507	Right:	2495	Total:	5002
					5000 ±110 lb allowed

Wheel Base: 140.50 inches (148 ±12 inches allowed) Track: F: 68.50 inches R: 68.00 inches (Track = (F+R)/2 = 67 ±1.5 inches allowed)

Center of Gravity, SAE J874 Suspension Method

X:	62.41 inches	Rear of Front Axle	(63 ±4 inches allowed)
Y:	-0.08 inches	Left - Right +	of Vehicle Centerline
Z:	28.00 inches	Above Ground	(minumum 28.0 inches allowed)

Hood Height: 46.00 inches (43 ±4 inches allowed) Front Bumper Height: 27.00 inches

Front Overhang: 40.00 inches (39 ±3 inches allowed) Rear Bumper Height: 30.00 inches

Overall Length: 227.50 inches (237 ±13 inches allowed)

Table D.6. Exterior Crush Measurements of Vehicle for Test No. 469468-4-2.

Date:	2018-08-01	Test No.:	469468-4-2	VIN No.:	1C6RD6GP6CS255320
Year:	2012	Make:	Dodge	Model:	RAM 1500

VEHICLE CRUSH MEASUREMENT SHEET[1]

Complete When Applicable	
End Damage	Side Damage
Undeformed end width _____	Bowing: B1 _____ X1 _____
Corner shift: A1 _____	B2 _____ X2 _____
A2 _____	
End shift at frame (CDC)	Bowing constant
(check one)	$\frac{X1+X2}{2}$ = _____
< 4 inches _____	
≥ 4 inches _____	

Note: Measure C_1 to C_6 from Driver to Passenger Side in Front or Rear Impacts – Rear to Front in Side Impacts.

Specific Impact Number	Plane* of C-Measurements	Direct Damage		Field L***	C_1	C_2	C_3	C_4	C_5	C_6	±D
		Width** (CDC)	Max**** Crush								
1	AT FT BUMPER	20	11	36	11	8	4.5	2.75	2	1	-10
2	ABOVE FT BUMPER	20	12	52	1	2	3	4	6	12	+67
	Measurements recorded										
	☑ inches or ☐ mm										

[1]Table taken from National Accident Sampling System (NASS).

*Identify the plane at which the C-measurements are taken (e.g., at bumper, above bumper, at sill, above sill, at beltline, etc.) or label adjustments (e.g., free space).

Free space value is defined as the distance between the baseline and the original body contour taken at the individual C locations. This may include the following: bumper lead, bumper taper, side protrusion, side taper, etc. Record the value for each C-measurement and maximum crush.

**Measure and document on the vehicle diagram the beginning or end of the direct damage width and field L (e.g., side damage with respect to undamaged axle).

***Measure and document on the vehicle diagram the location of the maximum crush.

Note: Use as many lines/columns as necessary to describe each damage profile.

Table D.7. Occupant Compartment Measurements of Vehicle for Test No. 469468-4-2.

Date:	2018-08-01	Test No.:	469468-4-2	VIN No.:	1C6RD6GP6CS255320
Year:	2012	Make:	Dodge	Model:	RAM 1500

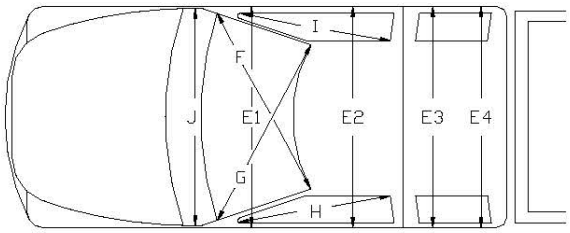

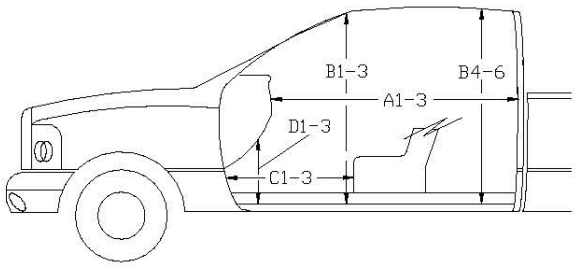

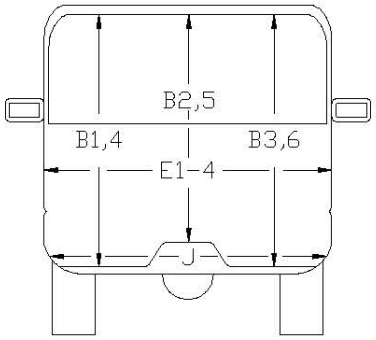

*Lateral area across the cab from driver's side kickpanel to passenger's side kickpanel.

OCCUPANT COMPARTMENT DEFORMATION MEASUREMENT

	Before	After (inches)	Differ.
A1	65.00	65.00	0.00
A2	63.00	63.00	0.00
A3	65.50	65.50	0.00
B1	45.00	45.00	0.00
B2	38.00	38.00	0.00
B3	45.00	45.00	0.00
B4	39.50	39.50	0.00
B5	43.00	43.00	0.00
B6	39.50	39.50	0.00
C1	26.00	23.00	-3.00
C2	0.00	0.00	0.00
C3	26.00	26.00	0.00
D1	11.00	11.00	0.00
D2	0.00	0.00	0.00
D3	11.50	11.50	0.00
E1	58.50	58.75	0.25
E2	63.50	63.50	0.00
E3	63.50	63.50	0.00
E4	63.50	63.50	0.00
F	59.00	59.00	0.00
G	59.00	59.00	0.00
H	37.50	37.50	0.00
I	37.50	37.50	0.00
J*	25.00	24.75	-0.25

D.4.2 Sequential Photographs

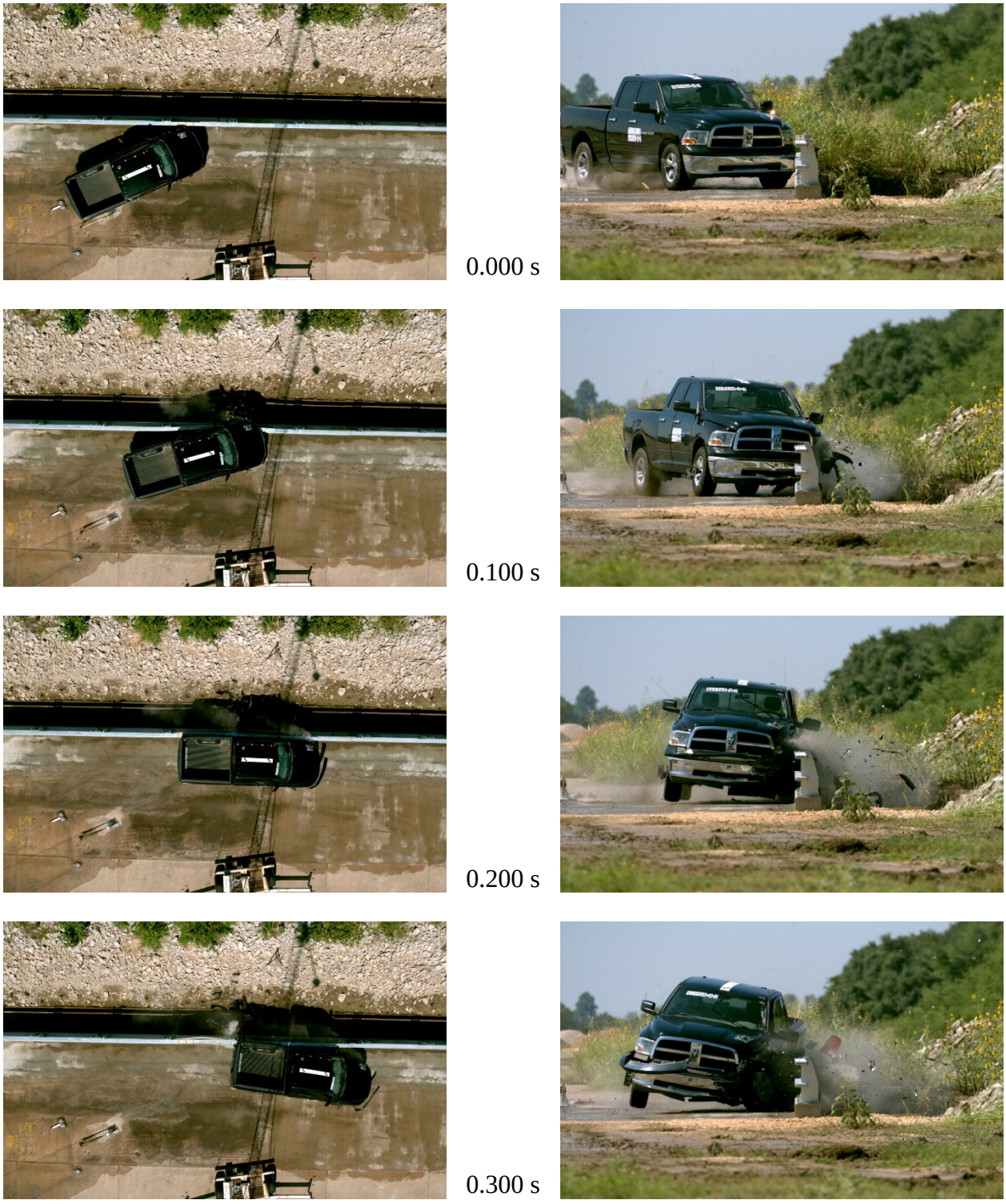

Figure D.10. Sequential Photographs for Test No. 469468-4-2 (Gut and Overhead Views).

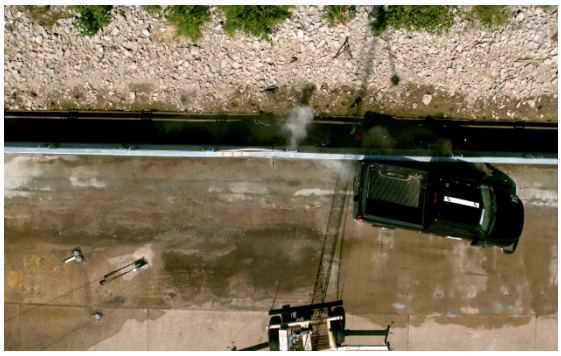


0.400 s




0.500 s

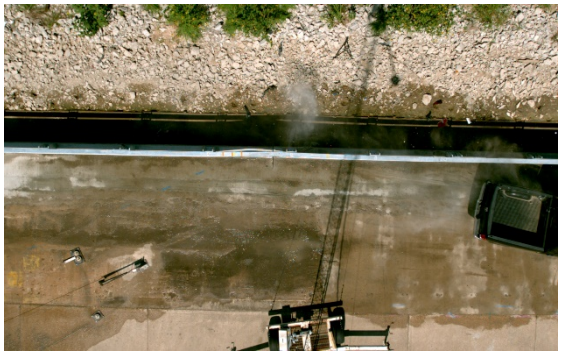


0.600 s




0.700 s

Figure D.10. Sequential Photographs for Test No. 469468-4-2 (Gut and Overhead Views) (Continued).


0.000 s


0.400 s


0.100 s


0.500 s


0.200 s


0.600 s


0.300 s


0.700 s

Figure D.11. Sequential Photographs for Test No. 469468-4-2 (Rear View).

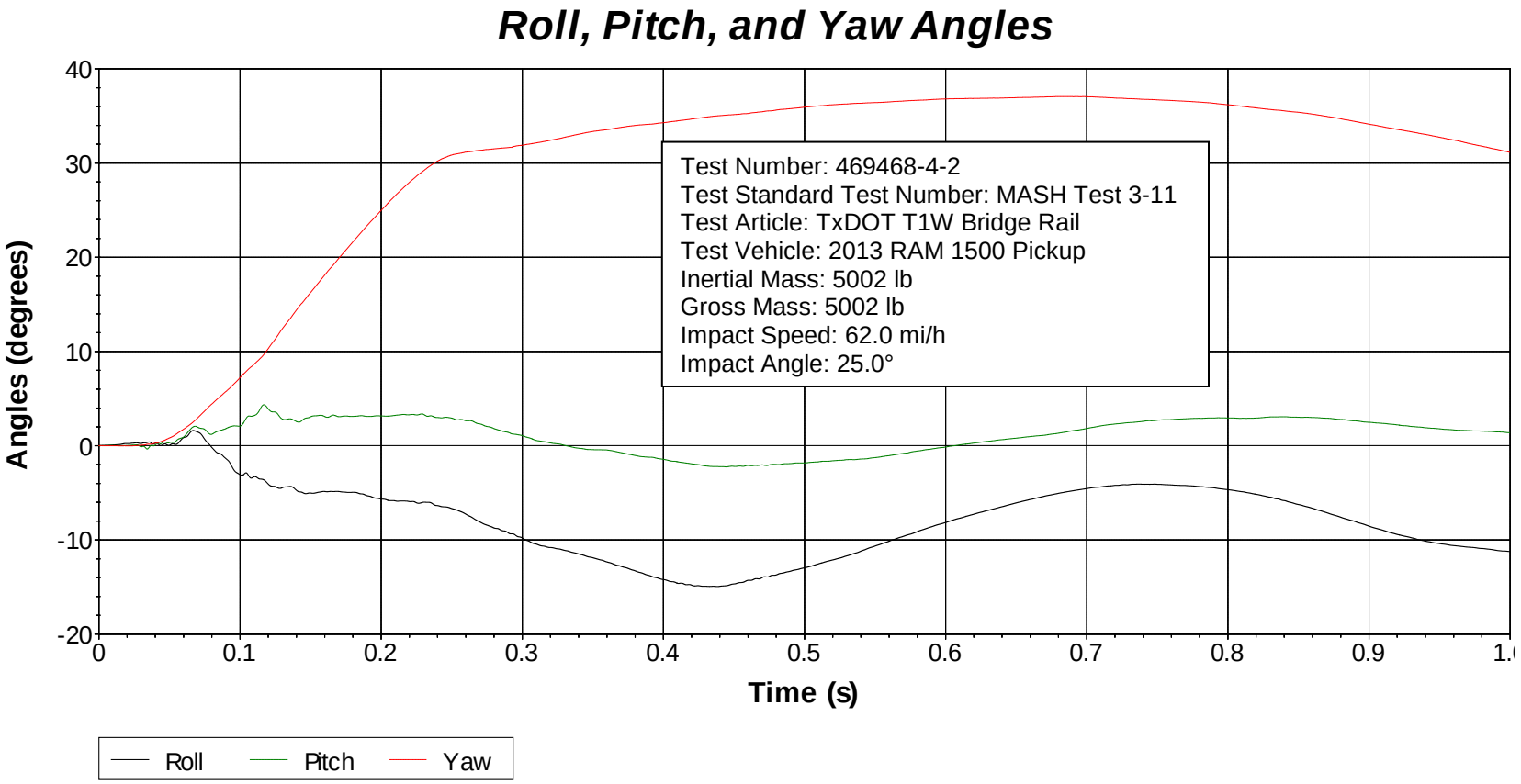

Figure D.12. Vehicle Angular Displacements for Test No. 469468-4-2.

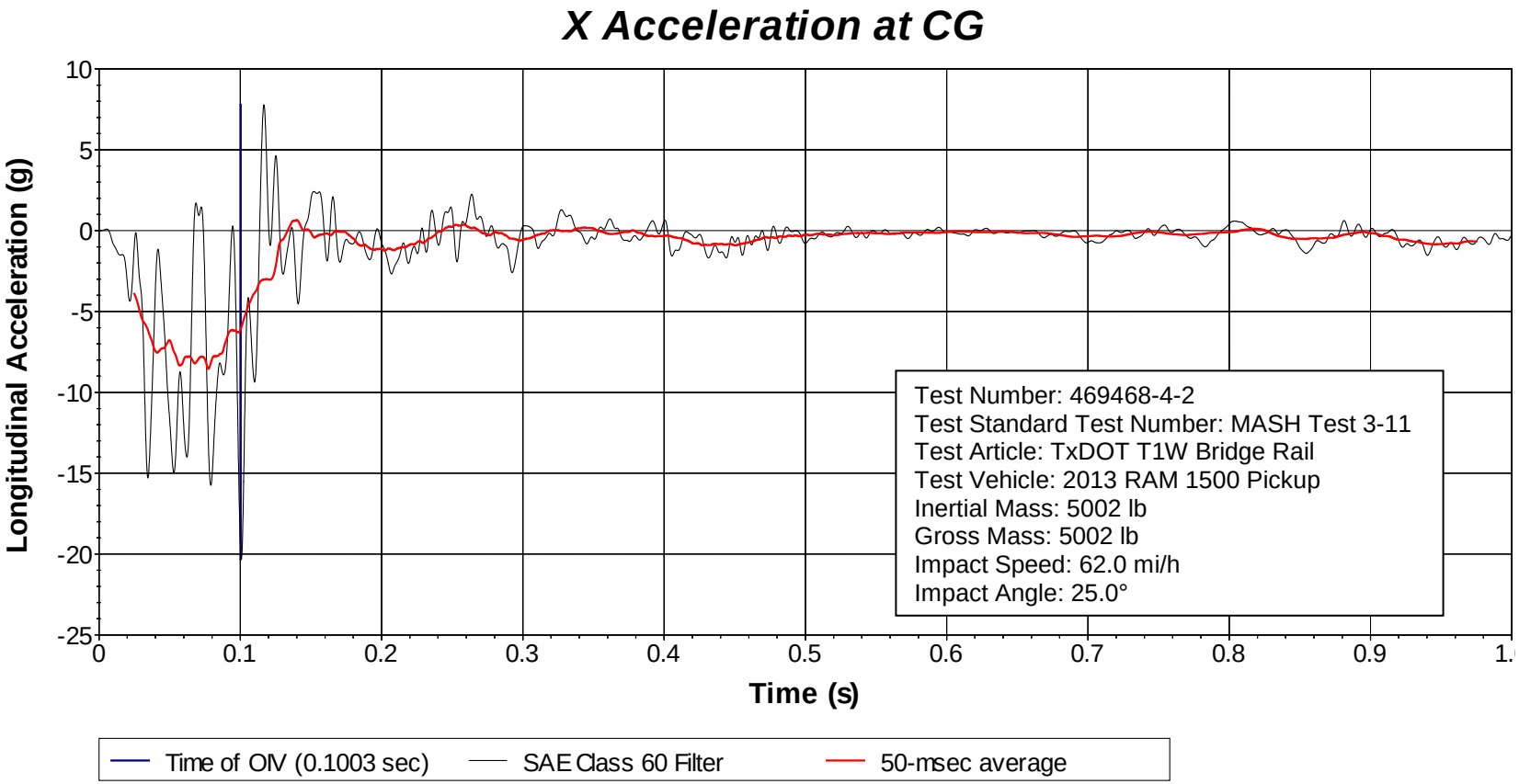

Figure D.13. Vehicle Longitudinal Accelerometer Trace for Test No. 469468-4-2 (Accelerometer Located at Center of Gravity).

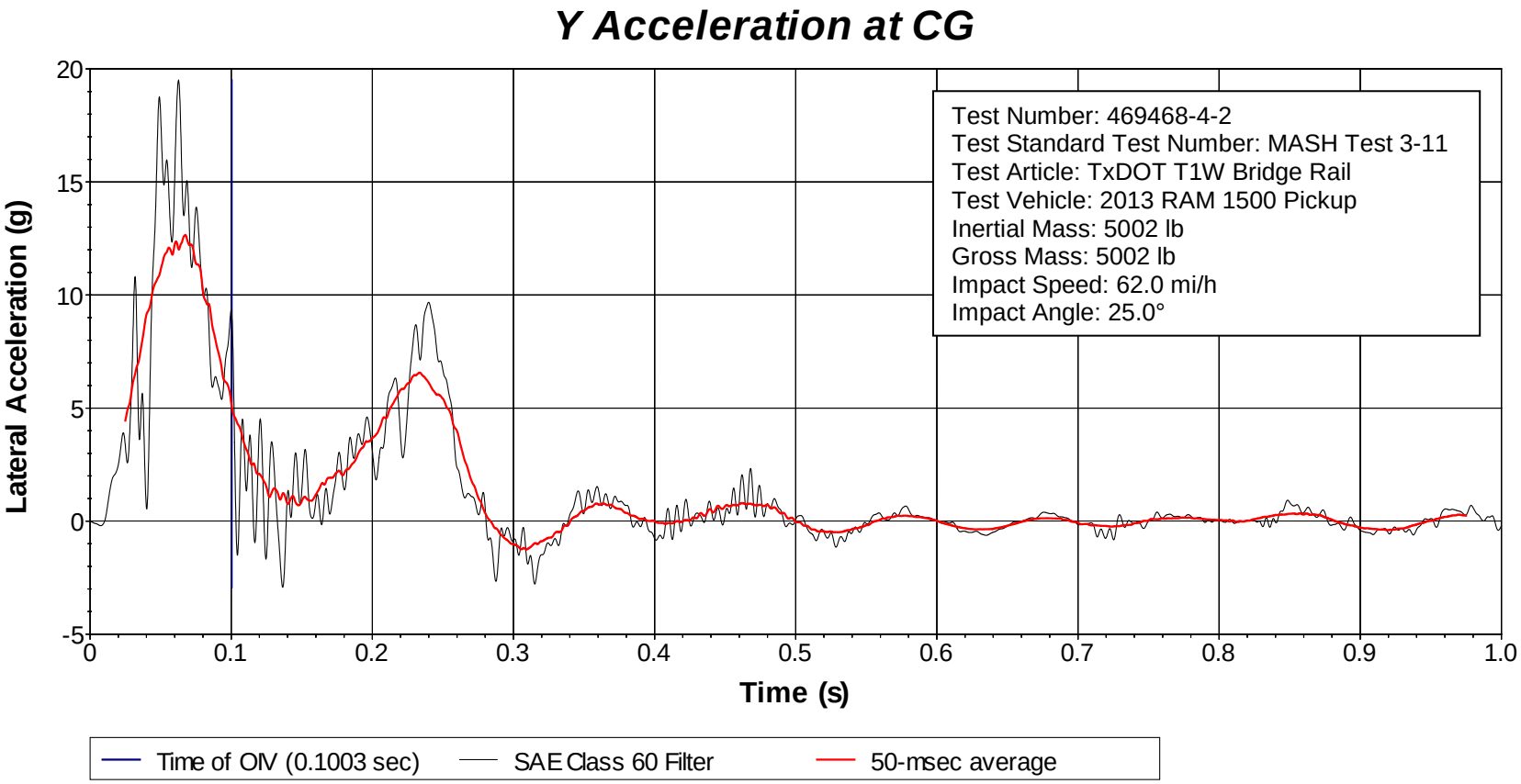

Figure D.14. Vehicle Lateral Accelerometer Trace for Test No. 469468-4-2 (Accelerometer Located at Center of Gravity).

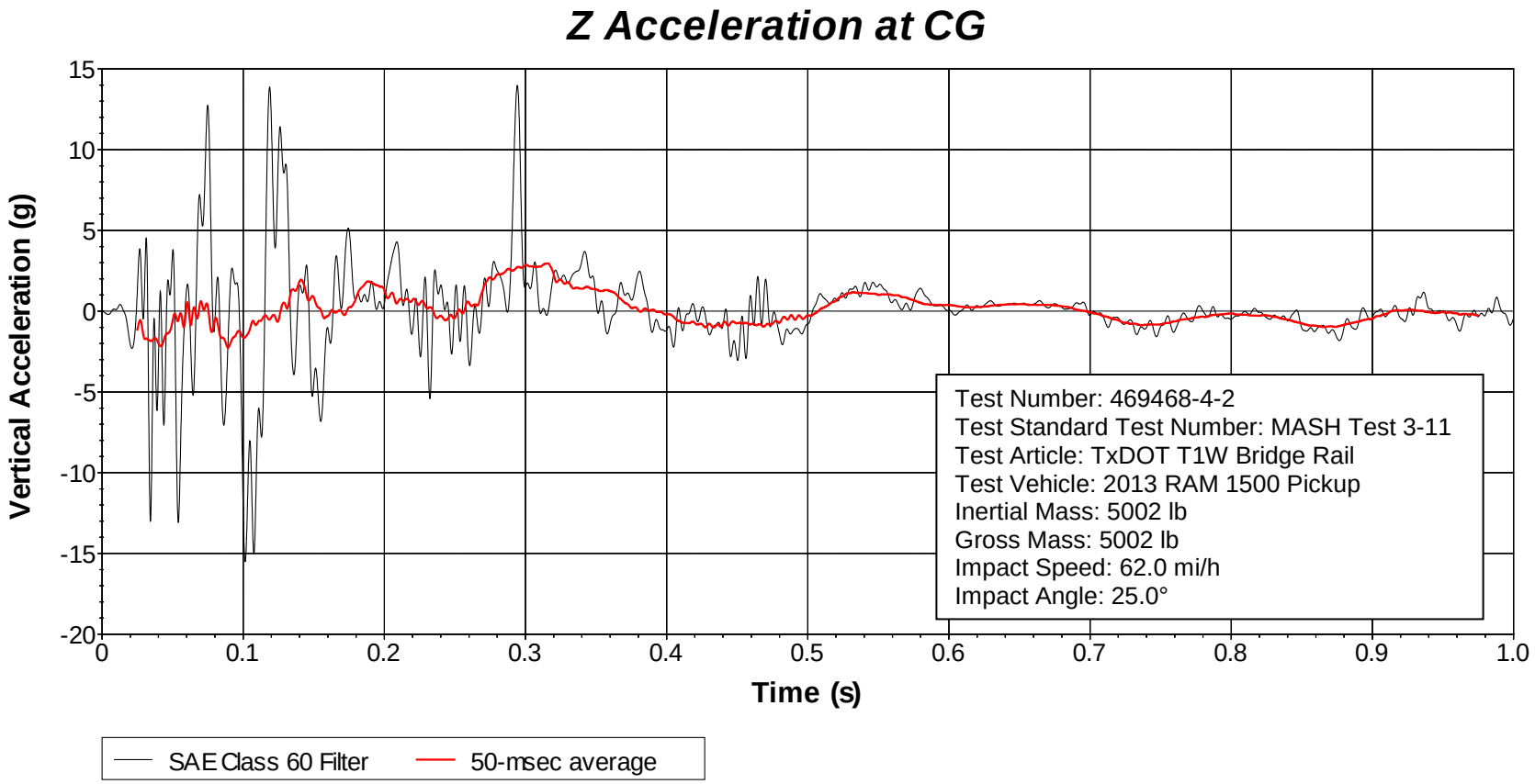

Figure D.15. Vehicle Vertical Accelerometer Trace for Test No. 469468-4-2 (Accelerometer Located at Center of Gravity).

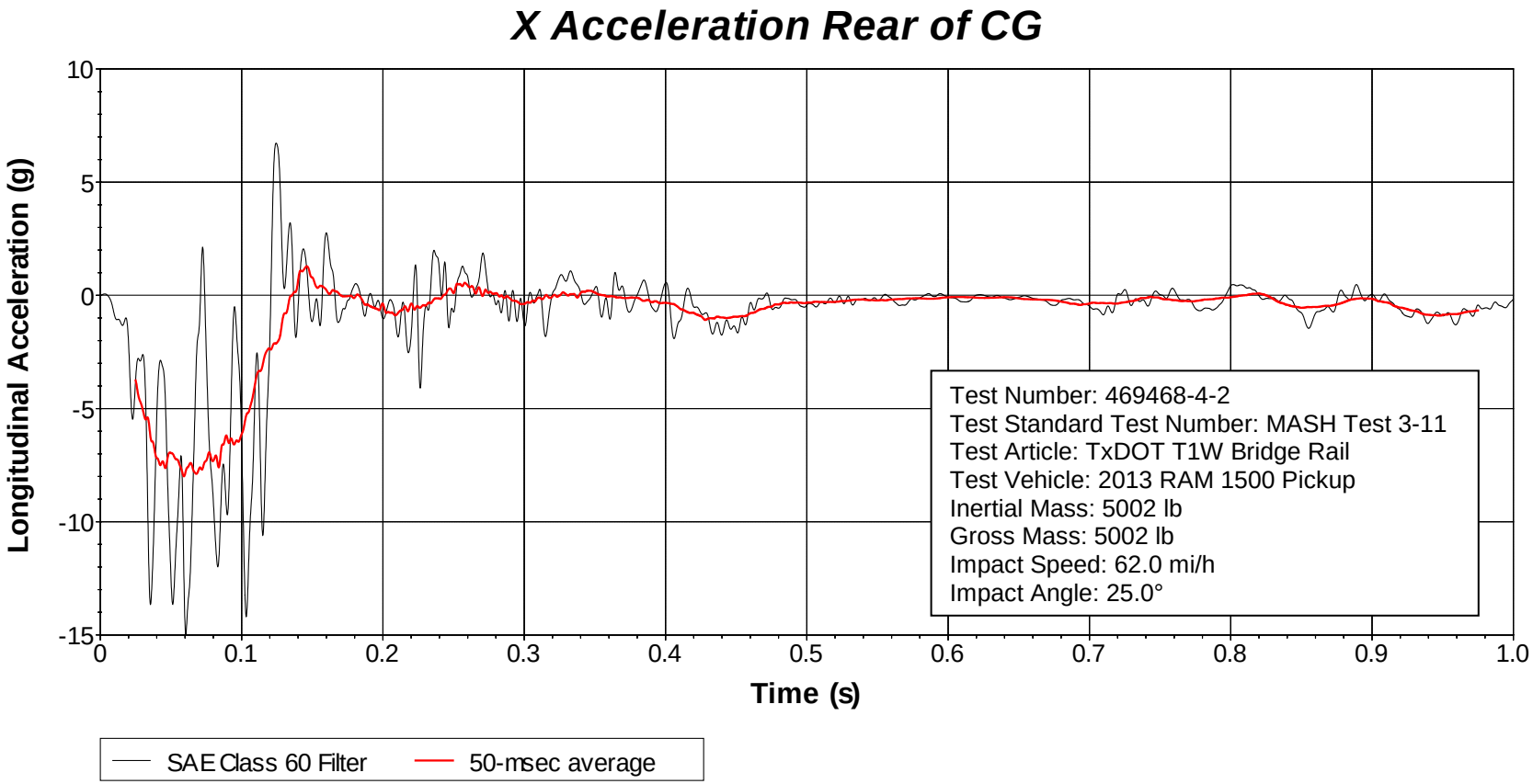

Figure D.16. Vehicle Longitudinal Accelerometer Trace for Test No. 469468-4-2 (Accelerometer Located Rear of Center of Gravity).

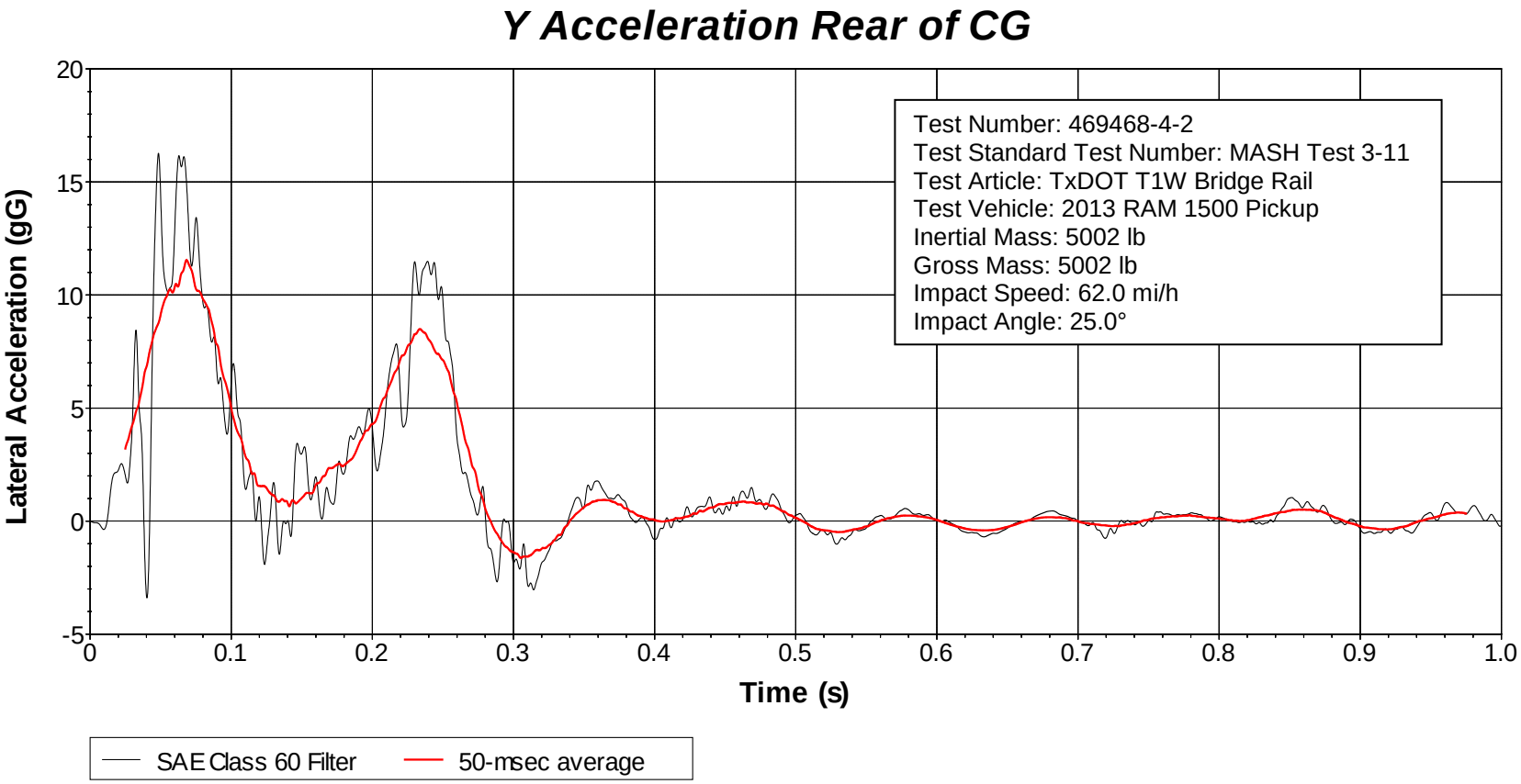

Figure D.17. Vehicle Lateral Accelerometer Trace for Test No. 469468-4-2 (Accelerometer Located Rear of Center of Gravity).

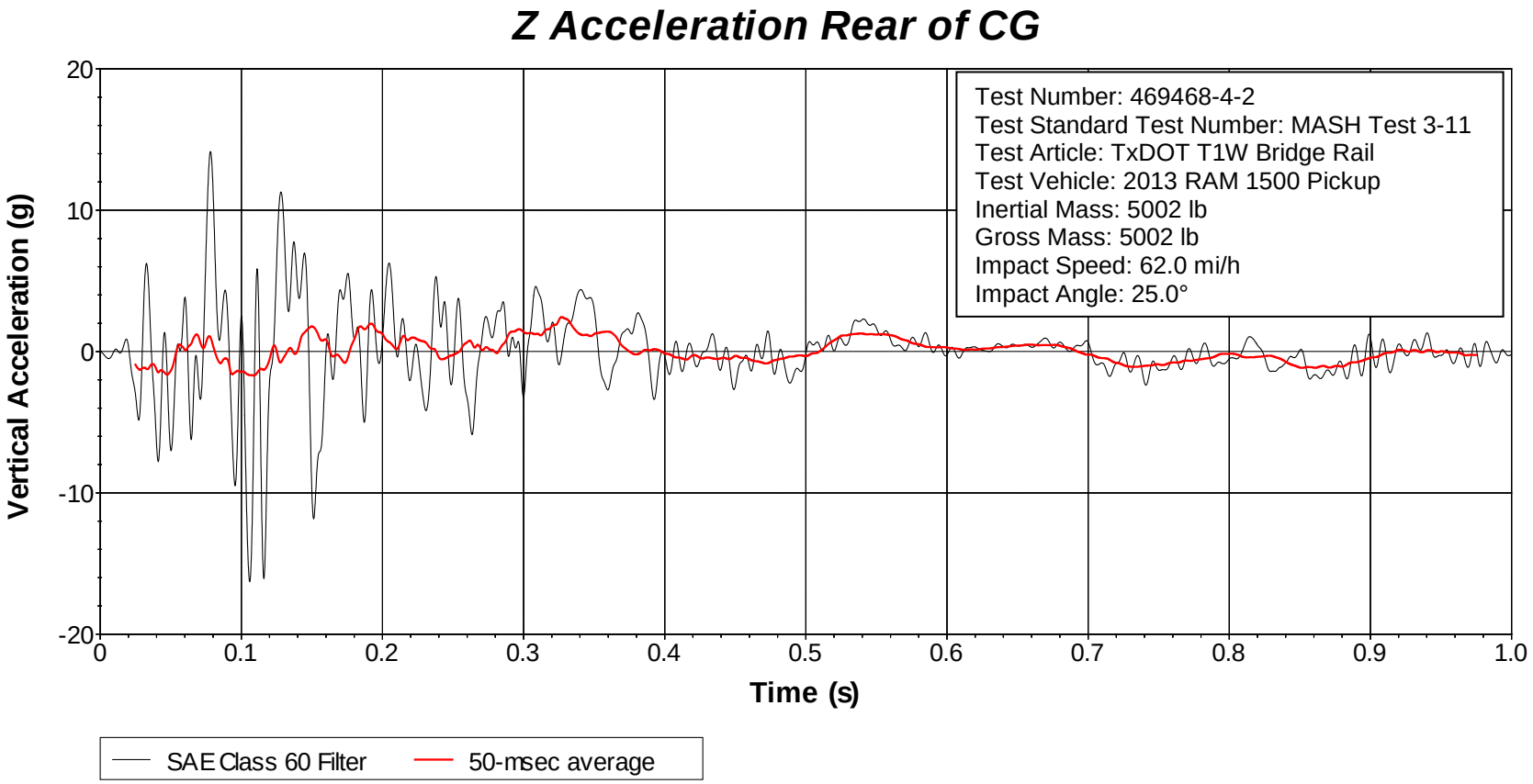

Figure D.18. Vehicle Vertical Accelerometer Trace for Test No. 469468-4-2 (Accelerometer Located Rear of Center of Gravity).

APPENDIX E. ROUND WOOD POST W-BEAM GUARDRAIL

E.1 DETAILS OF THE SYSTEM

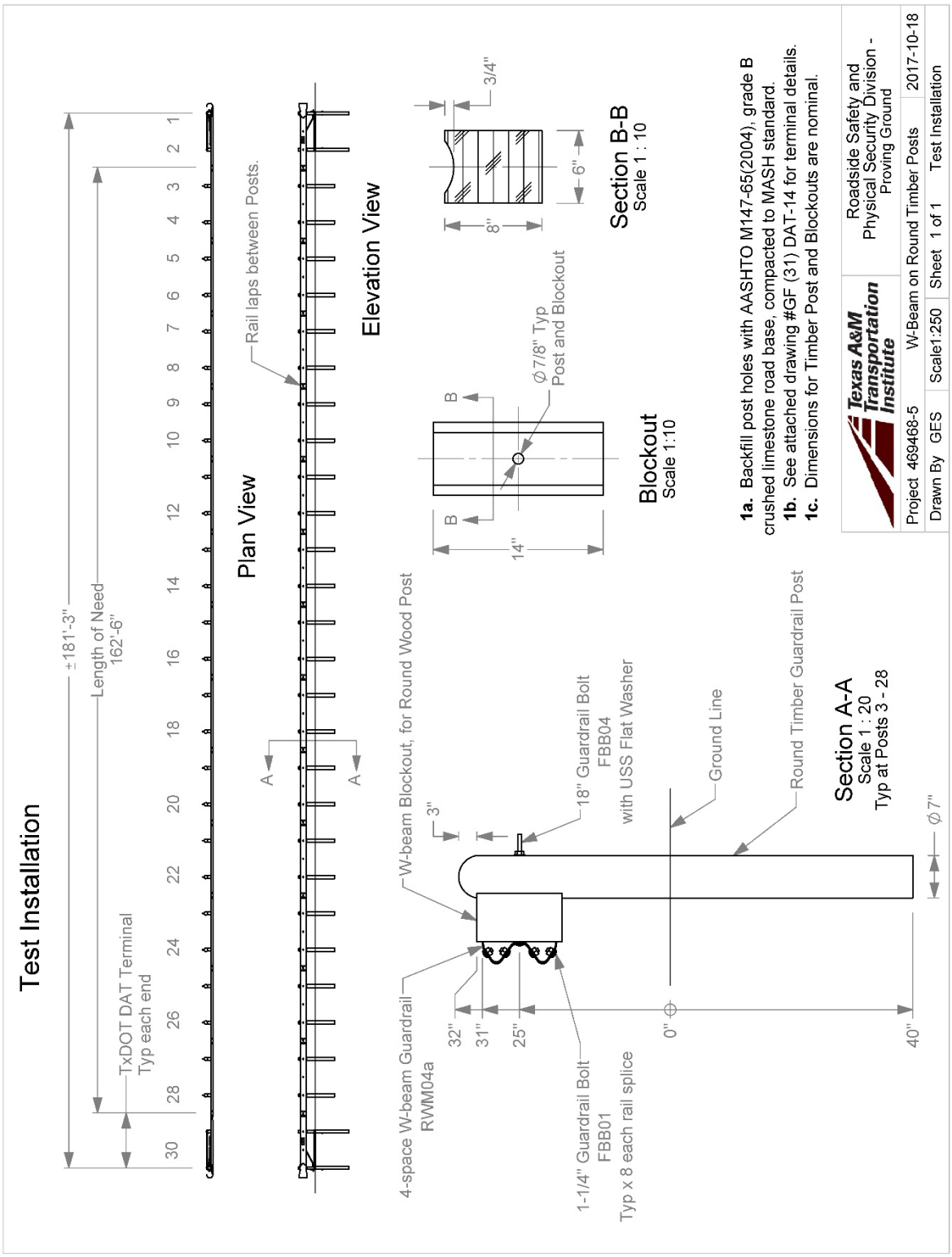

DISCLAIMER:
The use of this standard is governed by the "Texas Engineering Practice Act". No warranty of any kind is made by TxDOT for any purpose whatsoever. TxDOT assumes no responsibility for the conversion of this standard to other formats or for incorrect results or damages resulting from its use.

DATE:
FILE:

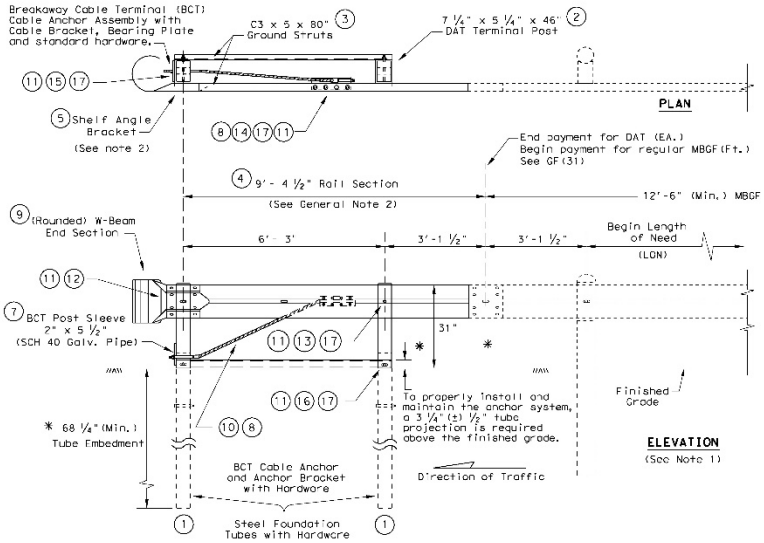

DOWNSTREAM ANCHOR TERMINAL (DAT)

Only for downstream use, when located outside the horizontal clearance area of opposing traffic.

GENERAL NOTES

1. The detail shown is the minimum Length of Need (LON) for a DAT connected to a concrete rail.
2. The rail section at the end post is supported by the Shelf Angle Bracket. The rail element is not attached to the end post.
3. The foundation tubes shall not project more than 3 3/4" above the finished grade.
4. All hardware for DAT shall be ASTM A307 unless otherwise shown.
5. Refer to GF(31) sheet for terminal connection details.

MOW STRIP INSTALLATION

If a mow strip is required with the DAT installation the leave-out area around the steel foundation tubes and the two channel struts may be omitted. This will require a full pour at the foundation tubes.

#	(DAT) PARTS LIST	QTY
(1)	Steel Foundation Tube	2
(2)	DAT Terminal Post	2
(3)	Channel Strut	2
(4)	Terminal Rail Element	1
(5)	Shelf Angle Bracket	1
(6)	BCT Bearing Plate	1
(7)	BCT Post Sleeve	1
(8)	Guardrail Anchor Bracket	1
(9)	(Rounced)W-Beam End Section	1
(10)	BCT Cable Anchor	1
(11)	Recessed Nut, Guardrail	20
(12)	1 1/4" Button Head Bolt	4
(13)	10" Button Head Bolt	2
(14)	5/8" x 2" Hex Head Bolt	8
(15)	5/8" x 8" Hex Head Bolt	4
(16)	5/8" x 10" Hex Head Bolt	2
(17)	5/8" Flat Washer	18

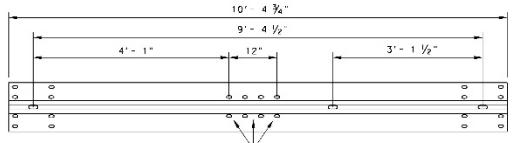

(4) TERMINAL RAIL ELEMENT FOR DAT

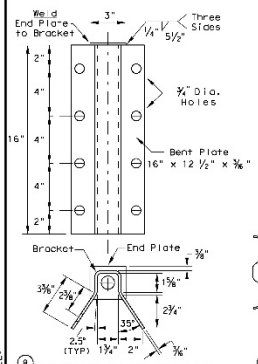

(8) GUARDRAIL ANCHOR BRACKET

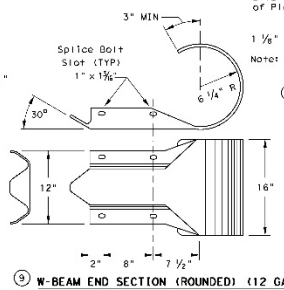

(9) W-BEAM END SECTION (ROUNDED) (12 GA.)

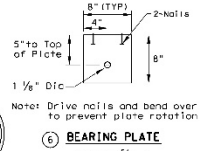

(6) BEARING PLATE
8"x 8"x 3/8" PL

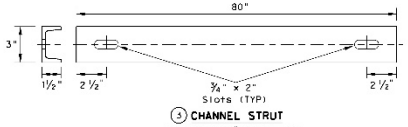

(3) CHANNEL STRUT
C3 x 5 x 80", Grade A36

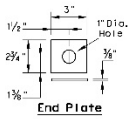

End Plate

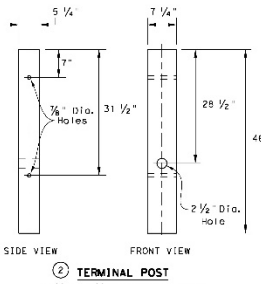

(2) TERMINAL POST
7 1/4"x 5 1/4"x 46" Wood Post

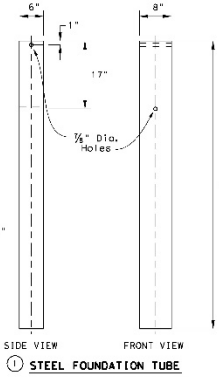

(1) STEEL FOUNDATION TUBE
6"x 6"x 1/8" x 72" Steel Tube

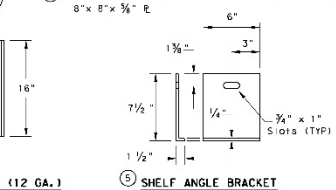

(5) SHELF ANGLE BRACKET

Texas Department of Transportation — Design Division Standard

METAL BEAM GUARD FENCE
(Downstream Anchor Terminal)

GF(31)DAT-14

FILE: gf31ct14.dgn	DN: TxDOT	CK: AM	DW: YP
© TxDOT December 2011 REVISIONS	CONT	SECT	JOB
	DIST	COUNTY	SHEET NO.

NOTES: 1. ALL FILLETS SHALL HAVE A MINIMUM RADIUS OF 1/16 [2].
2. IF THE BOLT EXTENDS MORE THAN 1/4 [6] FROM THE NUT THE BOLT SHOULD BE TRIMMED BACK.

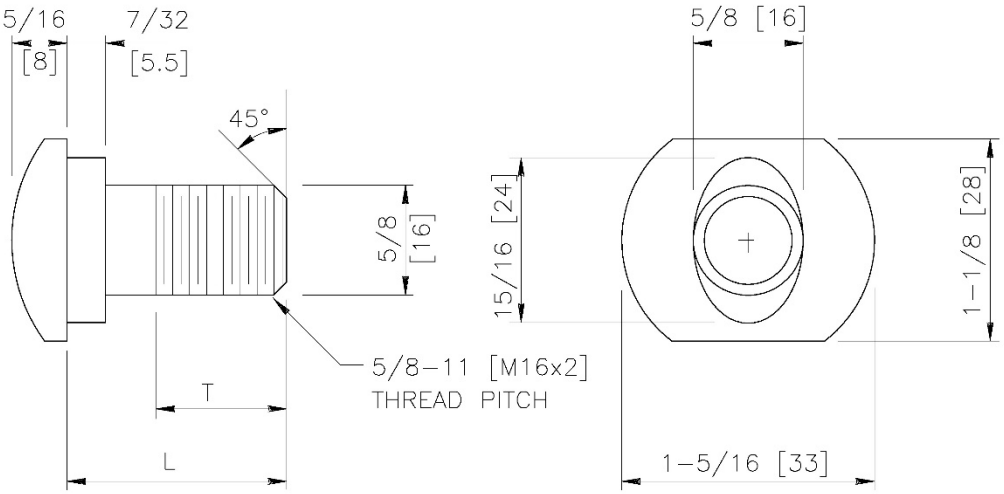

DESIGNATOR	L	T (MIN)
FBB01	1–1/4 [35]	1–1/8 [30]
FBB02	2 [50]	1–3/4 [45]
FBB03	10 [255]	4 [100]
FBB04	18 [460]	4 [100]
FBB05	25 [640]	4 [100]

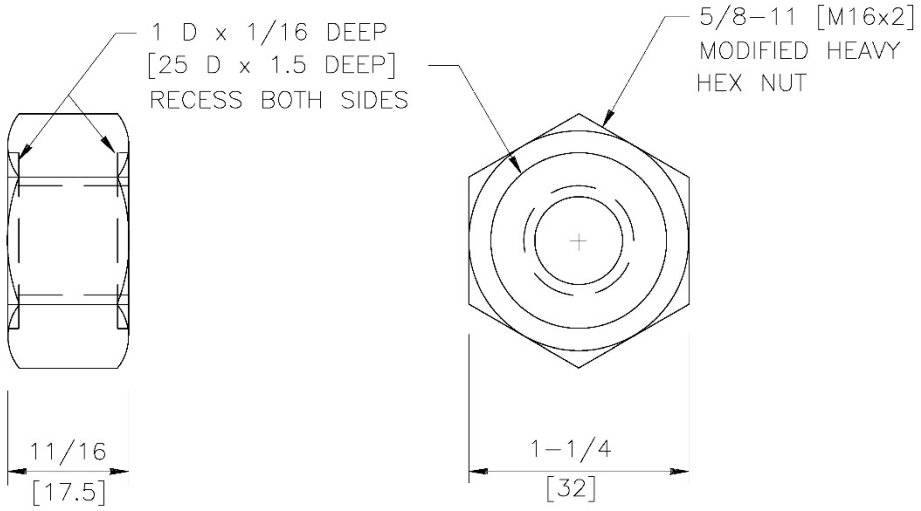

1976

GUARDRAIL BOLT AND RECESSED NUT

FBB01–05

SHEET NO.	DATE:
1 of 2	6/30/2005

SPECIFICATIONS

The geometry and material specifications for this oval shoulder button-headed bolt and hex nut are found in AASHTO M 180. The bolt shall have 5/8-11 [M16x2] threads as defined in ANSI B1.1 [ANSI B1.13M] for Class 2A [6g] tolerances. Bolt material shall conform to ASTM A307 Grade A [ASTM F 568M Class 4.6], with a tensile strength of 60 ksi [400 MPa] and yield strength of 36 ksi [240 MPa]. Material for corrosion-resistant bolts shall conform to ASTM A325 Type 3 [ASTM F 568M Class 8.8.3], with tensile strength of 120 ksi [830 MPa] and yield strength of 92 ksi [660 MPa]. This bolt material has corrosion resistance comparable to ASTM A588 steels. Metric zinc-coated bolt heads shall be marked as specified in ASTM F 568 Section 9 with the symbol "4.6."

Nuts shall have ANSI B1.1 Class 2B [ANSI B1.13M Class 6h] 5/8-11 [M16x2] threads. The geometry of the nuts, with the exception of the recess shown in the drawing, shall conform to ANSI B18.2.2 [ANSI B18.2.4.1M Style 1] for zinc-coated hex nuts (shown in drawing) and ANSI B18.2.2 [ANSI B18.2.4.6M] for heavy hex corrosion-resistant nuts (not shown in drawing). Material for zinc-coated nuts shall conform to the requirements of AASHTO M 291 (ASTM A 563) Grade A [AASHTO M 291M (ASTM A 563M) Class 5], and material for corrosion-resistant nuts shall conform to the requirements of AASHTO M 291 (ASTM A 563) Grade C3 [AASHTO M 291M (ASTM A 563M) Class 8S3].

When zinc-coated bolts and nuts are required, the coating shall conform to either AASHTO M 232 (ASTM A 153/A 153M) for Class C or AASHTO M 298 (ASTM B 695) for Class 50. Zinc-coated nuts shall be tapped over-size as specified in AASHTO M 291 (ASTM A 563) [AASHTO M 291M (ASTM A 563M)], except that a diametrical allowance of 0.020 inch [0.510 mm] shall be used instead of 0.016 inches [0.420 mm].

Designator	Stress Area of Threaded Bolt Shank (in^2 [mm^2])	Min. Bolt Tensile Strength (kips [kN])
FBB01-05	0.226 [157.0]	13.6 [62.8]

Dimensional tolerances not shown or implied are intended to be those consistent with the proper functioning of the part, including its appearance and accepted manufacturing practices.

INTENDED USE

These bolts and nuts are used in numerous guardrail and median barrier designs.

GUARDRAIL BOLT AND RECESSED NUT

FBB01-05	
SHEET NO.	DATE
2 of 2	6/30/2005

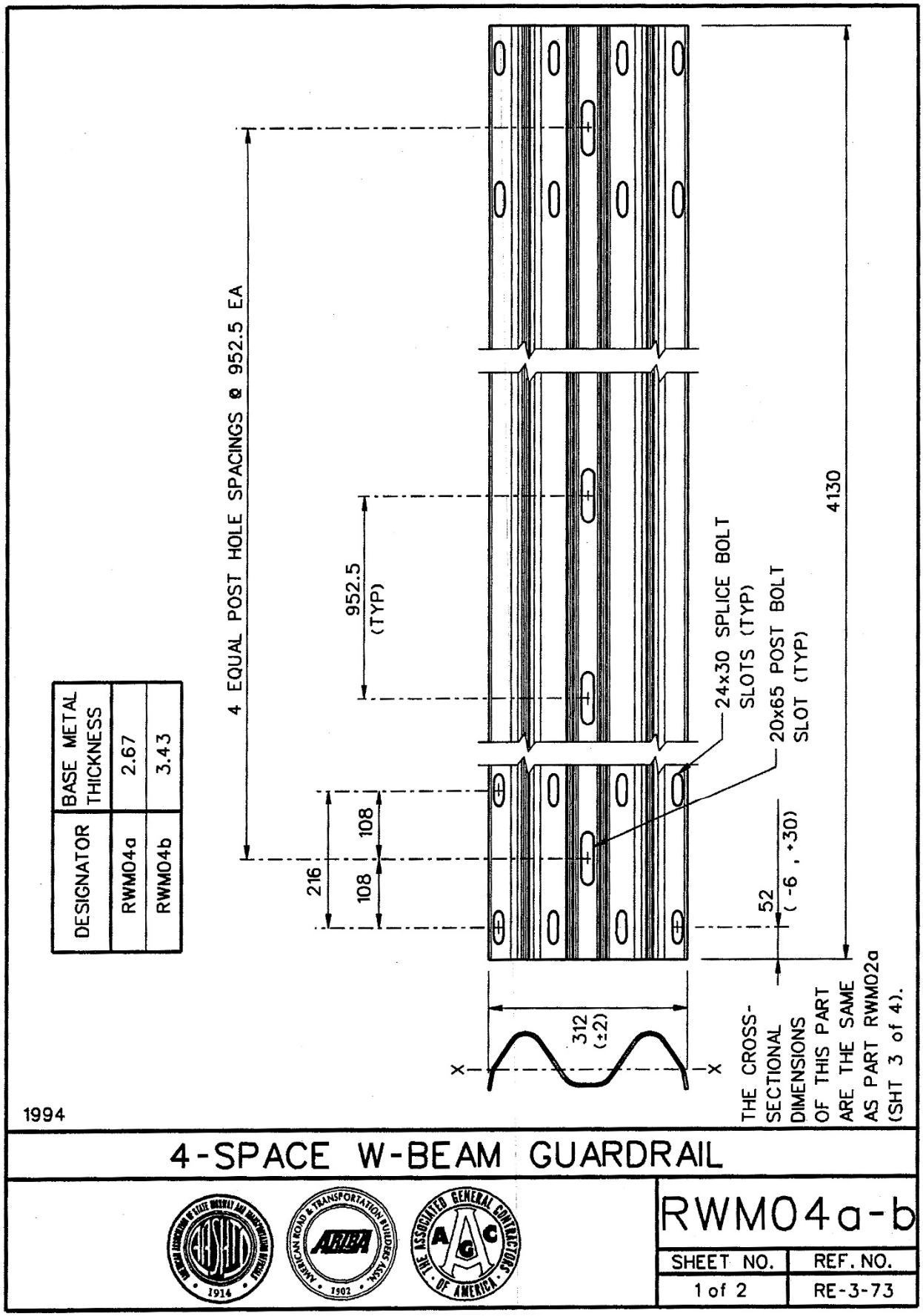
4 EQUAL POST HOLE SPACINGS @ 952.5 EA
952.5 (TYP)
4130
24x30 SPLICE BOLT SLOTS (TYP)
20x65 POST BOLT SLOT (TYP)
216
108
108
52 (-6 , +30)
312 (±2)
X
X
THE CROSS-SECTIONAL DIMENSIONS OF THIS PART ARE THE SAME AS PART RWM02a (SHT 3 of 4).
DESIGNATOR
BASE METAL THICKNESS
RWM04a
2.67
RWM04b
3.43
1994
4-SPACE W-BEAM GUARDRAIL
RWM04a-b
SHEET NO.
1 of 2
REF. NO.
RE-3-73

SPECIFICATIONS

Corrugated sheet steel beams shall conform to the current requirements of AASHTO M180. The section shall be manufactured from sheets with a nominal width of 483 mm. Guardrail RWM04a shall conform to AASHTO M180 Class A and RWM04b shall conform to Class B. Corrosion protection may be either Type II (zinc-coated) or Type IV (corrosion resistant steel). Corrosion resistant steel should conform to ASTM A606 for Type IV material and shall not be zinc-coated, painted or otherwise treated. Inertial properties are calculated for the whole cross-section without a reduction for the splice bolt holes.

Designator	Area (10^3 mm^2)	I_x (10^6 mm^4)	I_y (10^6 mm^4)	S_x (10^3 mm^3)	S_y (10^3 mm^3)
RWM04a-b	1.3	1.0	--	23	--

Dimensional tolerances not shown or implied are intended to be those consistent with the proper functioning of the part, including its appearance and accepted manufacturing practices.

INTENDED USE

This corrugated sheet steel beam is used as a rail element in transition systems STB02 and STB03 or when a reduced post spacing is desired in the SGR02, SGR04a-b, SGM02, and SGM04a-b.

4-SPACE W-BEAM GUARDRAIL

RWM04a-b

SHEET NO.	DATE
2 of 2	04-01-95

E.2 SUPPORTING CERTIFICATION DOCUMENTS

Tricon Precast Limited™
15055 Henry Road, Houston TX 77060
P: 281-931-9832 F: 281-931-0061
www.triconprecast.com

PROPOSAL

TRICON PRECAST CONCRETE TRAFFIC BARRIER

November 17, 2016

Texas Transportation Institute
P.O.# 468957-5

Re: F Shape Barrier for Crash Testing
Texas A&M Transportation Institute
Bryan, Texas
Brazos County, Texas

TPL # 1611026

We are pleased to offer for your consideration, the following quotation prepared in accordance with specifications and drawings / information provided to us:

ITEM	DESC	TPL PART	ITEM DESCRIPTION	QTY	UNIT	UNIT PRICE	EXTENSION
512	6005		Port CTB 30' - 32" F Shape JJ Connections	120	LF	$57.80	$6,936.00
			To be anchored to concrete paving				
			4 each f shape barrier for crash testing				
			w/ diagonal holes and pins on one side only:				
			1.25' x 20.5" anchor pins ASTM A36 w/ 2.25"				
			washer all galvanized. Certified papers for				
			reinforcing, JJ Hooks, Batch Tickets, and				
			break test results on all barrier.				

INCLUSIONS /EXCLUSIONS

Drain Slots	X	included		excluded
Diag Anchor Holes / Pins 4	X	included		excluded
Connecting Hardware	X	included		excluded
Freight	X	included		excluded
Offloading / Installation		included	X	excluded
8.25% Sales Tax		included	X	excluded
Lifting Hardware		included	X	excluded
Epoxy Coated Reinforcing		included	X	excluded
Galvanized Reinforcing		included	X	excluded

190193

June 16, 2017

K-T Bolt Manufacturing Company, Inc.®
1150 Katy Fort-Bend Road
Katy, Texas 77494
Ph: 281-391-2196 Fax: 281-391-2673
certs@k-tbolt.com

Original Mill Test Report

Company:	**Tricon Precast, LTD**
Part Description:	**100 pcs 1 ¼" x 20 ½" Washer Head Drive Pin**
Material Specification:	**ASTM A36 – '12**
Coating Specification:	**Galvanized per ASTM F2329 / A153**
Purchase Order Number:	**8291**
Lot Number:	**46590-3**
Comments:	**None**
Material Heat Number:	**3064788**

Chemical Analysis

C	Cb	Cr	Cu	Mn	Mo	V	Ni
.19%	.001%	.11%	.23%	.75%	.019%	.015%	.07%
P	S	Si	Sn	Al	-	-	-
.016%	.041%	.22%	.009%	.002%	-	-	-

100% Melted and Manufactured in the USA - Values reflect original mill test report

Tensile and Hardness Test Results

Property	#1 ksi
Tensile:	79.3
Proof/Yield:	54.3
Elongation %:	27%
ROA %:	56%
Hardness:	183BHN

Comments
Test results reflect the original mill test report

K-T Bolt Manufacturing Co., Inc.

Linda Isgett

Quality Representative

All reports are the exclusive property of K-T Bolt Manufacturing Company, Inc.®. Any reproduction must be in their entirety and at the permission of same.

FS R.

GERDAU

US-ML-MIDLOTHIAN
300 WARD ROAD
MIDLOTHIAN, TX 76065
USA

CERTIFIED MATERIAL TEST REPORT

CUSTOMER SHIP TO	CUSTOMER BILL TO
REGAL METALS INTERNATIONAL INC 207 SENTRY DR MANSFIELD,TX 76063-3609 USA	REGAL METALS INTERNATIONAL INC 207 SENTRY DR MANSFIELD,TX 76063-3609 USA

GRADE	SHAPE / SIZE	DOCUMENT ID:
60 (420)	Rebar / #5 (16MM)	0000000000

LENGTH	WEIGHT	HEAT / BATCH
40'00"	24,282 LB	58027631/02

SALES ORDER	CUSTOMER MATERIAL N°	SPECIFICATION / DATE or REVISION
4416559/000010		ASTM A615/A615M-15 E1

CUSTOMER PURCHASE ORDER NUMBER	BILL OF LADING	DATE
14488	1327-0000215334	11/07/2016

CHEMICAL COMPOSITION

C %	Mn %	P %	S %	Si %	Cu %	Ni %	Cr %	Mo %	Sn %	V %	Nb %	Al %
0.42	0.98	0.016	0.028	0.24	0.27	0.12	0.27	0.032	0.013	0.003	0.000	0.003

CHEMICAL COMPOSITION

CEqvA706 %
0.62

MECHANICAL PROPERTIES

YS PSI	YS MPa	UTS PSI	UTS MPa	G/L Inch	G/L mm
67215	463	105845	730	8.000	200.0

MECHANICAL PROPERTIES

Elong. %	BendTest
18.20	OK

COMMENTS / NOTES

The above figures are certified chemical and physical test records as contained in the permanent records of company. We certify that these data are correct and in compliance with specified requirements. This material, including the billets, was melted and manufactured in the USA. CMTR complies with EN 10204 3.1.

Bhaskar — BHASKAR YALAMANCHILI, QUALITY DIRECTOR

Tom Harrington — TOM HARRINGTON, QUALITY ASSURANCE MGR.

F.S.R.

GERDAU

US-ML-MIDLOTHIAN
300 WARD ROAD
MIDLOTHIAN, TX 76065
USA

CERTIFIED MATERIAL TEST REPORT

CUSTOMER SHIP TO	CUSTOMER BILL TO
REGAL METALS INTERNATIONAL INC 207 SENTRY DR MANSFIELD,TX 76063-3609 USA	REGAL METALS INTERNATIONAL INC 207 SENTRY DR MANSFIELD,TX 76063-3609 USA

GRADE	SHAPE / SIZE	DOCUMENT ID:
60 (420)	Rebar / #5 (16MM)	0000000000

LENGTH	WEIGHT	HEAT / BATCH
40'00"	6,008 LB	58027888/02

SALES ORDER	CUSTOMER MATERIAL N°	SPECIFICATION / DATE or REVISION
4543455/000010		ASTM A615/A615M-15 E1

CUSTOMER PURCHASE ORDER NUMBER	BILL OF LADING	DATE
350221	1327-0000218247	12/07/2016

CHEMICAL COMPOSITION

C %	Mn %	P %	S %	Si %	Cu %	Ni %	Cr %	Mo %	Sn %	V %	Nb %	Al %
0.42	0.72	0.011	0.039	0.21	0.22	0.13	0.30	0.021	0.006	0.001	0.000	0.003

CHEMICAL COMPOSITION

CEqvA706 %
0.58

MECHANICAL PROPERTIES

YS PSI	YS MPa	UTS PSI	UTS MPa	G/L Inch	G/L mm
64501	445	99487	686	8.000	200.0

MECHANICAL PROPERTIES

Elong. %	BendTest
16.00	OK

COMMENTS / NOTES

The above figures are certified chemical and physical test records as contained in the permanent records of company. We certify that these data are correct and in compliance with specified requirements. This material, including the billets, was melted and manufactured in the USA. CMTR complies with EN 10204 3.1.

Bhaskar — BHASKAR YALAMANCHILI, QUALITY DIRECTOR

Phone: (409) 769-1014 Email: Bhaskar.Yalamanchili@gerdau.com

Tom Harrington — TOM HARRINGTON, QUALITY ASSURANCE MGR.

Phone: 972-779-1872 Email: Tommy.Harrington@gerdau.com

TR No. 0-6946-R2

E-11

2019-03-26

FOR.

GERDAU

US-ML-MIDLOTHIAN
300 WARD ROAD
MIDLOTHIAN, TX 76065
USA

CERTIFIED MATERIAL TEST REPORT

CUSTOMER SHIP TO	CUSTOMER BILL TO	GRADE	SHAPE / SIZE	DOCUMENT ID:
REGAL METALS INTERNATIONAL INC 207 SENTRY DR MANSFIELD,TX 76063-3609 USA	REGAL METALS INTERNATIONAL INC 207 SENTRY DR MANSFIELD,TX 76063-3609 USA	60 (420)	Rebar / #5 (16MM)	0000000000

LENGTH	WEIGHT	HEAT / BATCH
40'00"	24,032 LB	58027889/03

SALES ORDER	CUSTOMER MATERIAL N°	SPECIFICATION / DATE or REVISION
4538466/000010		ASTM A615/A615M-15 E1

CUSTOMER PURCHASE ORDER NUMBER.	BILL OF LADING	DATE
YARD 53	1327-0000218461	12/09/2016

CHEMICAL COMPOSITION

C %	Mn %	P %	S %	Si %	Cu %	Ni %	Cr %	Mo %	Sn %	V %	Nb %	Al %
0.42	0.76	0.012	0.026	0.27	0.27	0.16	0.24	0.035	0.007	0.003	0.000	0.003

CHEMICAL COMPOSITION

CEqvA706 %
0.58

MECHANICAL PROPERTIES

YS PSI	YS MPa	UTS PSI	UTS MPa	G/L Inch	G/L mm
65467	451	100277	691	8.000	200.0

MECHANICAL PROPERTIES

Elong. %	BendTest
15.00	OK

COMMENTS / NOTES

The above figures are certified chemical and physical test records as contained in the permanent records of company. We certify that these data are correct and in compliance with specified requirements. This material, including the billets, was melted and manufactured in the USA. CMTR complies with EN 10204 3.1.

BHASKAR YALAMANCHILI
QUALITY DIRECTOR
Phone: (409) 769-1014 Email: Bhaskar.Yalamanchili@gerdau.com

TOM HARRINGTON
QUALITY ASSURANCE MGR.
Phone: 972-779-1872 Email: Tommy.Harrington@gerdau.com

F.S.R.

GERDAU

CERTIFIED MATERIAL TEST REPORT

US-ML-MIDLOTHIAN
300 WARD ROAD
MIDLOTHIAN, TX 76065
USA

CUSTOMER SHIP TO	CUSTOMER BILL TO
REGAL METALS INTERNATIONAL INC 207 SENTRY DR MANSFIELD,TX 76063-3609 USA	REGAL METALS INTERNATIONAL INC 207 SENTRY DR MANSFIELD,TX 76063-3609 USA

GRADE	SHAPE / SIZE	DOCUMENT ID:
60 (420)	Rebar / #4 (13MM)	0000000000

LENGTH	WEIGHT	HEAT / BATCH
60'00"	12,024 LB	58028862/02

SALES ORDER	CUSTOMER MATERIAL N°	SPECIFICATION / DATE or REVISION
4938978/000010		ASTM A615/A615M-15 E1

CUSTOMER PURCHASE ORDER NUMBER	BILL OF LADING	DATE
RL3/28	1327-0000230265	03/29/2017

CHEMICAL COMPOSITION

C %	Mn %	P %	S %	Si %	Cu %	Ni %	Cr %	Mo %	Sn %	V %	Nb %	Al %
0.47	0.86	0.016	0.029	0.23	0.33	0.11	0.19	0.021	0.006	0.002	0.000	0.004

CHEMICAL COMPOSITION

CEqvA706 %
0.64

MECHANICAL PROPERTIES

YS PSI	YS MPa	UTS PSI	UTS MPa	G/L Inch	G/L mm
66970	462	105260	726	8.000	200.0

MECHANICAL PROPERTIES

Elong. %	BendTest
13.60	OK

COMMENTS / NOTES

The above figures are certified chemical and physical test records as contained in the permanent records of company. We certify that these data are correct and in compliance with specified requirements. This material, including the billets, was melted and manufactured in the USA. CMTR complies with EN 10204 3.1.

BHASKAR YALAMANCHILI
QUALITY DIRECTOR
Phone: (409) 769-1014 Email: Bhaskar.Yalamanchili@gerdau.com

TOM HARRINGTON
QUALITY ASSURANCE MGR.
Phone: 972-779-1872 Email: Tommy.Harrington@gerdau.com

FSR

GERDAU

US-ML-MIDLOTHIAN
300 WARD ROAD
MIDLOTHIAN, TX 76065
USA

CERTIFIED MATERIAL TEST REPORT

CUSTOMER SHIP TO	CUSTOMER BILL TO	GRADE	SHAPE / SIZE	DOCUMENT ID:
REGAL METALS INTERNATIONAL INC 207 SENTRY DR MANSFIELD,TX 76063-3609 USA	REGAL METALS INTERNATIONAL INC 207 SENTRY DR MANSFIELD,TX 76063-3609 USA	60 (420)	Rebar / #5 (16MM)	0000000000

LENGTH	WEIGHT	HEAT / BATCH
40'00"	10,514 LB	58027890/03

SALES ORDER	CUSTOMER MATERIAL N°	SPECIFICATION / DATE or REVISION
4564328/000010		ASTM A615/A615M-15 E1

CUSTOMER PURCHASE ORDER NUMBER	BILL OF LADING	DATE
709567	1327-0000218889	12/14/2016

CHEMICAL COMPOSITION

C %	Mn %	P %	S %	Si %	Cu %	Ni %	Cr %	Mo %	Sn %	V %	Nb %	Al %
0.42	0.80	0.017	0.035	0.21	0.32	0.16	0.29	0.034	0.007	0.002	0.000	0.003

CHEMICAL COMPOSITION

CEqvA706 %
0.59

MECHANICAL PROPERTIES

YS PSI	YS MPa	UTS PSI	UTS MPa	G/L Inch	G/L mm
65456	451	99907	689	8.000	200.0

MECHANICAL PROPERTIES

Elong. %	BendTest
15.40	OK

COMMENTS / NOTES

The above figures are certified chemical and physical test records as contained in the permanent records of company. We certify that these data are correct and in compliance with specified requirements. This material, including the billets, was melted and manufactured in the USA. CMTR complies with EN 10204 3.1.

Bhaskar

BHASKAR YALAMANCHILI
QUALITY DIRECTOR

Phone: (409) 769-1014 Email: Bhaskar.Yalamanchili@gerdau.com

Tom Harrington

TOM HARRINGTON
QUALITY ASSURANCE MGR.

Phone: 972-779-1872 Email: Tommy.Harrington@gerdau.com

JJE w/24” Rebar

Rebar Ref.#74084
A706 #5 Heat #2055671

JJE Ref.# 74320
Plate 3/8" x 12" Heat # 55045644/02
Ang. 2x2x 3/16" Heat # 54153180/05

02/21/17

GERDAU

US-ML-CHARLOTTE
6601 LAKEVIEW ROAD
CHARLOTTE, NC 28269
USA

CERTIFIED MATERIAL TEST REPORT

CUSTOMER SHIP TO	CUSTOMER BILL TO
ALLIED CRAWFORD LAKELAND INC 1500 FISH HATCHERY RD LAKELAND,FL 33801-9543 USA	ALLIED CRAWFORD LAKELAND INC 1500 FISH HATCHERY RD LAKELAND,FL 33801-9543 USA

GRADE	SHAPE SIZE	DOCUMENT ID.
GGMUL11	Angle 2X2X3 16	0000015922

LENGTH	WEIGHT	HEAT BATCH
20'00"	9.5n4 LB	54153180/05

SALES ORDER	CUSTOMER MATERIAL N°
4293759/000060	

SPECIFICATION DATE or REVISION
ASTM A529-14, A572-15
ASTM A6-14,A36-14, ASME SA-36
ASTM A709-15, AASHTO M270-12
CSA G40.20-13 G40.21-13

CUSTOMER PURCHASE ORDER NUMBER	BILL OF LADING	DATE
114320	1321-0000044063	01 05 2017

CHEMICAL COMPOSITION

C %	Mn %	P %	S %	Si %	Cu %	Ni %	Cr %	Mo %	V %	Nb %	Sn %
0.14	0.77	0.016	0.029	0.21	0.34	0.09	0.11	0.020	0.016	0.003	0.024

MECHANICAL PROPERTIES

Elong. %	GL inch	UTS PSI	UTS MPa	YS PSI	YS MPa
25.00	8.000	74861	516	54200	374

GEOMETRIC CHARACTERISTICS

R:R
35.00

COMMENTS NOTES

This grade meets the requirements for the following grades:
ASTM Grades: A36; A529-50; A572-50; A709-36; A709-50
CSA Grades: 44W; 50W
AASHTO Grades: M270-36; M270-50
ASME Grades: SA36

The above figures are certified chemical and physical test records as contained in the permanent records of company. We certify that these data are correct and in compliance with specified requirements. This material, including the billets, was melted and manufactured in the USA. CMTR complies with EN 10204 3.1

BHASKAR YALAMANCHILI
QUALITY DIRECTOR
Phone: (480) 769-1014 Email: Bhaskar.Yalamanchili@gerdau.com

JORDAN FOSTER
QUALITY ASSURANCE MGR.
Phone: (704) 596-8361 EX3708 Email: Jordan.Foster@gerdau.com

GERDAU

US-ML-CARTERSVILLE
384 OLD GRASSDALE ROAD NE
CARTERSVILLE, GA 30121
USA

CERTIFIED MATERIAL TEST REPORT

CUSTOMER SHIP TO	CUSTOMER BILL TO
ALLIED CRAWFORD LAKELAND INC 1500 FISH HATCHERY RD LAKELAND,FL 33801-9543 USA	ALLIED CRAWFORD LAKELAND INC 1500 FISH HATCHERY RD LAKELAND,FL 33801-9543 USA

GRADE	SHAPE / SIZE	DOCUMENT-ID:
GGMULTI	Flat Bar / 3/8 X 12	0000035337

LENGTH	WEIGHT	HEAT / BATCH
20'00"	4,590 LB	55045644/02

SALES ORDER	CUSTOMER MATERIAL N°
3780634/001220	

SPECIFICATION / DATE or REVISION
ASTM A529-14, A572-15
ASTM A6-14,A36-14, ASME SA-36
ASTM A709-15, AASHTO M270-12
CSA G40.20-13/G40.21-13

CUSTOMER PURCHASE ORDER NUMBER	BILL OF LADING	DATE
113610-11	1323-0000074939	08/12/2016

CHEMICAL COMPOSITION

C %	Mn %	P %	S %	Si %	Cu %	Ni %	Cr %	Mo %	V %	Nb %	N %	Pb %
0.17	0.89	0.017	0.018	0.19	0.29	0.08	0.14	0.027	0.016	0.000	0.0068	0.0030

CHEMICAL COMPOSITION

Sn %
0.010

MECHANICAL PROPERTIES

Elong. %	G/L inch	UTS PSI	UTS MPa	YS 0.2% PSI	YS MPa
23.10	8.000	75900	523	54700	377
24.90	8.000	75000	517	53700	370

COMMENTS / NOTES

This grade meets the requirements for the following grades:
ASTM Grades: A36; A529-50; A572-50; A709-36; A709-50
CSA Grades: 44W; 50W
AASHTO Grades: M270-36; M270-50
ASME Grades: SA36

The above figures are certified chemical and physical test records as contained in the permanent records of company. We certify that these data are correct and in compliance with specified requirements. This material, including the billets, was melted and manufactured in the USA. CMTR complies with EN 10204 3.1.

BHASKAR YALAMANCHILI
QUALITY DIRECTOR

YAN WANG
QUALITY ASSURANCE MGR.

Tiecon

CONCRETE SUMMARY

Cast Date:	6-15-17	Tested By:	K. Mahaffee
Break Date:	6-16-17	Days:	1
Time:	5:56 AM		

Mix #	Load	Cyl #	PSI	Avg.	Cone Temp	Amb. Temp	Flow
	MSE						
	53,490	1	4,260				
	53,940	2	4,290				
	SW/Columns/Caps						
	62,100	1	4,940				
	61,510	2	4,900				
	Coping						
	76,400	1	6080				
	73,310	2	5,840				
	MSE-Exposed						
	SW-Exposed						
	MSE-Color						
	Coping-Color						
F-Shape	CTB						
	86,970	1	6,920				
	86,680	2	6,900				
	Bridge						

51115

****

Job: BARRIER1 Date: Jun 15, 2017 Start:11:29 Disch:11:36 Ref#: 7092
Operator: JULIO Duration/Wait: 8:05/0:05 Batch#:153633 Mixer#: 1
Mix: H-70135GCPT Mix Name: TRUCK
Required: 999999.00 Batched: 55350.85
Amount: 3.50 CY
PreWet: 70%

Material	Bin	Moist/ABS%	Design	Target	Actual		%Err	*Note	Jogs
3/4	2	1.38/0.00	1620	5691:5806	5752	Lb	0.1	-P---	2
Liberty	3	4.86/0.00	1483	5388:5497	5410	Lb	-0.6	-P---	5
HOLCIM	1		455	1577:1624	1584	Lb	-0.6	-----	5
POZZO	4		245	849:870	854	Lb	-0.5	-----	2
ADVA575	2		7.75	184.18:195.57	192.00	Oz	1.1	-----	
RECOVER	1		3.00	71.30:75.70	74.00	Oz	0.7	-----	
VMAR-3	5		3.00	63.50:83.50	75.00	Oz	2.0	-----	
Prewet				36.5:37.1	36.9	Ga	0.5	-----	
Water				15.5:15.7	16.1	Ga	3.2	-----	
Dry Mixing			0:30		0:30	s			
Wet Mixing			1:45		1:51	s			
Total Mixing			3:13		3:13	s			
Total Moisture:			26.3	92.0	92.4	Ga	0.4		
Water/Cement:			0.313	0.316					

Tricon

CONCRETE SUMMARY

Cast Date:	6-16-17	Tested By:	DM
Break Date:	6-17-17	Days:	1
Time:	6:00 Am		

Mix #	Load	Cyl #	PSI	Avg.	Cone Temp	Amb. Temp	Flow
	MSE	1	67070	5340	75610		
		2	73780	5870			
	SW/Columns/Caps	1	71090	5660	75670		
		2	71340	5680			
	Coping	1	67080	5340	75670		
		2	75260	5990			
	MSE-Exposed						
	SW-Exposed						
	MSE-Color						
	Coping-Color						
	CTB						
F-Shape		1	66920	5330	75340		
		2	67160	5350			
	Bridge						

51115

****

Job: BARRIER1 Date: Jun 16, 2017 Start:11:24 Disch:11:34 Ref#: 7139
Operator: TRICON Duration/Wait: 10:42/1:55 Batch#:153680 Mixer#: 2
Mix: H-70135GCPT Mix Name: TRUCK
Required: 999999.00 Batched: 55395.85
Amount: 3.50 CY
PreWet: 70%

Material	Bin	Moist/ABS%	Design	Target	Actual		%Err	*Note	Jogs
3/4	2	1.38/0.00	1620	5691:5806	5784	Lb	0.6	-P---	3
Liberty	3	3.92/0.00	1483	5340:5448	5366	Lb	-0.5	-P---	5
HOLCIM	1		455	1577:1624	1598	Lb	0.3	-----	3
POZZO	4		245	849:870	862	Lb	0.5	-----	1
ADVA575	2		7.75	184.18:195.57	192.00	Oz	1.1	-----	
RECOVER	1		3.00	71.30:75.70	74.00	Oz	0.7	-----	
VMAR-3	5		3.00	63.50:83.50	74.00	Oz	0.7	-----	
Prewet				40.6:41.2	40.9	Ga	0.2	-----	
Water				17.3:17.6	18.1	Ga	4.0	-----	
Dry Mixing			0:30		0:30	s			
Wet Mixing			1:45		3:44	s			
Total Mixing			5:13		5:13	s			
Total Moisture:			26.3	92.0	92.7	Ga	0.7		
Water/Cement:			0.313	0.314					

Table E.1. Summary of Strong Soil Test Results for Establishing Installation Procedure.

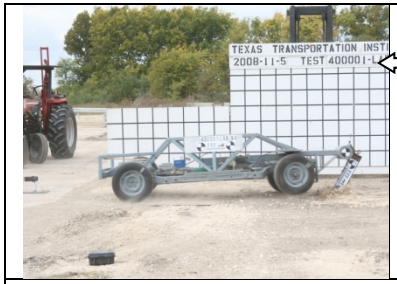

Dynamic Setup

Post-Test Photo of post

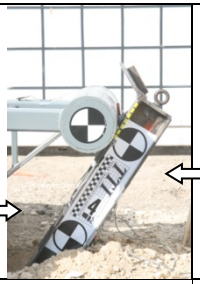

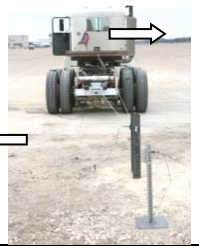

Post-Test Photo

Static Load Test



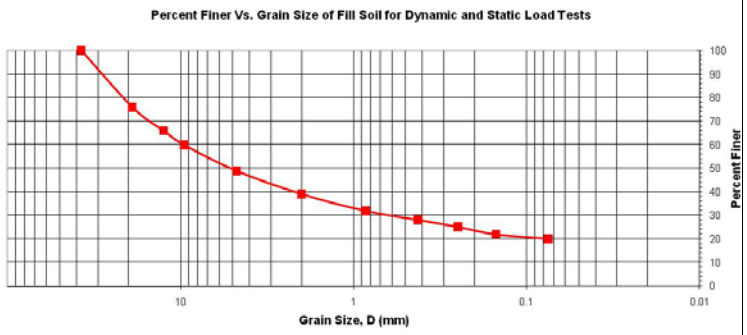

Dynamic Test Installation Details

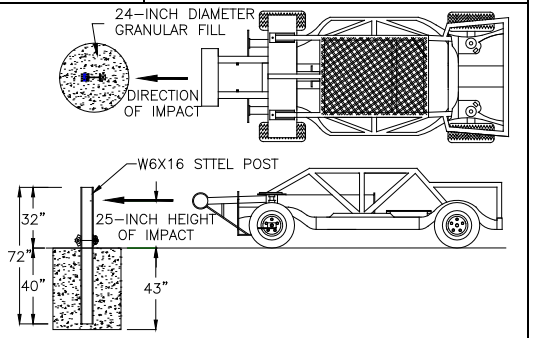

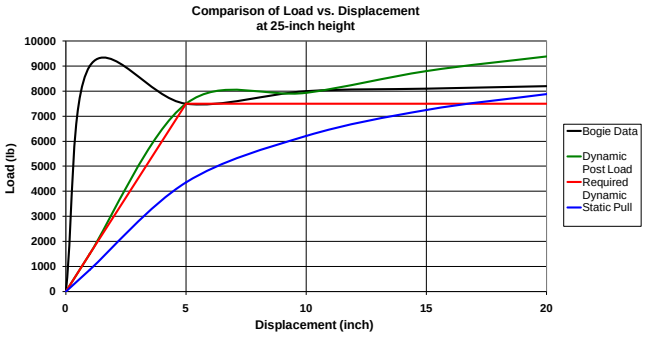

Static Load Test Installation Details

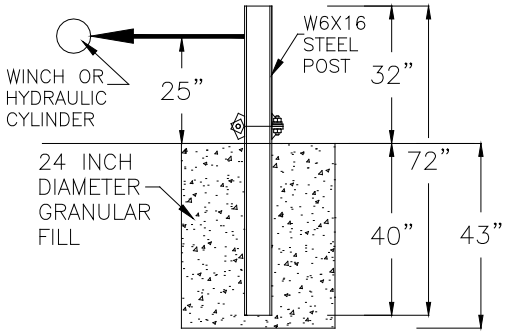

Date	2008-11-05
Test Facility and Site Location	TTI Proving Ground, 3100 SH 47, Bryan, TX 77807
In Situ Soil Description (ASTM D2487	Sandy gravel with silty fines
Fill Material Description (ASTM D2487) and sieve analysis	AASHTO Grade B Soil-Aggregate (see sieve analysis above)
Description of Fill Placement Procedure	6-inch lifts tamped with a pneumatic compactor
Bogie Weight	5009 lb
Impact Velocity	20.5 mph

Table E.2. Test Day Static Soil Strength Documentation for Test No. 469468-5-1.

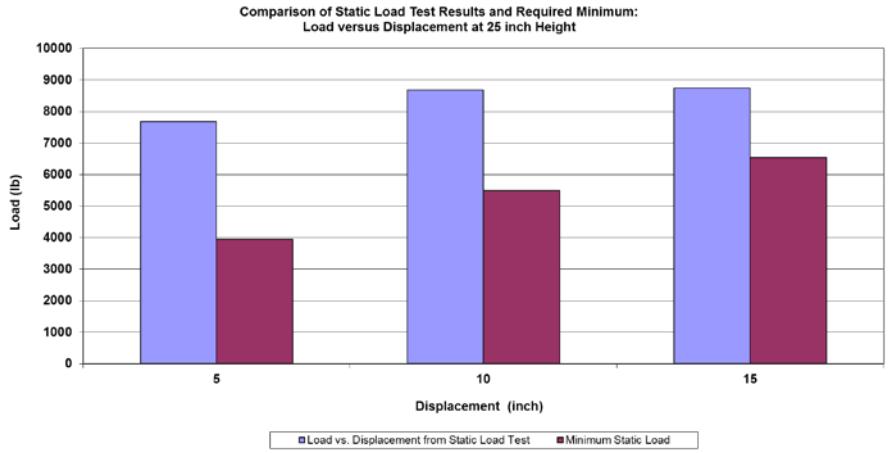



Static Load Setup

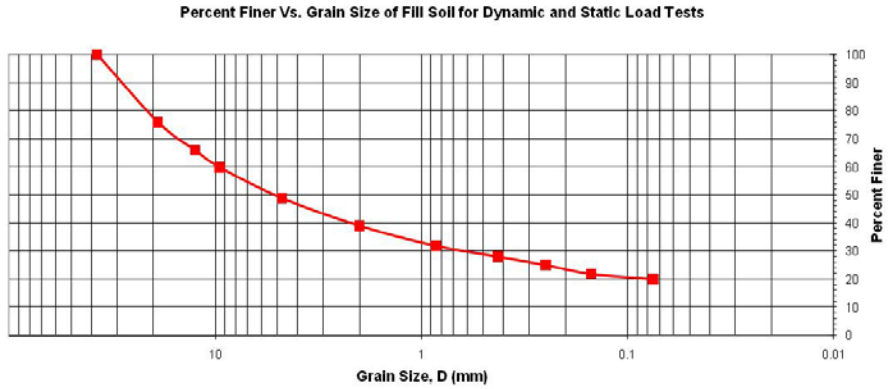



Post-Test Photo of Post

Date	2017-11-27
Test Facility and Site Location	TTI Proving Ground – 3100 SH 47, Bryan, Tx
In Situ Soil Description (ASTM D2487)	Sandy gravel with silty fines
Fill Material Description (ASTM D2487) and sieve analysis	AASHTO Grade B Soil-Aggregate (see sieve analysis)
Description of Fill Placement Procedure	6-inch lifts tamped with a pneumatic compactor

E.4 VEHICLE PROPERTIES AND INFORMATION

Table E.3. Vehicle Properties for Test No. 469468-5-1.

Date: 2017-11-27 Test No.: 469468-5-1 VIN No.: 1C6RD6FT6CS235745

Year: 2012 Make: Dodge Model: RAM 1500

Tire Size: 265/70R17 Tire Inflation Pressure: 35 psi

Tread Type: Highway Odometer: 175993

Note any damage to the vehicle prior to test: None

• Denotes accelerometer location.

NOTES: None

Engine Type: V-8
Engine CID: 5.7 liter

Transmission Type:
x Auto or ___ Manual
___ FWD x RWD ___ 4WD

Optional Equipment:
None

Dummy Data:
Type: None
Mass: NA
Seat Position: NA

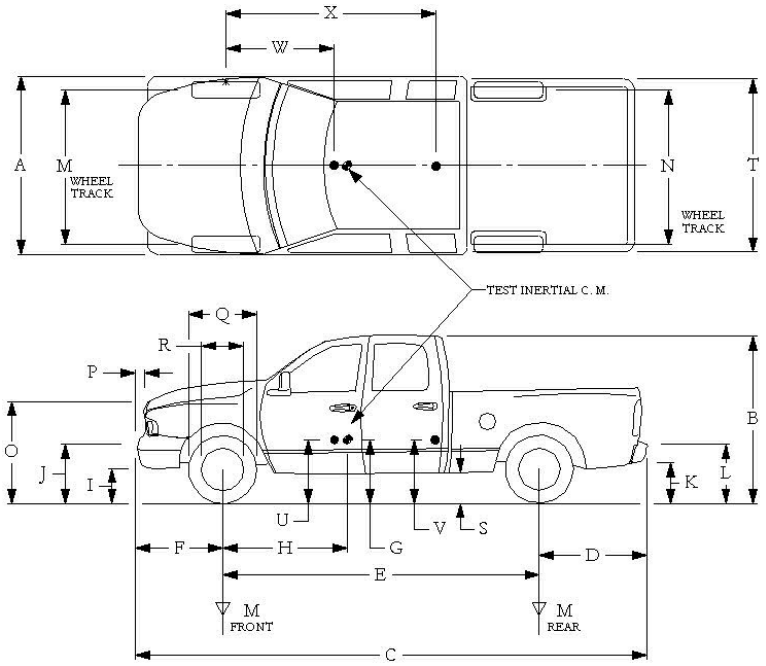

Geometry: inches

A	78.50	F	40.00	K	20.00	P	3.00	U	27.25
B	74.00	G	29.00	L	30.00	Q	30.50	V	30.00
C	227.50	H	61.30	M	68.50	R	18.00	W	61.30
D	44.00	I	11.75	N	68.00	S	12.75	X	77.50
E	140.50	J	27.00	O	46.00	T	77.00		

Wheel Center Height Front	14.75	Wheel Well Clearance (Front)	6.00	Bottom Frame Height - Front	12.00
Wheel Center Height Rear	14.75	Wheel Well Clearance (Rear)	9.25	Bottom Frame Height - Rear	25.50

RANGE LIMIT: A=78 ±2 inches; C=237 ±13 inches; E=148 ±12 inches; F=39 ±3 inches; G = > 28 inches; H = 63 ±4 inches; O=43 ±4 inches; M+N/2=67 ±1.5 inches

GVWR Ratings:		**Mass:** lb	Curb	Test Inertial	Gross Static
Front	3700	M_{front}	2878	2834	--
Back	3900	M_{rear}	2058	2195	--
Total	6700	M_{Total}	4936	5029	--

(Allowable Range for TIM and GSM = 5000 lb ±110 lb)

Mass Distribution:
lb LF: 1394 RF: 1440 LR: 1117 RR: 1078

Table E.4. Measurements of Vehicle Vertical CG for Test No. 469468-5-1.

Date: 2017-11-27 Test No.: 469468-5-1 VIN: 1C6RD6FT6CS235745

Year: 2012 Make: Dodge Model: RAM 1500

Body Style: Quad Cab Mileage: 175993

Engine: 5.7 liter V-8 Transmission: Automatic

Fuel Level: Empty Ballast: 133 lb (440 lb max)

Tire Pressure: Front: 35 psi Rear: 35 psi Size: 265/70R17

Measured Vehicle Weights: (lb)								
LF:	1450	RF:	1410	Front Axle:	2860			
LR:	1073	RR:	1087	Rear Axle:	2160			
Left:	2523	Right:	2497	Total:	5020			
				5000 ±110 lb allowed				
Wheel Base:	140.5 inches	Track: F:	68.5 inches	R:	68 inches			
148 ±12 inches allowed			Track = (F+R)/2 = 67 ±1.5 inches allowed					
Center of Gravity, SAE J874 Suspension Method								
X:	60.45 inches	Rear of Front Axle	(63 ±4 inches allowed)					
Y:	-0.18 inches	Left -	Right +	of Vehicle Centerline				
Z:	29 inches	Above Ground	(minumum 28.0 inches allowed)					

Hood Height: 46.00 inches
43 ±4 inches allowed

Front Bumper Height: 27.00 inches

Front Overhang: 40.00 inches
39 ±3 inches allowed

Rear Bumper Height: 30.00 inches

Overall Length: 227.50 inches
237 ±13 inches allowed

Table E.5. Exterior Crush Measurements of Vehicle for Test No. 469468-5-1.

Date: 2017-11-27 Test No.: 469468-5-1 VIN No.: 1C6RD6FT6CS235745

Year: 2012 Make: Dodge Model: RAM 1500

VEHICLE CRUSH MEASUREMENT SHEET[1]

Complete When Applicable	
End Damage	Side Damage
Undeformed end width _____ Corner shift: A1 _____ A2 _____ End shift at frame (CDC) (check one) < 4 inches _____ ≥ 4 inches _____	Bowing: B1 _____ X1 _____ B2 _____ X2 _____ Bowing constant $\frac{X1+X2}{2}$ = _____

Note: Measure C_1 to C_6 from Driver to Passenger Side in Front or Rear impacts – Rear to Front in Side Impacts.

Specific Impact Number	Plane* of C-Measurements	Direct Damage		Field L**	C_1	C_2	C_3	C_4	C_5	C_6	±D
		Width** (CDC)	Max*** Crush								
1	Side plane at bumper ht	20	10	24	10	7	4	2	11	0	16
	Measurements recorded										
	in inches										

[1]Table taken from National Accident Sampling System (NASS).

*Identify the plane at which the C-measurements are taken (e.g., at bumper, above bumper, at sill, above sill, at beltline, etc.) or label adjustments (e.g., free space).

Free space value is defined as the distance between the baseline and the original body contour taken at the individual C locations. This may include the following: bumper lead, bumper taper, side protrusion, side taper, etc.
Record the value for each C-measurement and maximum crush.

**Measure and document on the vehicle diagram the beginning or end of the direct damage width and field L (e.g., side damage with respect to undamaged axle).

***Measure and document on the vehicle diagram the location of the maximum crush.

Note: Use as many lines/columns as necessary to describe each damage profile.

Table E.6. Occupant Compartment Measurements of Vehicle for Test No. 469468-5-1.

Date: 2017-11-27 Test No.: 469468-5-1 VIN No.: 1C6RD6FT6CS235745

Year: 2012 Make: Dodge Model: RAM 1500

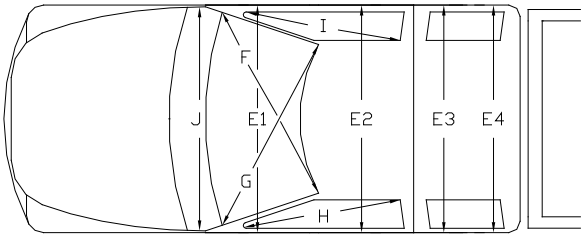

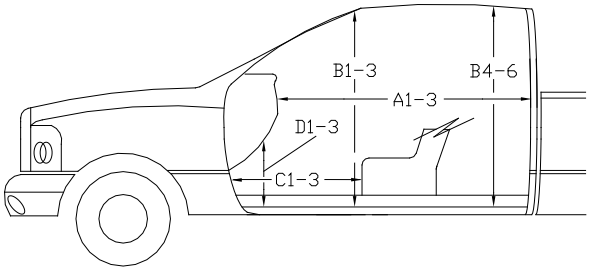

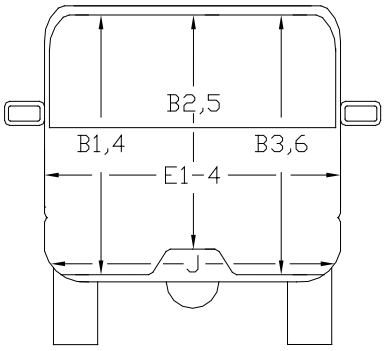

*Lateral area across the cab from driver's side kickpanel to passenger's side kickpanel.

OCCUPANT COMPARTMENT DEFORMATION MEASUREMENT

	Before	After (inches)	Differ.
A1	65.00	65.00	0.00
A2	62.50	62.50	0.00
A3	65.50	65.50	0.00
B1	45.00	45.00	0.00
B2	38.00	36.00	-2.00
B3	45.00	40.00	-5.00
B4	39.50	35.00	-3.50
B5	43.00	40.00	-3.00
B6	39.50	36.00	-3.50
C1	26.00	26.00	0.00
C2	----	----	0.00
C3	26.00	26.00	0.00
D1	11.00	11.00	0.00
D2	----	----	0.00
D3	11.25	11.25	0.00
E1	58.00	58.00	0.00
E2	63.50	63.50	0.00
E3	63.50	64.50	+1.50
E4	63.50	64.50	+1.50
F	59.00	59.00	0.00
G	59.00	59.00	0.00
H	37.50	37.50	0.00
I	37.50	37.50	0.00
J*	23.25	23.25	0.00

E.5 SEQUENTIAL PHOTOGRAPHS

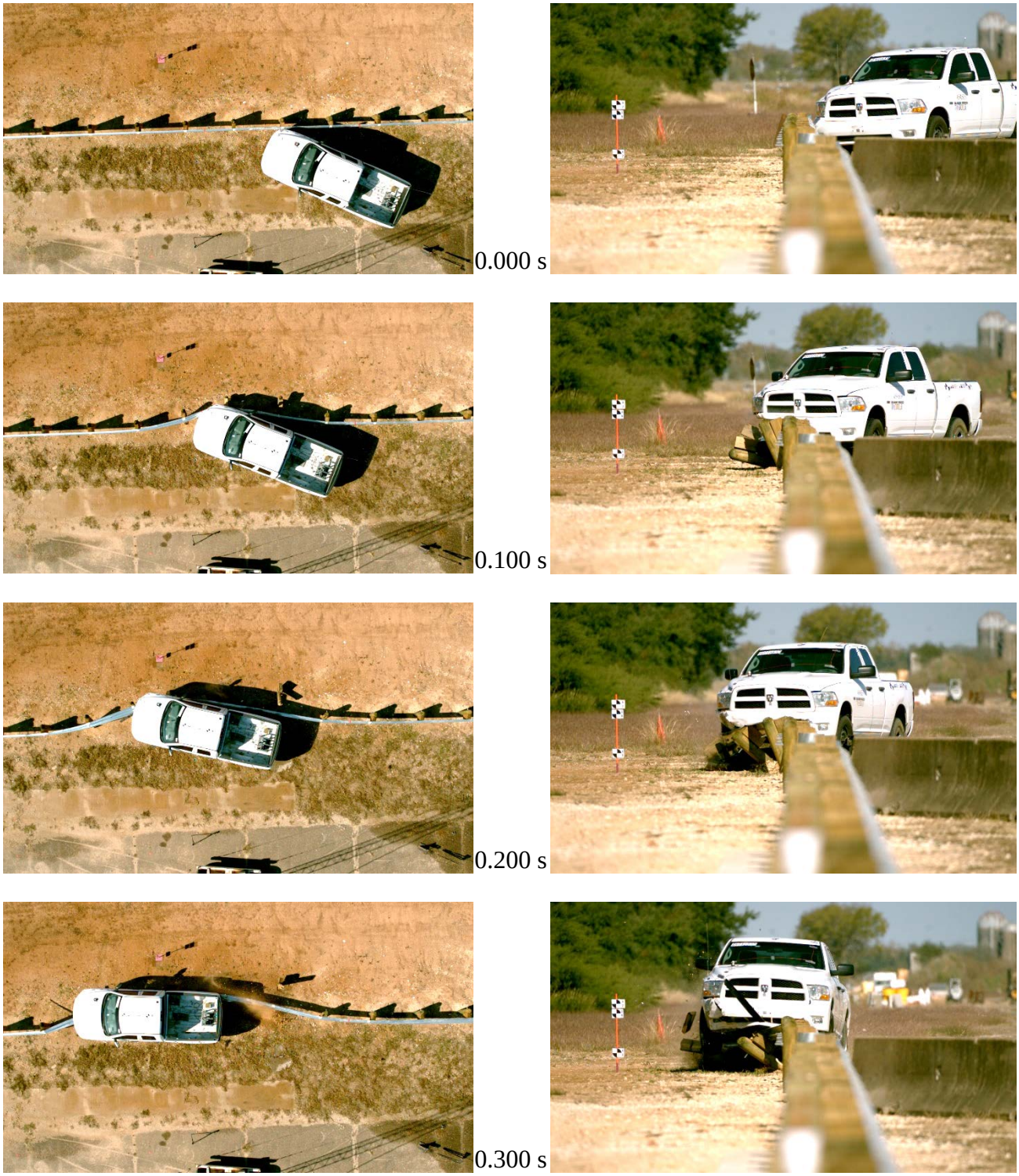

Figure E.1. Sequential Photographs for Test No. 469468-5-1 (Overhead and Frontal Views).

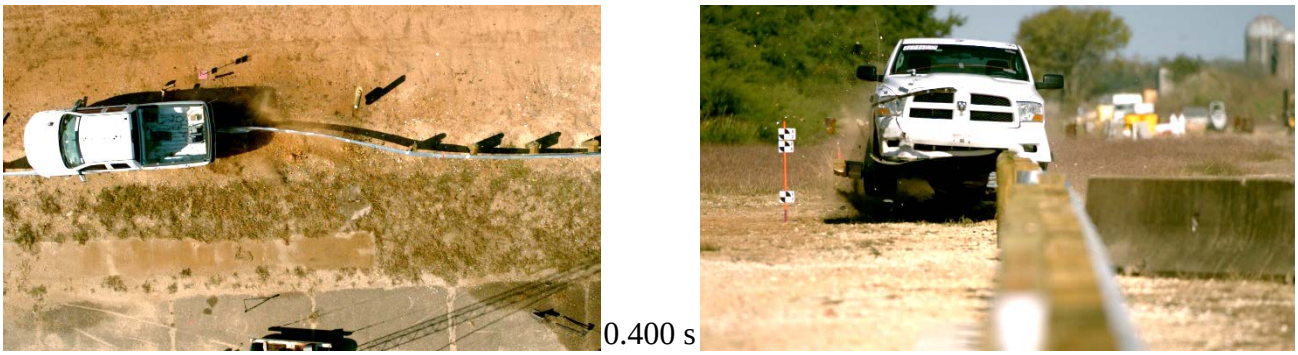
0.400 s

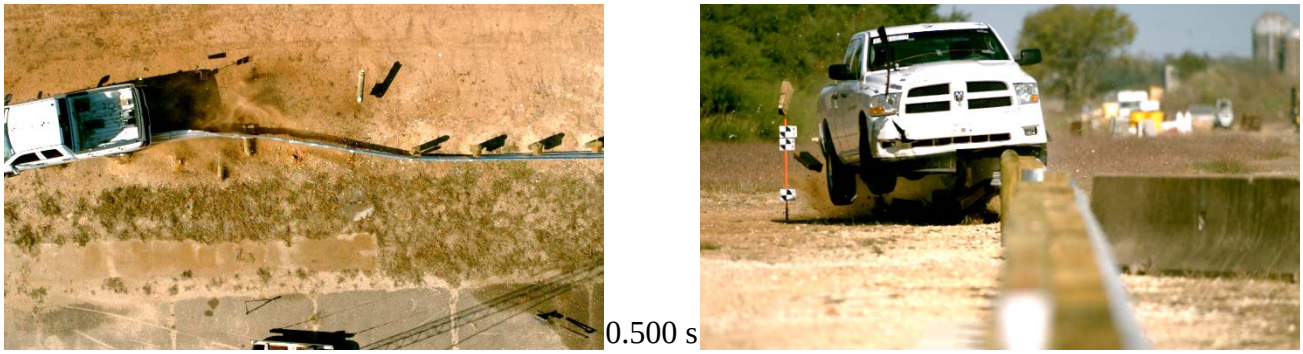
0.500 s

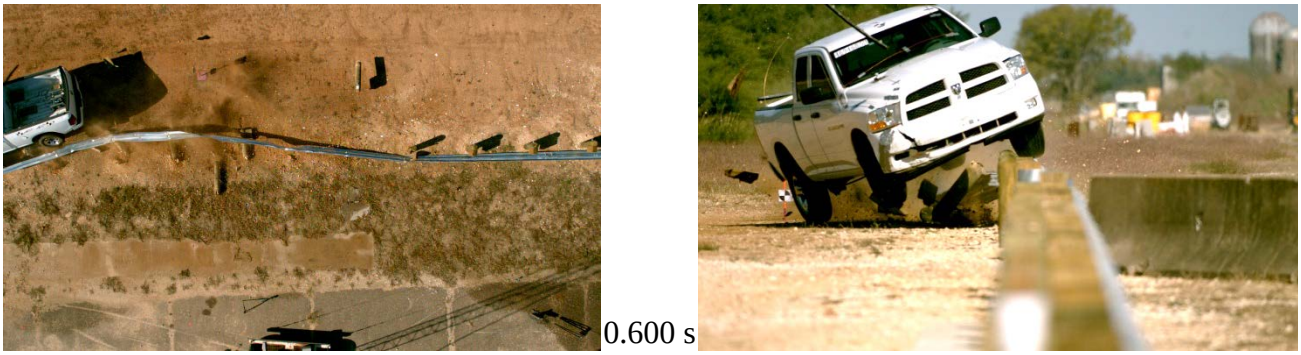
0.600 s

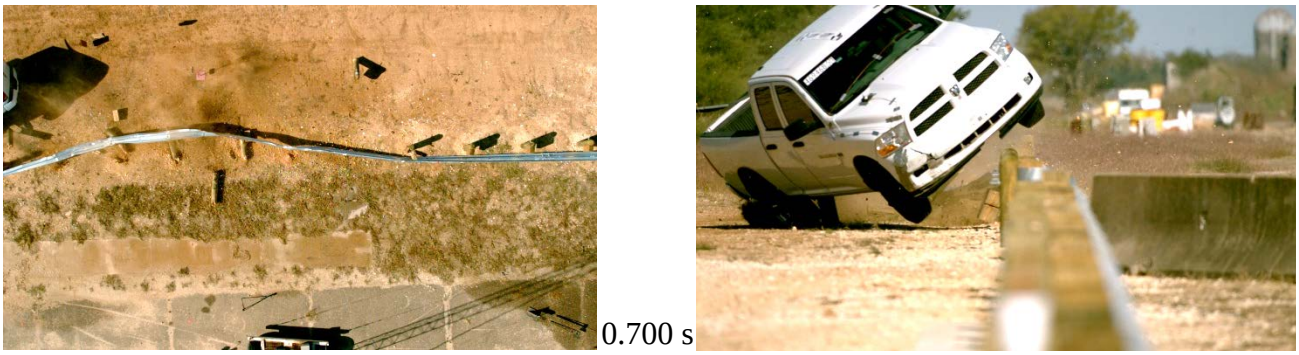
0.700 s

Figure E.1. Sequential Photographs for Test No. 469468-5-1 (Overhead and Frontal Views) (Continued).



0.000 s



0.400 s



0.100 s



0.500 s



0.200 s



0.600 s



0.300 s



0.700 s

Figure E.2. Sequential Photographs for Test No. 469468-5-1 (Rear View).

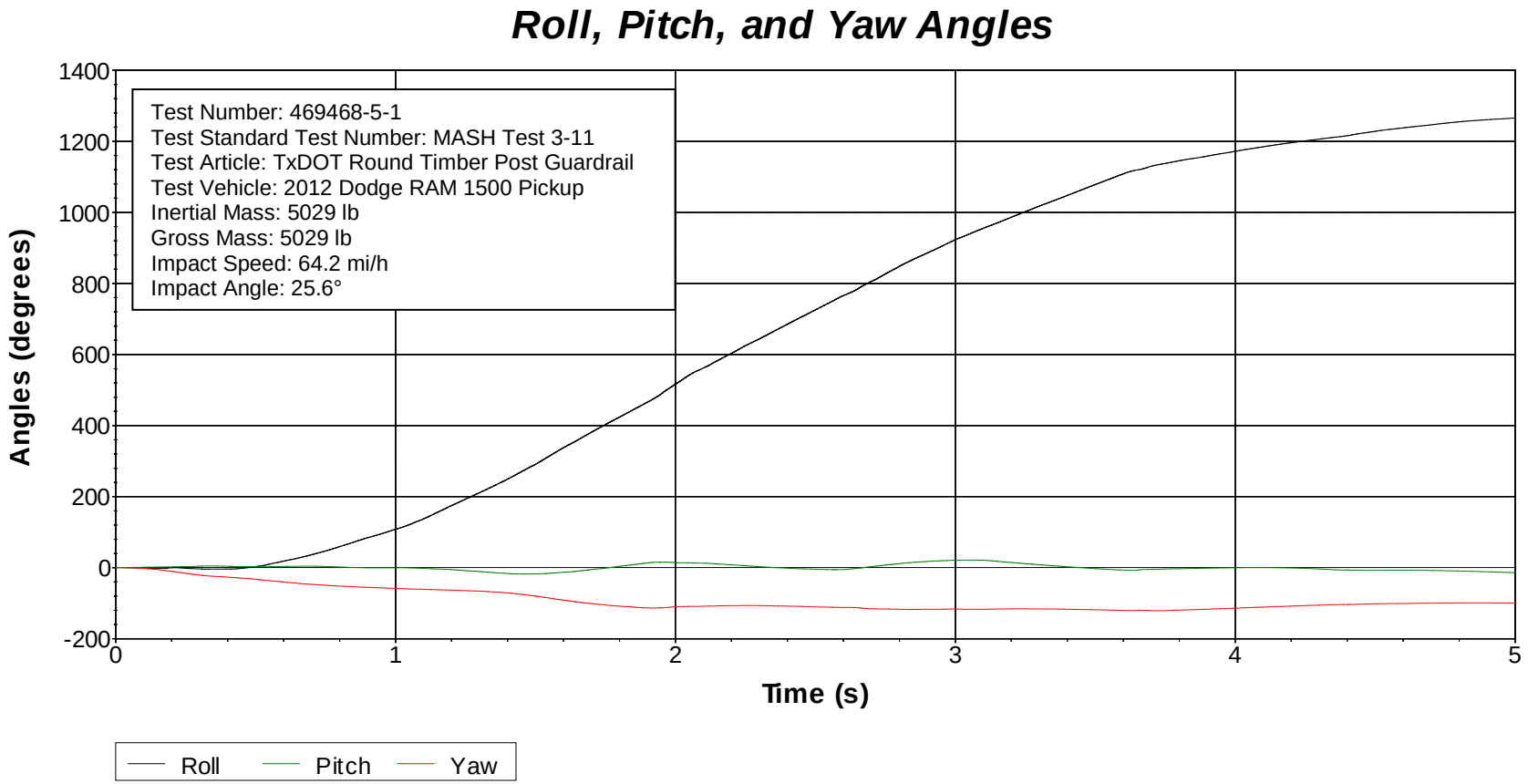

Axes are vehicle-fixed.
Sequence for determining orientation:

1. Yaw.
2. Pitch.
3. Roll.

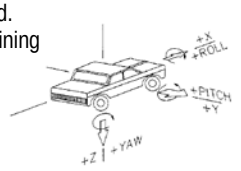

Figure E.3. Vehicle Angular Displacements for Test No. 469468-5-1.

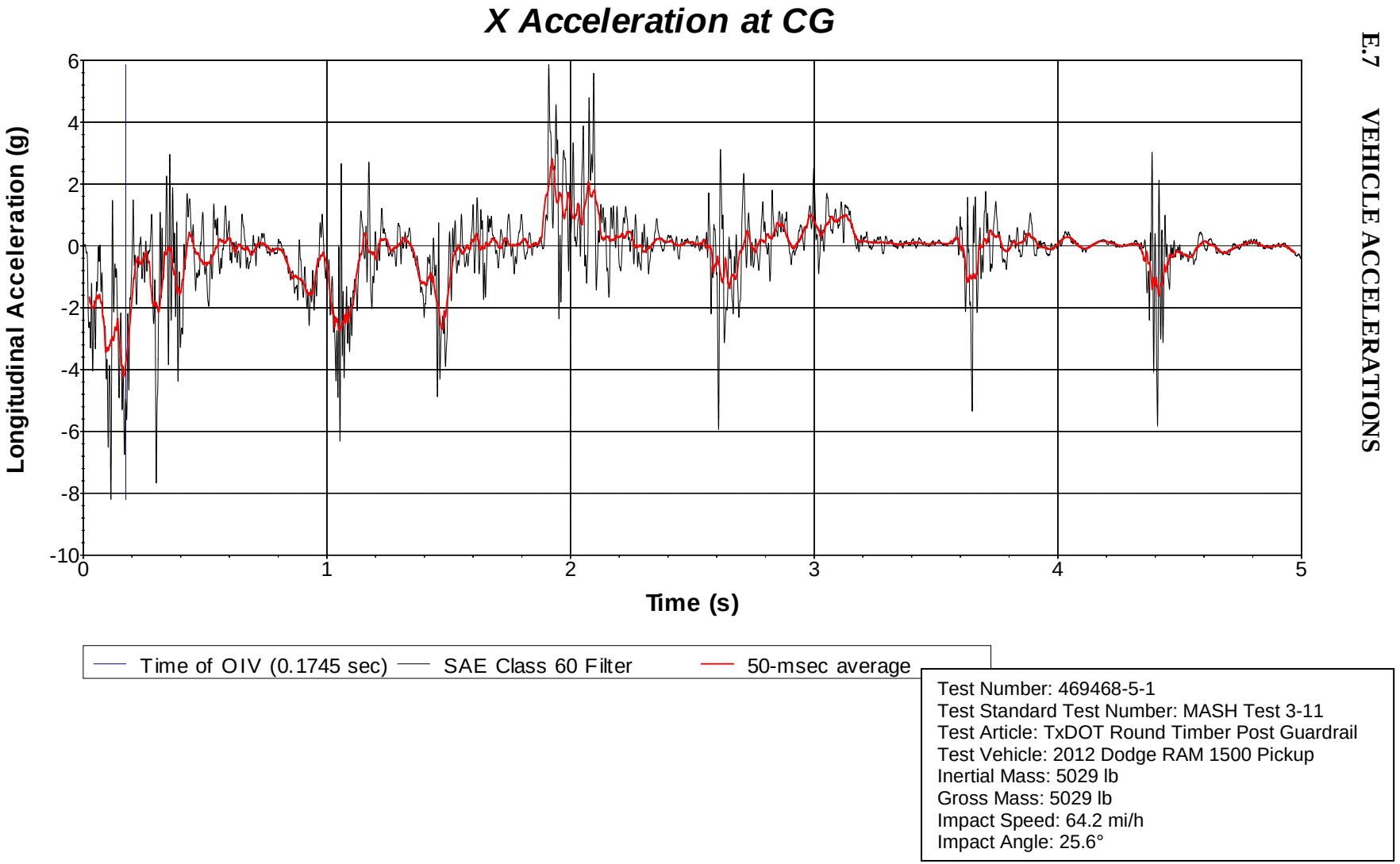

Figure E.4. Vehicle Longitudinal Accelerometer Trace for Test No. 469468-5-1 (Accelerometer Located at Center of Gravity).

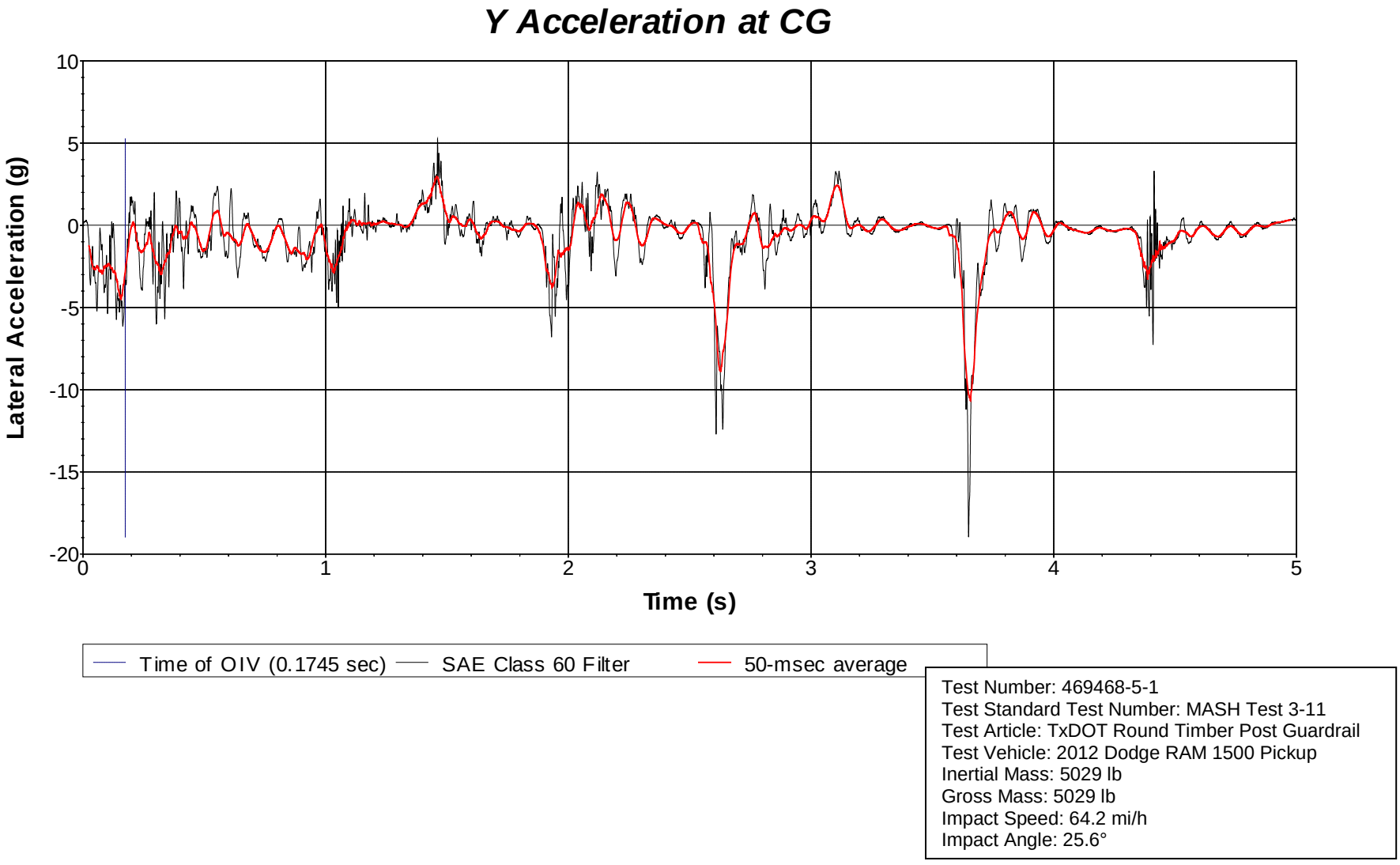

Figure E.5. Vehicle Lateral Accelerometer Trace for Test No. 469468-5-1 (Accelerometer Located at Center of Gravity).

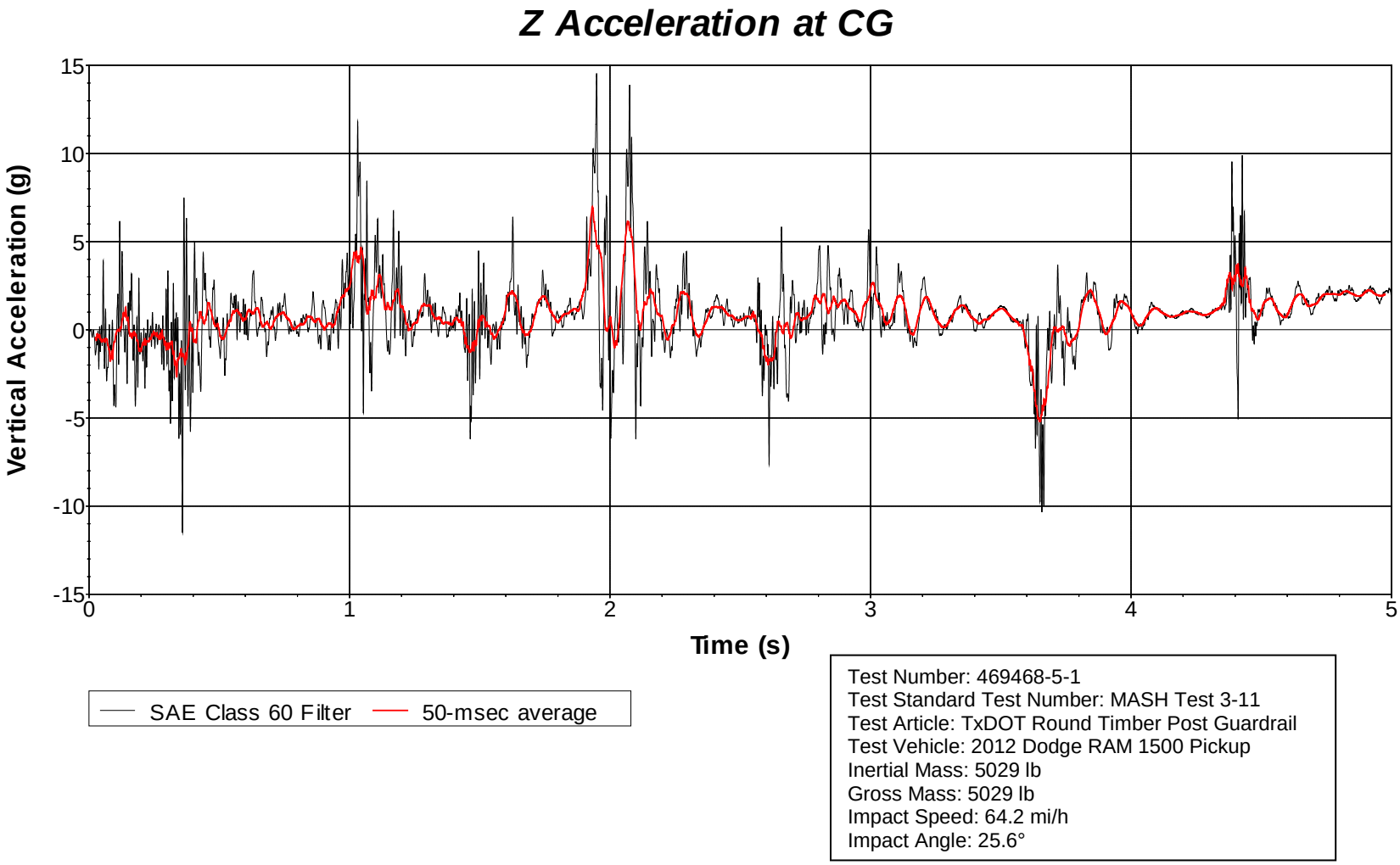

Figure E.6. Vehicle Vertical Accelerometer Trace for Test No. 469468-5-1 (Accelerometer Located at Center of Gravity).

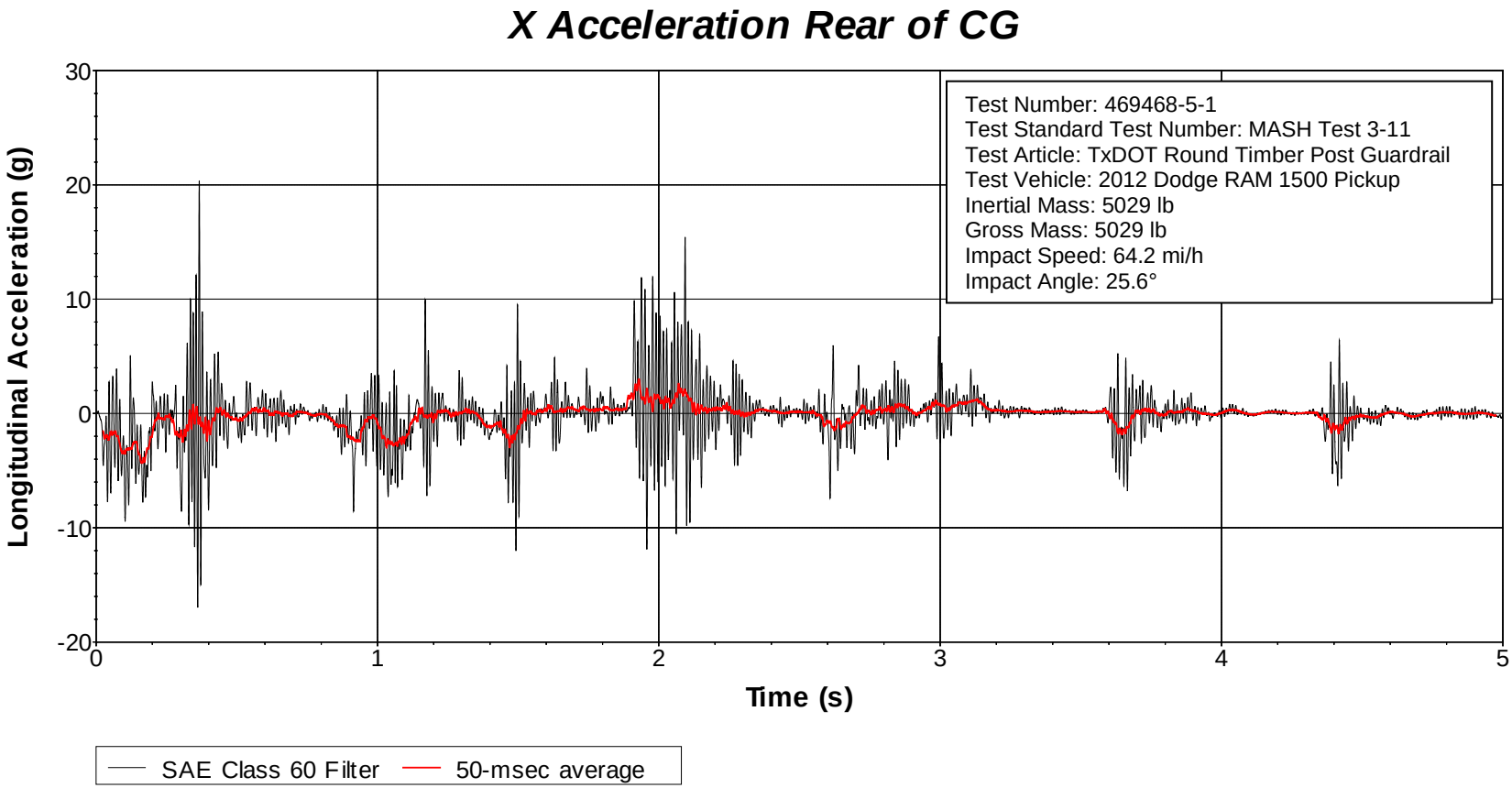

Figure E.7. Vehicle Longitudinal Accelerometer Trace for Test No. 469468-5-1 (Accelerometer Located Rear of Center of Gravity).

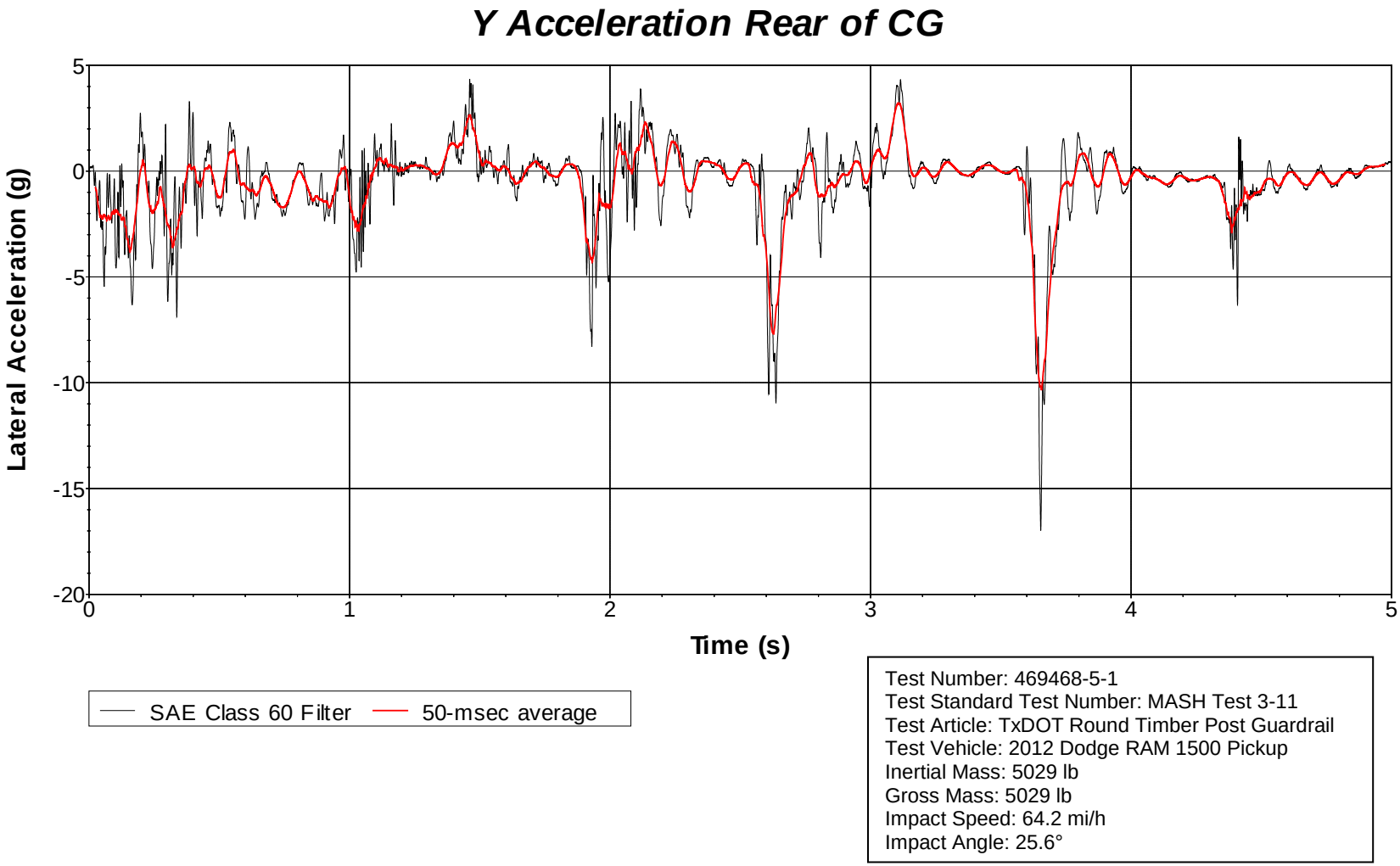

Figure E.8. Vehicle Lateral Accelerometer Trace for Test No. 469468-5-1 (Accelerometer Located Rear of Center of Gravity).

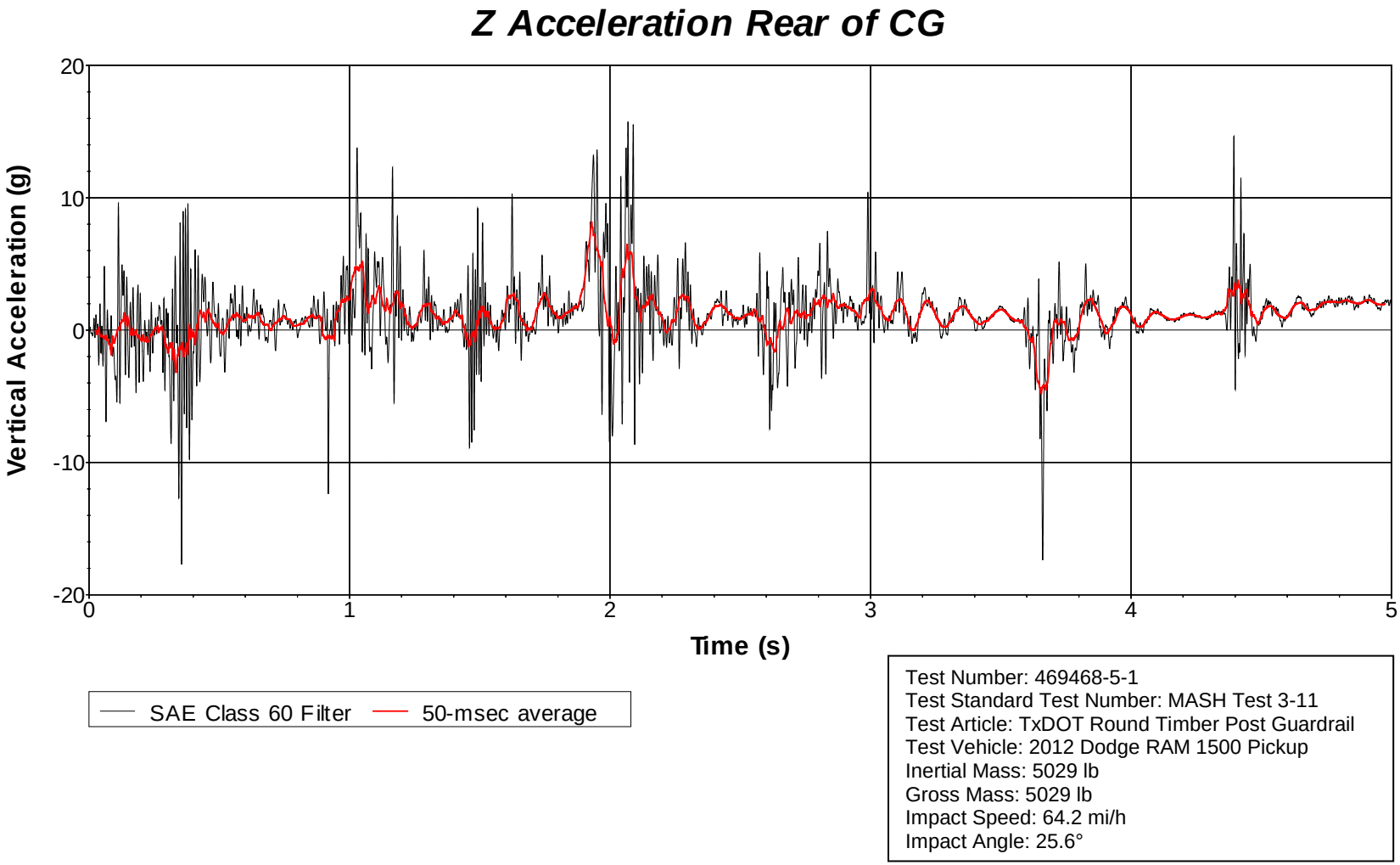

Figure E.9. Vehicle Vertical Accelerometer Trace for Test No. 469468-5-1 (Accelerometer Located Rear of Center of Gravity).

APPENDIX F. TXDOT 42-INCH SINGLE-SLOPE CONCRETE MEDIAN BARRIER WITH LIGHT POLE

F.1 DETAILS OF TXDOT SINGLE SLOPE CMB WITH LIGHT POLE

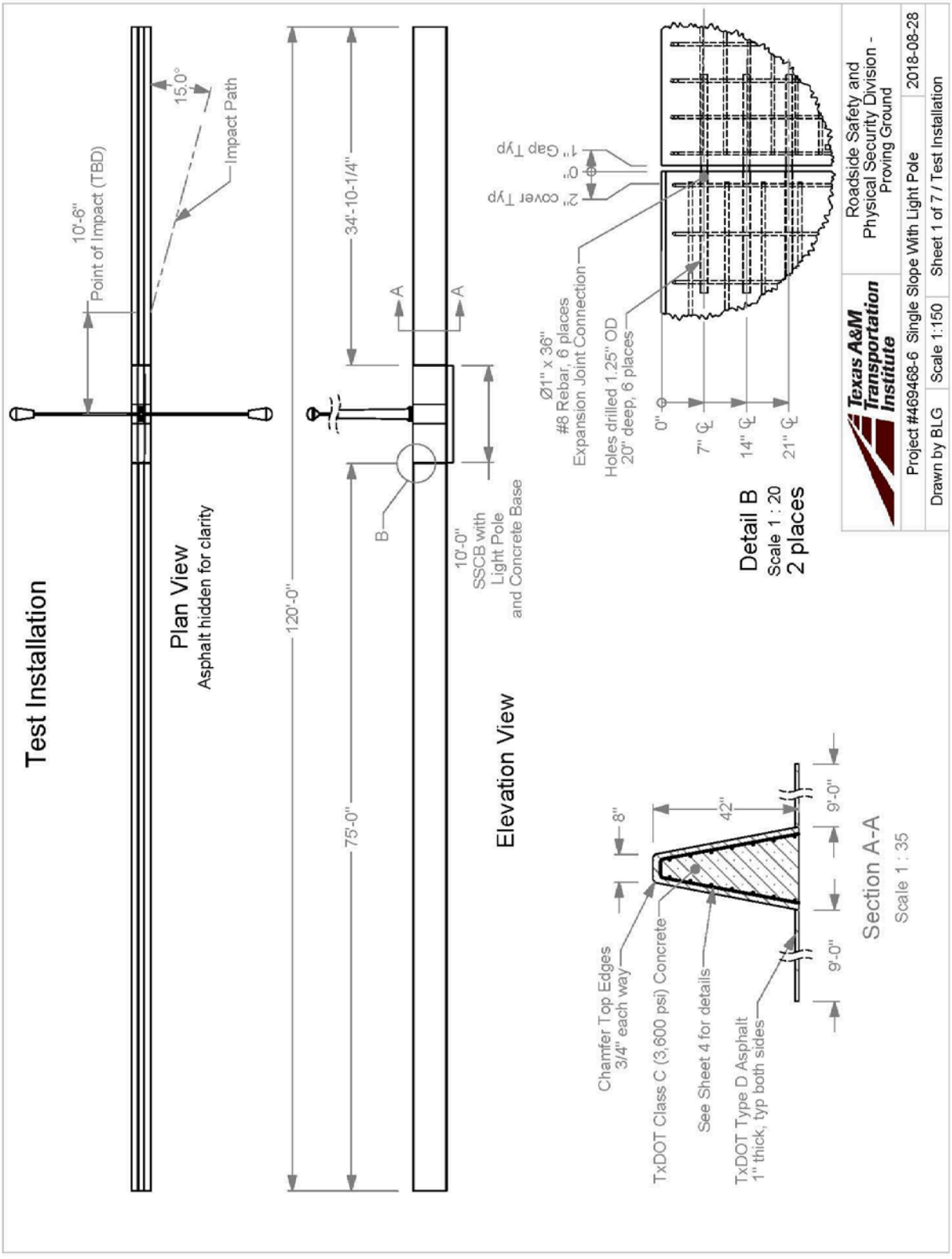

11'-5-5/16"
Pipe, 2" sch. 40
Plate, 2" x 5/16"
3-9/16"
3/16
typ
4 places
Luminaire Arm Dimensions
Info from TxDOT Drawing RIP(3)-11
12'-0" Nominal Arm Length Shown
Pipe, 1-1/2" sch. 40
SSCB with Pole
43'-0"
42"
C
8"
24"
10'-0"
Pole detail
page 5
SSCB details
page 4
Concrete Anchor Detail on Sheet 6
1/4" to 1/2" of Unthreaded
Rod proud of top of concrete
6" of
stud projecting from
top of concrete
27" to top of
bottom template
Detail C
Scale 1 : 10
Texas A&M Transportation Institute
Roadside Safety and
Physical Security Division -
Proving Ground
Project #469468-6 Single Slope With Light Pole
2018-08-28
Drawn by BLG
Scale 1:100
Sheet 2 of 7 / SSCB with Pole
T:\1-ProjectFiles\469468 - TxDOT - Bligh\6 Light Pole on SSCB\Drafting, 469468-6\2018-08-23\469468-6 Drawing, 2018-08-28

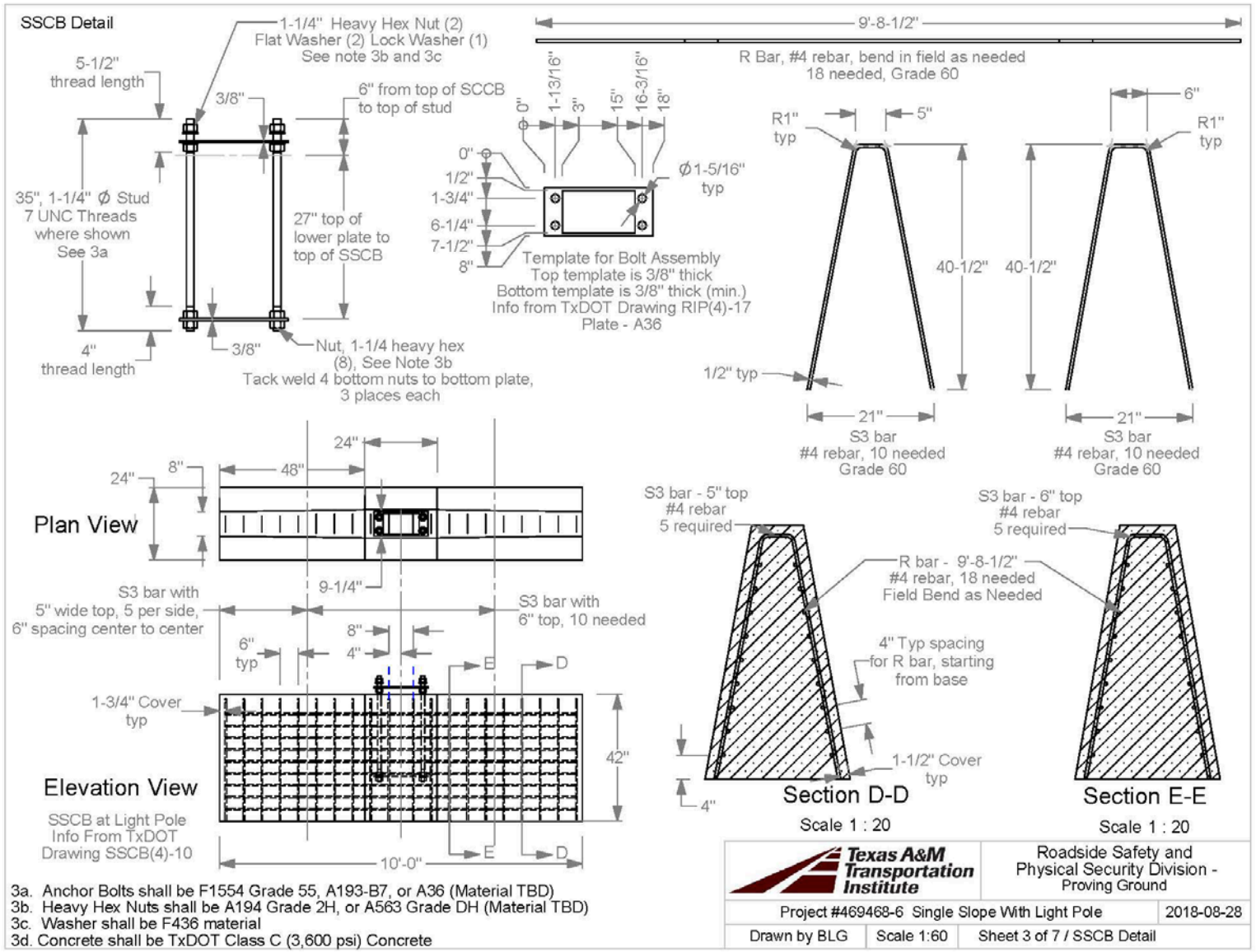
SSCB Detail
1-1/4" Heavy Hex Nut (2)
Flat Washer (2) Lock Washer (1)
See note 3b and 3c
5-1/2" thread length
3/8"
6" from top of SCCB to top of stud
35", 1-1/4" Ø Stud
7 UNC Threads
where shown
See 3a
27" top of lower plate to top of SSCB
4" thread length
3/8"
Nut, 1-1/4 heavy hex (8), See Note 3b
Tack weld 4 bottom nuts to bottom plate, 3 places each
0"
1-13/16"
3"
15"
16-3/16"
18"
0"
1/2"
1-3/4"
6-1/4"
7-1/2"
8"
Ø1-5/16" typ
Template for Bolt Assembly
Top template is 3/8" thick
Bottom template is 3/8" thick (min.)
Info from TxDOT Drawing RIP(4)-17
Plate - A36
9'-8-1/2"
R Bar, #4 rebar, bend in field as needed
18 needed, Grade 60
R1" typ
5"
40-1/2"
1/2" typ
21"
S3 bar
#4 rebar, 10 needed
Grade 60
6"
R1" typ
40-1/2"
21"
S3 bar
#4 rebar, 10 needed
Grade 60
24"
8"
48"
24"
Plan View
9-1/4"
S3 bar with
5" wide top, 5 per side,
6" spacing center to center
S3 bar with
6" top, 10 needed
6" typ
8"
4"
B
D
1-3/4" Cover typ
42"
Elevation View
SSCB at Light Pole
Info From TxDOT
Drawing SSCB(4)-10
E
D
10'-0"
S3 bar - 5" top
#4 rebar
5 required
R bar - 9'-8-1/2"
#4 rebar, 18 needed
Field Bend as Needed
4" Typ spacing
for R bar, starting
from base
1-1/2" Cover typ
4"
Section D-D
Scale 1 : 20
S3 bar - 6" top
#4 rebar
5 required
Section E-E
Scale 1 : 20
3a. Anchor Bolts shall be F1554 Grade 55, A193-B7, or A36 (Material TBD)
3b. Heavy Hex Nuts shall be A194 Grade 2H, or A563 Grade DH (Material TBD)
3c. Washer shall be F436 material
3d. Concrete shall be TxDOT Class C (3,600 psi) Concrete
Texas A&M Transportation Institute
Roadside Safety and Physical Security Division - Proving Ground
Project #469468-6 Single Slope With Light Pole
2018-08-28
Drawn by BLG
Scale 1:60
Sheet 3 of 7 / SSCB Detail
T:\1-ProjectFiles\469468 - TxDOT - Bligh\6 Light Pole on SSCB\Drafting, 469468-6\2018-08-23\469468-6 Drawing, 2018-08-28

Welded Wire Detail

Welded Wire
(Standard Single Slope Barrier) Grade 70

Texas A&M Transportation Institute		Roadside Safety and Physical Security Division - Proving Ground
Project #469468-6 Single Slope With Light Pole		2018-08-28
Drawn by BLG	Scale 1:8	Sheet 4 of 7 / Welded Wire Detail

T:\1-ProjectFiles\469468 - TxDOT - Bligh\6 Light Pole on SSCB\Drafting, 469468-612018-08-23\469468-6 Drawing, 2018-08-28

Pole Detail
Luminaire TBD - Weight no greater than 60 lbs, 2 places
Pole Top Cap
Material: Gray iron casting (A48 Class 30), or Zinc Die Casting (Zonc Alloy No.31), or Aluminum
H see sheet 6
Circular Pole Section
10" Ø at End of Ovalized Section
4.48" Ø at Top
0.1345" Wall thickness
Info from TxDOT Drawings
RIP(2)-17 and RIP(3)-17
Ovalized section, 6' (min) to 7'-6" (max) long
See Baseplate detail for Bottom section ovality details. Info from TxDOT Drawing RIP(4)-17
F
42"
24"
0"
1-3/4"
2-7/16"
8-15/16"
15-7/16"
16-1/8"
17-7/8"
Ø1-1/2" thru, 4 places
0"
1/2"
1-3/4"
4"
6-1/4"
7-1/2"
8"
Baseplate for 48' Mounting height Shown
A572 Grade 50 or A36 Material
Info from TxDOT Drawing RIP(4)-17
Scale 1:10
G
Nut, 1-1/4 heavy hex (8)
A194 Grade 2H or A563 Grade DH
Washer, 1-1/4 lock (4, top only))
Flat Washer 1-1/4" (8)
F436 Material
Baseplate, 1-1/2" thick
G
Detail F
Scale 1 : 10
Tube Thk.
1-1/2"
Tube Thk.
Section G-G
Scale 1 : 10
Texas A&M Transportation Institute
Roadside Safety and Physical Security Division - Proving Ground
Project #469468-6 Single Slope With Light Pole
2018-08-28
Drawn by BLG
Scale 1:100
Sheet 5 of 7 / Pole Detail
T:\1-ProjectFiles\469468 - TxDOT - Bligh-6 Light Pole on SSCB\Drafting, 469468-6\2018-08-23\469468-6 Drawing, 2018-08-28

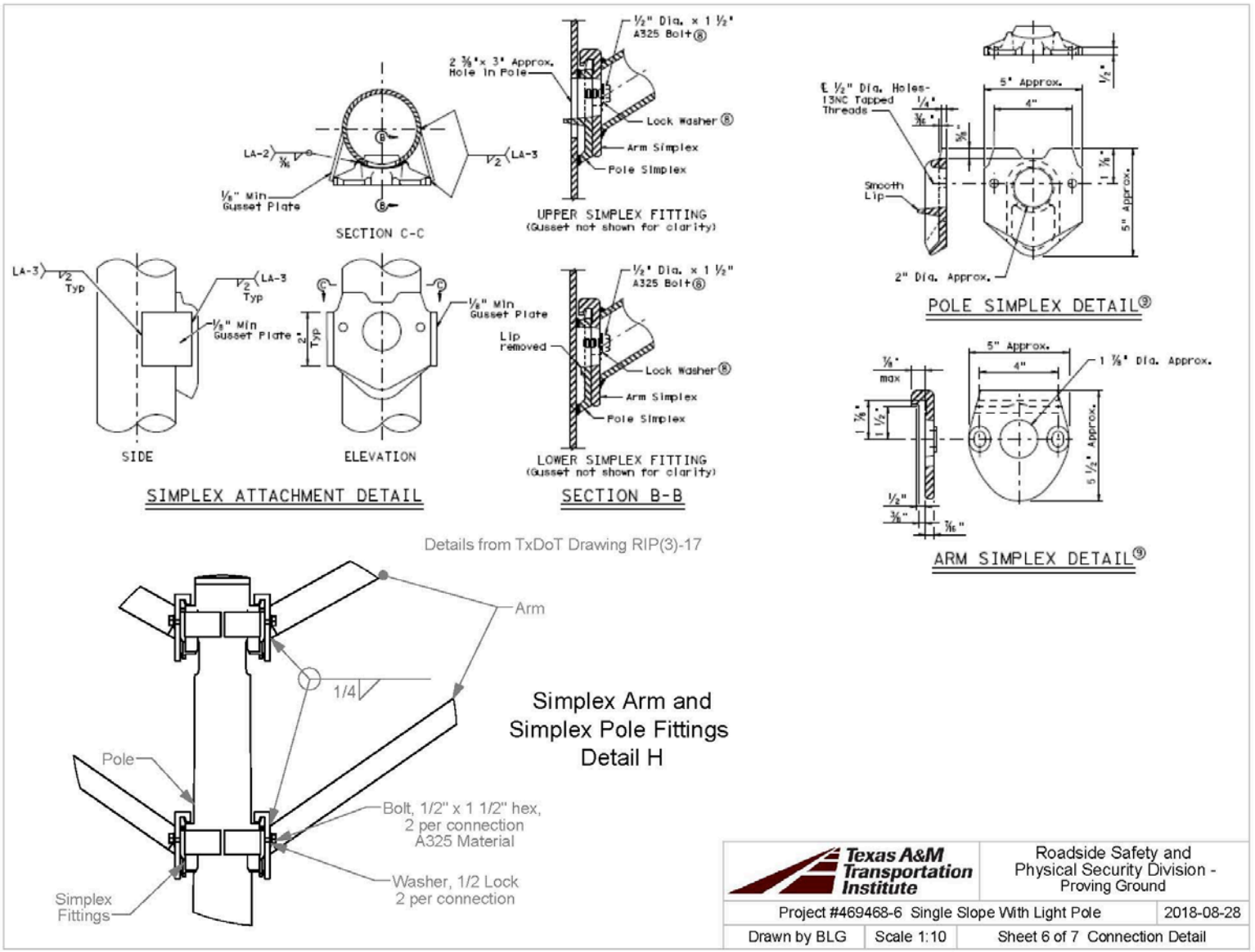

Details from TxDoT Drawing RIP(3)-17

Simplex Arm and Simplex Pole Fittings Detail H

Texas A&M Transportation Institute	Roadside Safety and Physical Security Division - Proving Ground	
Project #469468-6 Single Slope With Light Pole		2018-08-28
Drawn by BLG	Scale 1:10	Sheet 6 of 7 Connection Detail

T:\1-ProjectFiles\469468 - TxDOT - Bligh-6 Light Pole on SSCB\Drafting, 469468-6\2018-08-23\469468-6 Drawing, 2018-08-28

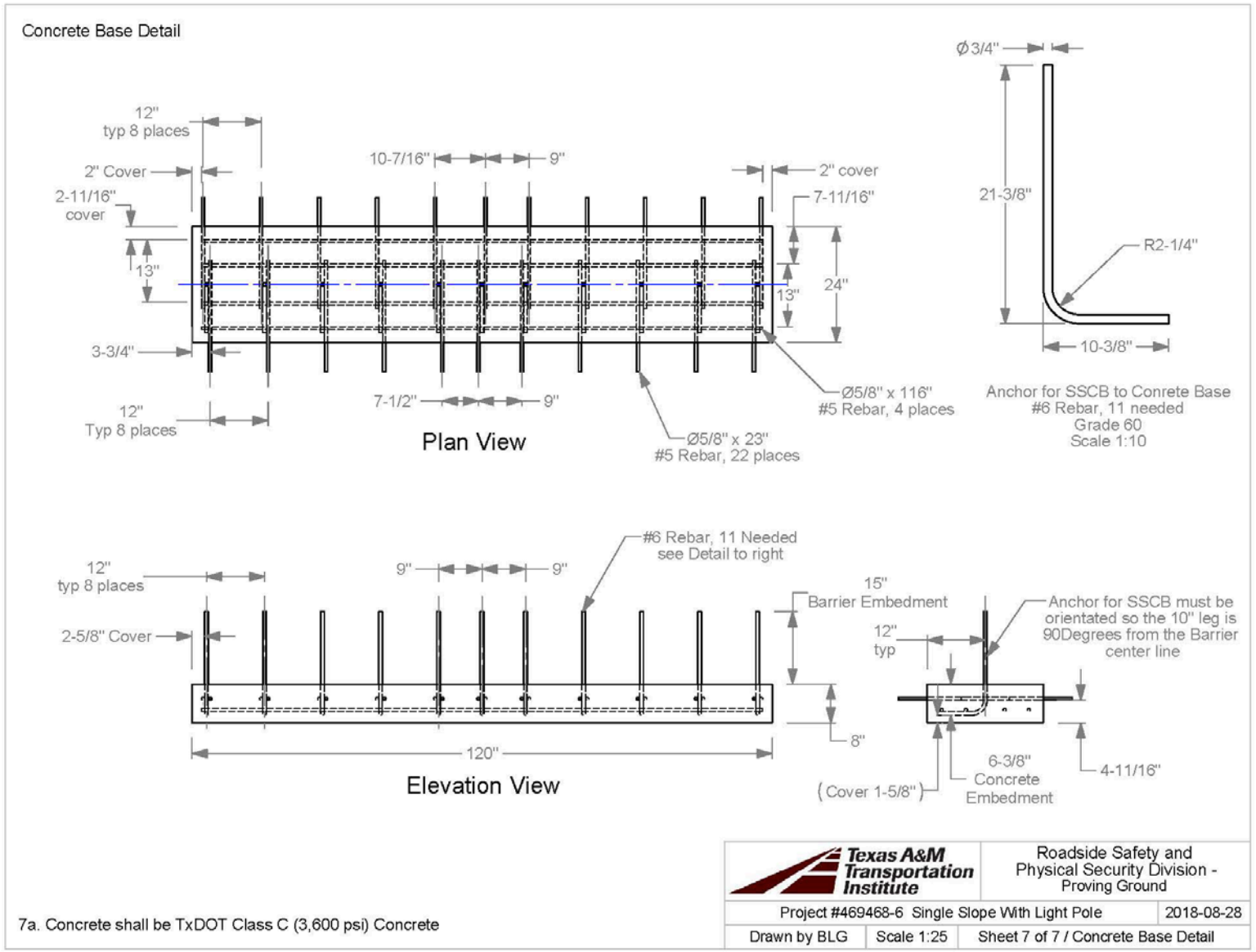
Concrete Base Detail
12" typ 8 places
2" Cover
2-11/16" cover
13"
3-3/4"
12" Typ 8 places
10-7/16"
9"
7-1/2"
9"
2" cover
7-11/16"
13"
24"
Ø5/8" x 116" #5 Rebar, 4 places
Ø5/8" x 23" #5 Rebar, 22 places
Plan View
Ø3/4"
21-3/8"
R2-1/4"
10-3/8"
Anchor for SSCB to Conrete Base
#6 Rebar, 11 needed
Grade 60
Scale 1:10
12" typ 8 places
2-5/8" Cover
9"
9"
#6 Rebar, 11 Needed see Detail to right
120"
8"
Elevation View
15" Barrier Embedment
12" typ
Anchor for SSCB must be orientated so the 10" leg is 90Degrees from the Barrier center line
(Cover 1-5/8")
6-3/8" Concrete Embedment
4-11/16"
7a. Concrete shall be TxDOT Class C (3,600 psi) Concrete
Texas A&M Transportation Institute
Roadside Safety and Physical Security Division - Proving Ground
Project #469468-6 Single Slope With Light Pole
2018-08-28
Drawn by BLG
Scale 1:25
Sheet 7 of 7 / Concrete Base Detail
T:\1-ProjectFiles\469468 - TxDOT - Bligh-6 Light Pole on SSCB\Drafting, 469468-6\2018-08-23\469468-6 Drawing, 2018-08-28

CMC STEEL TEXAS
1 STEEL MILL DRIVE
SEGUIN TX 78155-7510

CERTIFIED MILL TEST REPORT
For additional copies call
830-372-8771

We hereby certify that the test results presented here are accurate and conform to the reported grade specification

TOMMY HEWITT
Quality Assurance Manager

HEAT NO.:3078548 SECTION: REBAR 25MM (#8) 20'0" 420/60 GRADE: ASTM A615-16 Gr 420/60 ROLL DATE: 03/18/2018 MELT DATE: 03/14/2018 Cert. No.: 82436007 / 078548A041	SOLD TO	CMC Construction Svcs College Stati 10650 State Hwy 30 College Station TX US 77845-7950 979 774 5900	SHIP TO	CMC Construction Svcs College Stati 10650 State Hwy 30 College Station TX US 77845-7950 979 774 5900	Delivery#: 82436007 BOL#: 72550550 CUST PO#: 787032 CUST P/N: DLVRY LBS / HEAT: 21360.000 LB DLVRY PCS / HEAT: 400 EA

Characteristic	Value
C	0.41%
Mn	1.07%
P	0.011%
S	0.039%
Si	0.25%
Cu	0.33%
Cr	0.15%
Ni	0.12%
Mo	0.045%
V	0.002%
Cb	0.003%
Sn	0.011%
Al	0.002%
Yield Strength test 1	64.6ksi
Tensile Strength test 1	104.8ksi
Elongation test 1	15%
Elongation Gage Lgth test 1	8IN
Bend Test Diameter	5.000IN
Bend Test 1	Passed

Characteristic Value

SS B

Characteristic Value

The Following is true of the material represented by this MTR:

*Material is fully killed
*100% melted and rolled in the USA
*EN10204:2004 3.1 compliant
*Contains no weld repair
*Contains no Mercury contamination
*Manufactured in accordance with the latest version of the plant quality manual
*Meets the "Buy America" requirements of 23 CFR635.410

REMARKS :

Single Slope 46"-46"-6

07/06/2018 16:16:08
Page 1 OF 1

Texas A&M Transportation Institute Proving Ground 3100 SH 47, Bldg 7091 Bryan, TX 77807 Texas A&M University College Station, TX 77843 Phone 979-845-6375	5.7.2 Concrete Sampling	Doc. No. QPF 5.7.2	Revision Date: 2018-04-17
Quality Policy Form	Revised by: B. L. Griffith Approved by: D. Kuhn	Revision: 6	Page: 1 of 1

Project No: 476468-6 **Casting Date:** 2018-08-22 **Mix Design (psi):** 5000psi

Printed Name of Technician taking Sample _____

Printed Name of Technician breaking Sample _____

Signed Name of Technician taking Sample _____

Signed Name of Technician breaking Sample _____

Load No.	Truck No.	Ticket No.	Location (from concrete map)
T1	7130	219874	Base for Single Slope

Load No.	Break Date	Cylinder Age	Total Load (lbs)	Break (psi)	Average

CUSTOMER'S COPY

TICKET NO. 4923850

Martin Marietta

1503 LBJ Freeway
Suite 400
Dallas, Tx 75234

LOAD TIME	TO JOB	ARRIVE JOB SITE	BEGIN POUR	FINISH POUR	LEAVE JOB SITE	ARRIVE PLANT
12:27	12:36	12:55	12:58	:	:	:

WATER ADDED ON JOB AT CUSTOMER'S REQUEST _____ GAL.
ALLOWABLE WATER (withheld from batch) _____ GAL.
TEST CYLINDER TAKEN ❑ YES ❑ NO BY _____
CYLINDER TAKEN ❑ BEFORE ❑ AFTER WATER

ADDITIONAL WATER ADDED TO THIS CONCRETE WILL REDUCE ITS STRENGTH. ANY WATER ADDED IN EXCESS OF SPECIFIED SLUMP IS AT CUSTOMER'S RISK.

CUSTOMER SIGNATURE
X

DELIVERY OF THESE MATERIALS IS SUBJECT TO THE TERMS ANI CONDITIONS ON THE REVERSE SIDE HEREOF AS ACCEPTED B SIGNATURE ABOVE .

CUSTOMER NAME AND DELIVERY ADDRESS
TEXAS A & M UNIVERSI
TTI-Riverside Campus

PLANT	TRUCK	ORDER NO.	SLUMP	P.O. #/JOB/LOT	GRID
617	7130	2032	5.0	469468-11	

DRIVER NAME: DUNNIE BAZY
DATE: 8/22/18

CUSTOMER NUMBER	PROJECT	CUM. QTY	ORDERED QTY
783859	51240	3.00	3.00

LOAD QUANTITY	PRODUCT CODE	DESCRIPTION	UNIT PRICE	AMOUNT
3.00	CYDS	R9Z50547 COM,RG,Z,5000,RE		
1.00	ea	12987 FREIGHT CHARGE		

SPECIAL DELIVERY INSTRUCTIONS
HWY 21-WEST, LEFT INTO RELLIS, THEY WILL MEET YOU THERE

SALES TAX

TOTAL

DANGER! MAY CAUSE ALKALI BURNS.
SEE WARNINGS ON REVERSE SIDE.

FOR OFFICE USE ONLY **FORM:** 2198749

Truck	Driver	User	Disp Ticket Num	Ticket ID	Time	Date
7130	726697	user	4923850	68938	12:27	8/22/18

Load Size	Mix Code	Returned	Qty	Mix Age	Seq	Load ID
3.00	CYDS R9Z50547				D	69906

Material	Design Qty	Required	Batched	% Var	% Moisture	Actual Wat
21	1300 lb	3910 lb	3880 lb	-0.76%	0.25% M	1 gl
23	525 lb	1579 lb	1560 lb	-1.20%	0.25% M	gl
10	1300 lb	4041 lb	4040 lb	* -0.04%	3.30% M	17 gl
1	508 lb	1524 lb	1530 lb	0.39%		
8	127 lb	381 lb	390 lb	2.36%		
902	5 oz	15 oz	15 oz	-1.57%		
P80	20 oz	122 oz	122 oz	0.07%		
H20	256 lb	570 lb	570 lb	-0.05%		68 gl

Actual Num Batches: 1
Load Total: 11979 lb Design 0.403 Water/Cement 0.400 T Design 92.0 gl Actual 86.9 gl To Add: 5.2 gl
Slump: 5.00 in @ Water in Truck: 0.0 gl Adjust Water: 0.0 gl / Load Trim Water: -1.7 gl/ CYD

469468-6

CUSTOMER'S COPY

TICKET NO. 4929600

Martin Marietta

1503 LBJ Freeway
Suite 400
Dallas, Tx 75234

LOAD TIME	TO JOB	ARRIVE JOB SITE	BEGIN POUR	FINISH POUR	LEAVE JOB SITE	ARRIVE PLANT
:48	:	:	:	:	:	:

WATER ADDED ON JOB AT CUSTOMER'S REQUEST _____ GAL.
ALLOWABLE WATER (withheld from batch) _____ GAL.
TEST CYLINDER TAKEN ❑ YES ❑ NO BY _____
CYLINDER TAKEN ❑ BEFORE ❑ AFTER WATER

ADDITIONAL WATER ADDED TO THIS CONCRETE WILL REDUCE ITS STRENGTH. ANY WATER ADDED IN EXCESS OF SPECIFIED SLUMP IS AT CUSTOMER'S RISK.

CUSTOMER SIGNATURE
X

DELIVERY OF THESE MATERIALS IS SUBJECT TO THE TERMS AN CONDITIONS ON THE REVERSE SIDE HEREOF AS ACCEPTED B SIGNATURE ABOVE .

CUSTOMER NAME AND DELIVERY ADDRESS
TEXAS A & M UNIVERSI
TTI-Riverside Campus

PLANT	TRUCK	ORDER NO.	SLUMP	P.O. #/JOB/LOT	GRID
617	6128	2019	7.0	469468-6	

DRIVER NAME: Jessie Quintero
DATE: 8/24/18

CUSTOMER NUMBER	PROJECT	CUM. QTY	ORDERED QTY
783659	51240	4.00	4.00

LOAD QUANTITY	PRODUCT CODE	DESCRIPTION	UNIT PRICE	AMOUNT
4.00	CYDS	DBHE00 DOT,6000,REG,6.5		
1.00	ea	12987 FREIGHT CHARGE		

SPECIAL DELIVERY INSTRUCTIONS
21 W, LEFT INTO RELLIS, CUSTOMERTO MEET YOU AT ENTRANCE

SALES TAX
TOTAL

DANGER! MAY CAUSE ALKALI BURNS.
SEE WARNINGS ON REVERSE SIDE.

FOR OFFICE USE ONLY **FORM:** 2198842

Truck	Driver	User	Disp Ticket Num	Ticket ID	Time	Date
6128	938114	user	4929600	69031	7:48	8/24/18

Load Size	Mix Code	Returned	Qty	Mix Age	Seq	Load ID
4.00	CYDS DBHE00				D	70001

Material	Design Qty	Required	Batched		% Var	% Moisture	Actual Wat
157	1975 lb	7932 lb	7960 lb	*	0.36%	0.40% M	4 gl
10	1156 lb	4817 lb	4840 lb	*	0.48%	4.00% M	23 gl
1	775 lb	3100 lb	3080 lb		-0.65%		
GL7920	39 oz	155 oz	156 oz		0.65%		
900	4 oz	28 oz	28 oz		0.00%		
P80	39 oz	310 oz	310 oz		0.00%		
H20	233 lb	651 lb	657 lb		0.94%		
Actual	Num Batches: 1						79 gl

469468-6
SGCB

Load Total: 16568 lb Design 0.301 Water/Cement 0.303 T Design 111.7 gl Actual 105.7 gl To Add: 5.9 gl
Slump: 7.00 in Water in Truck: 0.0 gl Adjust Water: 0.0 gl / Load Trim Water: -1.7 gl/ CYD

F.3 VEHICLE PROPERTIES AND INFORMATION

Table F.1. Vehicle Properties for Test No. 469468-6-1.

Date:	2018-08-28	Test No.:	469468-6	VIN No.:	3HAMMAAN3DL237432
Year:	2013	Make:	INTERNATIONAL	Model:	4300
Odometer:	94535	Tire Size Front:	275/80R22.5	Tire Size Rear:	275/80R22.5

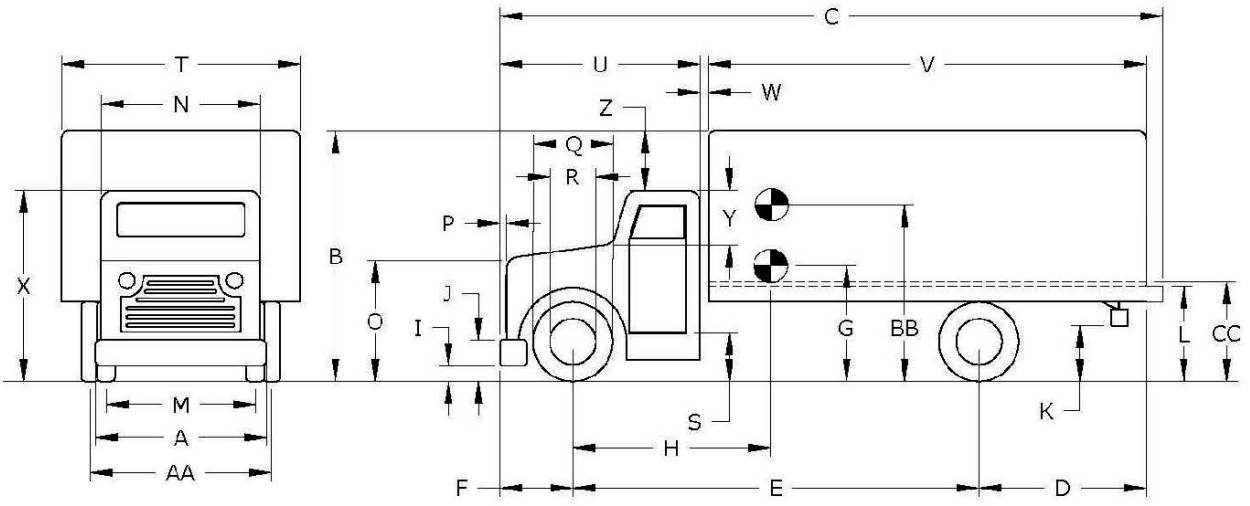

Vehicle Geometry: ☑ inches or ☐ mm

A	Front Bumper Width:	95.00	K	Rear Bumper Bottom:		U	Cab Length:	106.00
B	Overall Height:	147	L	Rear Frame Top:	37.00	V	Trailer/Box Length:	221.00
C	Overall Length:	324.75	M	Front Track Width:	80.00	W	Gap Width:	4.00
D	Rear Overhang:	84.00	N	Roof Width:	71.00	X	Overall Front Height:	98.50
E	Wheel Base:	204.75	O	Hood Height:	59.00	Y	Roof-Hood Distance:	30.00
F	Front Overhang:	36.00	P	Bumper Extension:	1.00	Z	Roof-Box Height Difference:	50.00
G	C.G. Height:		Q	Front Tire Width:	39.00	AA	Rear Track Width:	73.00
H	C.G. Horizontal Dist. w/Ballast:	126.55	R	Front Wheel Width:	23.50	BB	Ballast Center of Mass:	63.25
I	Front Bumper Bottom:	16.25	S	Bottom Door Height:	37.00	CC	Cargo Bed Height:	50.00
J	Front Bumper Top:	33.25	T	Overall Width:	96.00			

Allowable Range: C = 394 inches max.; E = 240 inches max.; CC = 51 ±2 inches; BB = 63 ±2 inches above ground;

Wheel Center Height Front	19.00	Wheel Well Clearance (Front)	9.00	Bottom Frame Height (Front)	25.50
Wheel Center Height Rear	19.00	Wheel Well Clearance (Rear)	4.50	Bottom Frame Height (Rear)	27.00

Table F.1. Vehicle Properties for Test No. 469468-6-1 (Continued).

Date: 2018-08-28 Test No.: 469468-6 VIN No.: 3HAMMAAN3DL237432

Year: 2013 Make: INTERNATIONAL Model: 4300

WEIGHTS (☑ lb or ☐ kg)	CURB	TEST INERTIAL
$W_{front\ axle}$	7140	8440
$W_{rear\ axle}$	6840	13660
W_{TOTAL}	13980	22100

Allowable Range for CURB = 13,200 ±2200 lb | Allowable Range for TIM = 22,046 ±660 lb

Ballast: 8000 (☑ lb or ☐ kg) (as-needed)
(See *MASH* Section 4.2.1.2 for recommended ballasting)

Mass Distribution (☑ lb or ☐ kg): **LF:** 4320 **RF:** 4120 **LR:** 6730 **RR:** 6930

Engine Type: VT

Engine Size: 365

Transmission Type:

☑ Auto or ☐ Manual

☐ FWD ☑ RWD ☐ 4WD

Accelerometer Locations (☑ inches or ☐ mm)

	x[1]	y	z[2]
Front:			
Center:	126.50	0.00	50.00
Rear:	204.75	0.00	50.00

Describe any damage to the vehicle prior to test: NONE

Other notes to include ballast type, dimensions, mass, location, center of mass, and method of attachment:

2 BLOCKS H 30" W 60" L30"
CENTERED IN MIDDLE OF BED
63.25" FROM CENTER OF BLOCK TO GROUND
4 5/16" TIE DOWN CABLES PER BLOCK

Performed by: SCD **Date:** 2018-08-28

[1] Referenced to the front axle
[2] Above ground

F.4 SEQUENTIAL PHOTOGRAPHS

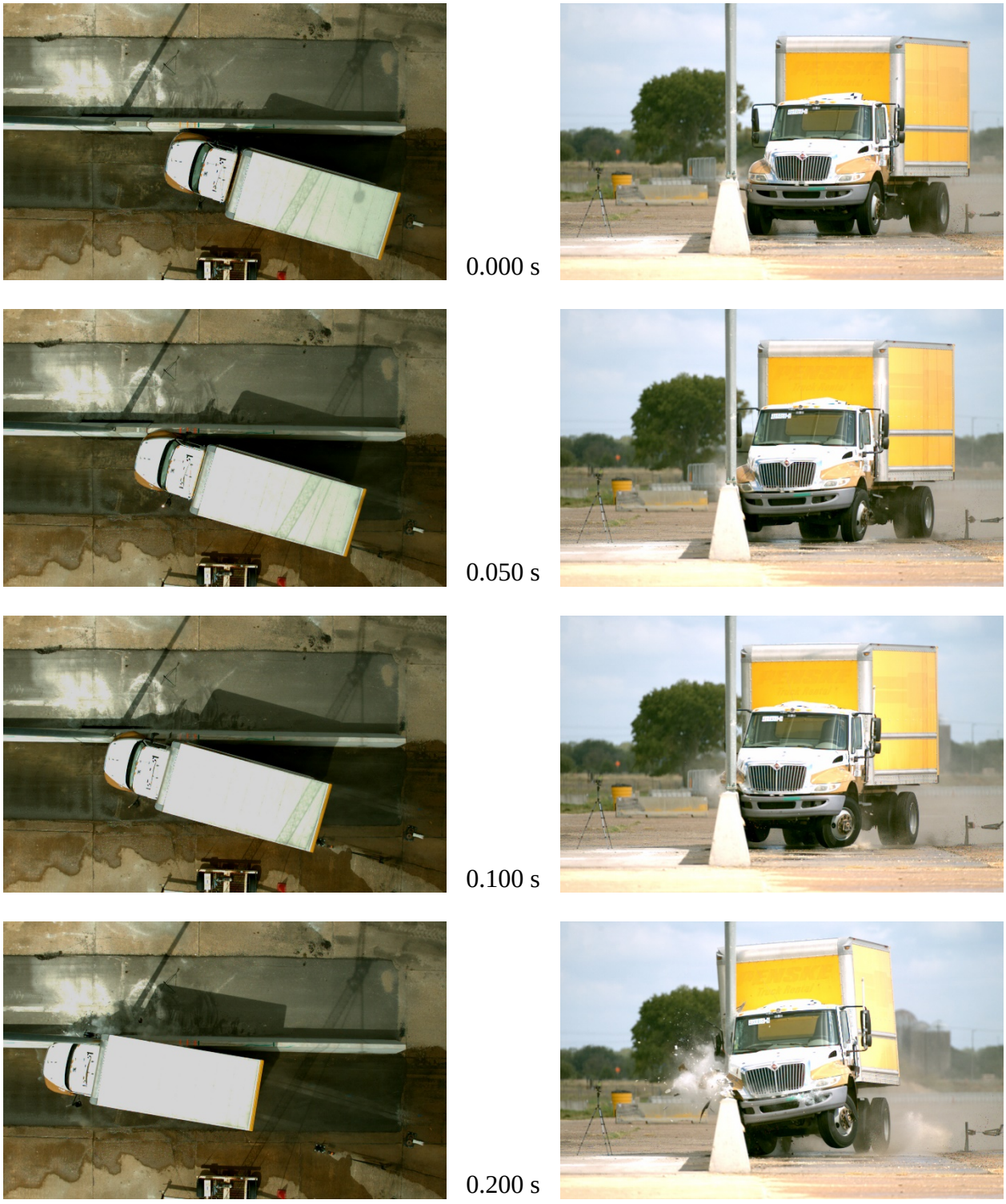

Figure F.1. Sequential Photographs for Test No. 469468-6-1 (Overhead and Gut Views).





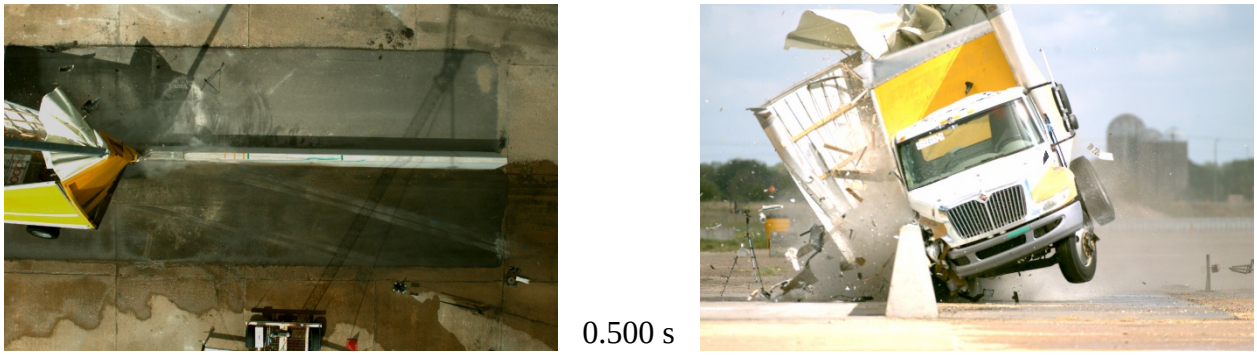

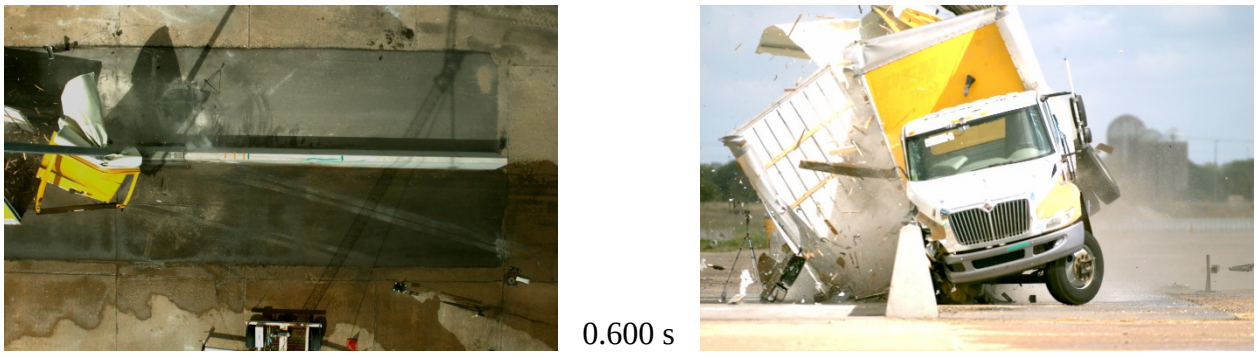

Figure F.1. Sequential Photographs for Test No. 469468-6-1 (Overhead and Gut Views) (Continued).

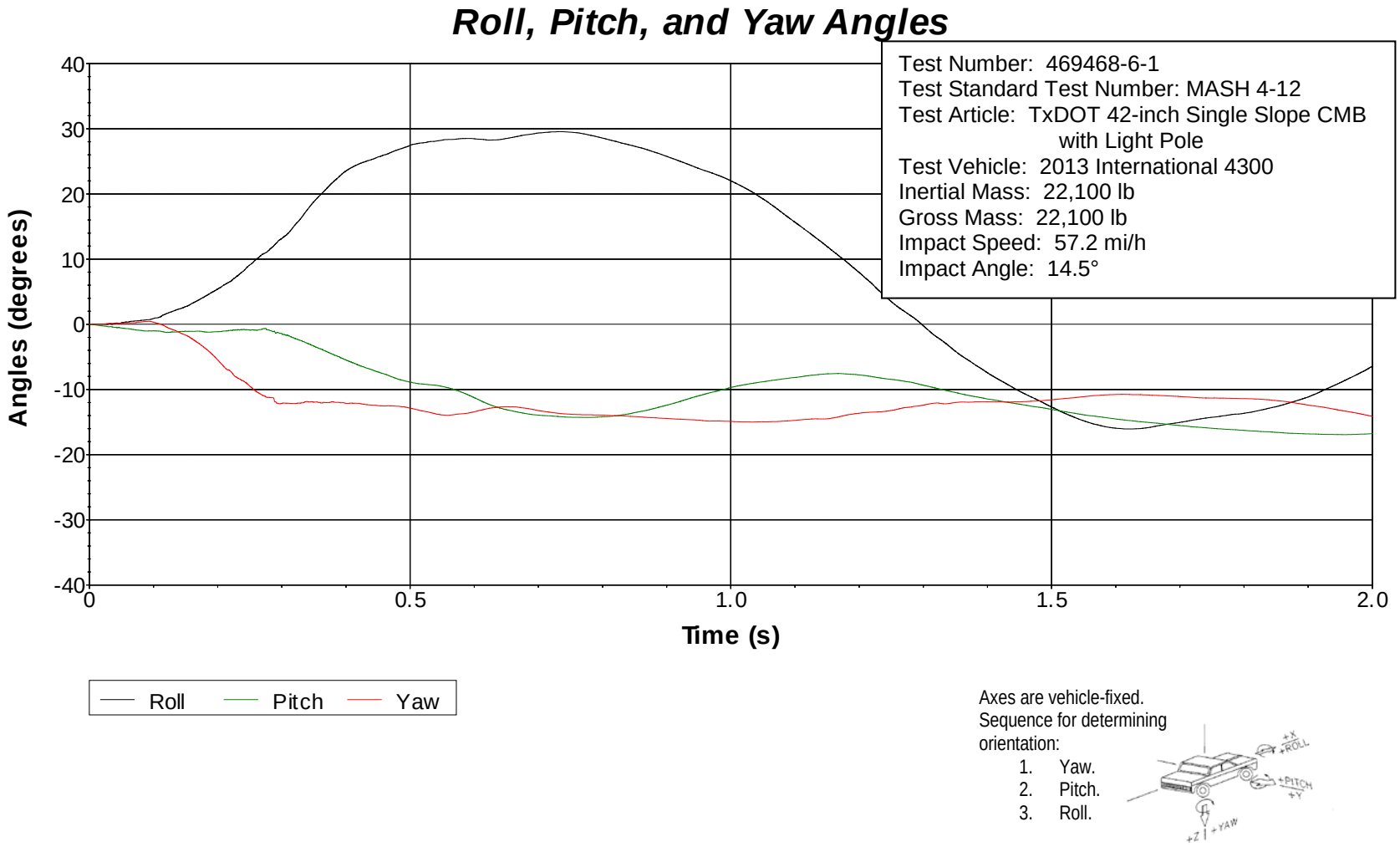

Figure F.2. Vehicle Angular Displacements for Test No. 469468-6-1.

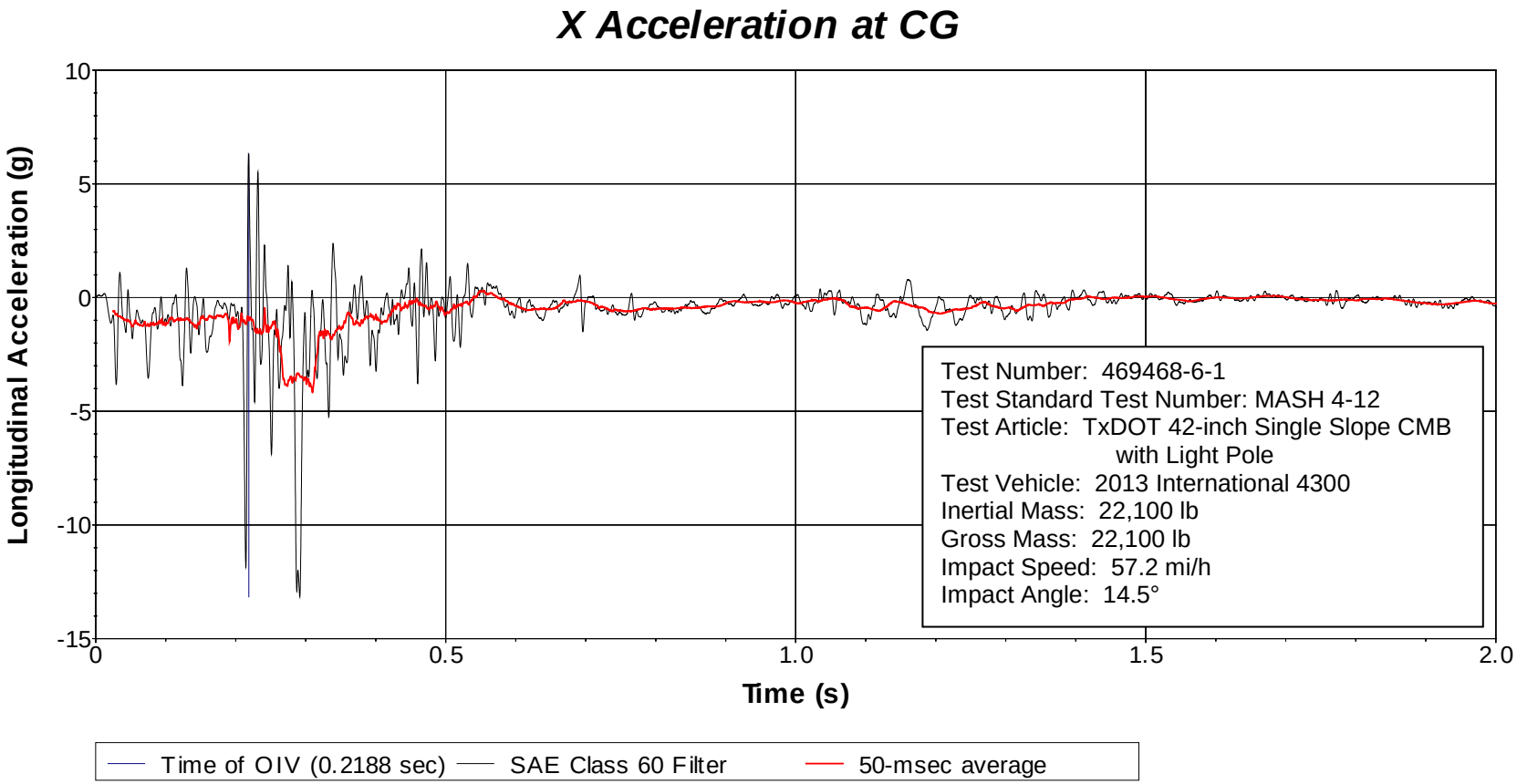

Figure F.3. Vehicle Longitudinal Accelerometer Trace for Test No. 469468-6-1 (Accelerometer Located at Center of Gravity).

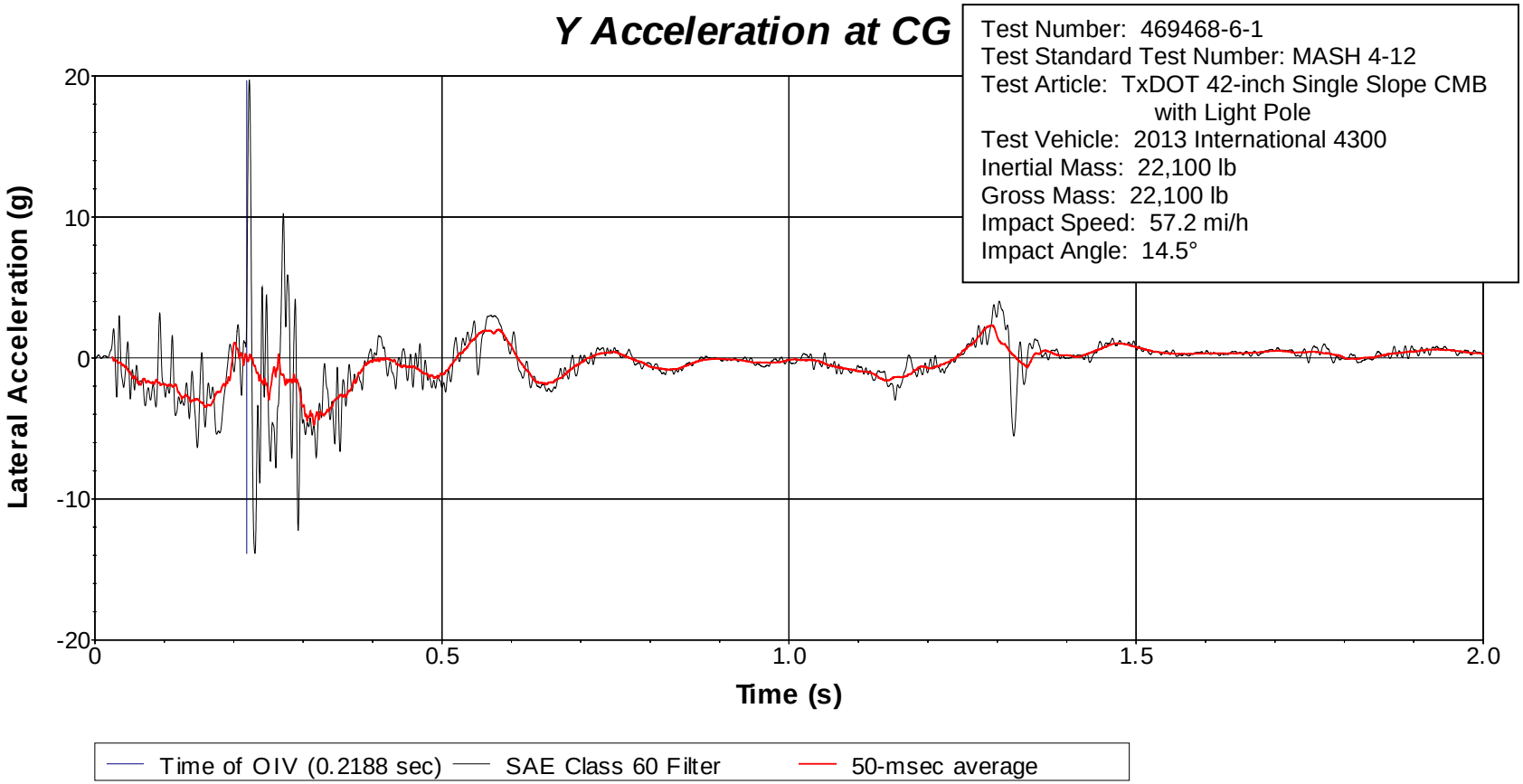

Figure F.4. Vehicle Lateral Accelerometer Trace for Test No. 469468-6-1 (Accelerometer Located at Center of Gravity).

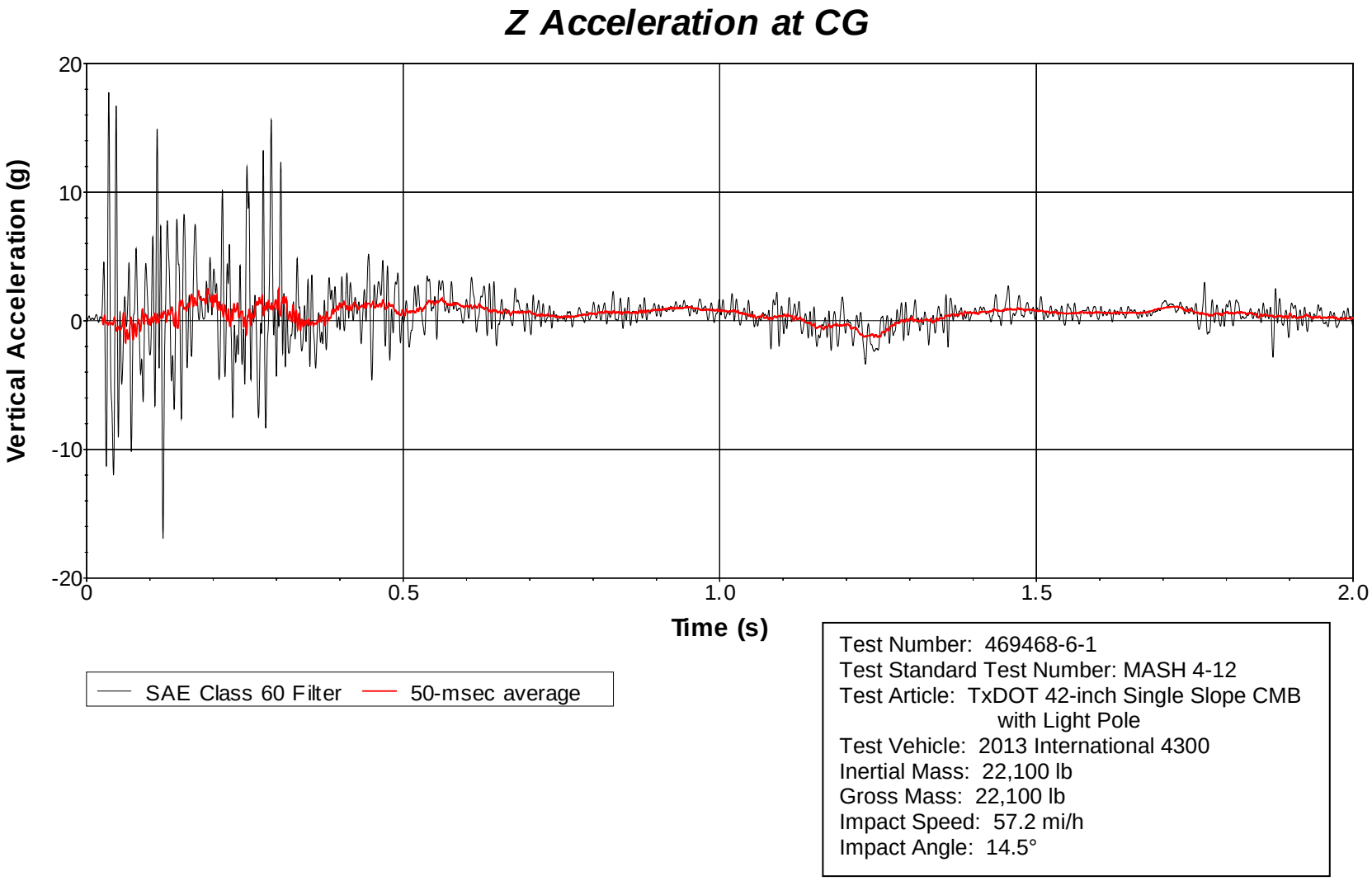

Figure F.5. Vehicle Vertical Accelerometer Trace for Test No. 469468-6-1 (Accelerometer Located at Center of Gravity).

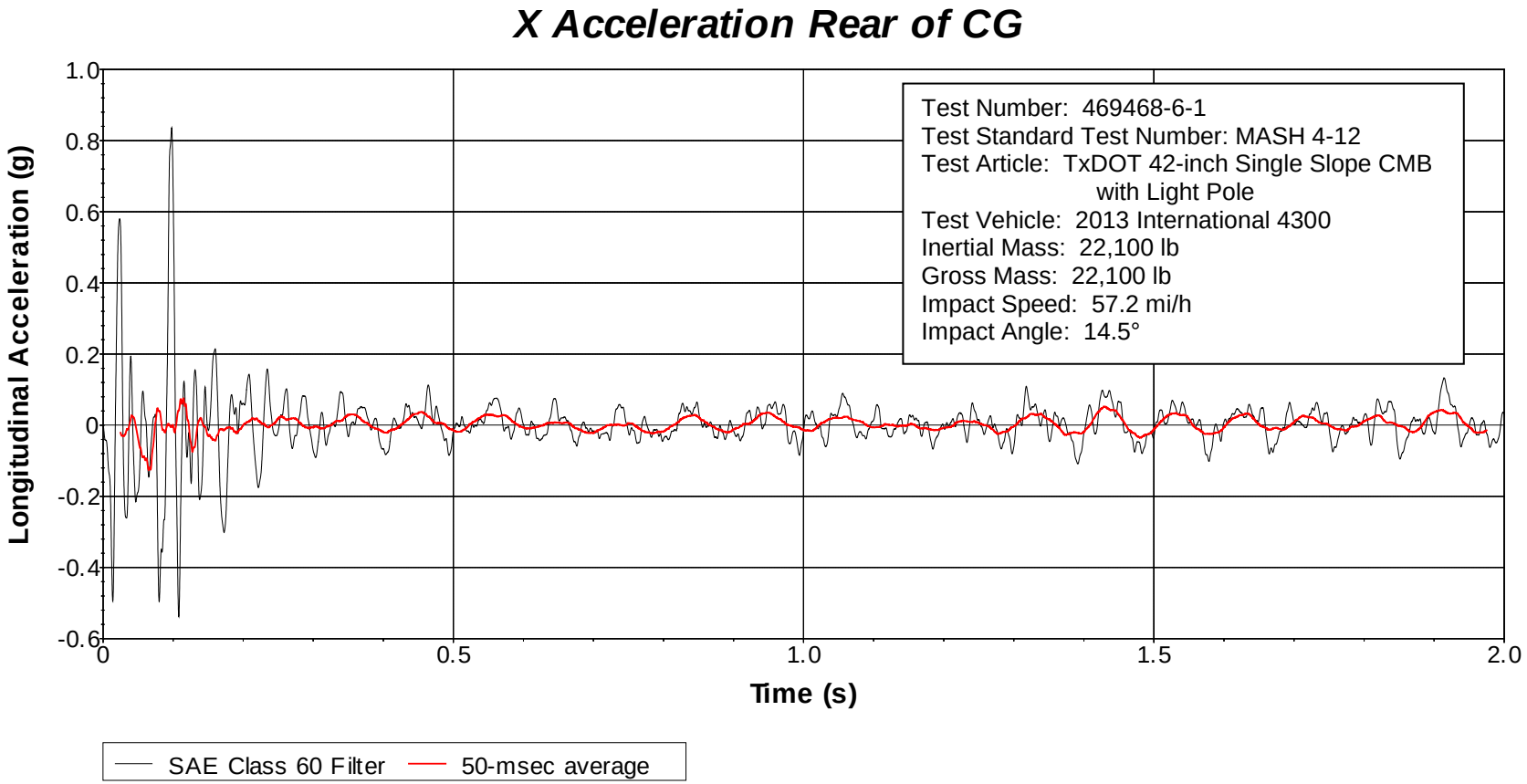

Figure F.6. Vehicle Longitudinal Accelerometer Trace for Test No. 469468-6-1 (Accelerometer Located at Rear of Center of Gravity).

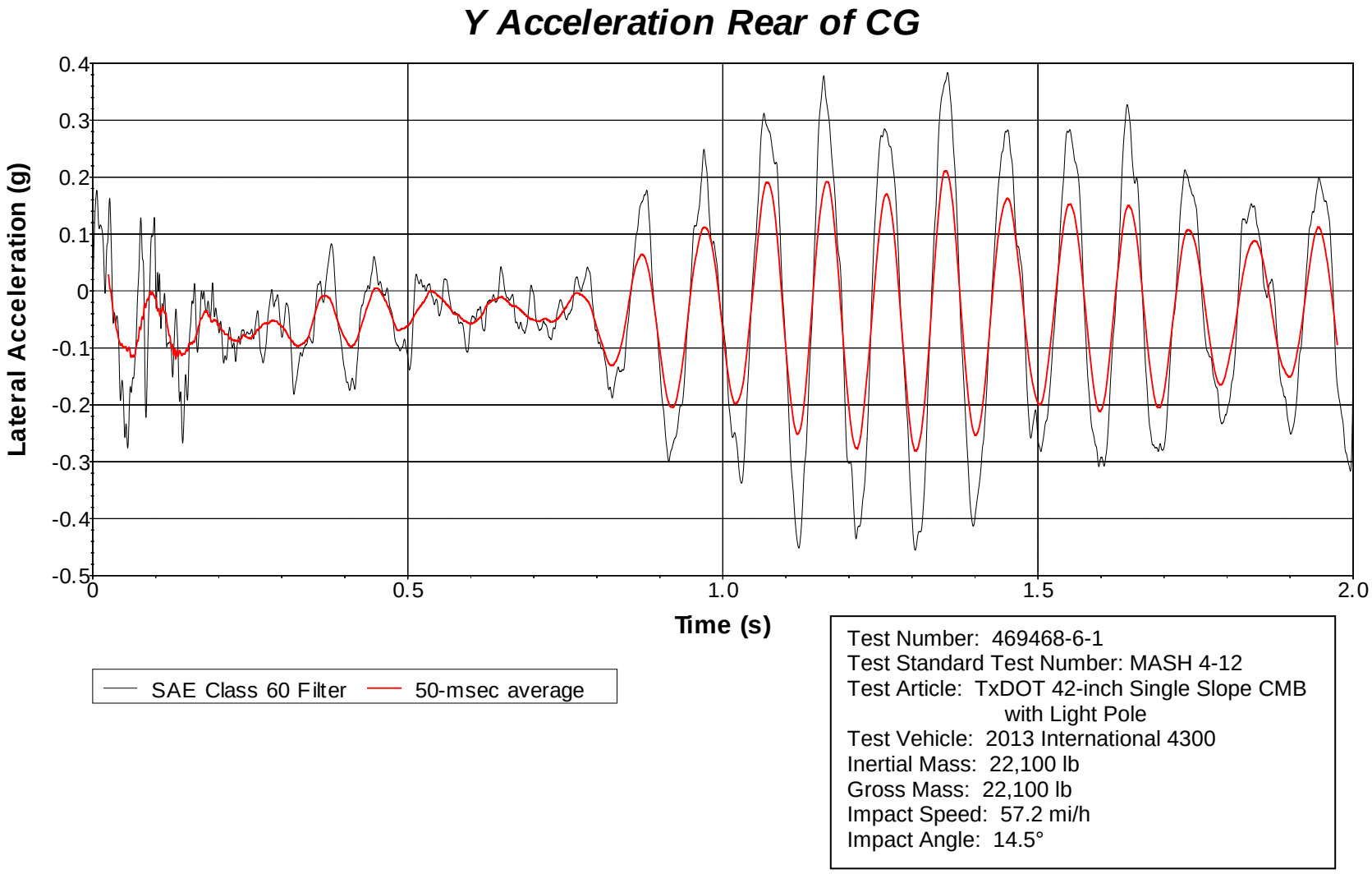

Figure F.7. Vehicle Lateral Accelerometer Trace for Test No. 469468-6-1 (Accelerometer Located Rear of Center of Gravity)

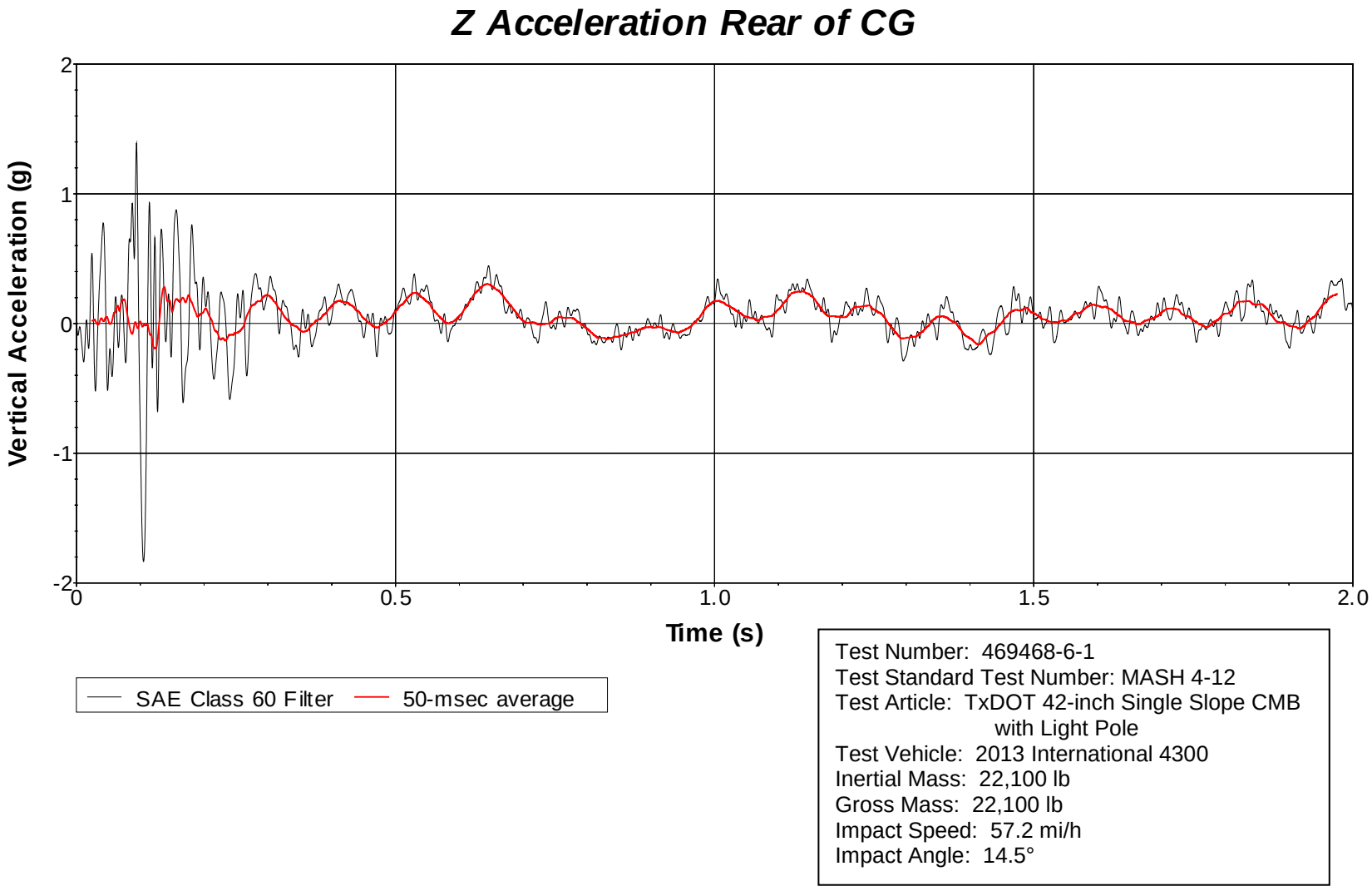

Figure F.8. Vehicle Vertical Accelerometer Trace for Test No. 469468-6-1 (Accelerometer Located Rear of Center of Gravity).

APPENDIX G. SKID-MOUNTED SINGLE PERFORATED STEEL TUBE SIGN SUPPORT SYSTEM

G.1 *MASH* TEST 3-72 AT 0° (CRASH TEST NO. 469468-7-1)

G.1.1 Vehicle Properties and Information

Table D.1. Vehicle Properties for Test No. 469468-7-1.

Date: 2018-2-19 Test No.: 469468-7-1 VIN No.: 1C6RD6FT0CS159827

Year: 2012 Make: DODGE Model: RAM 1500

Tire Size: 265/70 R 17 Tire Inflation Pressure: 35 PSI

Tread Type: HIGHWAY Odometer: 149523

Note any damage to the vehicle prior to test: NONE

● Denotes accelerometer location.

NOTES:

Engine Type: V-8
Engine CID: 4.7 L

Transmission Type:
☑ Auto or ☐ Manual
☐ FWD ☑ RWD ☐ 4WD

Optional Equipment:
NONE

Dummy Data:
Type: NONE
Mass:
Seat Position:

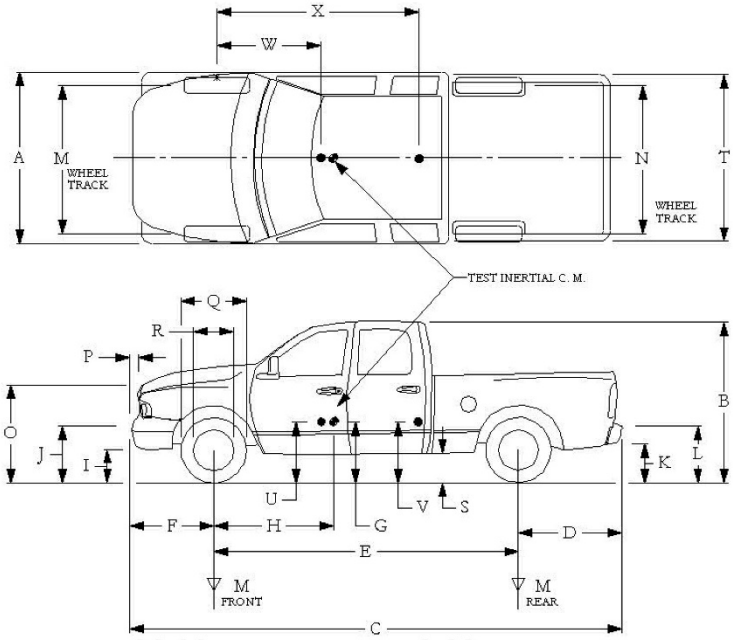

Geometry: inches

A	78.50	F	40.00	K	20.00	P	3.00	U	
B	74.00	G	28.50	L	30.00	Q	30.50	V	
C	227.50	H	62.10	M	68.50	R	18.00	W	
D	44.00	I	9.50	N	68.00	S	13.00	X	
E	140.50	J	27.00	O	46.00	T	77.00		

Wheel Center Height Front	14.75	Wheel Well Clearance (Front)	6.00	Bottom Frame Height - Front	12.00
Wheel Center Height Rear	14.75	Wheel Well Clearance (Rear)	9.25	Bottom Frame Height - Rear	25.50

RANGE LIMIT: A=78 ±2 inches; C=237 ±13 inches; E=148 ±12 inches; F=39 ±3 inches; G = > 28 inches; H = 63 ±4 inches; O=43 ±4 inches; M+N/2=67 ±1.5 inches

GVWR Ratings:		**Mass:** lb	Curb	Test Inertial	Gross Static
Front	3700	M_{front}	2870	2808	
Back	3900	M_{rear}	2000	2226	
Total	6700	M_{Total}	4870	5034	

(Allowable Range for TIM and GSM = 5000 lb ±110 lb)

Mass Distribution:
lb LF: 1403 RF: 1405 LR: 1129 RR: 1097

Table G.2. Measurements of Vehicle Vertical CG for Test No. 469468-7-1.

Date: 2018-2-19 Test No.: 469468-7-1 VIN: 1C6RD6FT0CS159827

Year: 2012 Make: DODGE Model: RAM 1500

Body Style: QUAD CAB Mileage: 149523

Engine: 4.7L V-8 Transmission: AUTO

Fuel Level: EMPTY Ballast: 120 LBS (440 lb max)

Tire Pressure: Front: 35 psi Rear: 35 psi Size: 265/70 R 17

Measured Vehicle Weights: (lb)								
LF:	1403	RF:	1405	Front Axle:	2808			
LR:	1129	RR:	1097	Rear Axle:	2226			
Left:	2532	Right:	2502	Total:	5034			
				5000 ±110 lb allowed				
Wheel Base:	140.50 inches			Track: F:	68.50 inches	R:	68.00 inches	
148 ±12 inches allowed				Track = (F+R)/2 = 67 ±1.5 inches allowed				
Center of Gravity, SAE J874 Suspension Method								
X:	62.13 inches	Rear of Front Axle		(63 ±4 inches allowed)				
Y:	-0.20 inches	Left -	Right +	of Vehicle Centerline				
Z:	28.50 inches	Above Ground		(minumum 28.0 inches allowed)				

Hood Height: 46.00 inches
43 ±4 inches allowed

Front Bumper Height: 27.00 inches

Front Overhang: 40.00 inches
39 ±3 inches allowed

Rear Bumper Height: 30.00 inches

Overall Length: 227.50 inches
237 ±13 inches allowed

Table G.3. Exterior Crush Measurements of Vehicle for Test No. 469468-7-1.

Date: 2018-2-19 Test No.: 469468-7-1 VIN No.: 1C6RD6FT0CS159827

Year: 2012 Make: DODGE Model: RAM 1500

VEHICLE CRUSH MEASUREMENT SHEET[1]

Complete When Applicable	
End Damage	Side Damage
Undeformed end width _____	Bowing: B1 _____ X1 _____
Corner shift: A1 _____	B2 _____ X2 _____
A2 _____	
End shift at frame (CDC)	Bowing constant
(check one)	$\frac{X1+X2}{2}$ = _____
< 4 inches _____	
≥ 4 inches _____	

Note: Measure C_1 to C_6 from Driver to Passenger Side in Front or Rear impacts – Rear to Front in Side Impacts.

Specific Impact Number	Plane* of C-Measurements	Direct Damage		Field L**	C_1	C_2	C_3	C_4	C_5	C_6	±D
		Width** (CDC)	Max*** Crush								
	None Measureable										
	inches										

[1]Table taken from National Accident Sampling System (NASS).

*Identify the plane at which the C-measurements are taken (e.g., at bumper, above bumper, at sill, above sill, at beltline, etc.) or label adjustments (e.g., free space).

Free space value is defined as the distance between the baseline and the original body contour taken at the individual C locations. This may include the following: bumper lead, bumper taper, side protrusion, side taper, etc. Record the value for each C-measurement and maximum crush.

**Measure and document on the vehicle diagram the beginning or end of the direct damage width and field L (e.g., side damage with respect to undamaged axle).

***Measure and document on the vehicle diagram the location of the maximum crush.

Note: Use as many lines/columns as necessary to describe each damage profile.

Table G.4. Occupant Compartment Measurements of Vehicle for Test No. 469468-7-1.

Date:	2018-2-19	Test No.:	469468-7-1	VIN No.:	1C6RD6FT0CS159827
Year:	2012	Make:	DODGE	Model:	RAM 1500

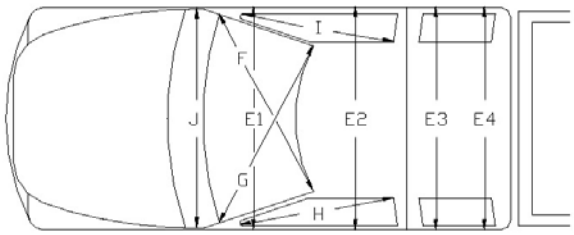

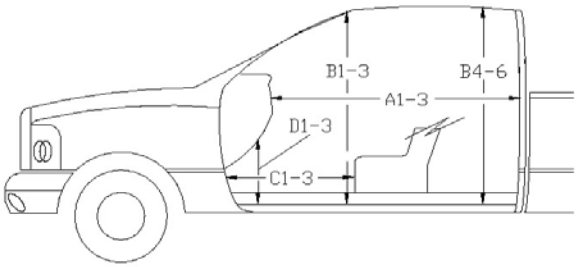

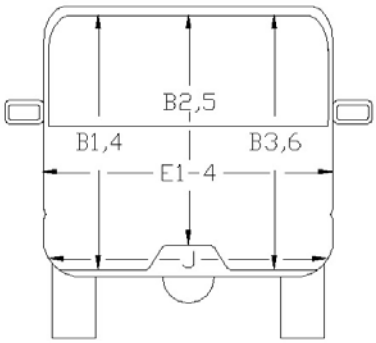

*Lateral area across the cab from driver's side kickpanel to passenger's side kickpanel.

OCCUPANT COMPARTMENT DEFORMATION MEASUREMENT

	Before	After	Differ.
		inches	
A1	65.00	65.00	0.00
A2	63.00	63.00	0.00
A3	65.50	65.50	0.00
B1	45.00	45.00	0.00
B2	38.00	38.00	0.00
B3	45.00	45.00	0.00
B4	39.50	39.50	0.00
B5	43.00	43.00	0.00
B6	39.50	39.50	0.00
C1	6.00	6.00	0.00
C2	0.00	0.00	0.00
C3	26.00	26.00	0.00
D1	11.00	11.00	0.00
D2	0.00	0.00	0.00
D3	11.50	11.50	0.00
E1	58.50	58.50	0.00
E2	63.50	63.50	0.00
E3	63.50	63.50	0.00
E4	63.50	63.50	0.00
F	59.00	59.00	0.00
G	59.00	59.00	0.00
H	37.50	37.50	0.00
I	37.50	37.50	0.00
J*	25.00	25.00	0.00

G.1.2 Sequential Photographs

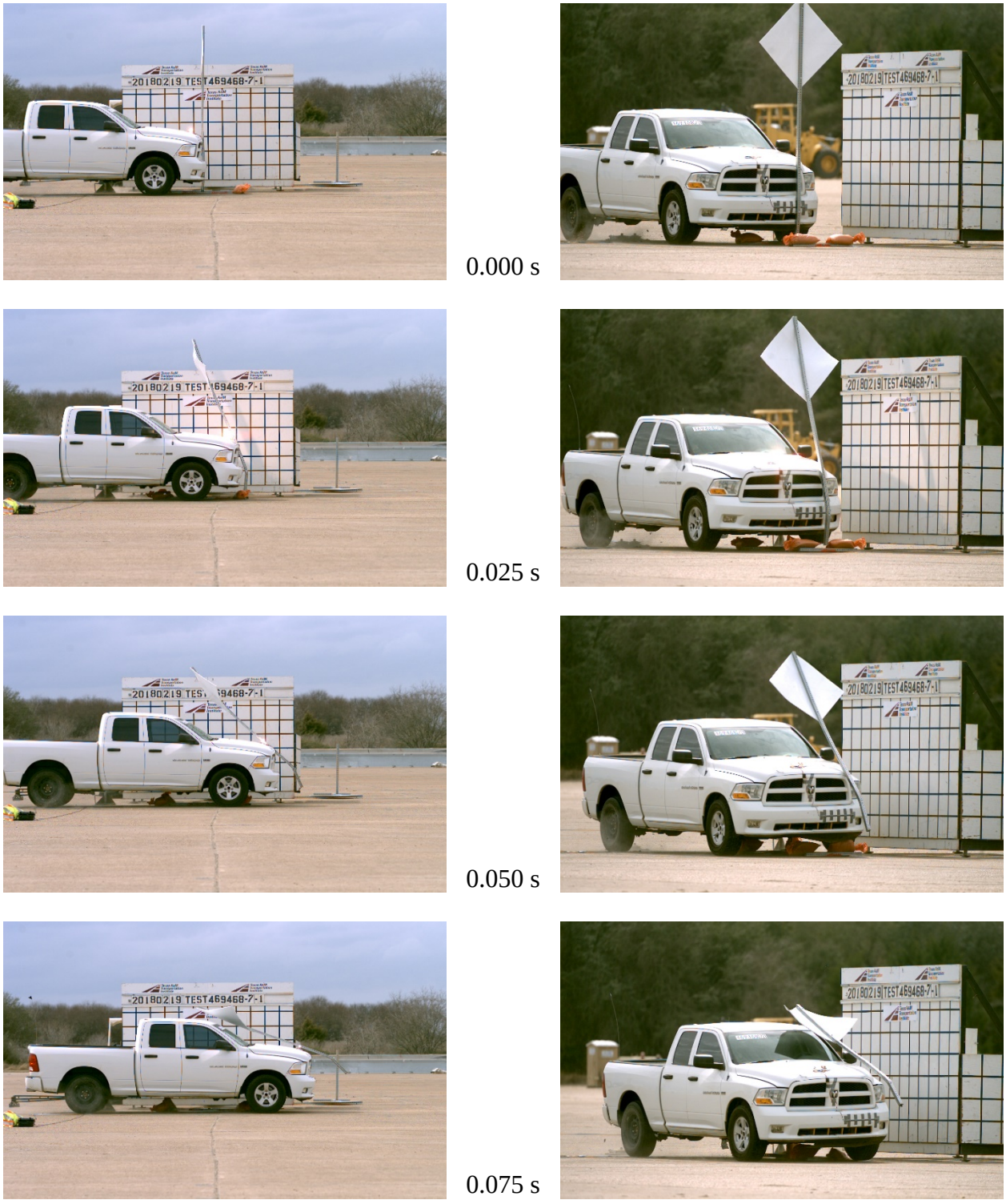

Figure G.1. Sequential Photographs for Test No. 469468-7-1 (Perpendicular and Oblique Views).



Figure G.1. Sequential Photographs for Test No. 469468-7-1 (Perpendicular and Oblique Views) (Continued).

G2. *MASH* TEST 3-72 AT 90° (CRASH TEST NO. 469468-7-2)

G.2.1 Vehicle Properties and Information

Table G.5. Vehicle Properties for Test No. 469468-7-2.

Date: 2018-2-19 Test No.: 469468-7-2 VIN No.: 1C6RR6FTXDS500539

Year: 2013 Make: DODGE Model: RAM 1500

Tire Size: 265/70 R 17 Tire Inflation Pressure: 35 PSI

Tread Type: HIGHWAY Odometer: 192658

Note any damage to the vehicle prior to test: NONE

● Denotes accelerometer location.

NOTES:

Engine Type: V-8
Engine CID: 4.7 L

Transmission Type:
☑ Auto or ☐ Manual
☐ FWD ☑ RWD ☐ 4WD

Optional Equipment:
NONE

Dummy Data:
Type: NONE
Mass:
Seat Position:

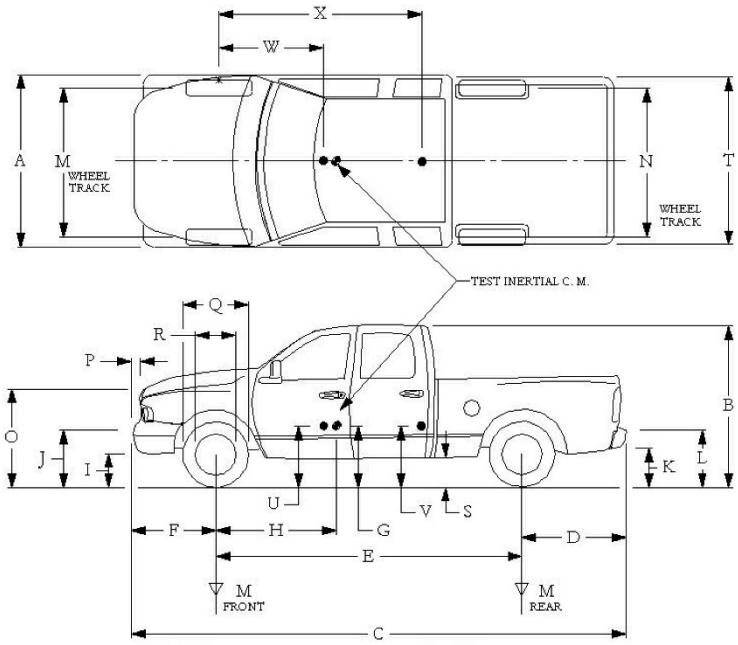

Geometry: inches

A	78.50	F	40.00	K	20.00	P	3.00	U	
B	74.00	G	28.50	L	30.00	Q	30.50	V	
C	227.50	H	60.76	M	68.50	R	18.00	W	
D	44.00	I	12.00	N	68.00	S	13.00	X	
E	140.50	J	26.50	O	46.00	T	77.00		

Wheel Center Height Front	14.75	Wheel Well Clearance (Front)	6.00	Bottom Frame Height - Front	12.00
Wheel Center Height Rear	14.75	Wheel Well Clearance (Rear)	9.25	Bottom Frame Height - Rear	25.50

RANGE LIMIT: A=78 ±2 inches; C=237 ±13 inches; E=148 ±12 inches; F=39 ±3 inches; G = > 28 inches; H = 63 ±4 inches; O=43 ±4 inches; M+N/2=67 ±1.5 inches

GVWR Ratings:		**Mass:** lb	Curb	Test Inertial	Gross Static
Front	3700	M_{front}	2934	2854	
Back	3900	M_{rear}	2092	2175	
Total	6700	M_{Total}	5026	5029	

(Allowable Range for TIM and GSM = 5000 lb ±110 lb)

Mass Distribution:
lb LF: 1425 RF: 1429 LR: 1083 RR: 1092

Table G.6. Measurements of Vehicle Vertical CG for Test No. 469468-7-2.

Date: 2018-2-19 Test No.: 469468-7-2 VIN: 1C6RR6FTXDS500539

Year: 2013 Make: DODGE Model: RAM 1500

Body Style: QUAD CAB Mileage: 192658

Engine: 4.7L V-8 Transmission: AUTO

Fuel Level: EMPTY Ballast: (440 lb max)

Tire Pressure: Front: 35 psi Rear: 35 psi Size: 265/70 R 17

Measured Vehicle Weights: (lb)									
LF:	1425	RF:	1429	Front Axle:	2854				
LR:	1083	RR:	1092	Rear Axle:	2175				
Left:	2508	Right:	2521	Total:	5029				
				5000 ±110 lb allowed					
Wheel Base:	140.50 inches			Track: F:	68.50 inches	R:	68.00 inches		
148 ±12 inches allowed				Track = (F+R)/2 = 67 ±1.5 inches allowed					
Center of Gravity, SAE J874 Suspension Method									
X:	60.77 inches	Rear of Front Axle		(63 ±4 inches allowed)					
Y:	0.09 inches	Left -	Right +	of Vehicle Centerline					
Z:	28.50 inches	Above Ground		(minumum 28.0 inches allowed)					

Hood Height: 46.00 inches
43 ±4 inches allowed

Front Bumper Height: 26.50 inches

Front Overhang: 40.00 inches
39 ±3 inches allowed

Rear Bumper Height: 30.00 inches

Overall Length: 227.50 inches
237 ±13 inches allowed

Table G.7. Exterior Crush Measurements of Vehicle for Test No. 469468-7-2.

Date: 2018-2-19 Test No.: 469468-7-2 VIN No.: 1C6RR6FTXDS500539

Year: 2013 Make: DODGE Model: RAM 1500

VEHICLE CRUSH MEASUREMENT SHEET[1]

Complete When Applicable	
End Damage	Side Damage
Undeformed end width _____	Bowing: B1 _____ X1 _____
Corner shift: A1 _____	B2 _____ X2 _____
A2 _____	
End shift at frame (CDC)	Bowing constant
(check one)	$\frac{X1+X2}{2}$ = _____
< 4 inches _____	
≥ 4 inches _____	

Note: Measure C_1 to C_6 from Driver to Passenger Side in Front or Rear impacts – Rear to Front in Side Impacts.

Specific Impact Number	Plane* of C-Measurements	Direct Damage		Field L**	C_1	C_2	C_3	C_4	C_5	C_6	±D
		Width** (CDC)	Max*** Crush								
	None Measurable										
	inches										

[1]Table taken from National Accident Sampling System (NASS).

*Identify the plane at which the C-measurements are taken (e.g., at bumper, above bumper, at sill, above sill, at beltline, etc.) or label adjustments (e.g., free space).

Free space value is defined as the distance between the baseline and the original body contour taken at the individual C locations. This may include the following: bumper lead, bumper taper, side protrusion, side taper, etc. Record the value for each C-measurement and maximum crush.

**Measure and document on the vehicle diagram the beginning or end of the direct damage width and field L (e.g., side damage with respect to undamaged axle).

***Measure and document on the vehicle diagram the location of the maximum crush.

Note: Use as many lines/columns as necessary to describe each damage profile.

Table G.8. Occupant Compartment Measurements of Vehicle for Test No. 469468-7-2.

Date:	2018-2-19	Test No.:	469468-7-2	VIN No.:	1C6RR6FTXDS500539
Year:	2013	Make:	DODGE	Model:	RAM 1500

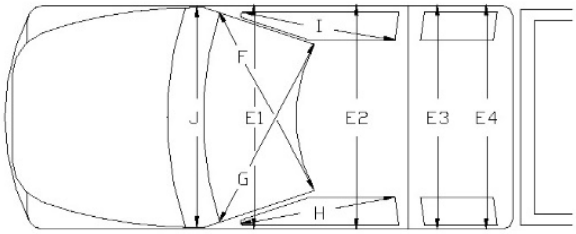

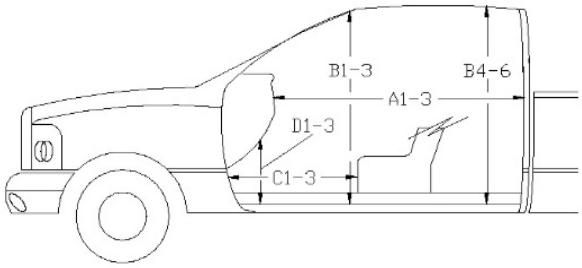

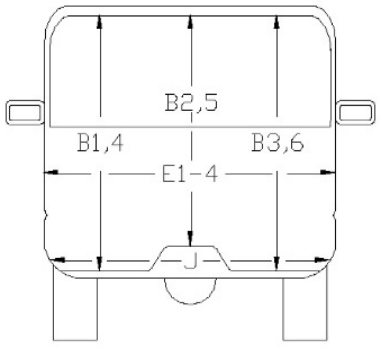

*Lateral area across the cab from driver's side kickpanel to passenger's side kickpanel.

OCCUPANT COMPARTMENT DEFORMATION MEASUREMENT

	Before	After	Differ.
	inches		
A1	65.00	65.00	0.00
A2	63.00	63.00	0.00
A3	65.50	65.50	0.00
B1	45.00	45.00	0.00
B2	38.00	38.00	0.00
B3	45.00	45.00	0.00
B4	39.50	39.50	0.00
B5	43.00	43.00	0.00
B6	39.50	39.50	0.00
C1	6.00	6.00	0.00
C2	0.00	0.00	0.00
C3	26.00	26.00	0.00
D1	11.00	11.00	0.00
D2	0.00	0.00	0.00
D3	11.50	11.50	0.00
E1	58.50	58.50	0.00
E2	63.50	63.50	0.00
E3	63.50	63.50	0.00
E4	63.50	63.50	0.00
F	59.00	59.00	0.00
G	59.00	59.00	0.00
H	37.50	37.50	0.00
I	37.50	37.50	0.00
J*	25.00	25.00	0.00

G.2.2 Sequential Photographs

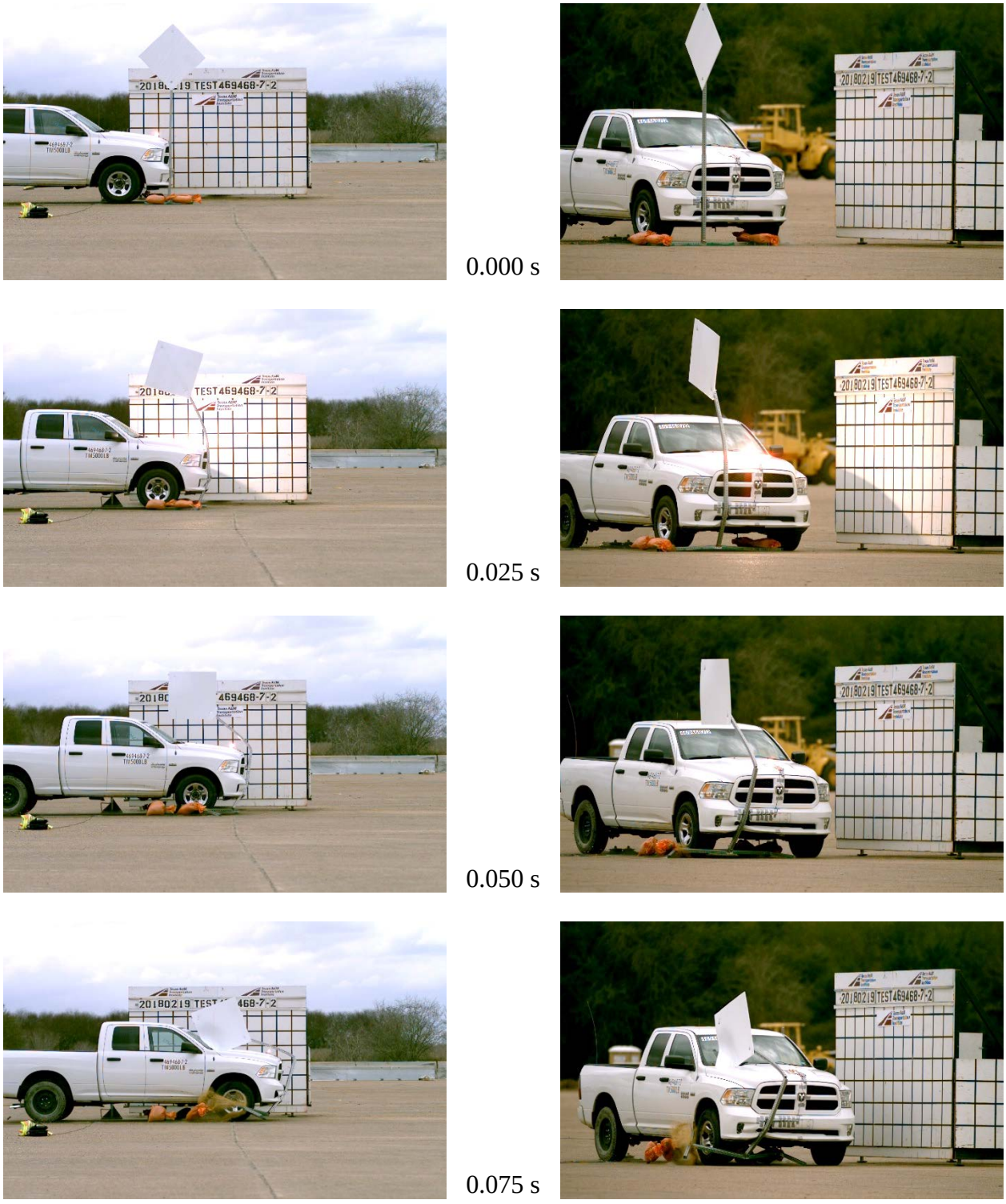

Figure G.2. Sequential Photographs for Test No. 469468-7-2 (Perpendicular and Oblique Views).









Figure G.2. Sequential Photographs for Test No. 469468-7-2 (Perpendicular and Oblique Views) (Continued).

APPENDIX H. MAILBOXES

H.1 *MASH* TEST 3-61 ON SINGLE MAILBOX WITH RECYCLED RUBBER SUPPORT IN TYPE 4 FOUNDATION

H.1.1 Test Article Details

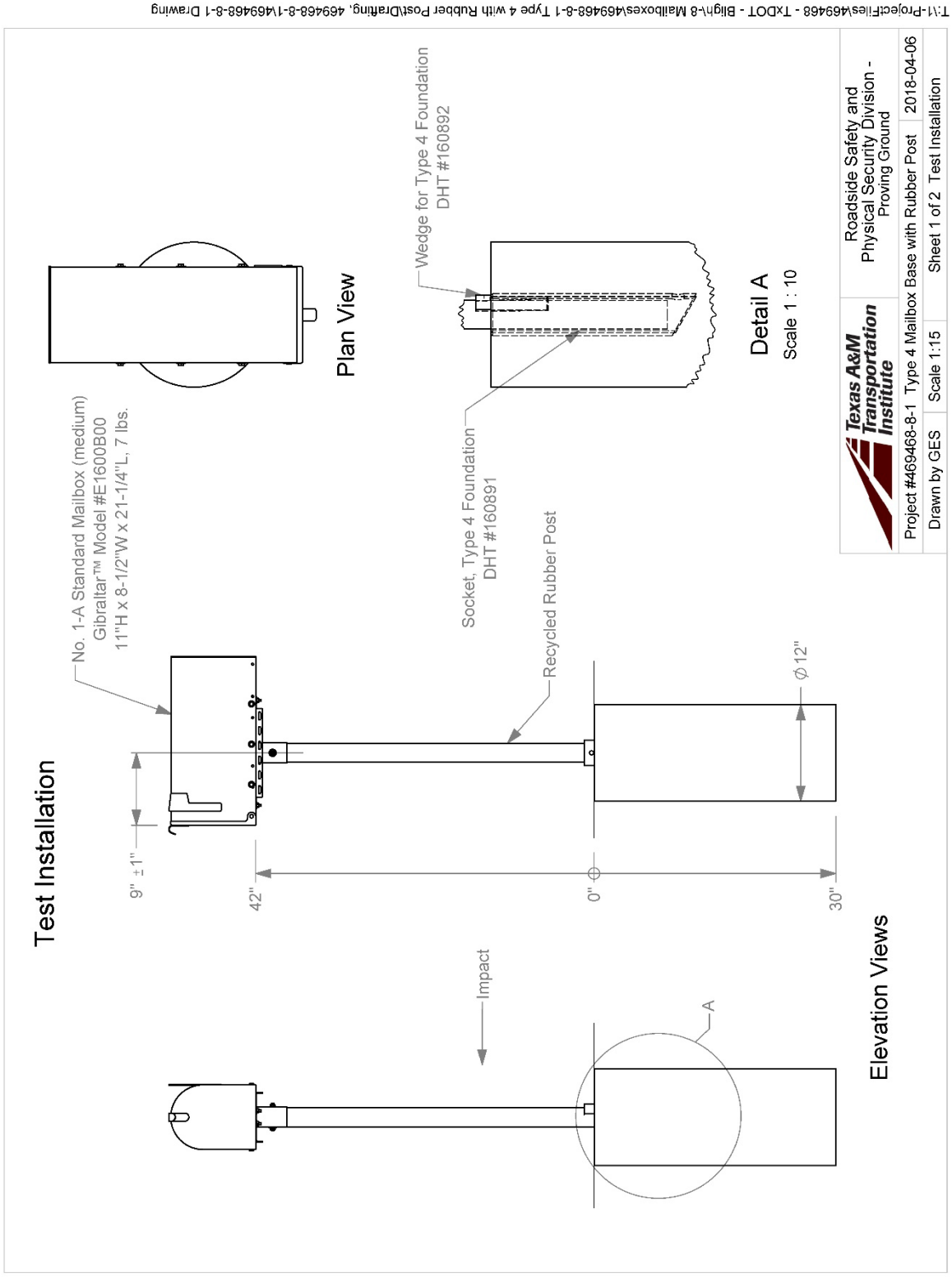

2a. All hex head bolts are grade 5.

Texas A&M Transportation Institute	Roadside Safety and Physical Security Division - Proving Ground	
Project #469468-8-1 Type 4 Mailbox Base with Rubber Post		2018-04-06
Drawn by GES	Scale 1:3	Sheet 2 of 2 Attachment Details

T:\1-ProjectFiles\469468 - TxDOT - Bligh\-8 Mailboxes\469468-8-1 Type 4 with Rubber Post\Drafting, 469468-8-1\469468-8-1 Drawing

Mailbox Bracket

DHT# 161443

Texas A&M Transportation Institute	Roadside Safety and Physical Security Division - Proving Ground	
Mailbox Bracket		2018-01-09
Drawn by GES	Scale 1:3	Sheet 1 of 1

T:\Drafting Department\Solidworks\Standard Parts\Mailbox Parts\Mailbox Part Drawings\161443

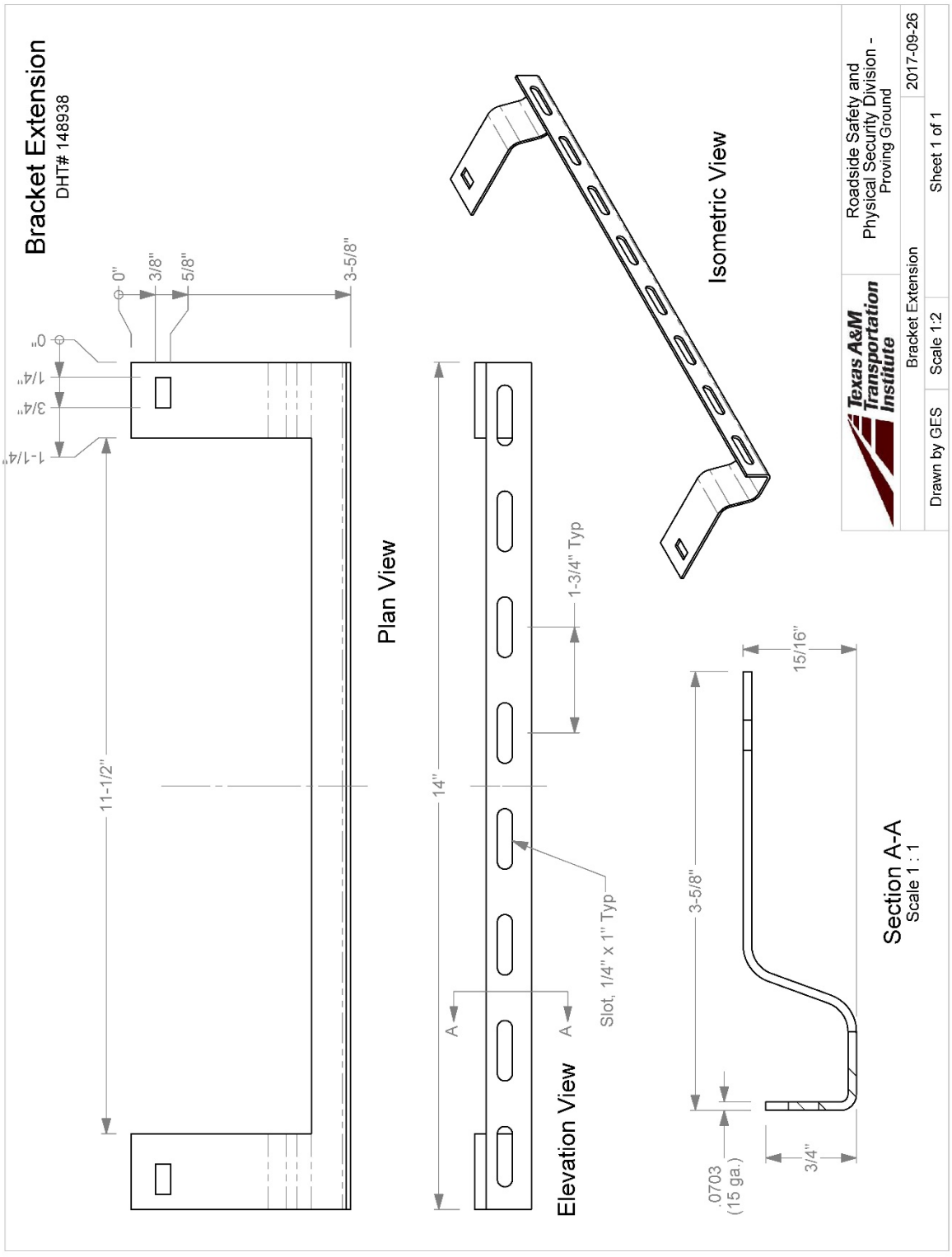
T:\Drafting Department\Solidworks\Standard Parts\Mailbox Parts\Mailbox Part Drawings\148938
Bracket Extension
DHT# 148938
0"
3/8"
5/8"
3-5/8"
0"
1/4"
3/4"
1-1/4"
11-1/2"
Plan View
14"
1-3/4" Typ
A
A
Slot, 1/4" x 1" Typ
Elevation View
Isometric View
3-5/8"
15/16"
.0703
(15 ga.)
3/4"
Section A-A
Scale 1 : 1
Texas A&M Transportation Institute
Roadside Safety and Physical Security Division - Proving Ground
Bracket Extension
2017-09-26
Drawn by GES
Scale 1:2
Sheet 1 of 1

H.1.2 Supporting Certification Documents

SEE BACK OF DELIVERY RECEIPT

DATE 01/23/18

DELIVERY RECEIPT

PAGE 1 OF 1

CENTRAL FREIGHT LINES INC.
P.O. Box 847084
Dallas, TX 75284-7084
(254) 772-2120

5 DDC 001 L82 CCBYY125
FREIGHT BILL # CFL#77652831-7
SHIPPER 7800 O
ATHENS-TXDOT
2400 NE LOOP 7
ATHENS TX 75752

ROUTING
0653851621 FB# 776528317

CONSIGNEE 0800
TEXAS A&M TRANSPORTATION INSTI
RELLIS CAMPUS BLDG 7092 S
BRYAN TX 778070000

REF #
BL SVA1802210
SCAC=CENF

0000000000 LBS

UNITS	P	HM	DESCRIPTION	WEIGHT IN LBS	RATE	CHARGES
2			MAILBX POSTS & HDWR 12345 BILLED FOR TERMINAL 7800 FUEL SURCHARGE FC CENFD 9352 100.5000 TRFB @@@SYN 065 - ORIGINAL CLASS 0001 LOOSE PIECE(S) 0001 PALLET(S) 4358429005 SOUTHEAST VOCATIONAL 012418 EXPECTED DELIVERY	216	M	
2			* TOTAL CHARGES ---- THIRD PARTY ** THANK YOU FOR YOUR BUSINESS AND ** * CONFIDENCE, CENTRAL FREIGHT LINES *	216		

EXTRA SERVICE PERFORMED
YES_____
NO _____

DRIVER

UNITS

DATE

TIME
13:58

RECEIVED IN GOOD ORDER EXCEPT AS NOTED
X
PRINT LAST NAME
X HAUG

RECEIVING CO. NAME

SEAL #

INTACT ON RECEIPT
X

SURCHARGE

AMT. DUE

AMT. COLLECTED

TR No. 0-6946-R2

H-6

2019-03-26

Report ID: INX6503

PeopleSoft Inventory

SHIPPING DOCUMENT

Page No: 1
Run Date: 1/22/2018

ORACLE

Origin:
ATHENS REGIONAL DIST. CENTER
2400 N.E. LOOP 7

ATHENS TX 75752

Destination:
58 Traffic Operations Division
118 E. Riverside Drive

Austin TX 78704

Business Unit: 29320
Shipping ID: 0000024316

Ship Line No	Order Number/ Delivery ID	Demand Src/ Source BU	Order Line/	Schedule Line/ Reason Code	Ship Date/ Ship Time	Item ID/Description	Qty Shipped - Ordering UOM / Qty Shipped - Shipping UOM	Contract ID	Route/ Route Stop
1	0010488206	IN 29320	1	1.00	01/22/2018 11:48:35 AM	45057257409 MULTIPLE SUPPORT, 54-1/2 IN. X	1 EA		
2	0010488206	IN 29320	2	1.00	01/22/2018 11:48:35 AM	45057252343 BRACKET, HIGH IMPACT 12 GA. A3	1 EA		
3	0010488206	IN 29320	3	1.00	01/22/2018 11:48:35 AM	80130571906 10 FEET STEEL TUBE, 2.375 INCH	1 EA		
4	0010488206	IN 29320	4	1.00	01/22/2018 11:48:35 AM	55083571053 3-1/2 IN. OD X 6 IN. L, TAPERS	3 EA		
5	0010488206	IN 29320	5	1.00	01/22/2018 11:48:35 AM	55083571004 2-1/2 IN. ID X 17 IN. L, W/30	3 EA		
6	0010488206	IN 29320	6	1.00	01/22/2018 11:48:35 AM	45057252350 BRACKET, HIGH IMPACT 14 GA. A3	5 EA		
7	0010488206	IN 29320	7	1.00	01/22/2018 11:48:35 AM	45057252251 BRACKET, 14 INCH BY 6 INCH, 14	2 EA		
8	0010488206	IN 29320	8	1.00	01/22/2018 11:48:35 AM	45057253002 EXTENSION, BRACKET, 14 INCH BY	9 EA		

2018-1-24 DUE

~~NOT DELIVERED~~ Arrived LATE

Report ID: INX6503 | PeopleSoft Inventory | Page No: 2

ORACLE

Origin:
ATHENS REGIONAL DIST. CENTER
2400 N.E. LOOP 7

ATHENS TX 75752

SHIPPING DOCUMENT

Destination:
58 Traffic Operations Division
118 E. Riverside Drive

Austin TX 78704

Run Date: 1/22/2018

Business Unit: 29320
Shipping ID: 0000024316

Part Name	DHT Number	Qty.
Multiple Mount Mailbox, white	164116	1
Bracket for Attaching Mailbox	162323	1
Mailbox Post, thin wall	143426	1
Wedge for Type 4 Foundation	160892	3
Socket, Type 4 Foundation	160891	3
Mailbox Bracket	161443	5
Mailbox Bracket	148939	2
Bracket Extension	148938	9
Recycled Rubber Mailbox Post		1

450 57 25 ~~7409~~ Needed Parts
450 57 25 2343
80[illegible]30 57 1906
530 83 57 1053
550 83 57 1004
450 57 25 2350
450 57 25 2251
450 57 25 3002

Part Name	DHT Number	Qty.
No. 2 Standard Mailbox (large)		2
No. 1-A Standard Mailbox (medium)		5
Bolt, 3/8 x 3 1/2" hex		1
Bolt, 3/8 x 3/4" hex		4
Nut, 3/8 hex		5
Washer, 3/8 lock		5
Washer, 3/8 flat		10
Bolt, 5/16 x 3 hex		6
Washer, 1/4 lock		4
Washer, 5/16 flat		7
Nut, 5/16 hex		6
Bolt, 1/4 x 3/4" hex		42
Nut, 1/4 hex		56
Washer, 1/4 flat		98
Carriage Bolt, 1/4 x 3/4"		18

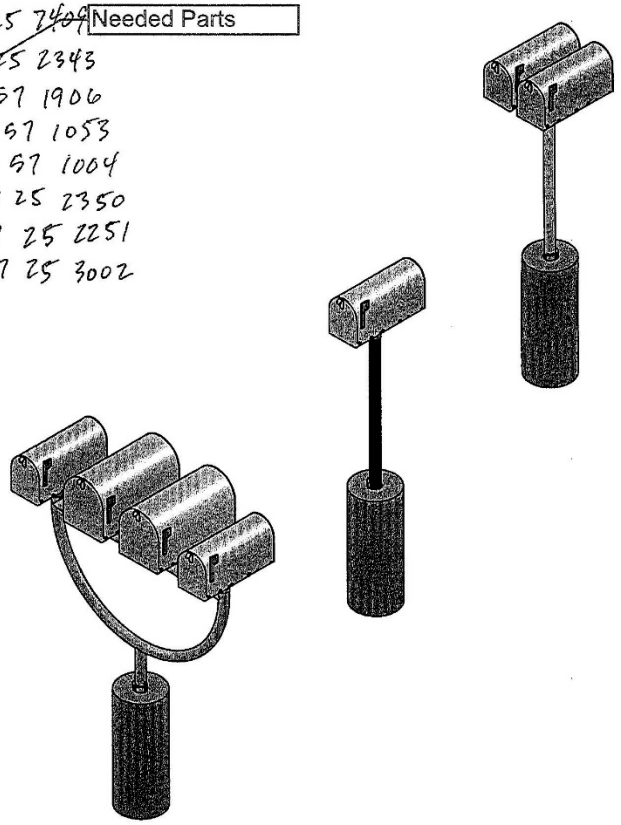

Texas A&M Transportation Institute	Roadside Safety and Physical Security Division - Proving Ground	
Project #469468-8 TxDOT Mailbox Tests		2018-01-11
Drawn by GES	Scale 1:30	Sheet 1 of 1 Parts List

T:\1-ProjectFiles\469468 - TxDOT - Bligh\-8 Mailboxes\469468-8-1 Type 4 with Rubber Post\Drafting, 469468-8-1\469468-8 Parts List

H.1.3 Vehicle Properties and Information

Table H.1. Vehicle Properties for Test No. 469468-8-1.

Date: 2018-04-04 Test No.: 469468-8-1 VIN No.: KNADH4A37B6864745

Year: 2011 Make: KIA Model: RIO

Tire Inflation Pressure: 32 PSI Odometer: 127508 Tire Size: 185/65R14

Describe any damage to the vehicle prior to test: NONE

● Denotes accelerometer location.

NOTES:

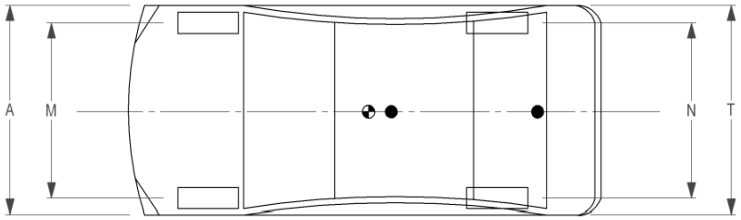

Engine Type: 4 CYL
Engine CID: 1.6 L
Transmission Type:
☑ Auto or ☐ Manual
☑ FWD ☐ RWD ☐ 4WD
Optional Equipment:
NONE

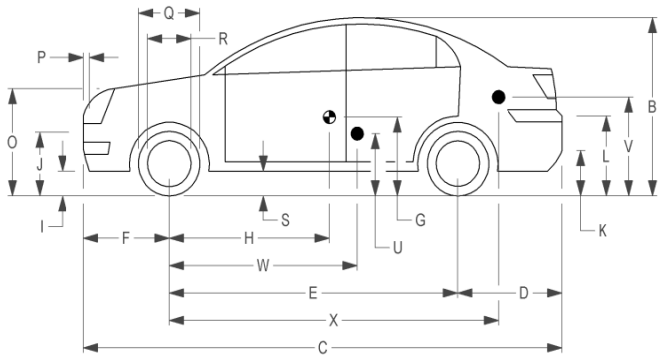

Dummy Data:
Type: 50 PERCENTILE
Mass: 165 LBS
Seat Position: DRIVER SIDE

Geometry: inches

A	66.38	F	33.00	K	12.25	P	4.12	U	15.00		
B	51.50	G		L	25.25	Q	22.50	V	20.75		
C	165.75	H	35.60	M	57.75	R	15.50	W	35.60		
D	34.00	I	7.75	N	57.70	S	8.25	X	106.00		
E	98.75	J	21.50	O	28.25	T	66.20				
	Wheel Center Ht Front		11.00		Wheel Center Ht Rear		11.00	W-H	0.00		

RANGE LIMIT: A = 65 ±3 inches; C = 169 ±8 inches; E = 98 ±5 inches; F = 35 ±4 inches; H = 39 ±4 inches; O = TOP OF RADIATOR SUPPORT ~~(24 ±4inches)~~; M+N/2 = 56 ±2 inches; W-H < 2 inches or use MASH Paragraph A4.3.2

GVWR Ratings:		**Mass:** lb	Curb	Test Inertial	Gross Static
Front	1718	M_{front}	1579	1555	1640
Back	1874	M_{rear}	887	878	958
Total	3638	M_{Total}	2466	2433	2598

Allowable TIM = 2420 lb ±55 lb | Allowable GSM = 2585 lb ± 55 lb

Mass Distribution:
lb LF: 777 RF: 778 LR: 417 RR: 461

Table H.2. Exterior Crush Measurements of Vehicle for Test No. 469468-8-1.

Date: 2018-04-04 Test No.: 469468-8-1 VIN No.: KNADH4A37B6864745

Year: 2011 Make: KIA Model: RIO

VEHICLE CRUSH MEASUREMENT SHEET[1]

Complete When Applicable	
End Damage	Side Damage
Undeformed end width _____	Bowing: B1 _____ X1 _____
Corner shift: A1 _____	B2 _____ X2 _____
A2 _____	
End shift at frame (CDC)	Bowing constant
(check one)	$\frac{X1+X2}{2} =$ _____
< 4 inches _____	
≥ 4 inches _____	

Note: Measure C_1 to C_6 from Driver to Passenger Side in Front or Rear impacts – Rear to Front in Side Impacts.

Specific Impact Number	Plane* of C-Measurements	Direct Damage		Field L**	C_1	C_2	C_3	C_4	C_5	C_6	±D
		Width** (CDC)	Max*** Crush								
	None measureable										
	Units in inches										

[1]Table taken from National Accident Sampling System (NASS).

*Identify the plane at which the C-measurements are taken (e.g., at bumper, above bumper, at sill, above sill, at beltline, etc.) or label adjustments (e.g., free space).

Free space value is defined as the distance between the baseline and the original body contour taken at the individual C locations. This may include the following: bumper lead, bumper taper, side protrusion, side taper, etc. Record the value for each C-measurement and maximum crush.

**Measure and document on the vehicle diagram the beginning or end of the direct damage width and field L (e.g., side damage with respect to undamaged axle).

***Measure and document on the vehicle diagram the location of the maximum crush.

Note: Use as many lines/columns as necessary to describe each damage profile.

Table H.3. Occupant Compartment Measurements of Vehicle for Test No. 469468-8-1.

Date:	2018-04-04	Test No.:	469468-8-1	VIN No.:	KNADH4A37B6864745
Year:	2011	Make:	KIA	Model:	RIO

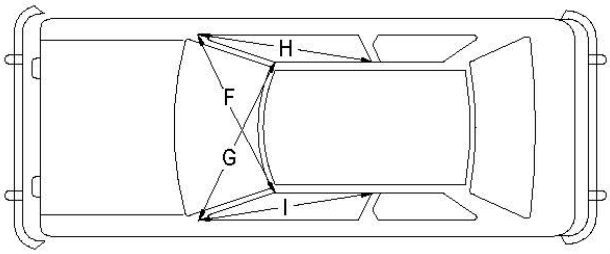

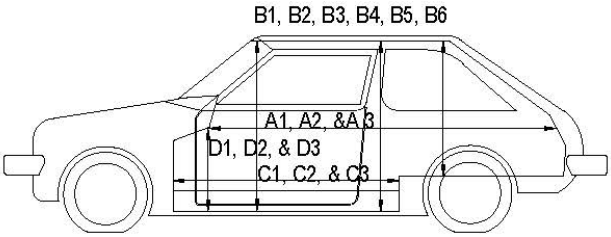

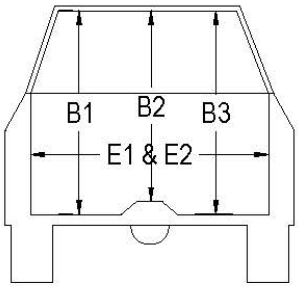

OCCUPANT COMPARTMENT DEFORMATION MEASUREMENT

	Before	After	Differ.
	inches		
A1	67.50	67.50	0.00
A2	67.25	67.25	0.00
A3	67.75	67.75	0.00
B1	40.50	40.50	0.00
B2	39.00	39.00	0.00
B3	40.50	40.50	0.00
B4	36.25	36.25	0.00
B5	36.00	36.00	0.00
B6	36.25	36.25	0.00
C1	26.00	26.00	0.00
C2	0.00	0.00	0.00
C3	26.00	26.00	0.00
D1	9.50	9.50	0.00
D2	0.00	0.00	0.00
D3	9.50	9.50	0.00
E1	51.50	51.50	0.00
E2	51.00	51.00	0.00
F	51.00	51.00	0.00
G	51.00	51.00	0.00
H	37.50	37.50	0.00
I	37.50	37.50	0.00
J*	51.00	51.00	0.00

*Lateral area across the cab from
driver's side kickpanel to passenger's side kickpanel.

H.1.4 Sequential Photographs

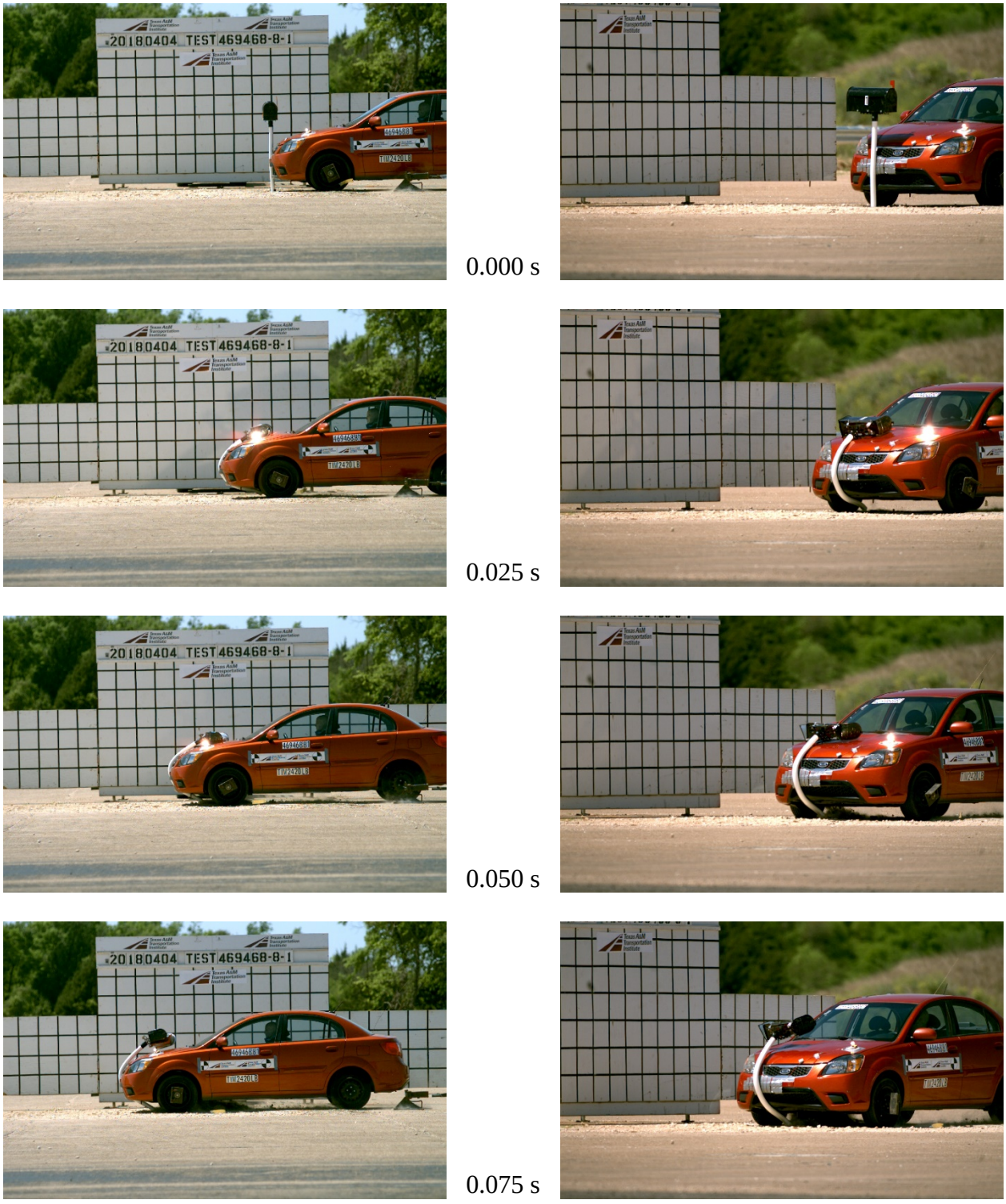

Figure H.1. Sequential Photographs for Test No. 469468-8-1 (Perpendicular and Oblique Views).

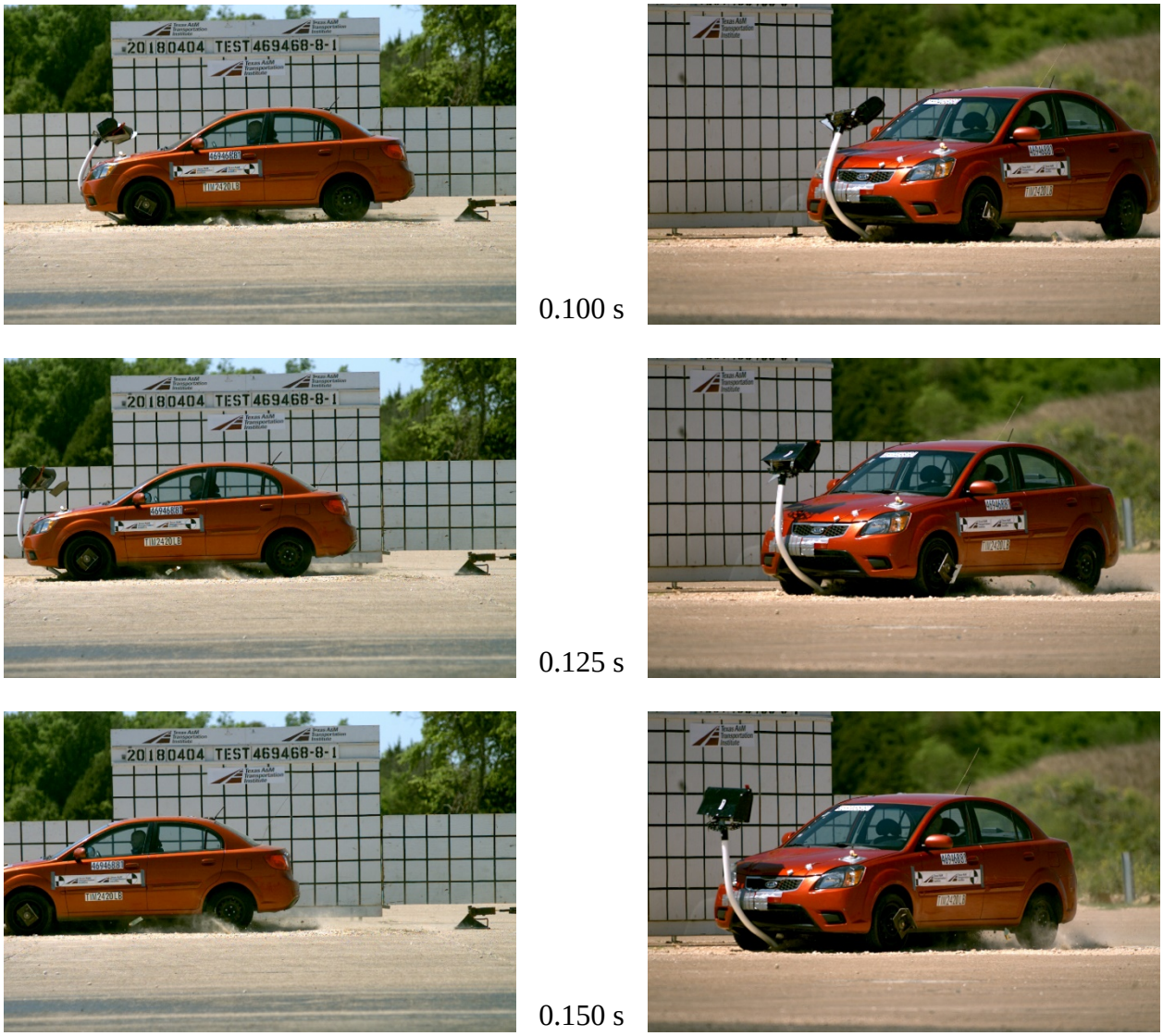

Figure H.1. Sequential Photographs for Test No. 469468-8-1 (Perpendicular and Oblique Views) (Continued).

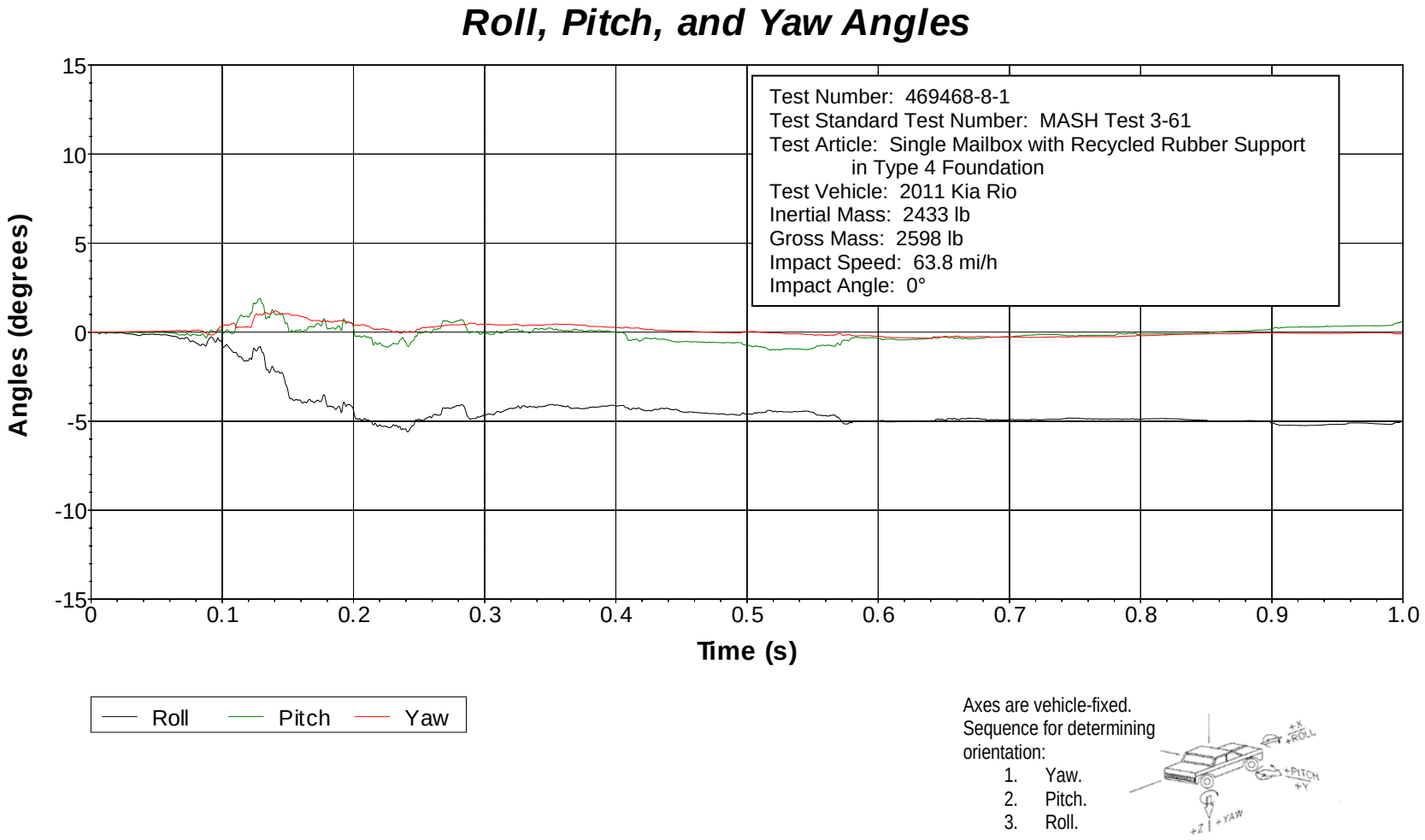

Figure H.2. Vehicle Angular Displacements for Test No. 469468-8-1.

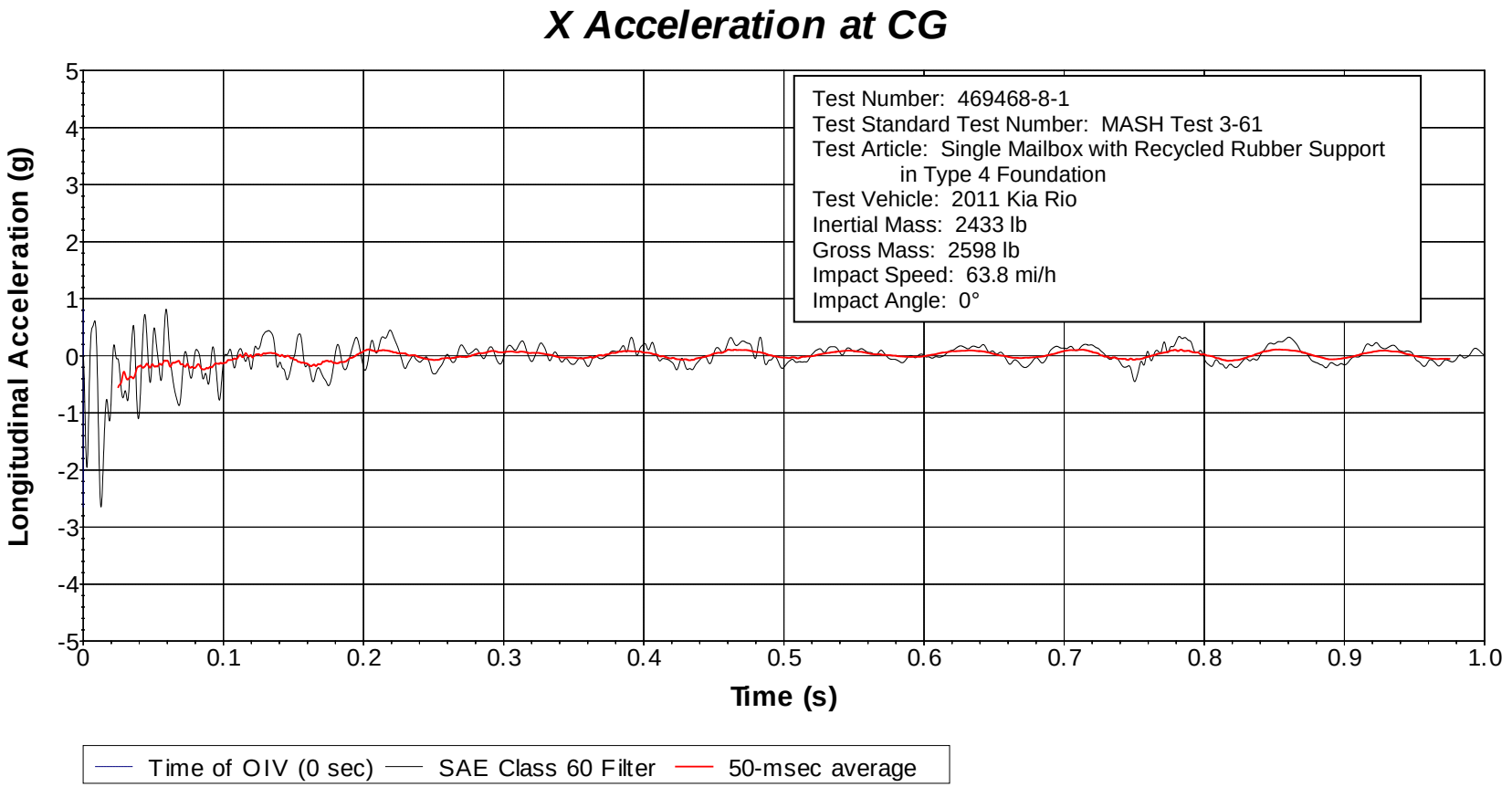

Figure H.3. Vehicle Longitudinal Accelerometer Trace for Test No. 469468-8-1 (Accelerometer Located at Center of Gravity).

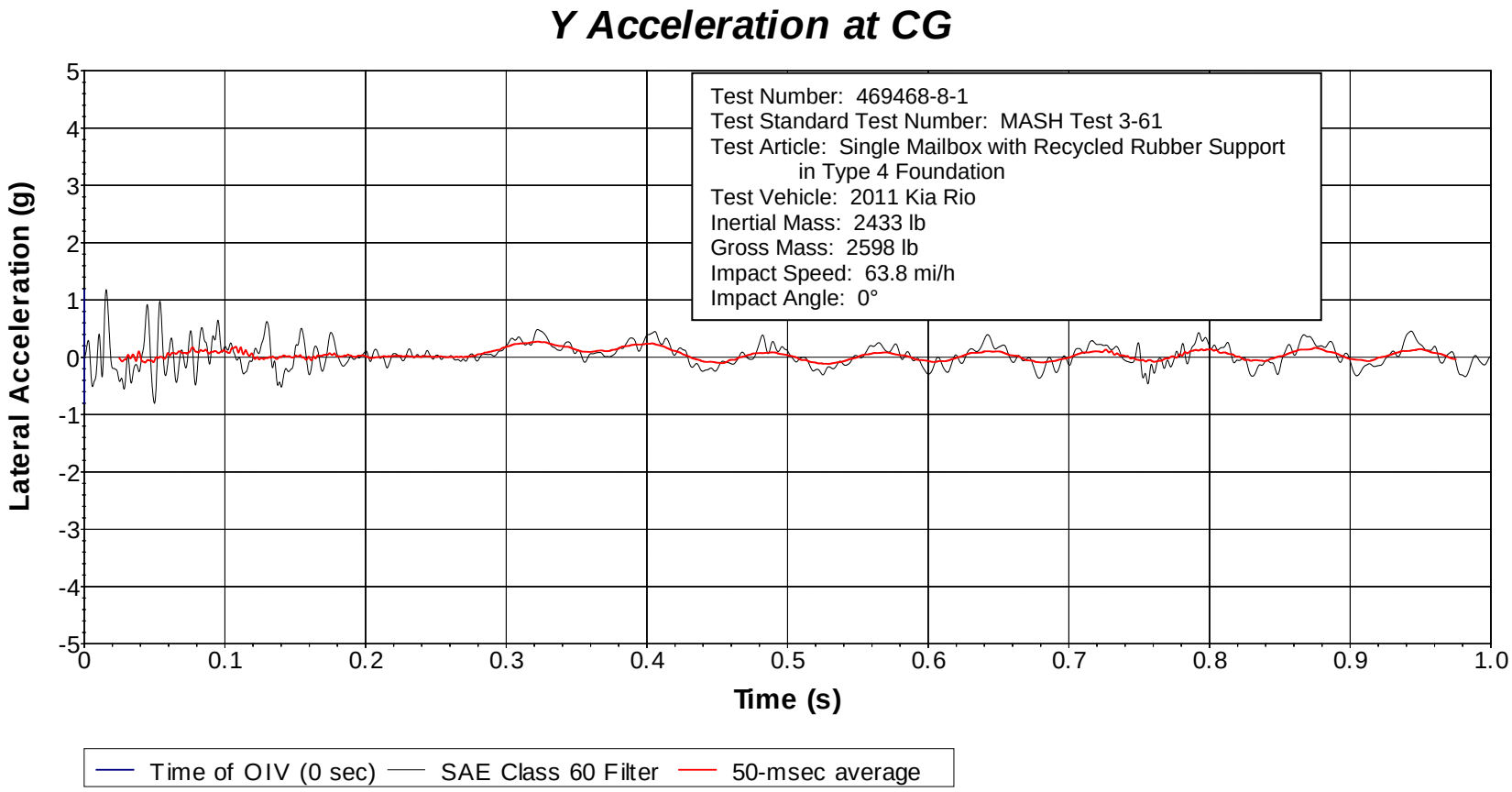

Figure H.4. Vehicle Lateral Accelerometer Trace for Test No. 469468-8-1 (Accelerometer Located at Center of Gravity).

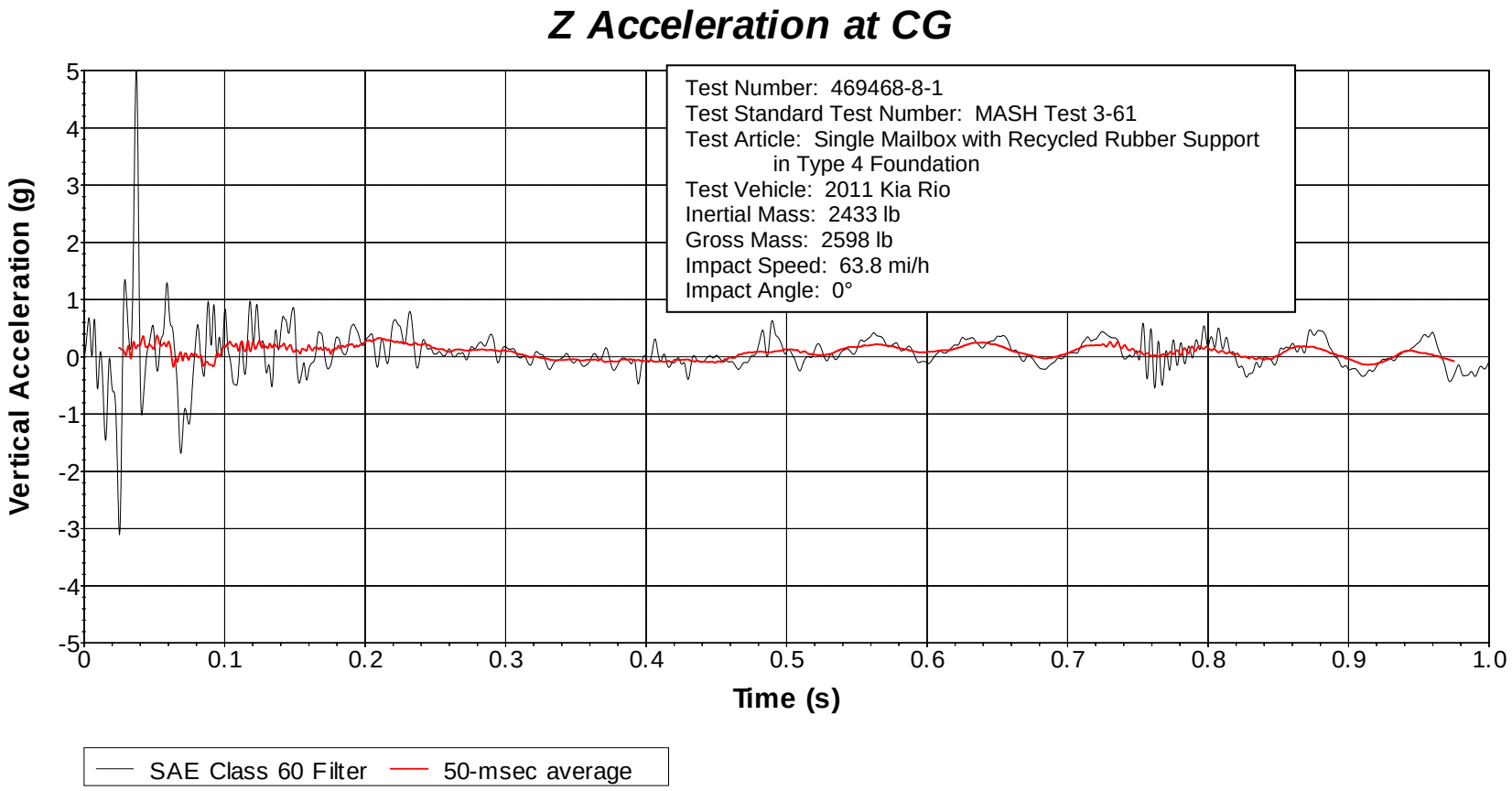

Figure H.5. Vehicle Vertical Accelerometer Trace for Test No. 469468-8-1 (Accelerometer Located at Center of Gravity).

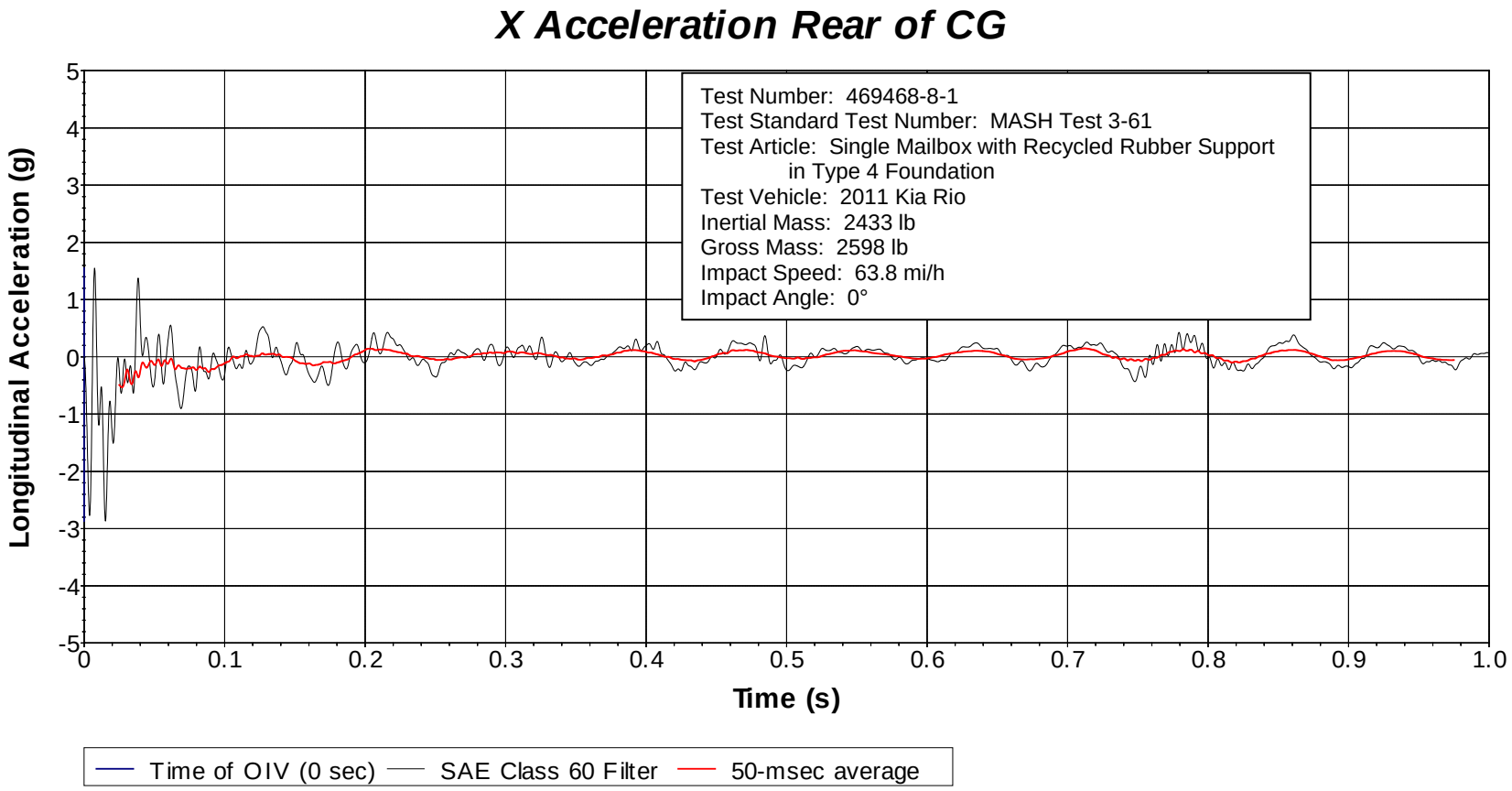

Figure H.6. Vehicle Longitudinal Accelerometer Trace for Test No. 469468-8-1 (Accelerometer Located Rear of Center of Gravity).

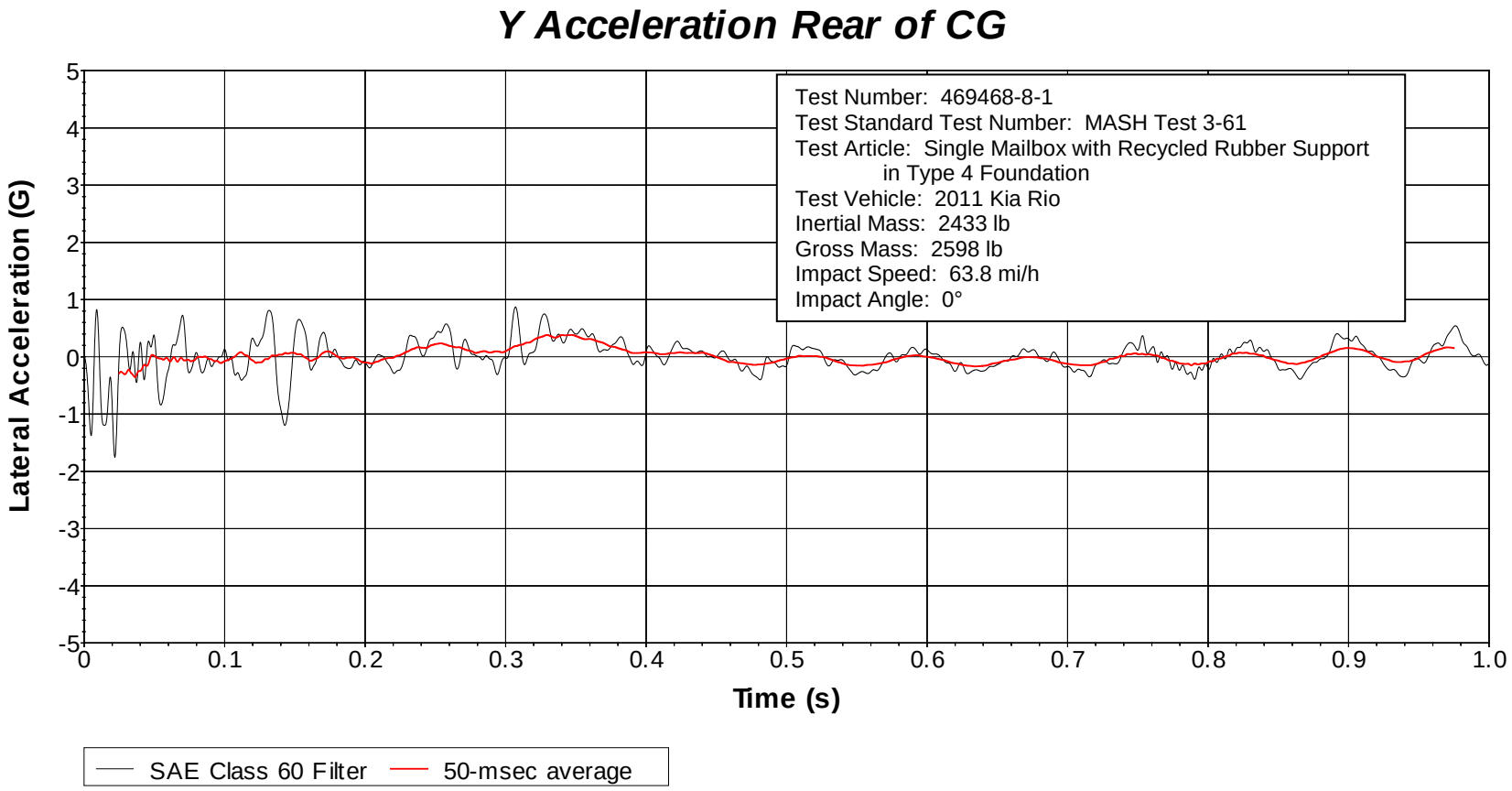

Figure H.7. Vehicle Lateral Accelerometer Trace for Test No. 469468-8-1 (Accelerometer Located Rear of Center of Gravity).

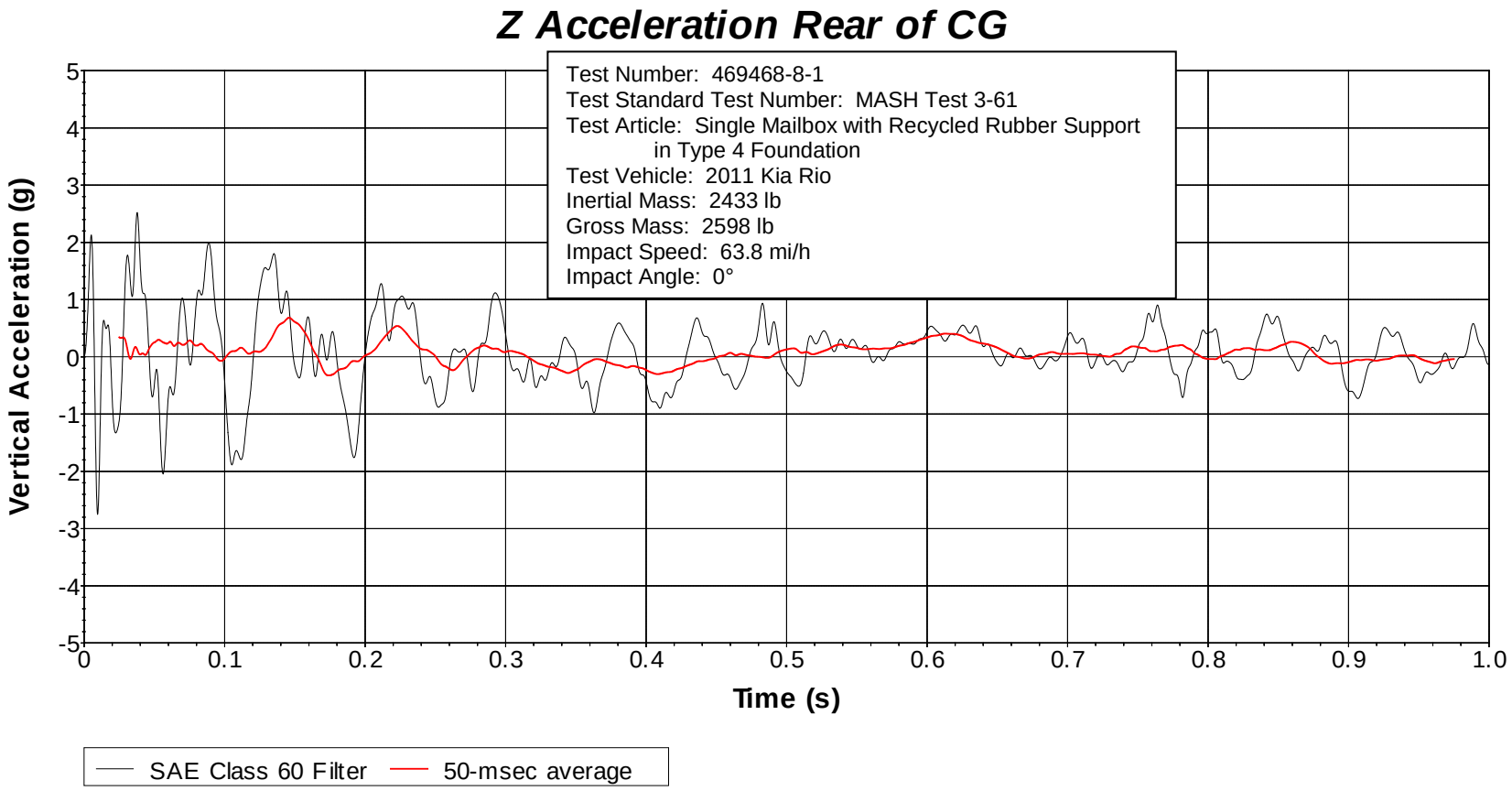

Figure H.8. Vehicle Vertical Accelerometer Trace for Test No. 469468-8-1 (Accelerometer Located Rear of Center of Gravity).

H.2 *MASH* TEST 3-61 ON DOUBLE MAILBOX WITH THIN-WALL GALVANIZED SUPPORT IN TYPE 4 FOUNDATION

H.2.1 Test Article Details

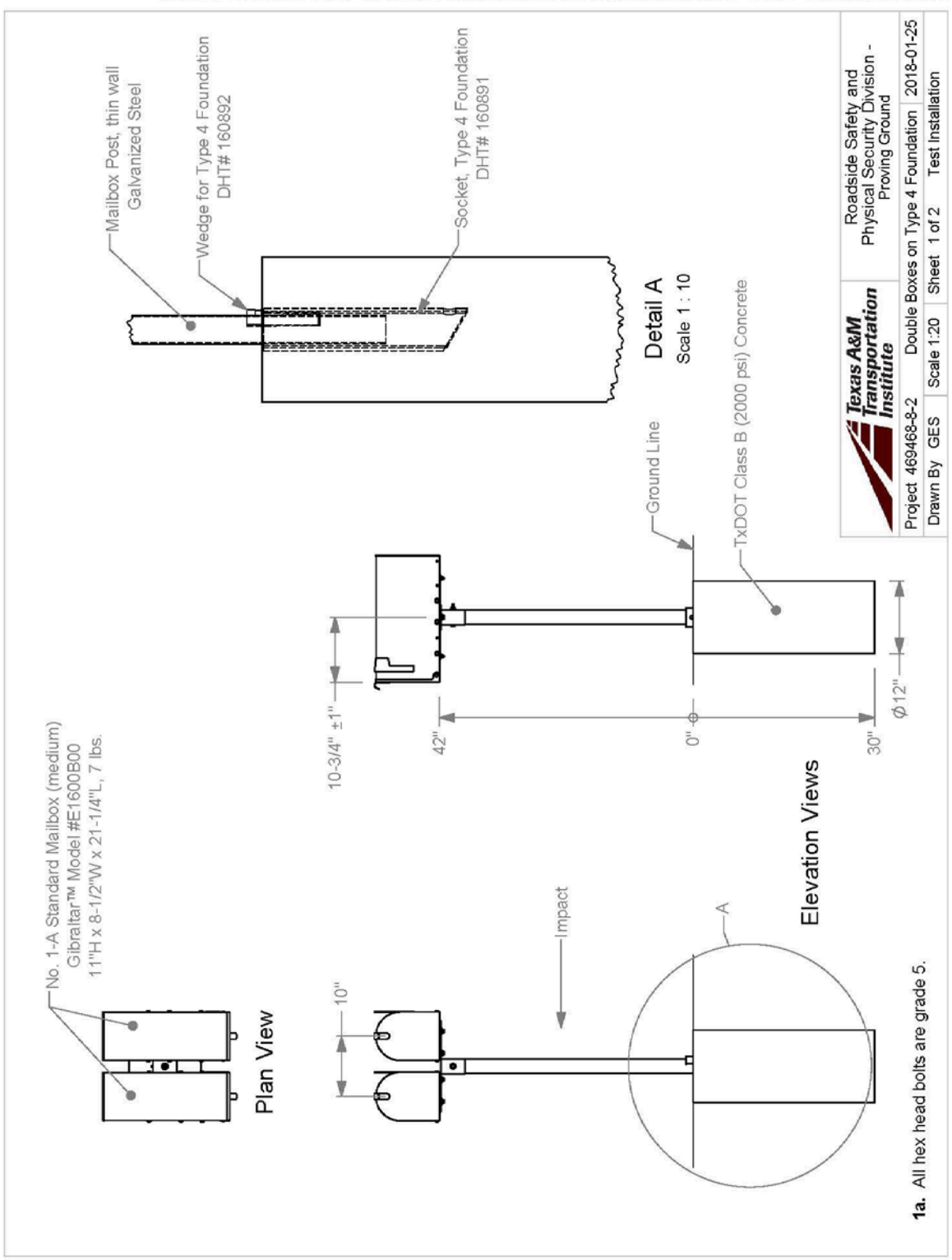

Mailbox Connection Details

Typical both sizes unless otherwise indicated

2a. All hex head bolts are grade 5.

2a. All hex bolts are Grade 5.

2b. The Bracket Extensions attach to opposite sides of the mailboxes, but the hardware details are otherwise identical for each.

Texas A&M Transportation Institute	Roadside Safety and Physical Security Division - Proving Ground	
Project 469468-8-2	Double Boxes on Type 4 Foundation	2018-01-25
Drawn By GES	Scale 1:3	Sheet 2 of 2 Attachment Details

T:\1-ProjectFiles\469468 - TxDOT - Bligh\8 Mailboxes\469468-8-2 Type 4 with White Post\Drafting, 469468-8-2\469468-8-2 Drawing

Bracket for Attaching Mailbox

DHT# 162323

Plan View

Isometric View

Section A-A

Elevation View

Texas A&M Transportation Institute	Roadside Safety and Physical Security Division - Proving Ground	
Bracket for Attaching Mailbox		2017-09-18
Drawn by GES	Scale 1:3	Sheet 1 of 1

T:\Drafting Department\Solidworks\Standard Parts\Mailbox Parts\Mailbox Part Drawings\1162323

Mailbox Bracket
DHT# 148939
0"
2-3/8"
3-1/4"
6-5/16"
6-5/8"
0"
3/8"
1-7/8"
2-5/8"
Slots, 7/16" x 1-5/16"
Typ x 4
Slots, 1-1/2" x 4-1/2"
Typ x 4
Plan View
Isometric View
14"
11"
A
A
5/16"
1-3/4" Typ
Slots, 5/16" x 1"
Typ x 6
Elevation View
6-1/4"
7/8"
.0740
Section A-A
Texas A&M Transportation Institute
Roadside Safety and Physical Security Division - Proving Ground
Mailbox Bracket
2017-09-26
Drawn by GES
Scale 1:3
Sheet 1 of 1
T:\Drafting Department\Solidworks\Standard Parts\Mailbox Parts\Mailbox Part Drawings\1148939

Bracket Extension
DHT# 148938
1"
3/4"
1/4"
0"
12"
0"
3/8"
5/8"
3-5/8"
Plan View
14"
A
A
Elevation View
Slot, 1/4" x 3/4" Typ
1-3/4" Typ
3-5/8"
.0703
(15 ga.)
3/4"
15/16"
Section A-A
Scale 1 : 1
Isometric View
Texas A&M Transportation Institute
Roadside Safety and Physical Security Division - Proving Ground
Bracket Extension
2017-09-26
Drawn by GES
Scale 1:2
Sheet 1 of 1
T:\Drafting Department\Solidworks\Standard Parts\Mailbox Parts\Mailbox Part Drawings\148938

H.2.2 Vehicle Properties and Information

Table H.4. Vehicle Properties for Test No. 469468-8-2.

Date: 2018-04-03 Test No.: 469468-8-2 VIN No.: KNADH430B6731342

Year: 2011 Make: KIA Model: RIO

Tire Inflation Pressure: 32 PSI Odometer: 155658 Tire Size: 185/65R14

Describe any damage to the vehicle prior to test: NONE

● Denotes accelerometer location.

NOTES:

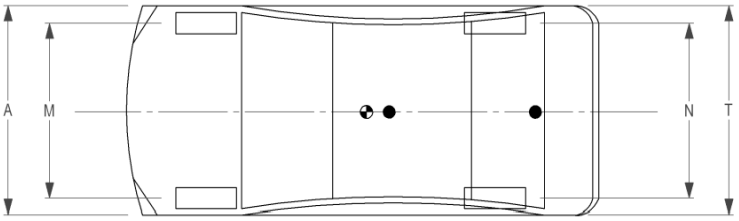

Engine Type: 4 CYL
Engine CID: 1.6 L
Transmission Type:
☑ Auto or ☐ Manual
☑ FWD ☐ RWD ☐ 4WD
Optional Equipment:
NONE

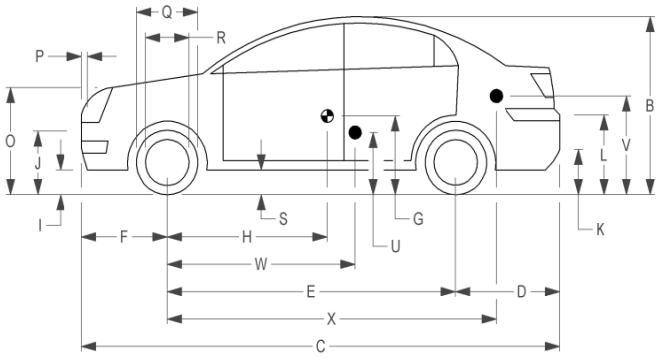

Dummy Data:
Type: 50 PERCENTILE
Mass: 165 LBS
Seat Position: DRIVER SIDE

Geometry: inches

A	66.38	F	33.00	K	12.25	P	4.12	U	15.00		
B	51.50	G		L	25.25	Q	22.50	V	20.75		
C	165.75	H	36.80	M	57.75	R	15.50	W	36.80		
D	34.00	I	7.75	N	57.70	S	8.25	X	107.00		
E	98.75	J	21.50	O	28.25	T	66.20				
Wheel Center Ht Front		11.00		Wheel Center Ht Rear		11.00		W-H	0.00		

RANGE LIMIT: A = 65 ±3 inches; C = 169 ±8 inches; E = 98 ±5 inches; F = 35 ±4 inches; H = 39 ±4 inches; O = TOP OF RADIATOR SUPPORT ~~(24 ±4 inches)~~; M+N/2 = 56 ±2 inches; W-H < 2 inches or use MASH Paragraph A4.3.2

GVWR Ratings:		**Mass:** lb	Curb	Test Inertial	Gross Static
Front	1718	M_{front}	1580	1530	1615
Back	1874	M_{rear}	875	910	990
Total	3638	M_{Total}	2455	2440	2605

Allowable TIM = 2420 lb ±55 lb | Allowable GSM = 2585 lb ± 55 lb

Mass Distribution:
lb LF: 780 RF: 750 LR: 430 RR: 480

Table H.5. Exterior Crush Measurements of Vehicle for Test No. 469468-8-2.

Date: 2018-04-03 Test No.: 469468-8-2 VIN No.: KNADH430B6731342

Year: 2011 Make: KIA Model: RIO

VEHICLE CRUSH MEASUREMENT SHEET[1]

Complete When Applicable	
End Damage	Side Damage
Undeformed end width _____	Bowing: B1 _____ X1 _____
Corner shift: A1 _____	B2 _____ X2 _____
A2 _____	
End shift at frame (CDC)	Bowing constant
(check one)	$\frac{X1+X2}{2}$ = _____
< 4 inches _____	
≥ 4 inches _____	

Note: Measure C_1 to C_6 from Driver to Passenger Side in Front or Rear impacts – Rear to Front in Side Impacts.

Specific Impact Number	Plane* of C-Measurements	Direct Damage		Field L**	C_1	C_2	C_3	C_4	C_5	C_6	±D
		Width** (CDC)	Max*** Crush								
	None measureable										
	Units in inches										

[1]Table taken from National Accident Sampling System (NASS).

*Identify the plane at which the C-measurements are taken (e.g., at bumper, above bumper, at sill, above sill, at beltline, etc.) or label adjustments (e.g., free space).

Free space value is defined as the distance between the baseline and the original body contour taken at the individual C locations. This may include the following: bumper lead, bumper taper, side protrusion, side taper, etc. Record the value for each C-measurement and maximum crush.

**Measure and document on the vehicle diagram the beginning or end of the direct damage width and field L (e.g., side damage with respect to undamaged axle).

***Measure and document on the vehicle diagram the location of the maximum crush.

Note: Use as many lines/columns as necessary to describe each damage profile.

Table H.6. Occupant Compartment Measurements of Vehicle for Test No. 469468-8-2.

Date:	2018-04-03	Test No.:	469468-8-2	VIN No.:	KNADH430B6731342
Year:	2011	Make:	KIA	Model:	RIO

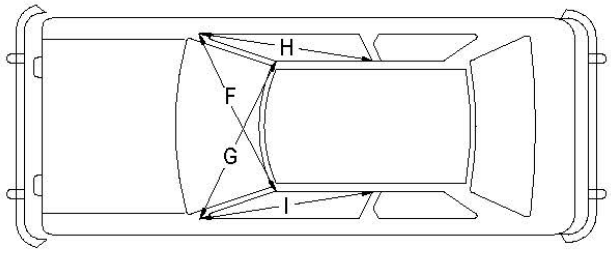

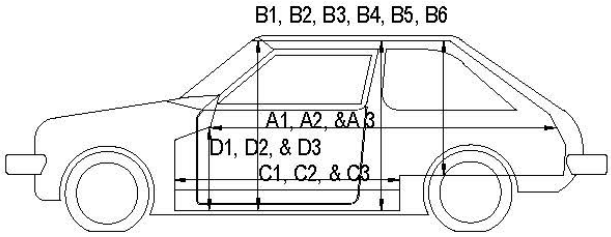

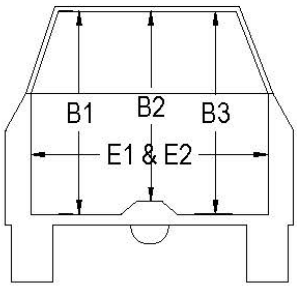

OCCUPANT COMPARTMENT DEFORMATION MEASUREMENT

	Before	After	Differ.
	inches		
A1	67.50	67.50	0.00
A2	67.25	67.25	0.00
A3	67.75	67.75	0.00
B1	40.50	40.50	0.00
B2	39.00	39.00	0.00
B3	40.50	40.50	0.00
B4	36.25	36.25	0.00
B5	36.00	36.00	0.00
B6	36.25	36.25	0.00
C1	26.00	26.00	0.00
C2	0.00	0.00	0.00
C3	26.00	26.00	0.00
D1	9.50	9.50	0.00
D2	0.00	0.00	0.00
D3	9.50	9.50	0.00
E1	51.50	51.50	0.00
E2	51.00	51.00	0.00
F	51.00	51.00	0.00
G	51.00	51.00	0.00
H	37.50	37.50	0.00
I	37.50	37.50	0.00
J*	51.00	51.00	0.00

*Lateral area across the cab from
driver's side kickpanel to passenger's side kickpanel.

H.2.3 Sequential Photographs

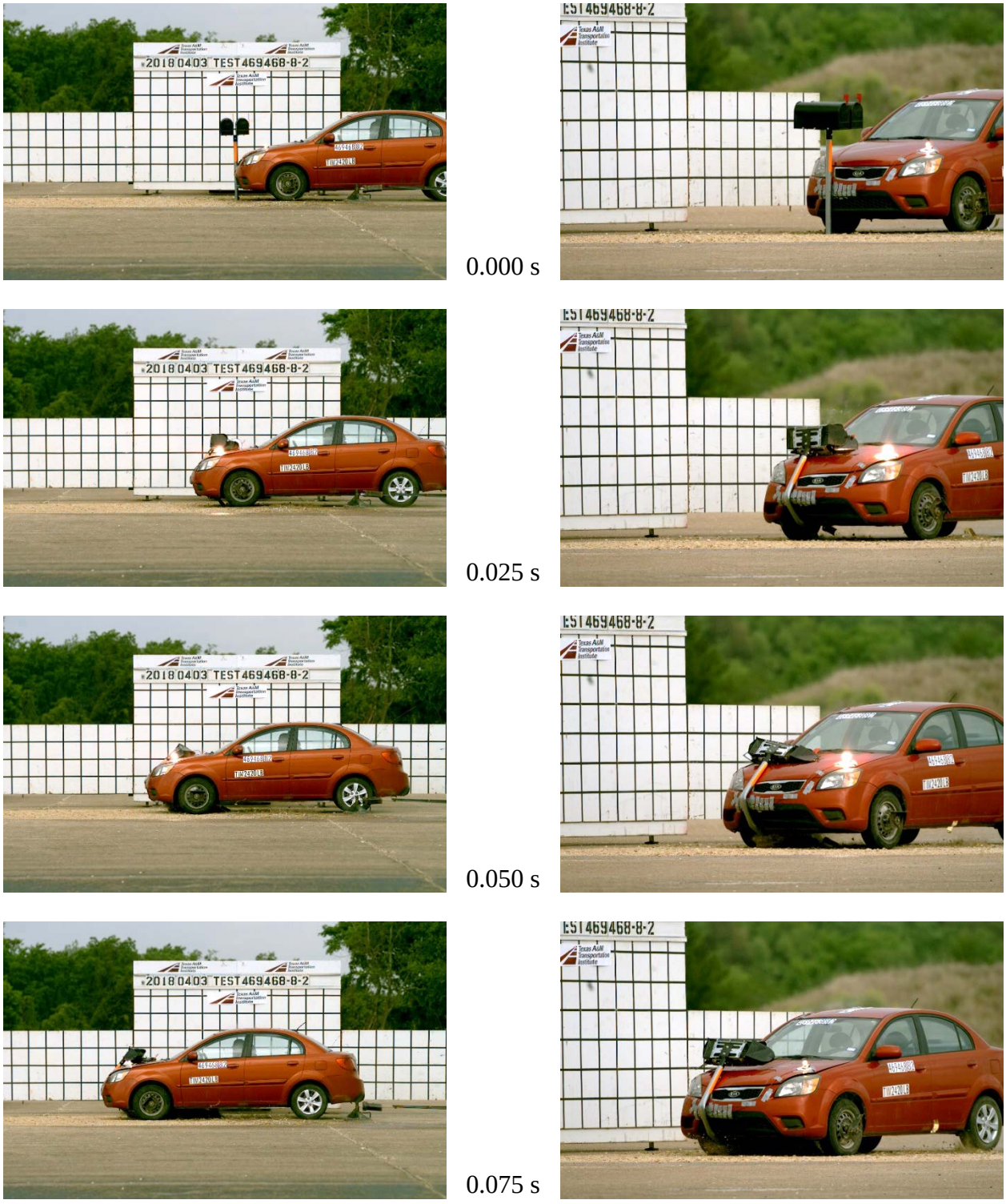

Figure H.9. Sequential Photographs for Test No. 469468-8-2 (Perpendicular and Oblique Views).



0.100 s




0.150 s




0.200 s




0.250 s


Figure H.9. Sequential Photographs for Test No. 469468-8-2 (Perpendicular and Oblique Views) (Continued).

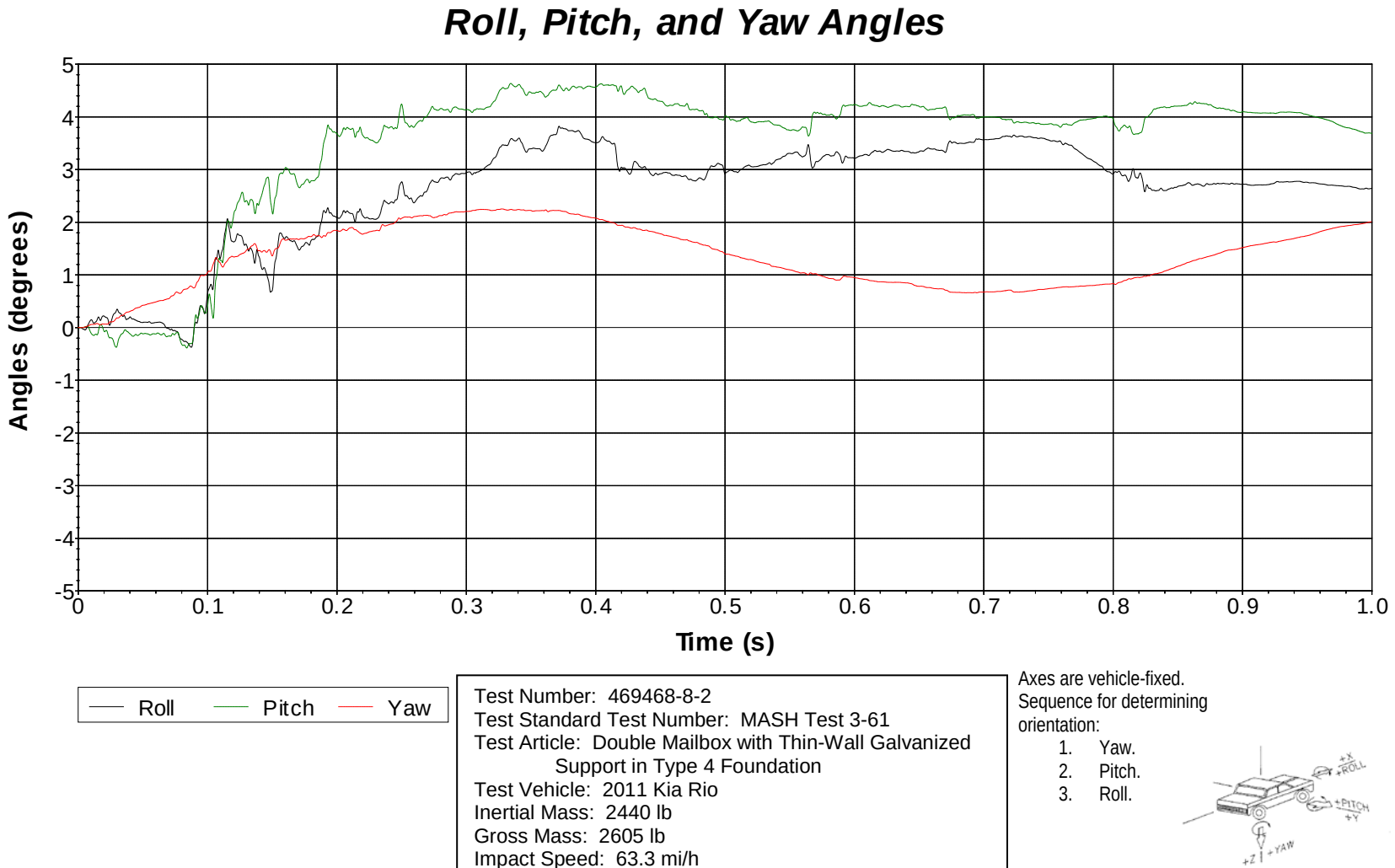

Figure H.10. Vehicle Angular Displacements for Test No. 469468-8-2.

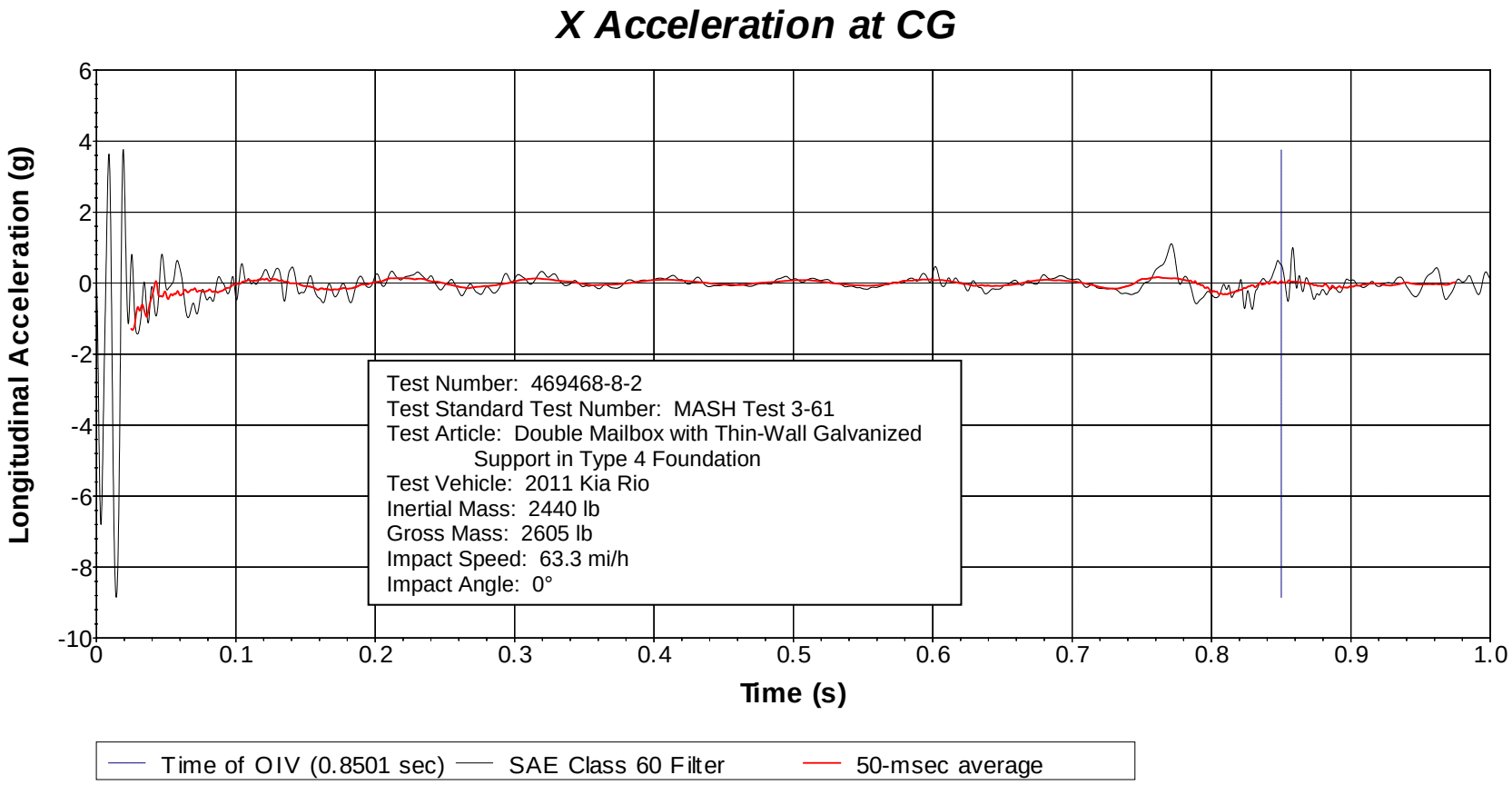

Figure H.11. Vehicle Longitudinal Accelerometer Trace for Test No. 469468-8-2 (Accelerometer Located at Center of Gravity).

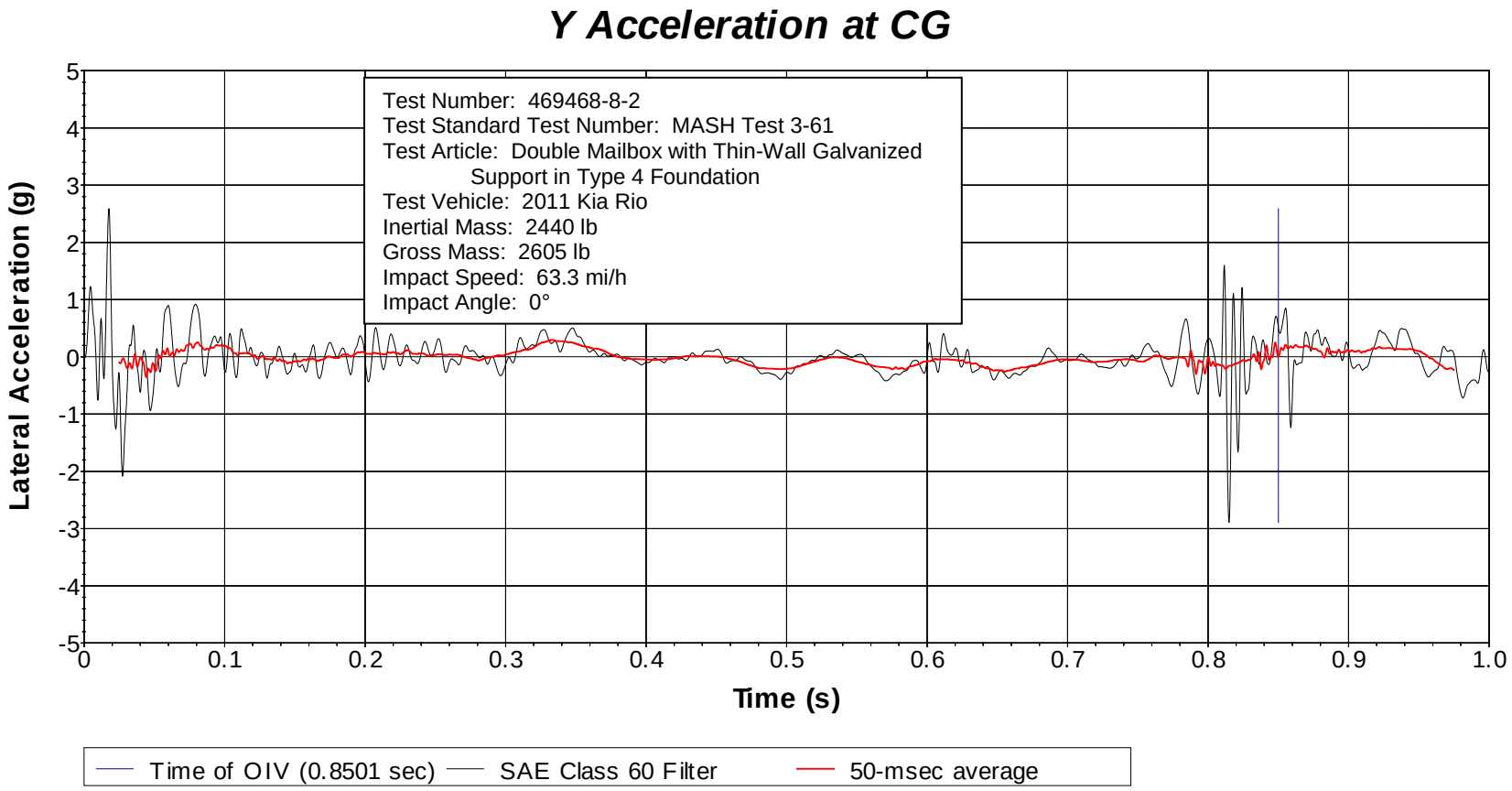

Figure H.12. Vehicle Lateral Accelerometer Trace for Test No. 469468-8-2 (Accelerometer Located at Center of Gravity).

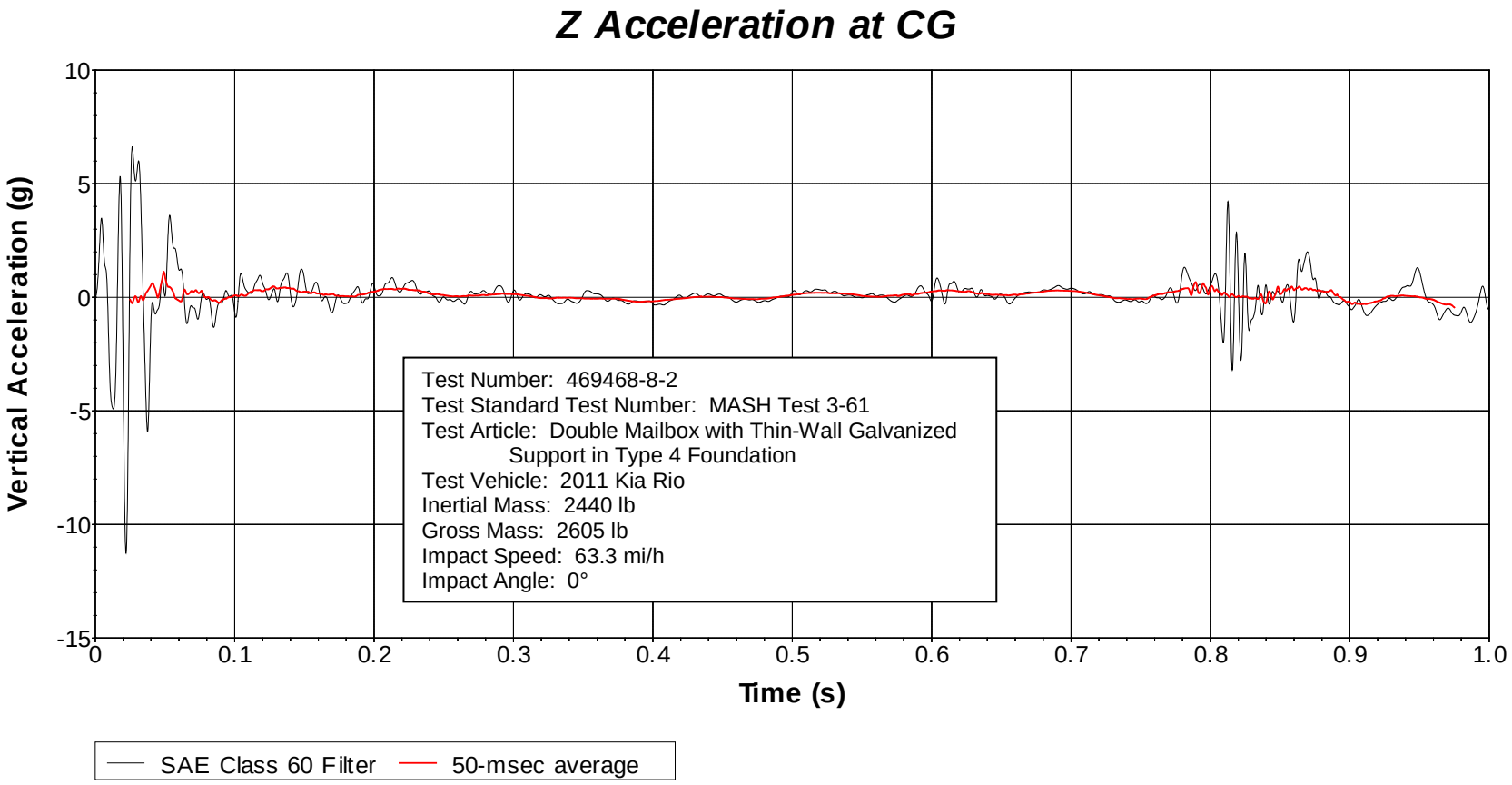

Figure H.13. Vehicle Vertical Accelerometer Trace for Test No. 469468-8-1 (Accelerometer Located at Center of Gravity).

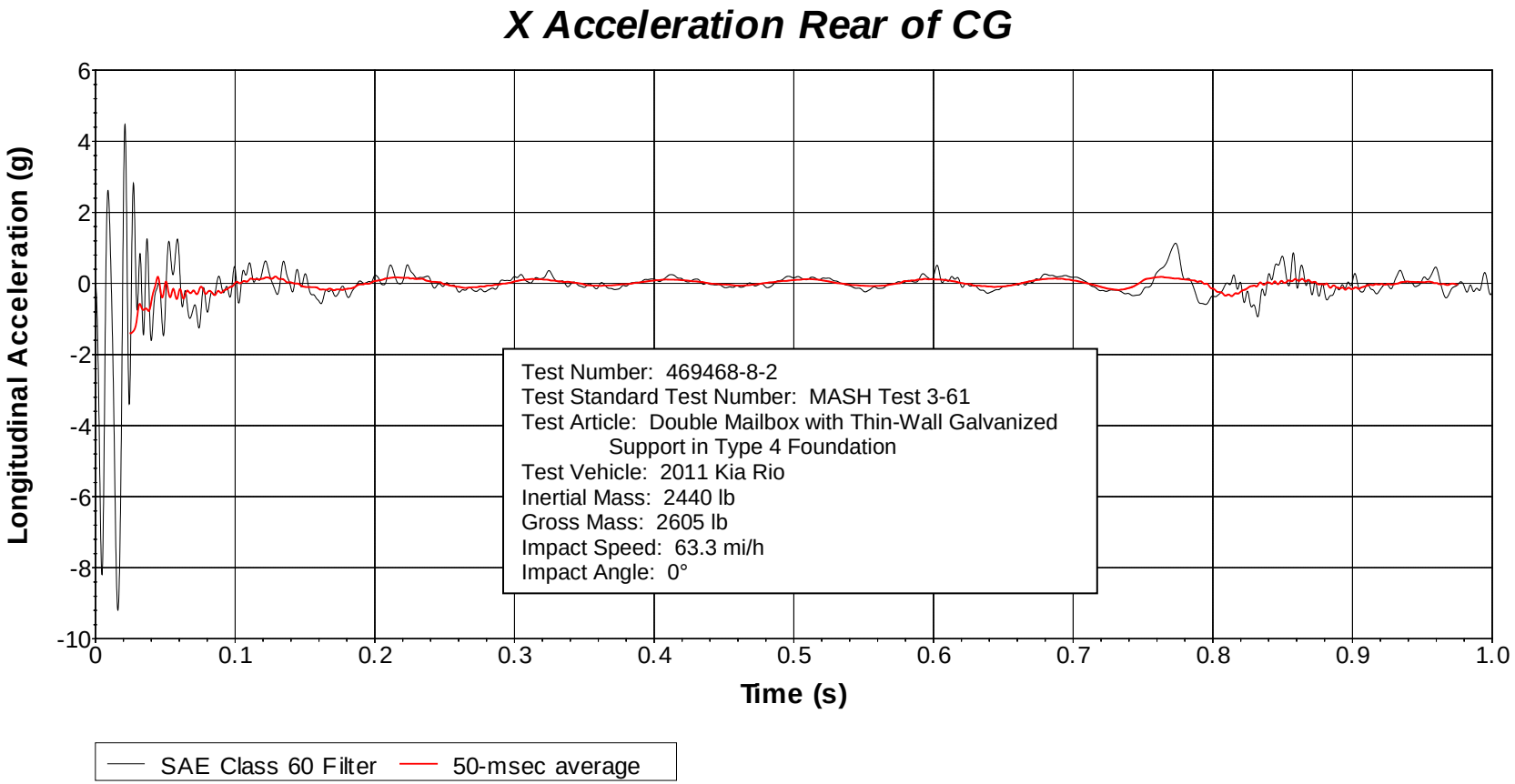

Figure H.14. Vehicle Longitudinal Accelerometer Trace for Test No. 469468-8-1 (Accelerometer Located Rear of Center of Gravity).

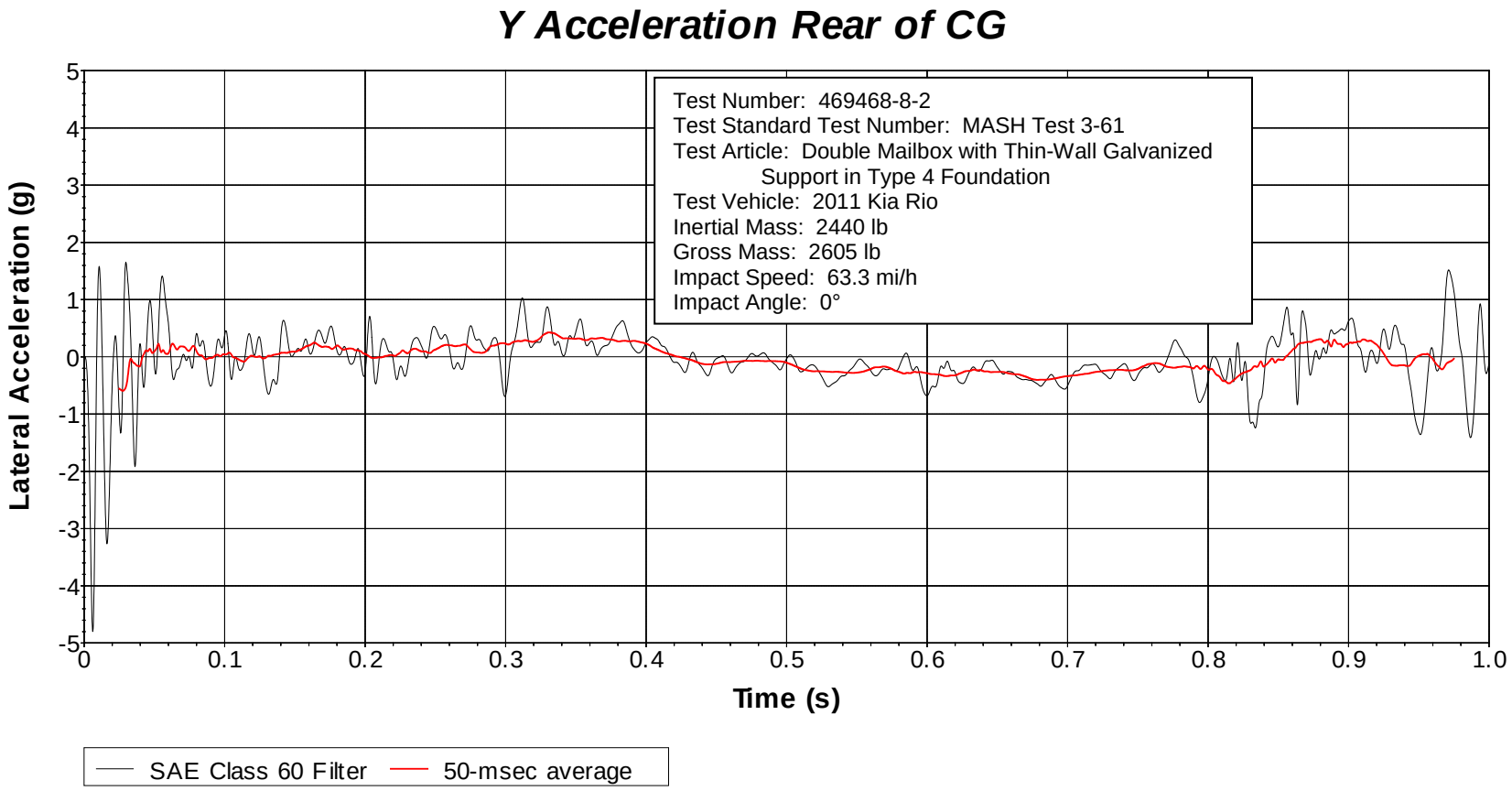

Figure H.15. Vehicle Lateral Accelerometer Trace for Test No. 469468-8-1 (Accelerometer Located Rear of Center of Gravity).

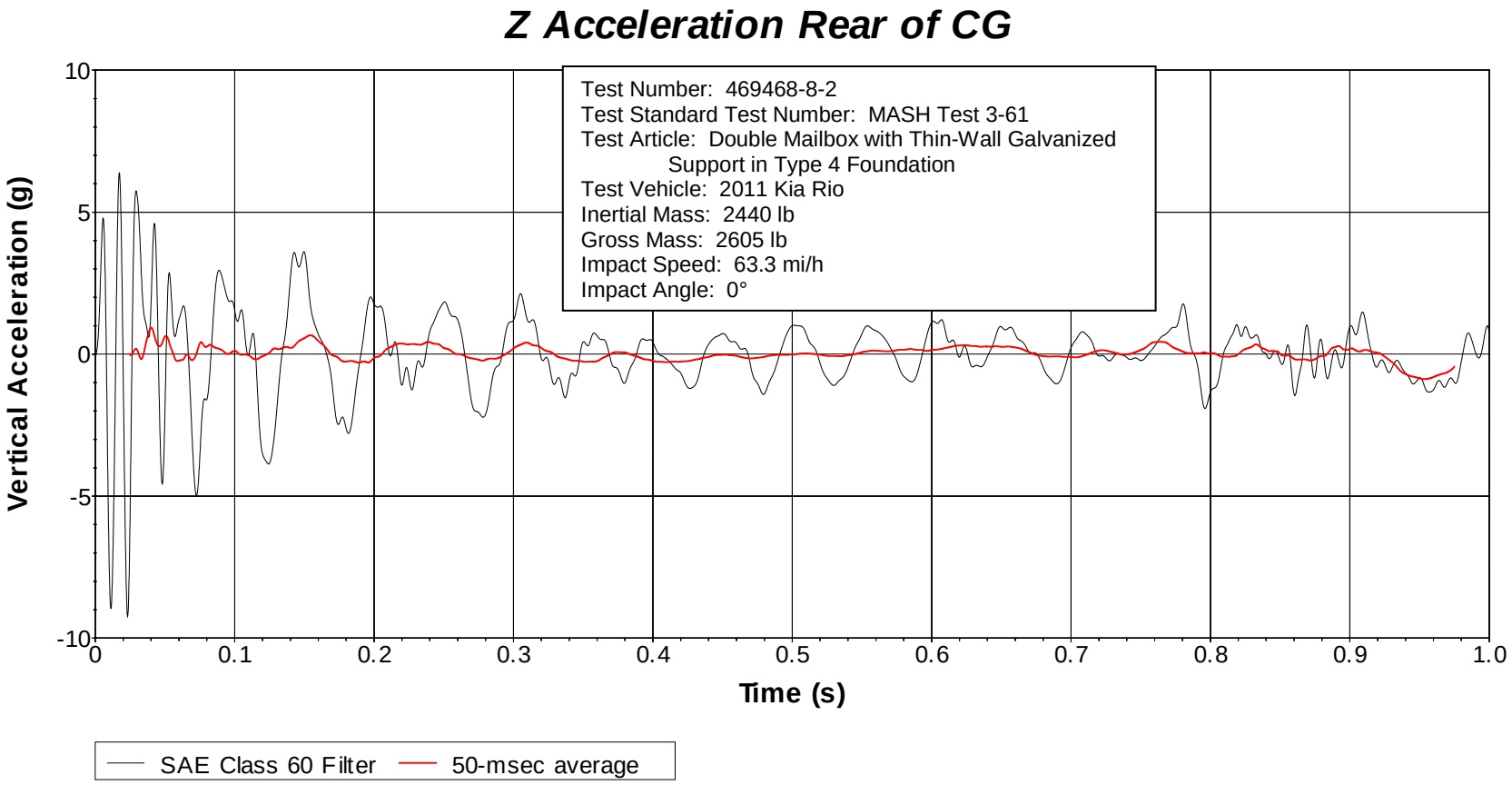

Figure H.16. Vehicle Vertical Accelerometer Trace for Test No. 469468-8-1 (Accelerometer Located Rear of Center of Gravity).

H.3 *MASH* TEST 3-61 ON MULTIPLE MAILBOXES WITH MULTI-HANGER SUPPORT IN TYPE 4 FOUNDATION

H.3.1 Test Article Details

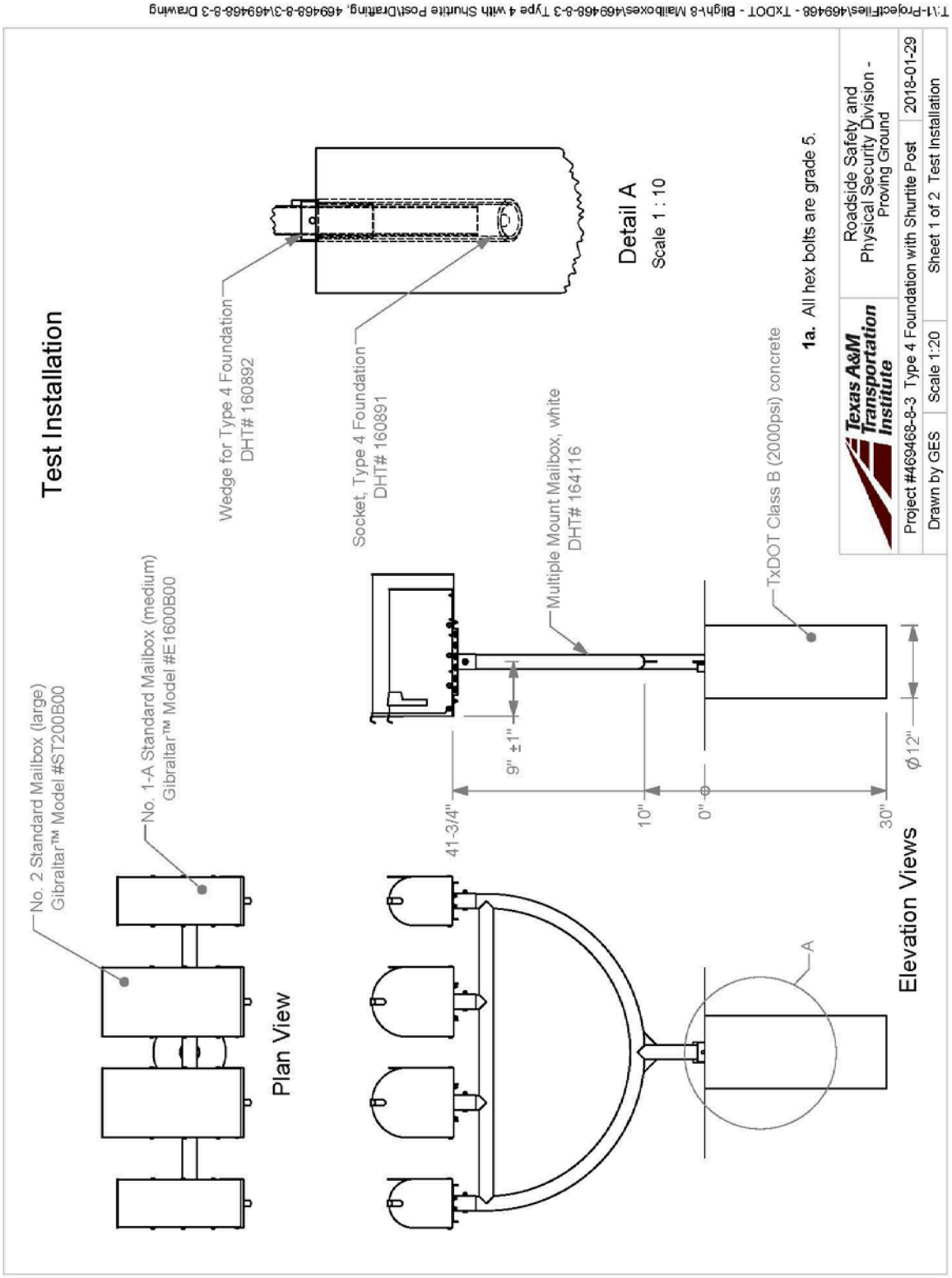

Mailbox Connection Details
Typical both sizes unless otherwise indicated
No. 2 Standard Mailbox (large)
Gibraltar™ Model #ST200B00
15"H x 11-3/4"W x 24-3/4"L, 11.5 lbs.
No. 1-A Standard Mailbox (medium)
Gibraltar™ Model #E1600B00
11"H x 8-1/2"W x 21-1/4"L, 7 lbs.
Bolt, 1/4 x 3/4" hex (x 3 each side)
with Hex Nut and two USS Flat Washers
Drill holes in Mailbox as needed.
Carriage Bolt, 1/4 x 3/4"
with Hex Nut and USS Flat Washer
x 2 each Bracket Extension
Bracket Extension
DHT# 148938
2 Required per Mailbox
Mailbox Bracket
DHT# 161443
Multiple Mount Mailbox, white
DHT# 164116
Bolt, 5/16 x 3" hex
with Hex Nut and two USS Flat Washers
Texas A&M Transportation Institute
Roadside Safety and Physical Security Division - Proving Ground
Project #469468-8-3 Type 4 Foundation with Shurtite Post
2018-01-29
Drawn by GES
Scale 1:5
Sheet 2 of 2 Mailbox Connection Details
T:\1-ProjectFiles\469468 - TxDOT - Bligh\8 Mailboxes\469468-8-3 Type 4 with Shurtite Post\Drafting, 469468-8-3\469468-8-3 Drawing

Bracket Extension
DHT# 148938
1-1/4"
3/4"
1/4"
0"
11-1/2"
0"
3/8"
5/8"
3-5/8"
Plan View
14"
A
A
Elevation View
Slot, 1/4" x 1" Typ
1-3/4" Typ
Isometric View
3-5/8"
.0703
(15 ga.)
3/4"
15/16"
Section A-A
Scale 1 : 1
Texas A&M Transportation Institute
Roadside Safety and Physical Security Division - Proving Ground
Bracket Extension
2017-09-26
Drawn by GES
Scale 1:2
Sheet 1 of 1
T:\Drafting Department\Solidworks\Standard Parts\Mailbox Parts\Mailbox Part Drawings\1148938

Mailbox Bracket
DHT# 161443
Plan View
Slot, 3/8" x 1-1/8"
Typ x 2
Slot, 5/16" x 2-5/16"
Typ x 4
Isometric View
14"
11"
B
B
1-15/16"
3-7/8"
Slot, 1/4" x 1"
Typ x 6 each side
A
A
∅5/16"
Elevation View
7/8"
6-3/16"
Section B-B
.1094
.0625
∅2-1/2"
Section A-A
Texas A&M Transportation Institute
Roadside Safety and Physical Security Division - Proving Ground
Mailbox Bracket
2018-01-09
Drawn by GES
Scale 1:3
Sheet 1 of 1
T:\Drafting Department\Solidworks\Standard Parts\Mailbox Parts\Mailbox Part Drawings\161443

Multiple Mount Mailbox, white

DHT# 164116

Elevation View

Section A-A

Isometric View

Texas A&M Transportation Institute	Roadside Safety and Physical Security Division - Proving Ground	
Multiple Mount Mailbox, white		2018-01-29
Drawn by GES	Scale 1:10	Sheet 1 of 1

T:\Drafting Department\Solidworks\Standard Parts\Mailbox Parts\Mailbox Part Drawings\164116

H.3.2 Vehicle Properties and Information

Table H.7. Vehicle Properties for Test No. 469468-8-3.

Date: 2018-04-03 Test No.: 469468-8-3 VIN No.: KNADH430B6731342

Year: 2011 Make: KIA Model: RIO

Tire Inflation Pressure: 32 PSI Odometer: 155658 Tire Size: 185/65R14

Describe any damage to the vehicle prior to test: NONE

● Denotes accelerometer location.

NOTES:

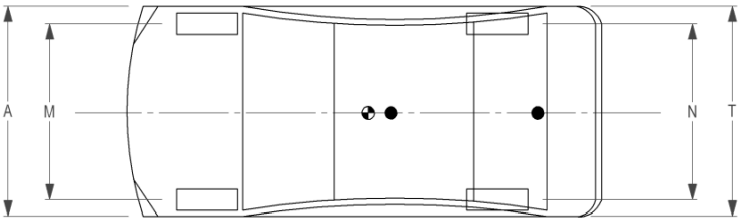

Engine Type: 4 CYL
Engine CID: 1.6 L
Transmission Type:
☑ Auto or ☐ Manual
☑ FWD ☐ RWD ☐ 4WD
Optional Equipment:
NONE

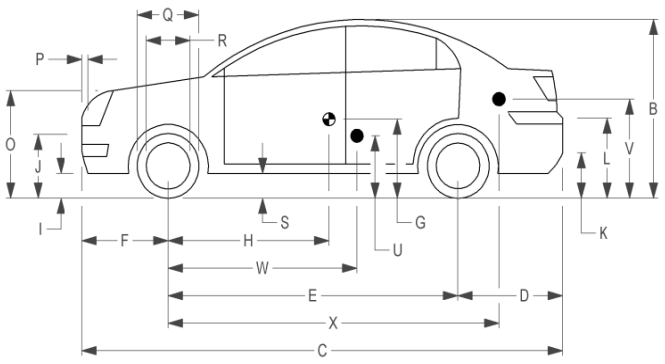

Dummy Data:
Type: 50 PERCENTILE
Mass: 165 LBS
Seat Position: DRIVER SIDE

Geometry: inches

A	66.38	F	33.00	K	12.25	P	4.12	U	15.00		
B	51.50	G		L	25.25	Q	22.50	V	20.75		
C	165.75	H	36.80	M	57.75	R	15.50	W	36.80		
D	34.00	I	7.75	N	57.70	S	8.25	X	107.00		
E	98.75	J	21.50	O	28.25	T	66.20				
	Wheel Center Ht Front		11.00		Wheel Center Ht Rear		11.00	W-H	0.00		

RANGE LIMIT: A = 65 ±3 inches; C = 169 ±8 inches; E = 98 ±5 inches; F = 35 ±4 inches; H = 39 ±4 inches; O = TOP OF RADIATOR SUPPORT ~~(24 ±4inches)~~; M+N/2 = 56 ±2 inches; W-H < 2 inches or use MASH Paragraph A4.3.2

GVWR Ratings:		**Mass:** lb	Curb	Test Inertial	Gross Static
Front	1718	M_{front}	1580	1530	1615
Back	1874	M_{rear}	875	910	990
Total	3638	M_{Total}	2455	2440	2605

Allowable TIM = 2420 lb ±55 lb | Allowable GSM = 2585 lb ± 55 lb

Mass Distribution:
lb LF: 780 RF: 750 LR: 430 RR: 480

Table H.8. Exterior Crush Measurements of Vehicle for Test No. 469468-8-3.

Date: 2018-04-03 Test No.: 469468-8-3 VIN No.: KNADH430B6731342

Year: 2011 Make: KIA Model: RIO

VEHICLE CRUSH MEASUREMENT SHEET[1]

Complete When Applicable	
End Damage	Side Damage
Undeformed end width _____	Bowing: B1 _____ X1 _____
Corner shift: A1 _____	B2 _____ X2 _____
A2 _____	
End shift at frame (CDC)	Bowing constant
(check one)	$\frac{X1+X2}{2} =$ _____
< 4 inches _____	
≥ 4 inches _____	

Note: Measure C_1 to C_6 from Driver to Passenger Side in Front or Rear impacts – Rear to Front in Side Impacts.

Specific Impact Number	Plane* of C-Measurements	Direct Damage		Field L**	C_1	C_2	C_3	C_4	C_5	C_6	±D
		Width** (CDC)	Max*** Crush								
1	Windshield	34	1.8	24	–	--	--	--	--	–	--
	Units in inches										

[1]Table taken from National Accident Sampling System (NASS).

*Identify the plane at which the C-measurements are taken (e.g., at bumper, above bumper, at sill, above sill, at beltline, etc.) or label adjustments (e.g., free space).

Free space value is defined as the distance between the baseline and the original body contour taken at the individual C locations. This may include the following: bumper lead, bumper taper, side protrusion, side taper, etc. Record the value for each C-measurement and maximum crush.

**Measure and document on the vehicle diagram the beginning or end of the direct damage width and field L (e.g., side damage with respect to undamaged axle).

***Measure and document on the vehicle diagram the location of the maximum crush.

Note: Use as many lines/columns as necessary to describe each damage profile.

Table H.9. Occupant Compartment Measurements of Vehicle for Test No. 469468-8-1.

Date:	2018-04-03	Test No.:	469468-8-3	VIN No.:	KNADH430B6731342
Year:	2011	Make:	KIA	Model:	RIO

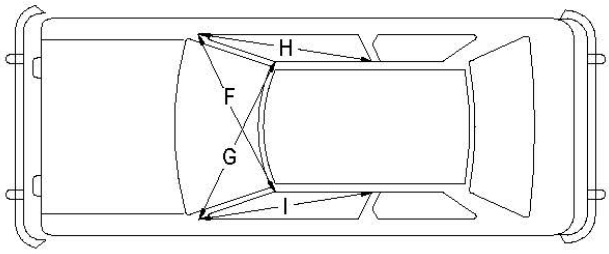

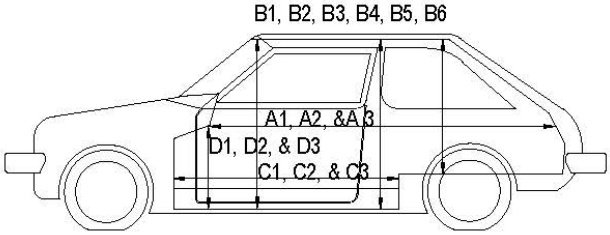

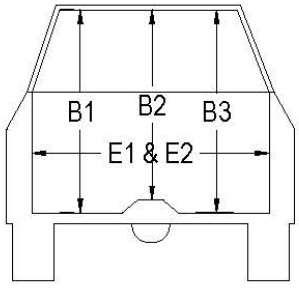

OCCUPANT COMPARTMENT DEFORMATION MEASUREMENT

	Before	After	Differ.
	inches		
A1	67.50	67.50	0.00
A2	67.25	67.25	0.00
A3	67.75	67.75	0.00
B1	40.50	40.50	0.00
B2	39.00	39.00	0.00
B3	40.50	40.50	0.00
B4	36.25	36.25	0.00
B5	36.00	36.00	0.00
B6	36.25	36.25	0.00
C1	26.00	26.00	0.00
C2	0.00	0.00	0.00
C3	26.00	26.00	0.00
D1	9.50	9.50	0.00
D2	0.00	0.00	0.00
D3	9.50	9.50	0.00
E1	51.50	51.50	0.00
E2	51.00	51.00	0.00
F	51.00	51.00	0.00
G	51.00	51.00	0.00
H	37.50	37.50	0.00
I	37.50	37.50	0.00
J*	51.00	51.00	0.00

*Lateral area across the cab from
driver's side kickpanel to passenger's side kickpanel.

H.3.3 Sequential Photographs

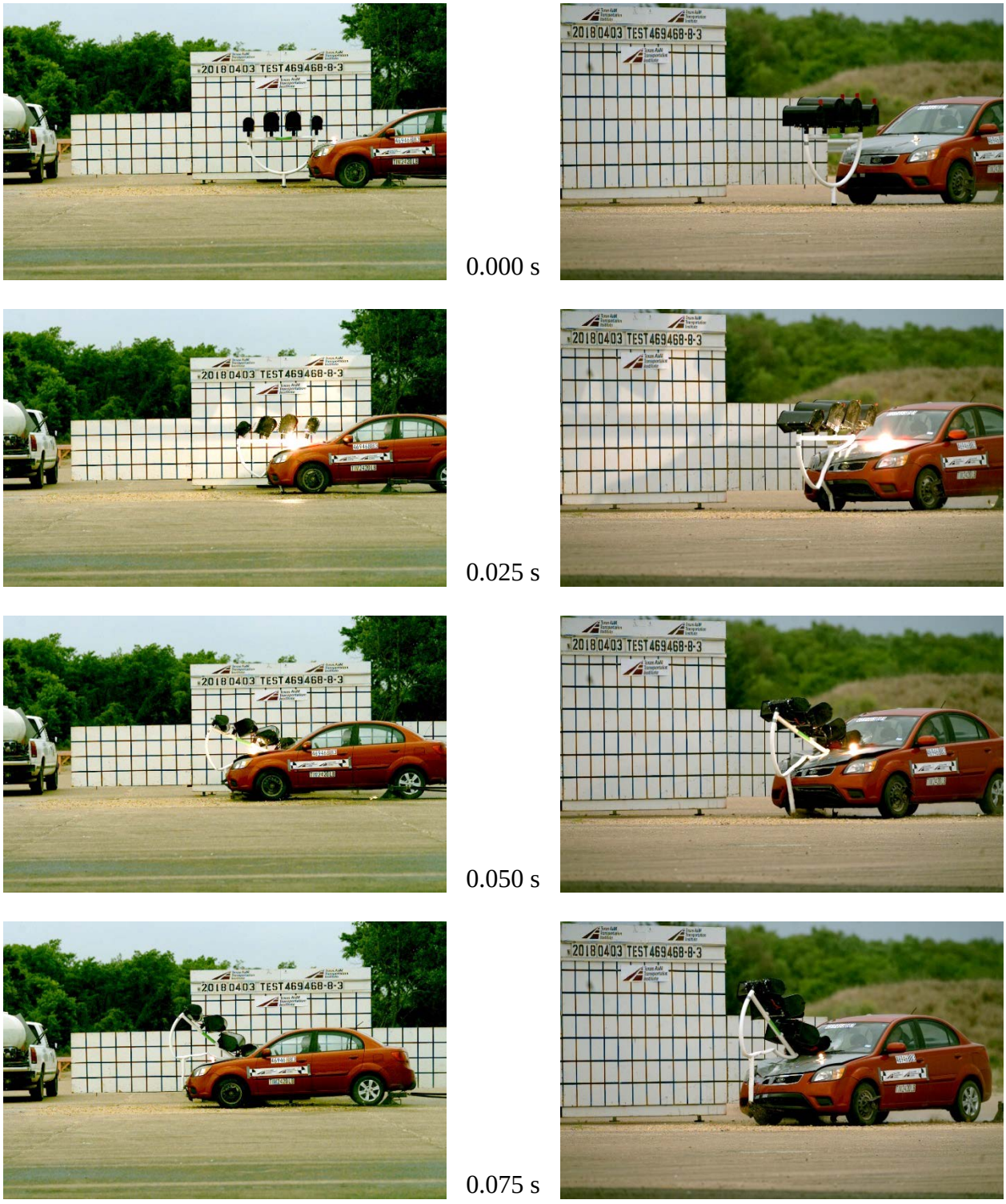

Figure H.17. Sequential Photographs for Test No. 469468-8-3 (Perpendicular and Oblique Views).



Figure H.17. Sequential Photographs for Test No. 469468-8-3 (Perpendicular and Oblique Views) (Continued).

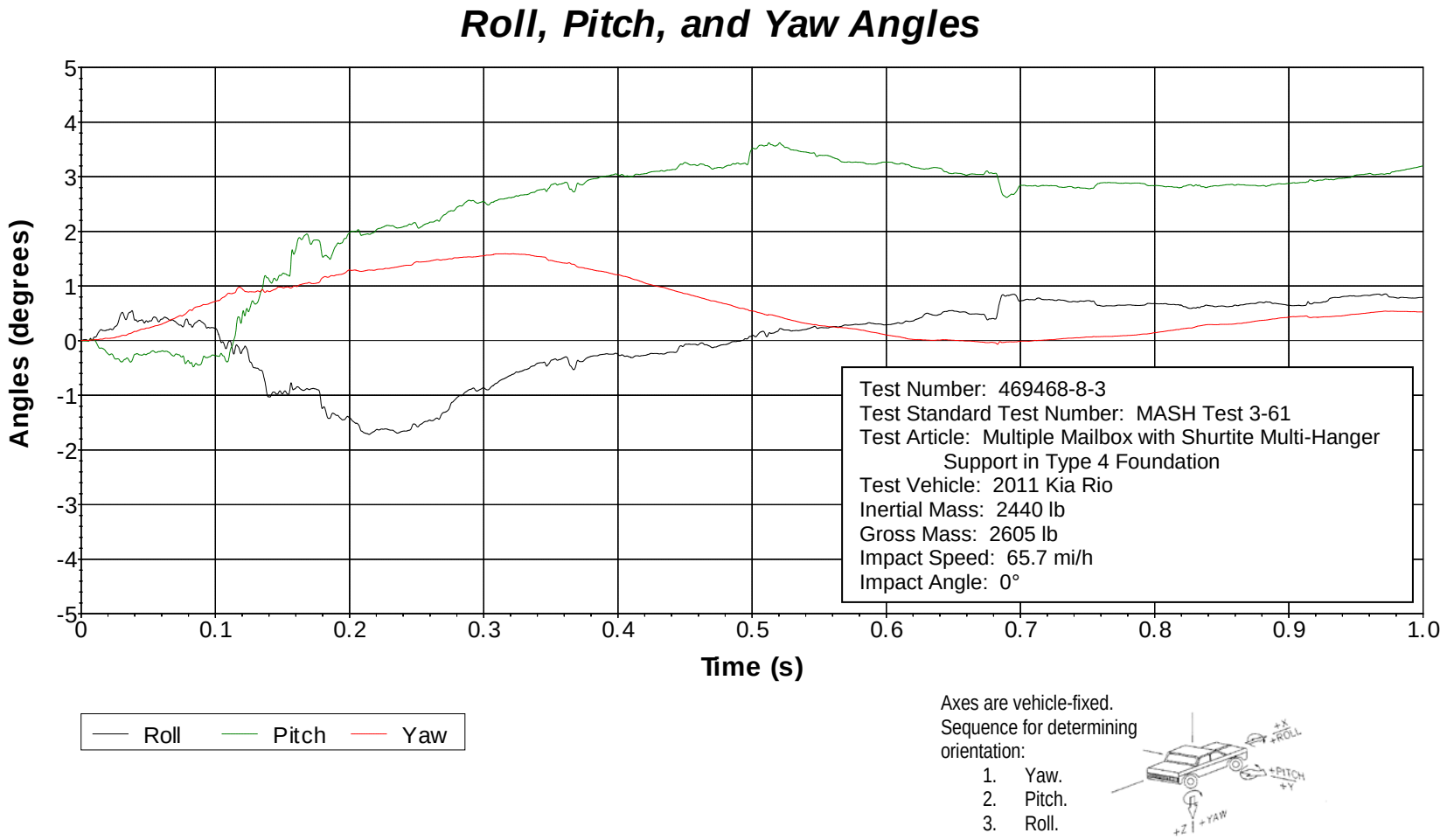

Figure H.18. Vehicle Angular Displacements for Test No. 469468-8-3.

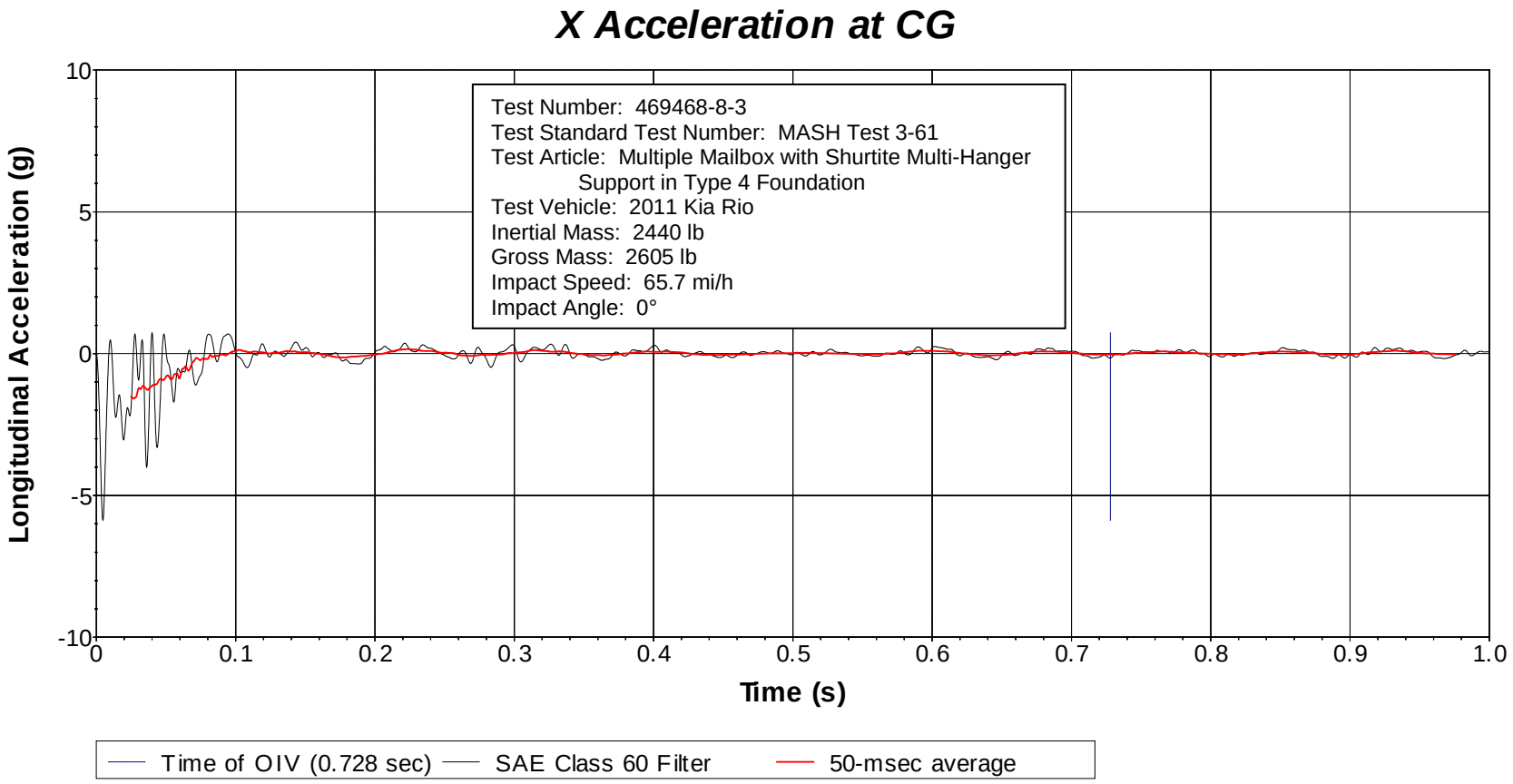

Figure H.19. Vehicle Longitudinal Accelerometer Trace for Test No. 469468-8-3 (Accelerometer Located at Center of Gravity).

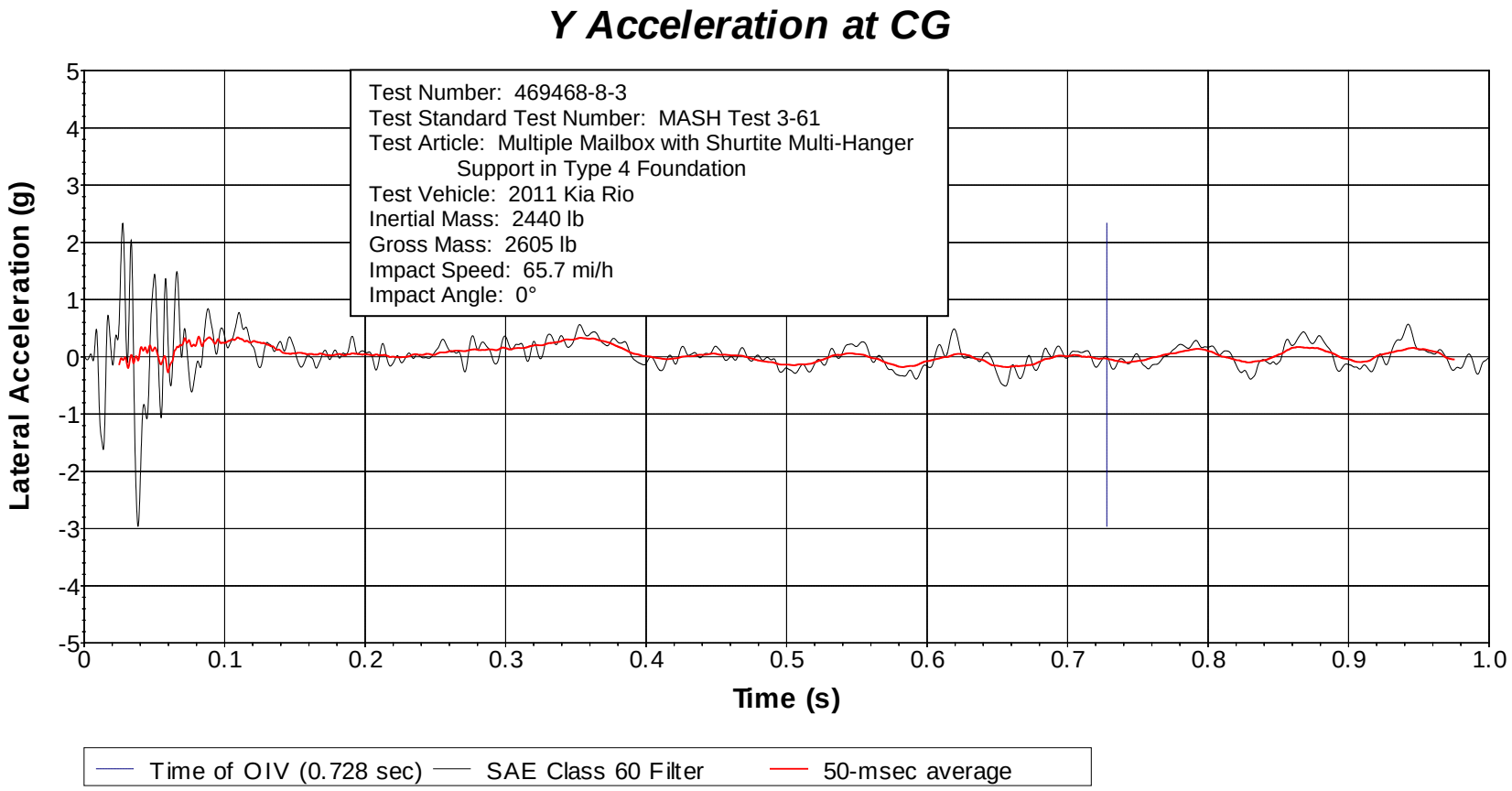

Figure H.20. Vehicle Lateral Accelerometer Trace for Test No. 469468-8-3 (Accelerometer Located at Center of Gravity).

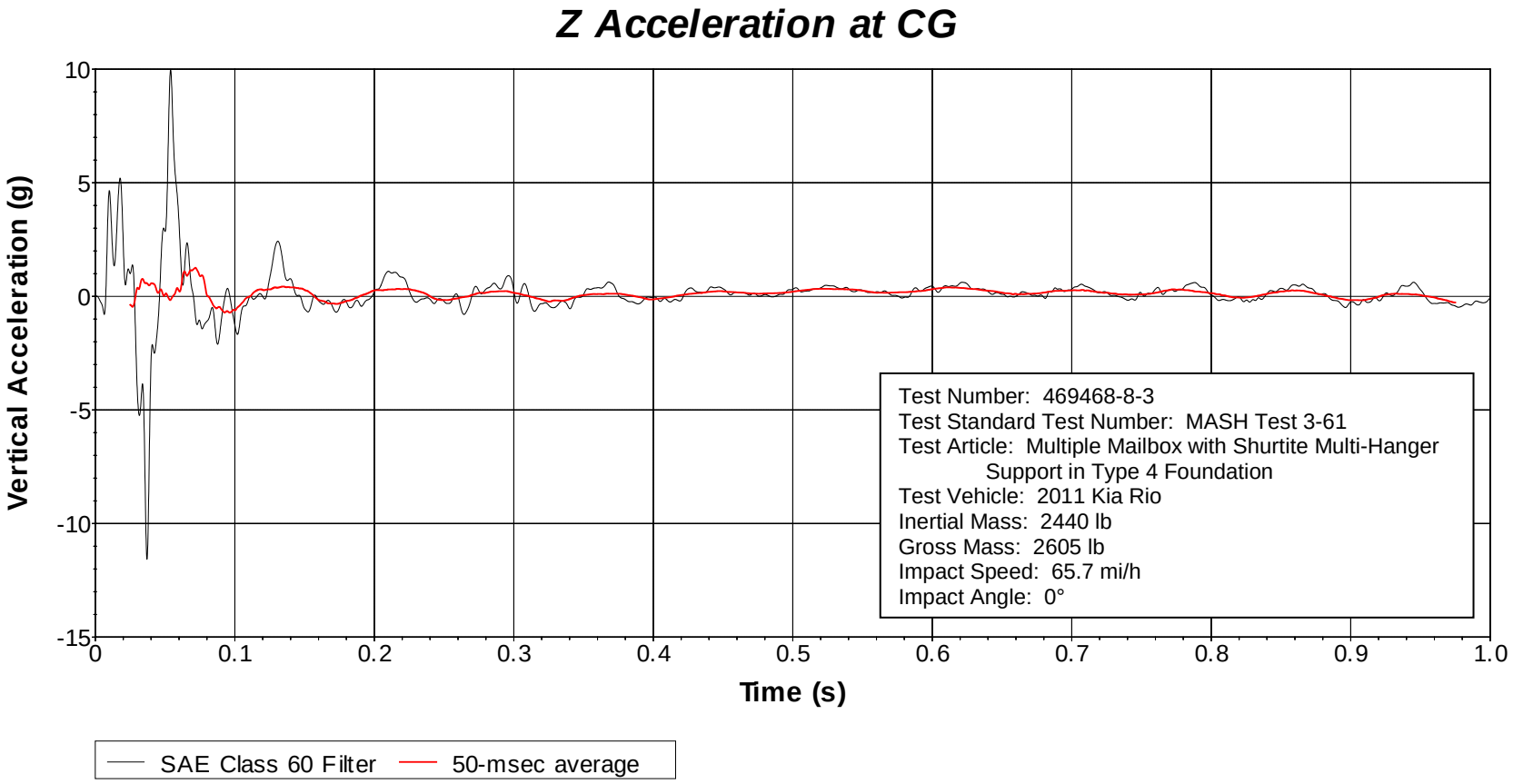

Figure H.21. Vehicle Vertical Accelerometer Trace for Test No. 469468-8-3 (Accelerometer Located at Center of Gravity).

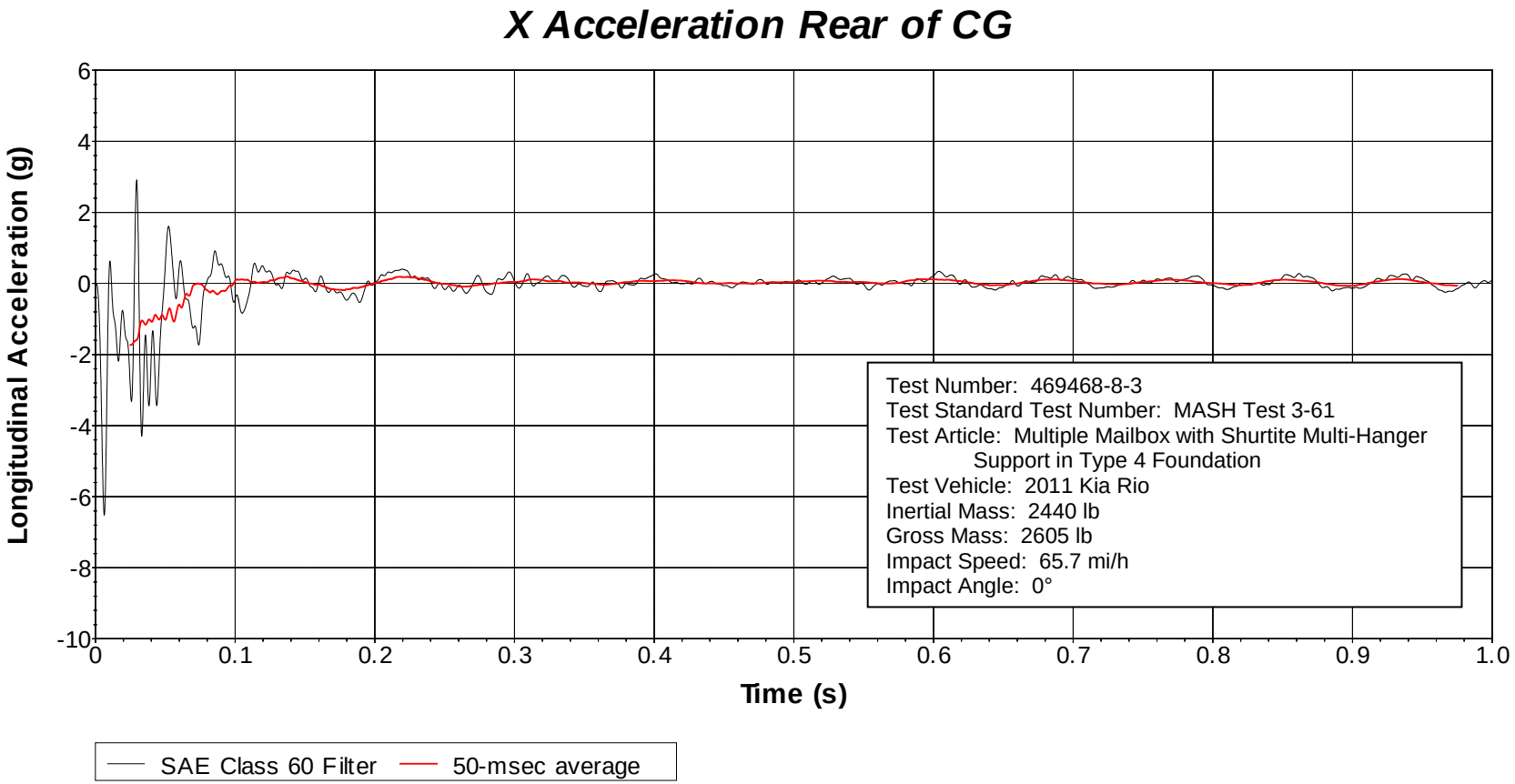

Figure H.22. Vehicle Longitudinal Accelerometer Trace for Test No. 469468-8-3 (Accelerometer Located Rear of Center of Gravity).

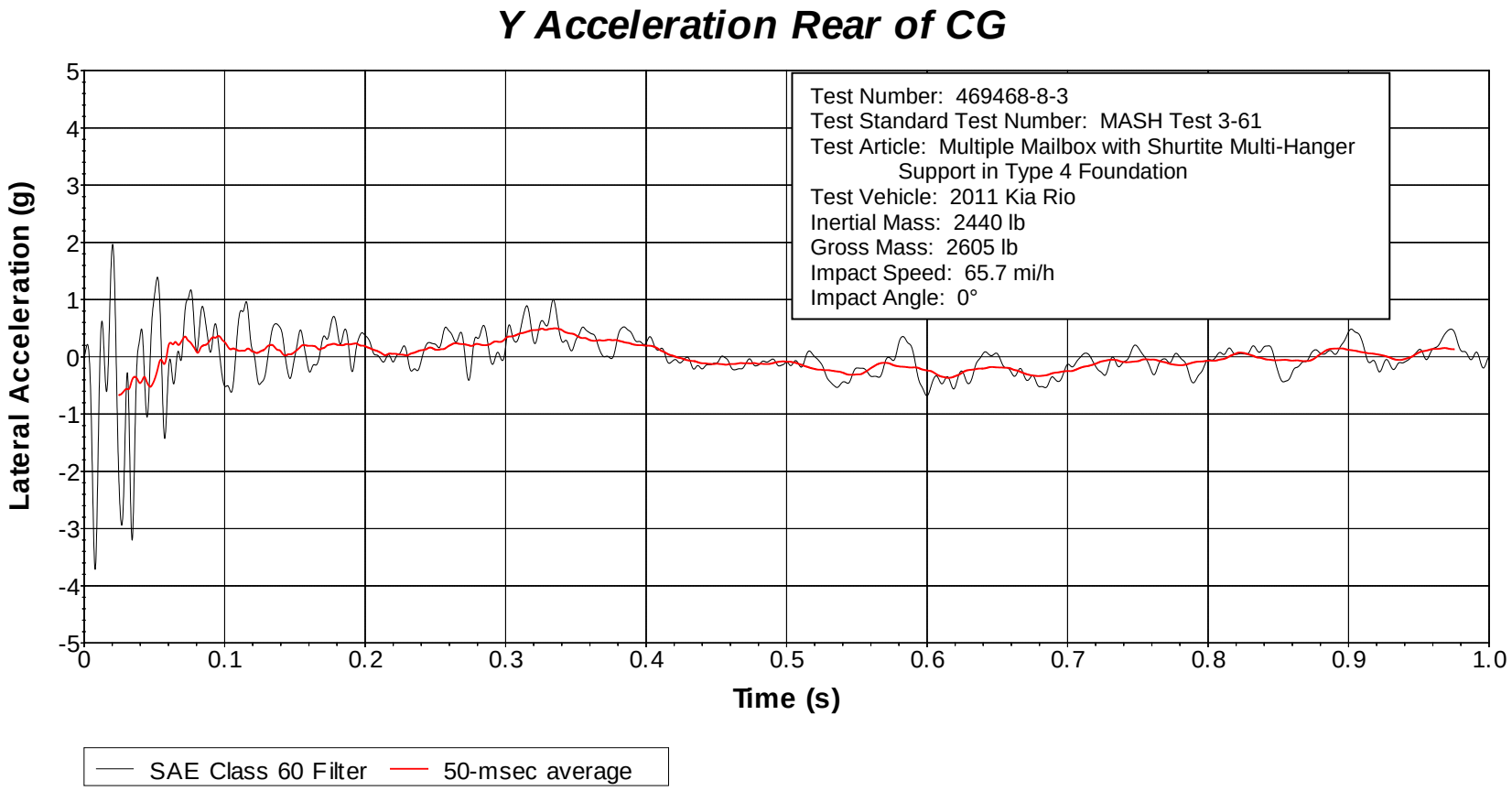

Figure H.23. Vehicle Lateral Accelerometer Trace for Test No. 469468-8-1 (Accelerometer Located Rear of Center of Gravity).

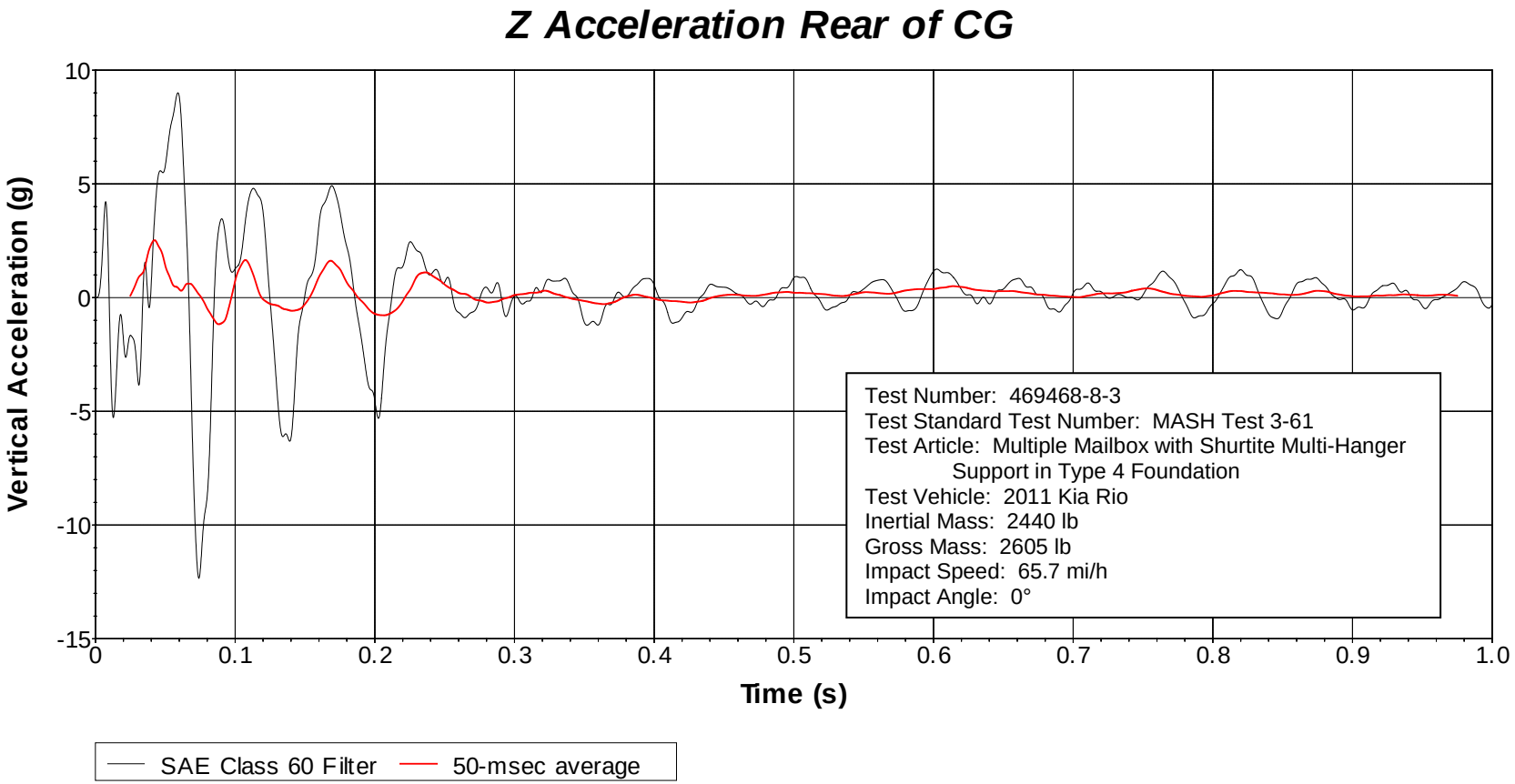

Figure H.24. Vehicle Vertical Accelerometer Trace for Test No. 469468-8-3 (Accelerometer Located Rear of Center of Gravity).

H.4 *MASH* TEST 3-61 ON SINGLE MOLDED PLASTIC MAILMASTER® MAILBOX WITH WOOD SUPPORT IN TYPE 5 FOUNDATION

H.4.1 Test Article Details

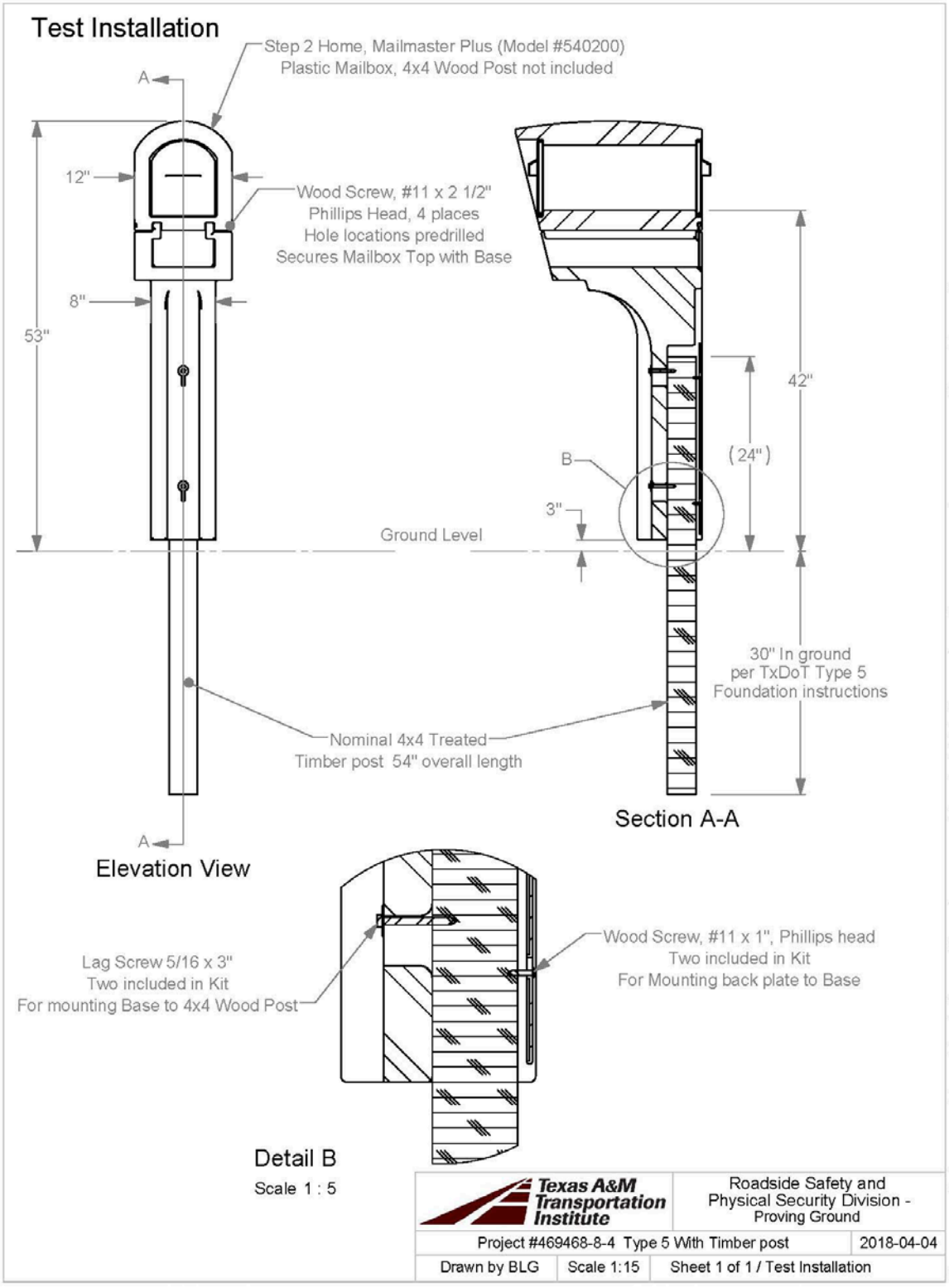

H.4.2 Vehicle Properties and Information

Table H.10. Vehicle Properties for Test No. 469468-8-4.

Date: 2018-04-04 Test No.: 469468-8-4 VIN No.: KNADH4A37B6864745

Year: 2011 Make: KIA Model: RIO

Tire Inflation Pressure: 32 PSI Odometer: 127508 Tire Size: 185/65R14

Describe any damage to the vehicle prior to test: NONE

● Denotes accelerometer location.

NOTES:

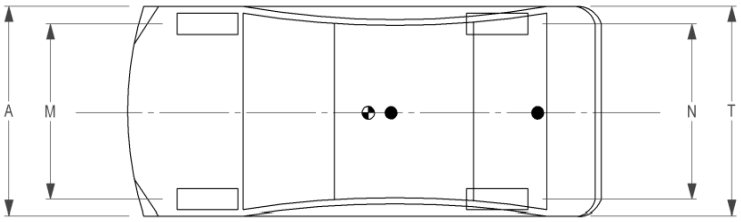

Engine Type: 4 CYL
Engine CID: 1.6 L
Transmission Type:
☑ Auto or ☐ Manual
☑ FWD ☐ RWD ☐ 4WD
Optional Equipment:
NONE

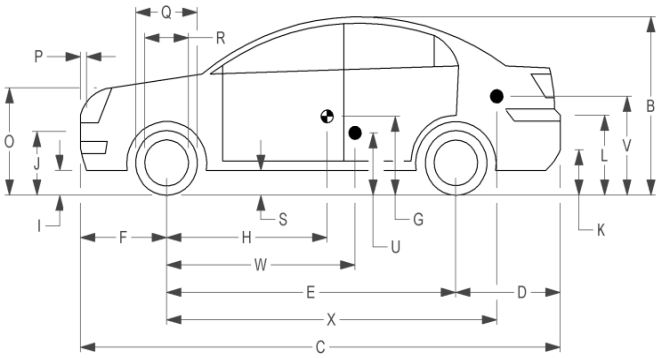

Dummy Data:
Type: 50 PERCENTILE
Mass: 165 LBS
Seat Position: DRIVER SIDE

Geometry: inches

A	66.38	F	33.00	K	12.25	P	4.12	U	15.00		
B	51.50	G		L	25.25	Q	22.50	V	20.75		
C	165.75	H	35.60	M	57.75	R	15.50	W	35.60		
D	34.00	I	7.75	N	57.70	S	8.25	X	106.00		
E	98.75	J	21.50	O	28.25	T	66.20				
	Wheel Center Ht Front		11.00		Wheel Center Ht Rear		11.00	W-H	0.00		

RANGE LIMIT: A = 65 ±3 inches; C = 169 ±8 inches; E = 98 ±5 inches; F = 35 ±4 inches; H = 39 ±4 inches; O = TOP OF RADIATOR SUPPORT ~~(24 ±4inches)~~, M+N/2 = 56 ±2 inches; W-H < 2 inches or use MASH Paragraph A4.3.2

GVWR Ratings:		**Mass:** lb	Curb	Test Inertial	Gross Static
Front	1718	M_{front}	1579	1555	1640
Back	1874	M_{rear}	887	878	958
Total	3638	M_{Total}	2466	2433	2598

Allowable TIM = 2420 lb ±55 lb | Allowable GSM = 2585 lb ± 55 lb

Mass Distribution:
lb LF: 777 RF: 778 LR: 417 RR: 461

Table H.11. Exterior Crush Measurements of Vehicle for Test No. 469468-8-4.

Date: 2018-04-04 Test No.: 469468-8-4 VIN No.: KNADH4A37B6864745

Year: 2011 Make: KIA Model: RIO

VEHICLE CRUSH MEASUREMENT SHEET[1]

Complete When Applicable	
End Damage	Side Damage
Undeformed end width _____	Bowing: B1 _____ X1 _____
Corner shift: A1 _____	B2 _____ X2 _____
A2 _____	
End shift at frame (CDC)	Bowing constant
(check one)	$\frac{X1+X2}{2}$ = _____
< 4 inches _____	
≥ 4 inches _____	

Note: Measure C_1 to C_6 from Driver to Passenger Side in Front or Rear impacts – Rear to Front in Side Impacts.

Specific Impact Number	Plane* of C-Measurements	Direct Damage		Field L**	C_1	C_2	C_3	C_4	C_5	C_6	±D
		Width** (CDC)	Max*** Crush								
	Windshield	32	1-7/8	27	–	--	--	--	--	–	--
	Units in inches										

[1]Table taken from National Accident Sampling System (NASS).

*Identify the plane at which the C-measurements are taken (e.g., at bumper, above bumper, at sill, above sill, at beltline, etc.) or label adjustments (e.g., free space).

Free space value is defined as the distance between the baseline and the original body contour taken at the individual C locations. This may include the following: bumper lead, bumper taper, side protrusion, side taper, etc. Record the value for each C-measurement and maximum crush.

**Measure and document on the vehicle diagram the beginning or end of the direct damage width and field L (e.g., side damage with respect to undamaged axle).

***Measure and document on the vehicle diagram the location of the maximum crush.

Note: Use as many lines/columns as necessary to describe each damage profile.

Table H.12. Occupant Compartment Measurements of Vehicle for Test No. 469468-8-4.

Date:	2018-01-24	Test No.:	690900-HSI7	VIN No.:	KNADH4A38A6627535
Year:	2010	Make:	KIA	Model:	RIO

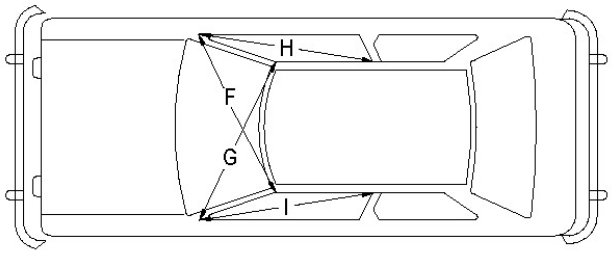

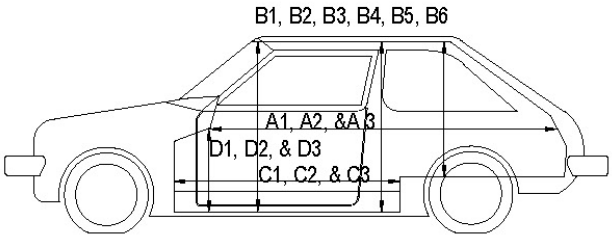

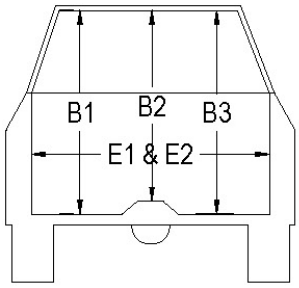

OCCUPANT COMPARTMENT DEFORMATION MEASUREMENT

	Before	After	Differ.
	inches		
A1	67.50	67.50	0.25
A2	67.25	67.25	0.00
A3	67.75	67.75	0.00
B1	40.50	40.50	0.00
B2	39.00	39.00	0.00
B3	40.50	40.50	0.00
B4	36.25	36.25	0.00
B5	36.00	36.00	0.00
B6	36.25	36.25	0.00
C1	26.00	26.00	0.00
C2	0.00	0.00	0.00
C3	26.00	26.00	0.00
D1	9.50	9.50	0.00
D2	0.00	0.00	0.00
D3	9.50	9.50	0.00
E1	51.50	51.50	0.00
E2	51.00	51.00	0.00
F	51.00	51.00	0.00
G	51.00	51.00	0.00
H	37.50	37.50	0.00
I	37.50	37.50	0.00
J*	51.00	51.00	0.00

*Lateral area across the cab from driver's side kickpanel to passenger's side kickpanel.

H.4.3 Sequential Photographs

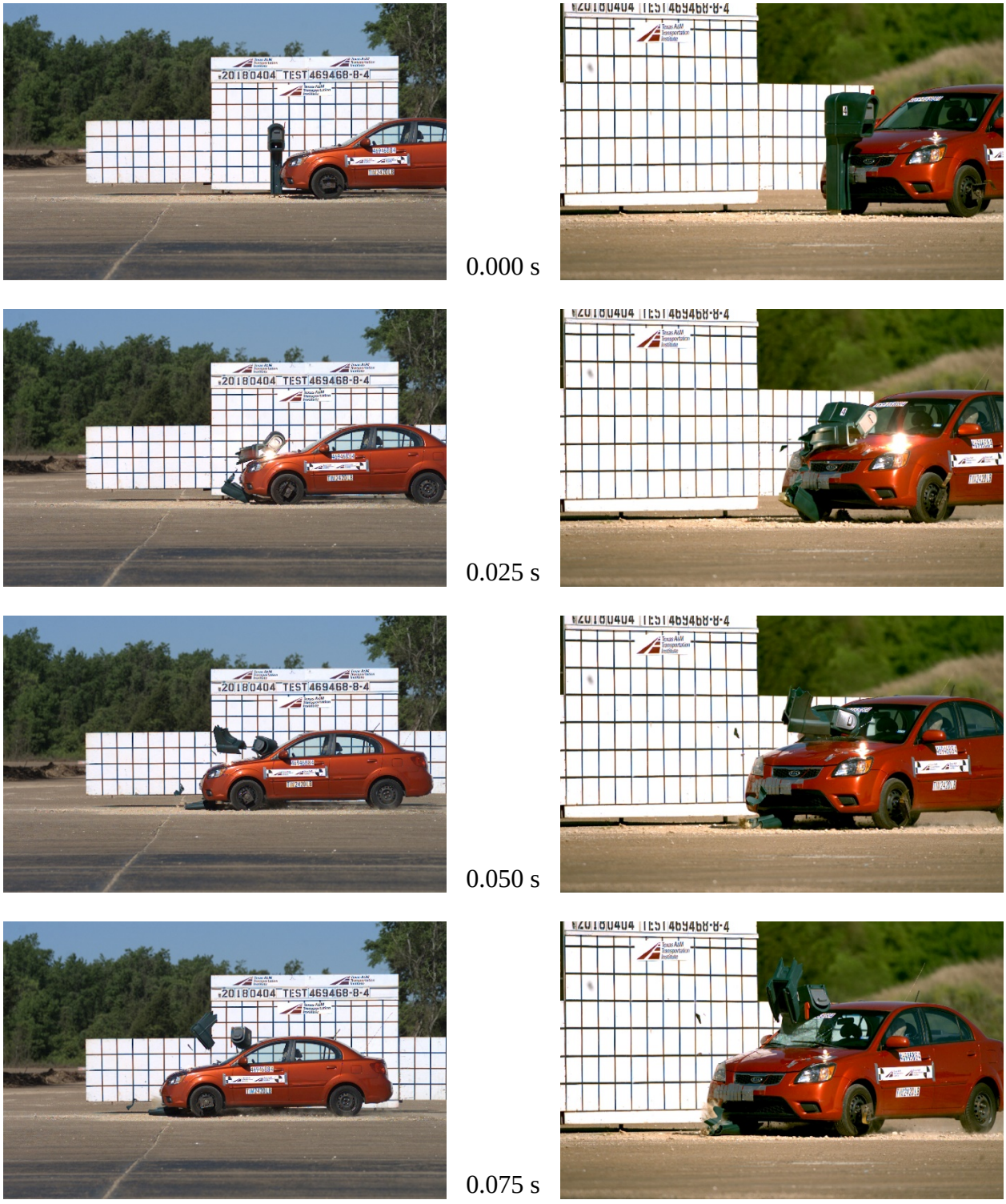

Figure H.25. Sequential Photographs for Test No. 469468-8-4 (Perpendicular and Oblique Views).

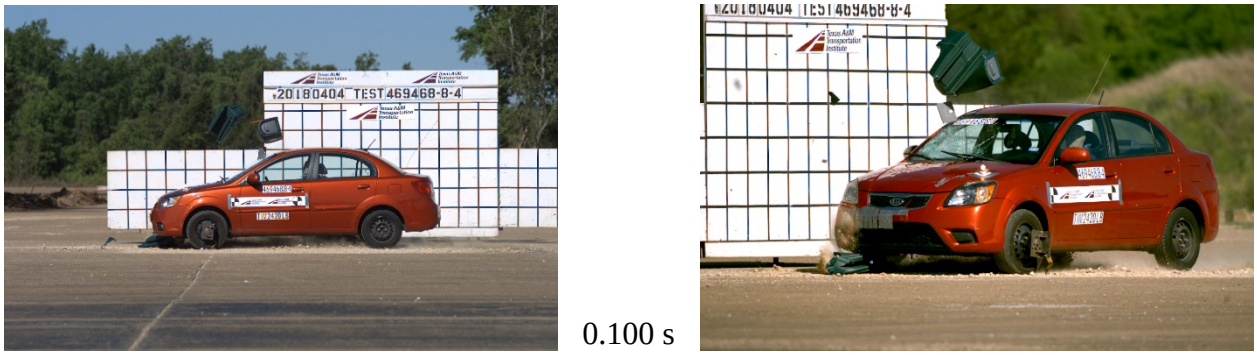

0.100 s



0.125 s



0.150 s



0.175 s

Figure H.25. Sequential Photographs for Test No. 469468-8-4 (Perpendicular and Oblique Views) (Continued).

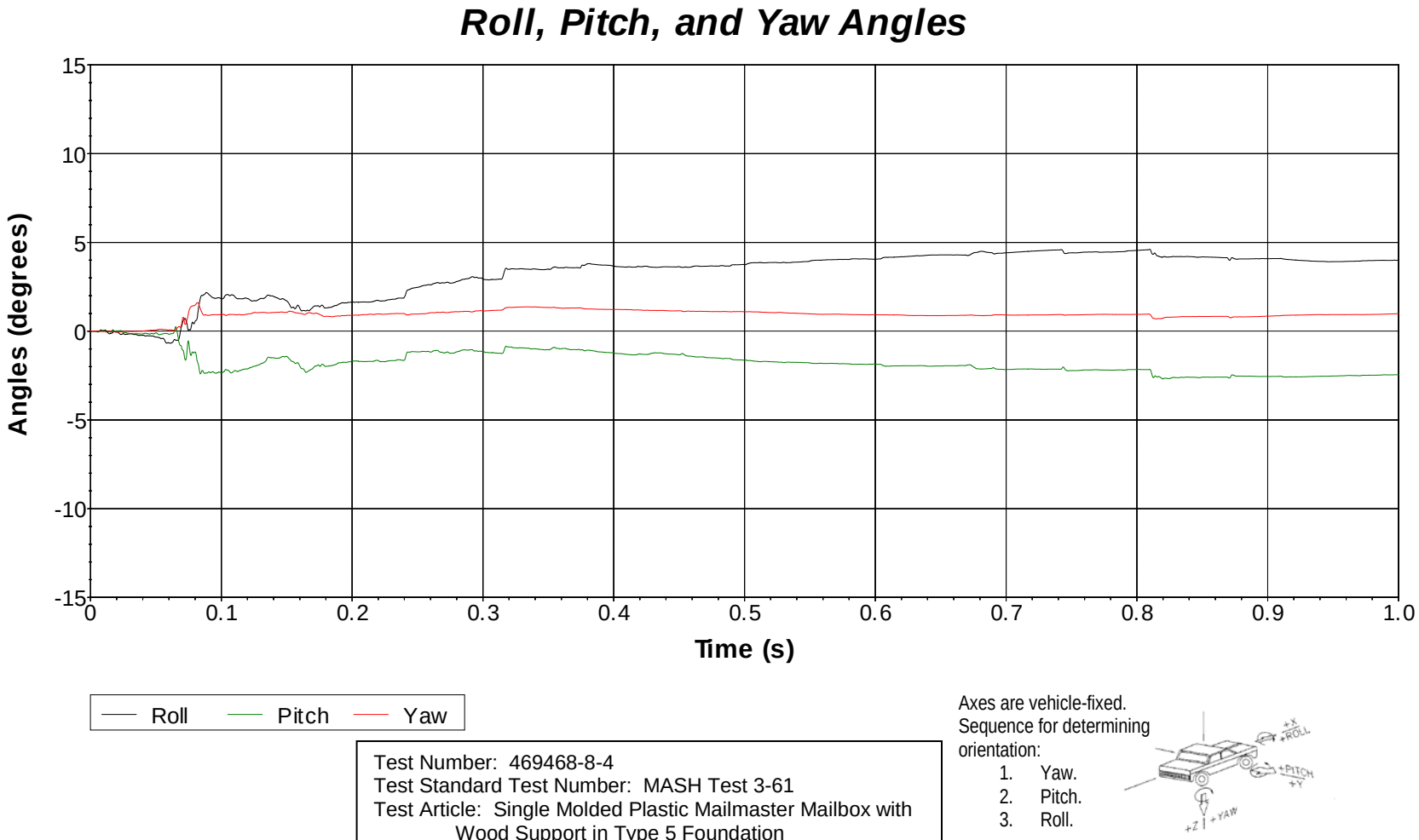

Figure H.26. Vehicle Angular Displacements for Test No. 469468-8-4.

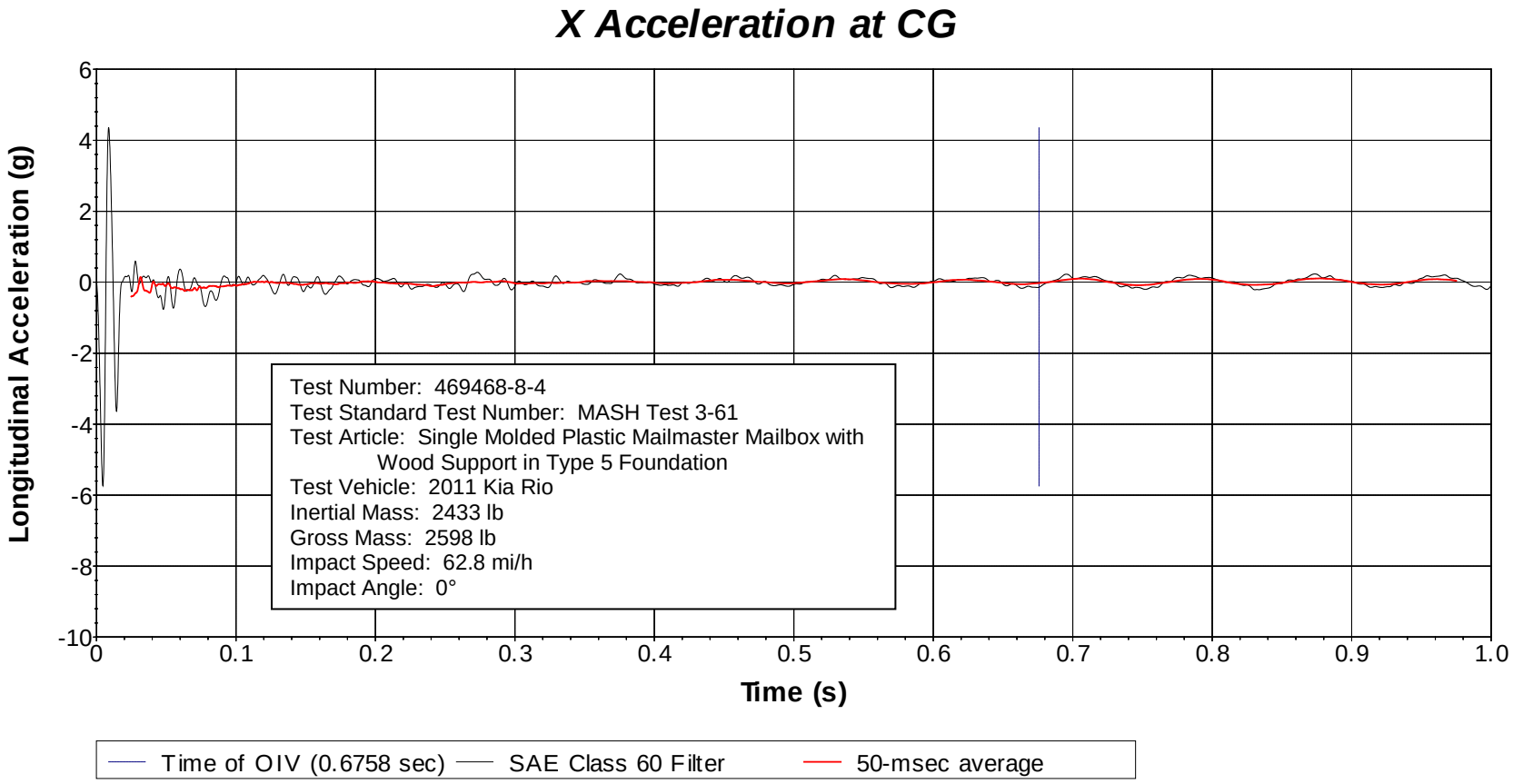

Figure H.27. Vehicle Longitudinal Accelerometer Trace for Test No. 469468-8-4 (Accelerometer Located at Center of Gravity).

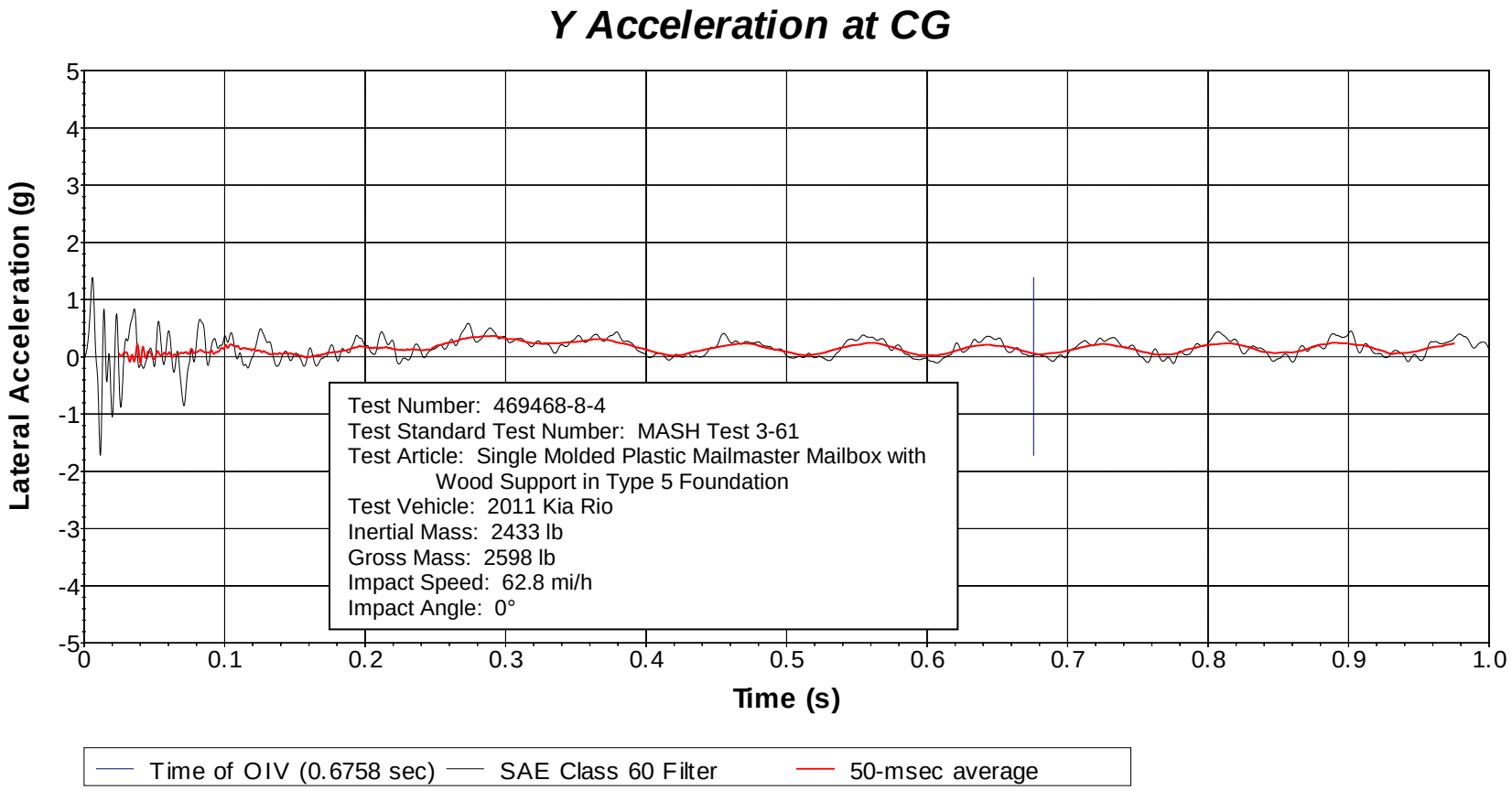

Figure H.28. Vehicle Lateral Accelerometer Trace for Test No. 469468-8-4 (Accelerometer Located at Center of Gravity).

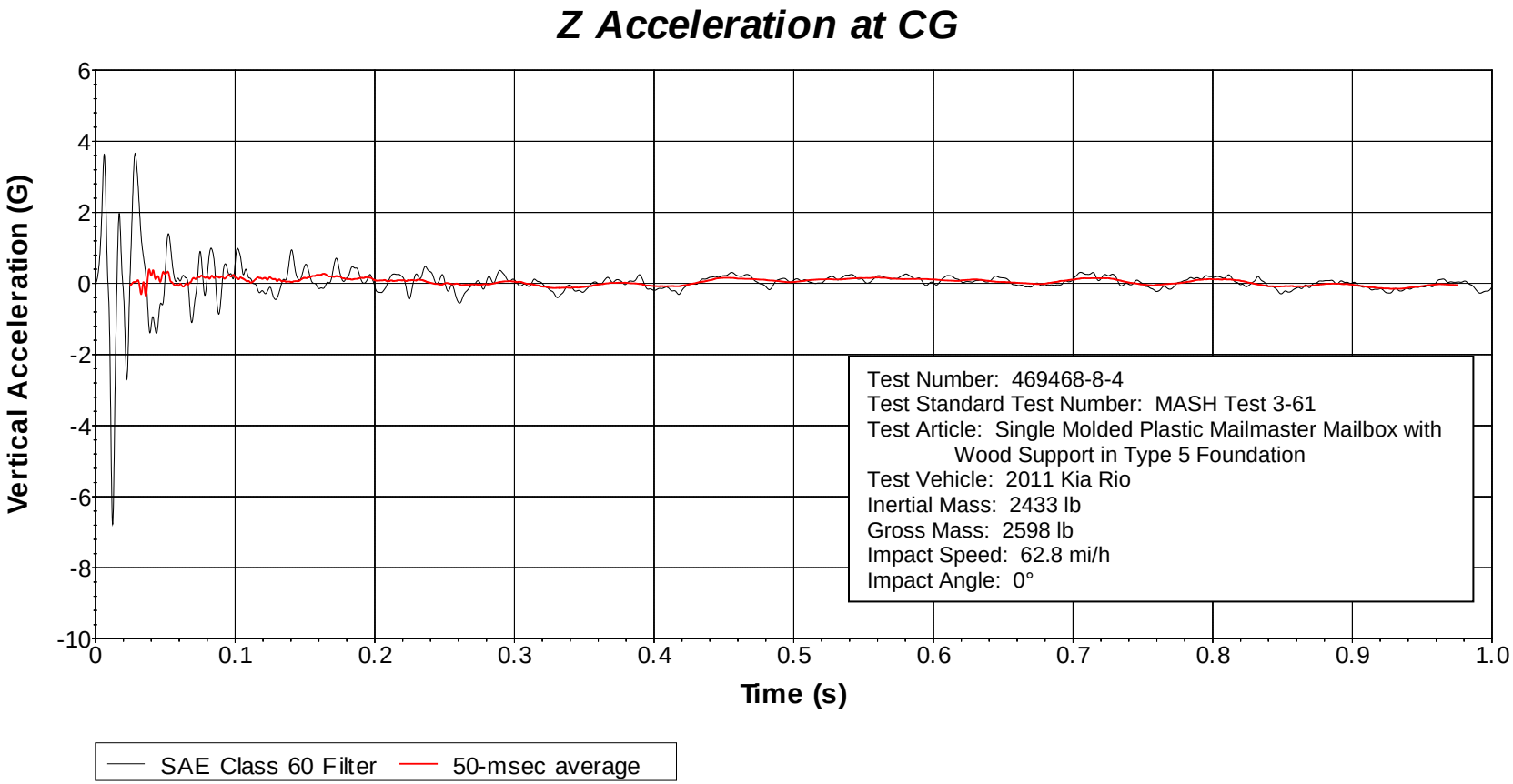

Figure H.29. Vehicle Vertical Accelerometer Trace for Test No. 469468-8-4 (Accelerometer Located at Center of Gravity).

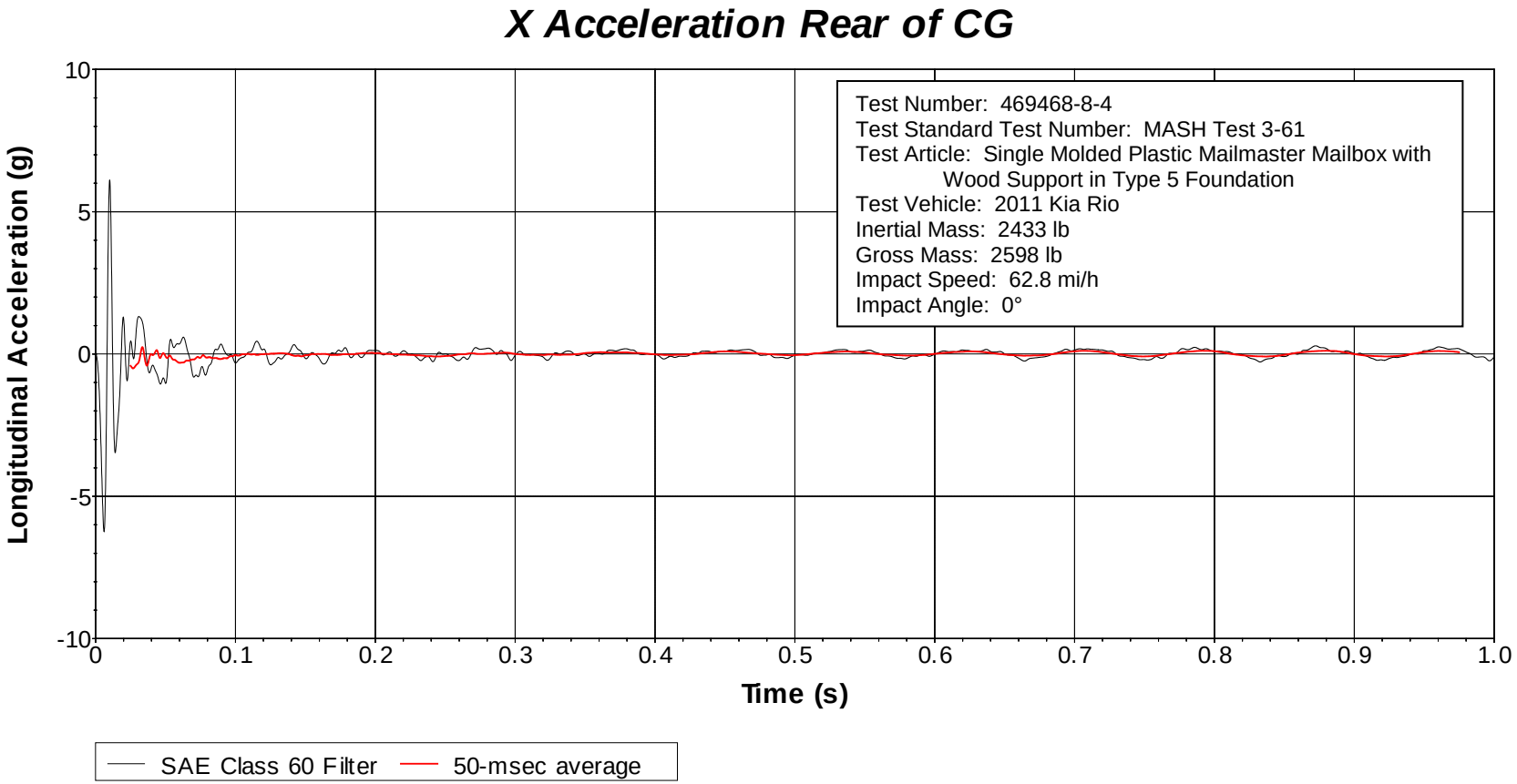

Figure H.30. Vehicle Longitudinal Accelerometer Trace for Test No. 469468-8-4 (Accelerometer Located Rear of Center of Gravity).

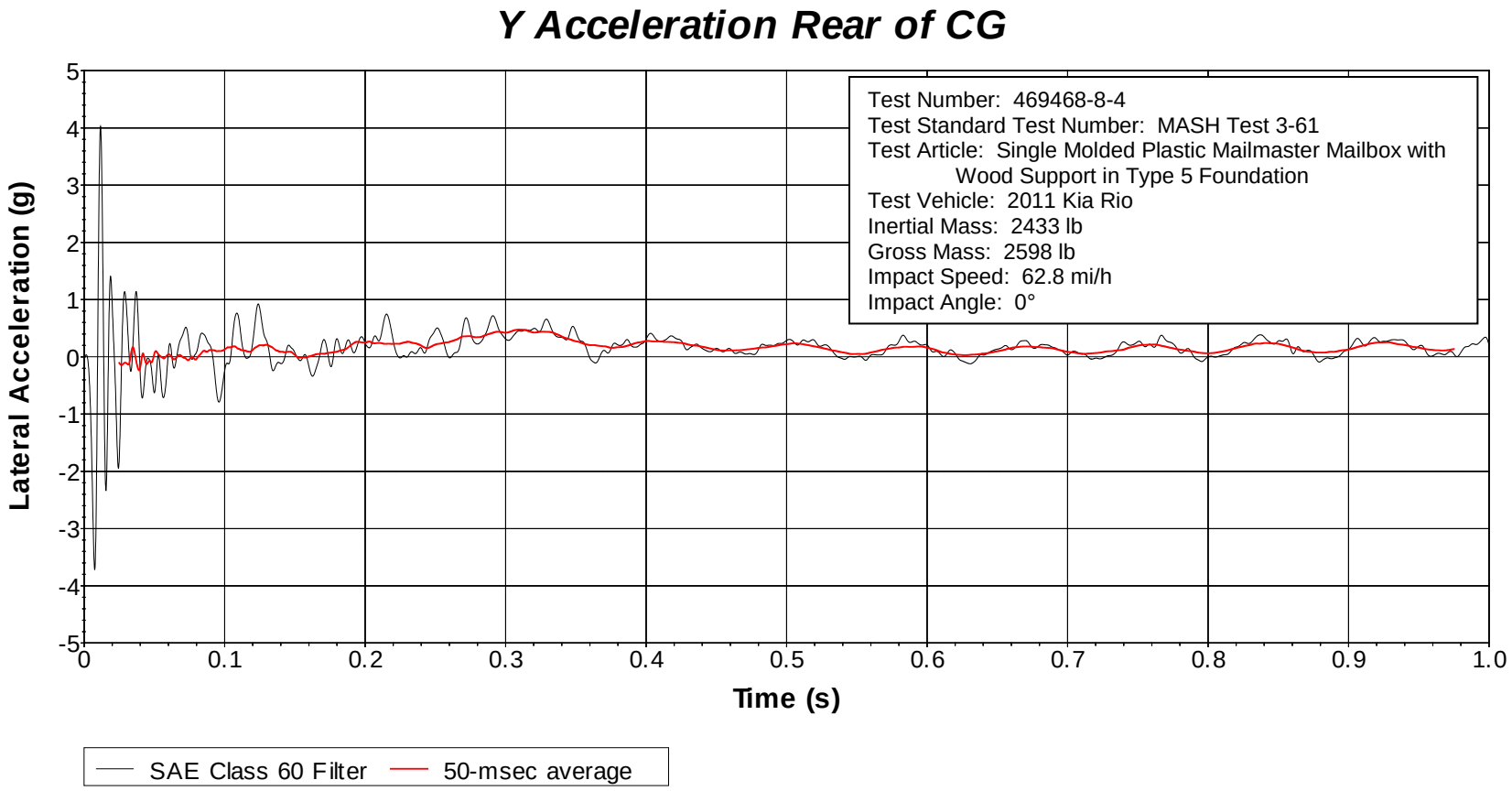

Figure H.31. Vehicle Lateral Accelerometer Trace for Test No. 469468-8-4 (Accelerometer Located Rear of Center of Gravity).

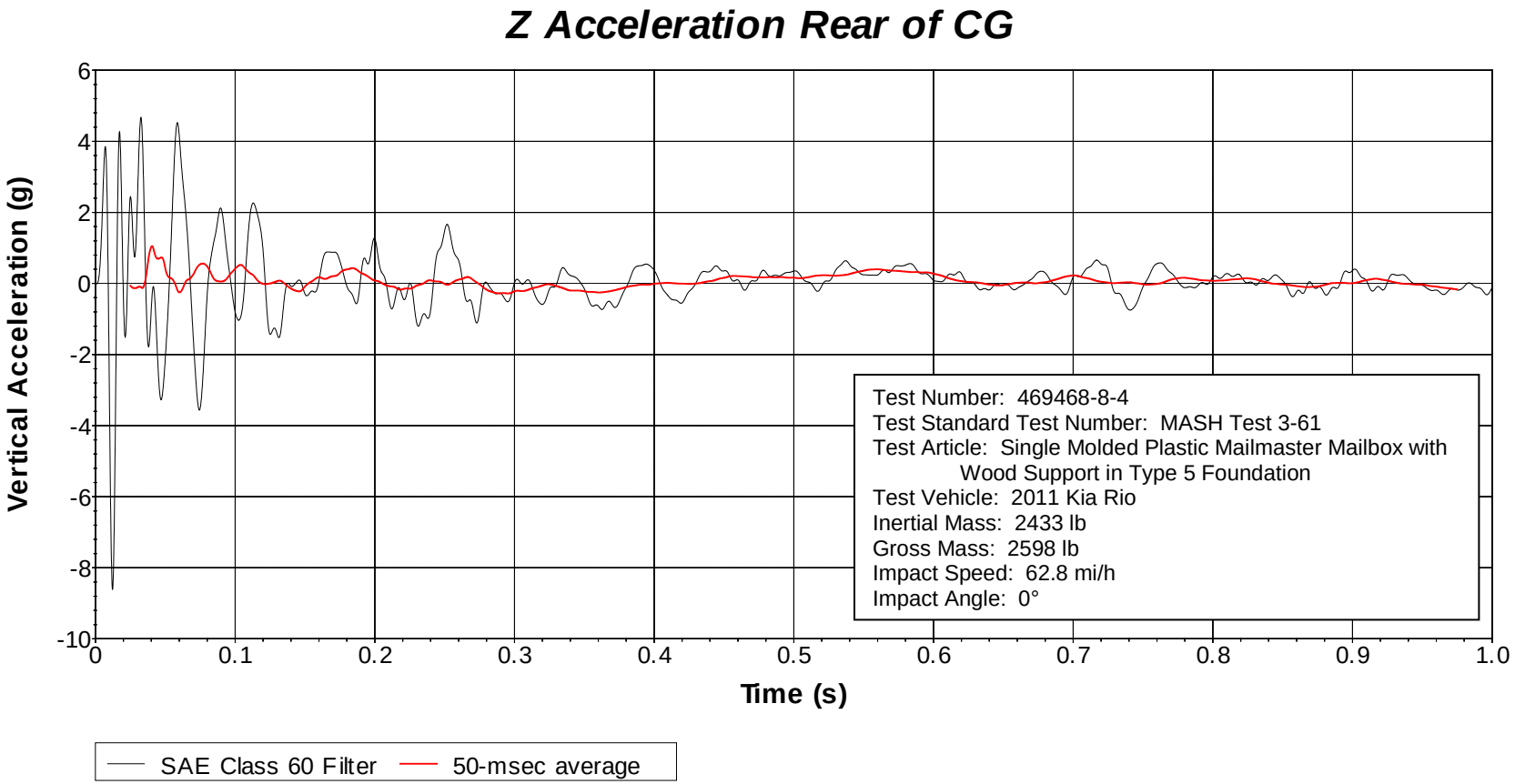

Figure H.32. Vehicle Vertical Accelerometer Trace for Test No. 469468-8-4 (Accelerometer Located Rear of Center of Gravity).

APPENDIX I. SKID-MOUNTED DUAL WOOD POST TEMPORARY SIGN SUPPORT SYSTEM

I.1 VEHICLE PROPERTIES AND INFORMATION

Table I.1. Vehicle Properties for Test No. 469468-9-1.

Date: 2018-2-19 Test No.: 469468-9-1 VIN No.: 1C6RD6FT0CS159827

Year: 2012 Make: DODGE Model: RAM 1500

Tire Size: 265/70 R 17 Tire Inflation Pressure: 35 PSI

Tread Type: HIGHWAY Odometer: 149523

Note any damage to the vehicle prior to test: NONE

● Denotes accelerometer location.

NOTES: --

Engine Type: V-8
Engine CID: 5.7 L

Transmission Type:
☑ Auto or ☐ Manual
☐ FWD ☑ RWD ☐ 4WD

Optional Equipment:
NONE

Dummy Data:
Type: NONE
Mass: NA
Seat Position: NA

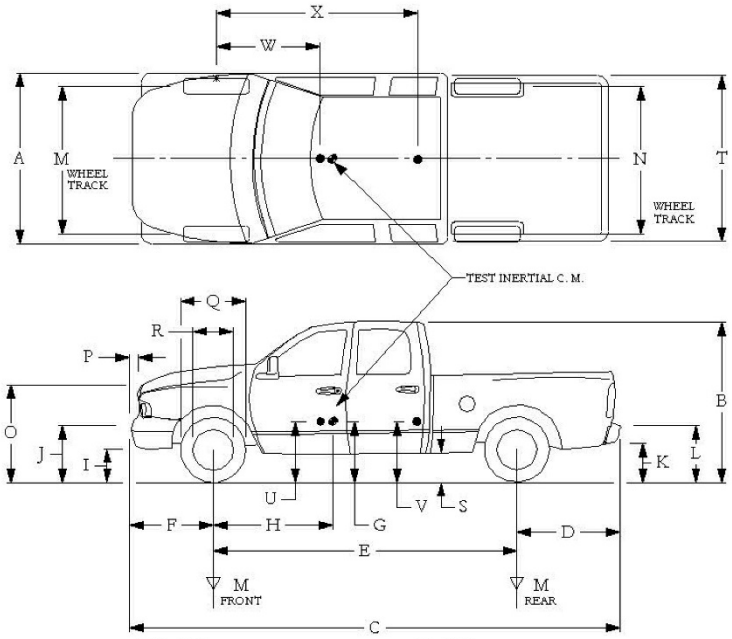

Geometry: inches

A	78.50	F	40.00	K	20.00	P	3.00	U	
B	74.00	G	28.50	L	30.00	Q	30.50	V	
C	227.50	H	62.10	M	68.50	R	18.00	W	
D	44.00	I	9.50	N	68.00	S	13.00	X	
E	140.50	J	27.00	O	46.00	T	77.00		

Wheel Center Height Front	14.75	Wheel Well Clearance (Front)	6.00	Bottom Frame Height - Front	12.00
Wheel Center Height Rear	14.75	Wheel Well Clearance (Rear)	9.25	Bottom Frame Height - Rear	25.50

RANGE LIMIT: A=78 ±2 inches; C=237 ±13 inches; E=148 ±12 inches; F=39 ±3 inches; G = > 28 inches; H = 63 ±4 inches; O=43 ±4 inches; M+N/2=67 ±1.5 inches

GVWR Ratings:		**Mass:** lb	Curb	Test Inertial	Gross Static
Front	3700	M_{front}	2870	2808	
Back	3900	M_{rear}	2000	2226	
Total	6700	M_{Total}	4870	5034	

(Allowable Range for TIM and GSM = 5000 lb ±110 lb)

Mass Distribution:
lb LF: 1403 RF: 1405 LR: 1129 RR: 1097

Table I.2. Measurements of Vehicle Vertical CG for Test No. 469468-9-1.

Date: 2018-2-19 Test No.: 469468-9-1 VIN: 1C6RD6FT0CS159827

Year: 2012 Make: DODGE Model: RAM 1500

Body Style: QUAD CAB Mileage: 149523

Engine: 4.7L V-8 Transmission: AUTO

Fuel Level: EMPTY Ballast: 120 LBS (440 lb max)

Tire Pressure: Front: 35 psi Rear: 35 psi Size: 265/70 R 17

Measured Vehicle Weights: (lb)					
LF:	1403	RF:	1405	Front Axle:	2808
LR:	1129	RR:	1097	Rear Axle:	2226
Left:	2532	Right:	2502	Total:	5034
				5000 ±110 lb allowed	

Wheel Base: 140.50 inches (148 ±12 inches allowed) Track: F: 68.50 inches R: 68.00 inches (Track = (F+R)/2 = 67 ±1.5 inches allowed)

Center of Gravity, SAE J874 Suspension Method

X:	62.13 inches	Rear of Front Axle	(63 ±4 inches allowed)
Y:	-0.20 inches	Left - Right +	of Vehicle Centerline
Z:	28.50 inches	Above Ground	(minumum 28.0 inches allowed)

Hood Height: 46.00 inches (43 ±4 inches allowed) Front Bumper Height: 27.00 inches

Front Overhang: 40.00 inches (39 ±3 inches allowed) Rear Bumper Height: 30.00 inches

Overall Length: 227.50 inches (237 ±13 inches allowed)

Table I.3. Exterior Crush Measurements of Vehicle for Test No. 469468-9-1.

Date: 2018-2-19 Test No.: 469468-9-1 VIN No.: 1C6RD6FT0CS159827

Year: 2012 Make: DODGE Model: RAM 1500

VEHICLE CRUSH MEASUREMENT SHEET[1]

Complete When Applicable	
End Damage	Side Damage
Undeformed end width _____	Bowing: B1 _____ X1 _____
Corner shift: A1 _____	B2 _____ X2 _____
A2 _____	
End shift at frame (CDC)	Bowing constant
(check one)	$\frac{X1+X2}{2}$ = _____
< 4 inches _____	
≥ 4 inches _____	

Note: Measure C_1 to C_6 from Driver to Passenger Side in Front or Rear impacts – Rear to Front in Side Impacts.

Specific Impact Number	Plane* of C-Measurements	Direct Damage		Field L**	C_1	C_2	C_3	C_4	C_5	C_6	±D
		Width** (CDC)	Max*** Crush								
1	Roof	10.0	1.0								
	inches										

[1]Table taken from National Accident Sampling System (NASS).

*Identify the plane at which the C-measurements are taken (e.g., at bumper, above bumper, at sill, above sill, at beltline, etc.) or label adjustments (e.g., free space).

Free space value is defined as the distance between the baseline and the original body contour taken at the individual C locations. This may include the following: bumper lead, bumper taper, side protrusion, side taper, etc. Record the value for each C-measurement and maximum crush.

**Measure and document on the vehicle diagram the beginning or end of the direct damage width and field L (e.g., side damage with respect to undamaged axle).

***Measure and document on the vehicle diagram the location of the maximum crush.

Note: Use as many lines/columns as necessary to describe each damage profile.

Table I.4. Occupant Compartment Measurements of Vehicle for Test No. 469468-9-1.

Date:	2018-2-19	Test No.:	469468-9-1	VIN No.:	1C6RD6FT0CS159827
Year:	2012	Make:	DODGE	Model:	RAM 1500

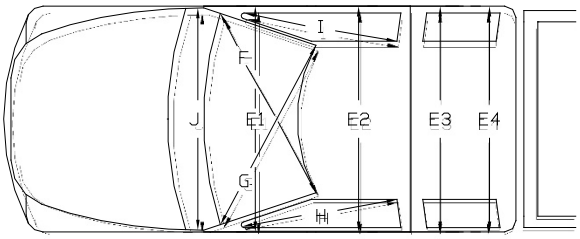

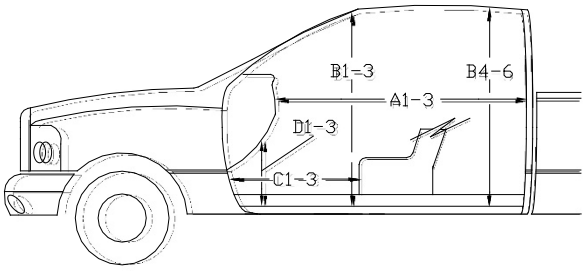

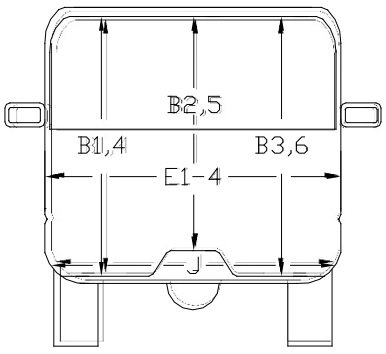

*Lateral area across the cab from driver's side kickpanel to passenger's side kickpanel.

OCCUPANT COMPARTMENT DEFORMATION MEASUREMENT

	Before	After	Differ.
		inches	
A1	65.00	65.00	0.00
A2	63.00	63.00	0.00
A3	65.50	65.50	0.00
B1	45.00	45.00	0.00
B2	38.00	38.00	0.00
B3	45.00	45.00	0.00
B4	39.50	39.50	0.00
B5	43.00	43.00	0.00
B6	39.50	39.50	0.00
C1	6.00	6.00	0.00
C2	0.00	0.00	0.00
C3	26.00	26.00	0.00
D1	11.00	11.00	0.00
D2	0.00	0.00	0.00
D3	11.50	11.50	0.00
E1	58.50	58.50	0.00
E2	63.50	63.50	0.00
E3	63.50	63.50	0.00
E4	63.50	63.50	0.00
F	59.00	59.00	0.00
G	59.00	59.00	0.00
H	37.50	37.50	0.00
I	37.50	37.50	0.00
J*	25.00	25.00	0.00

I.2 SEQUENTIAL PHOTOGRAPHS

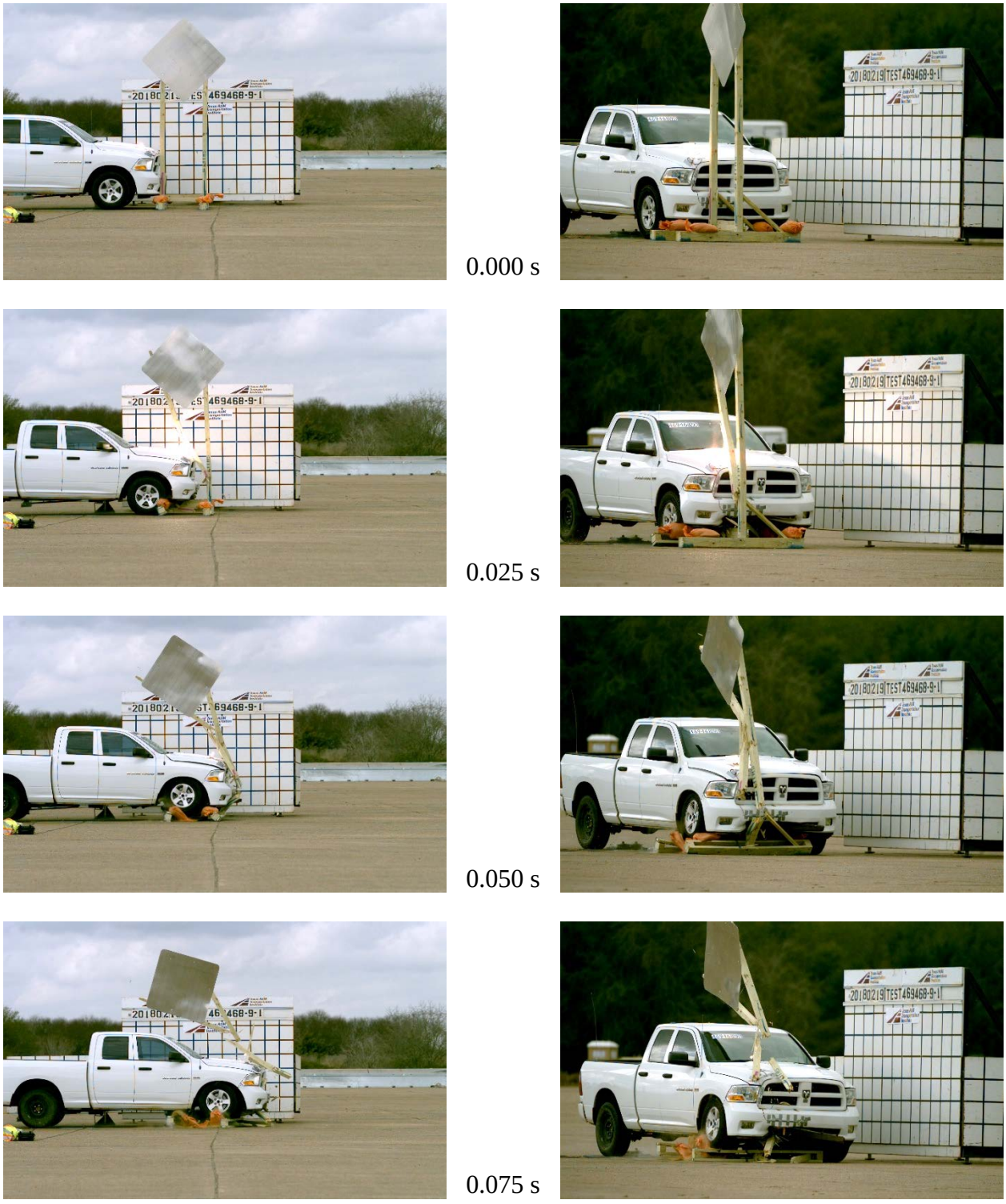

Figure I.1. Sequential Photographs for Test No. 469468-9-1 (Perpendicular and Oblique Views).









Figure I.1. Sequential Photographs for Test No. 469468-9-1 (Perpendicular and Oblique Views) (Continued).

APPENDIX J. MBGF WITH W6×8.5 STEEL POSTS IN ROCKY TERRAIN

J.1 DETAILS OF THE SYSTEM

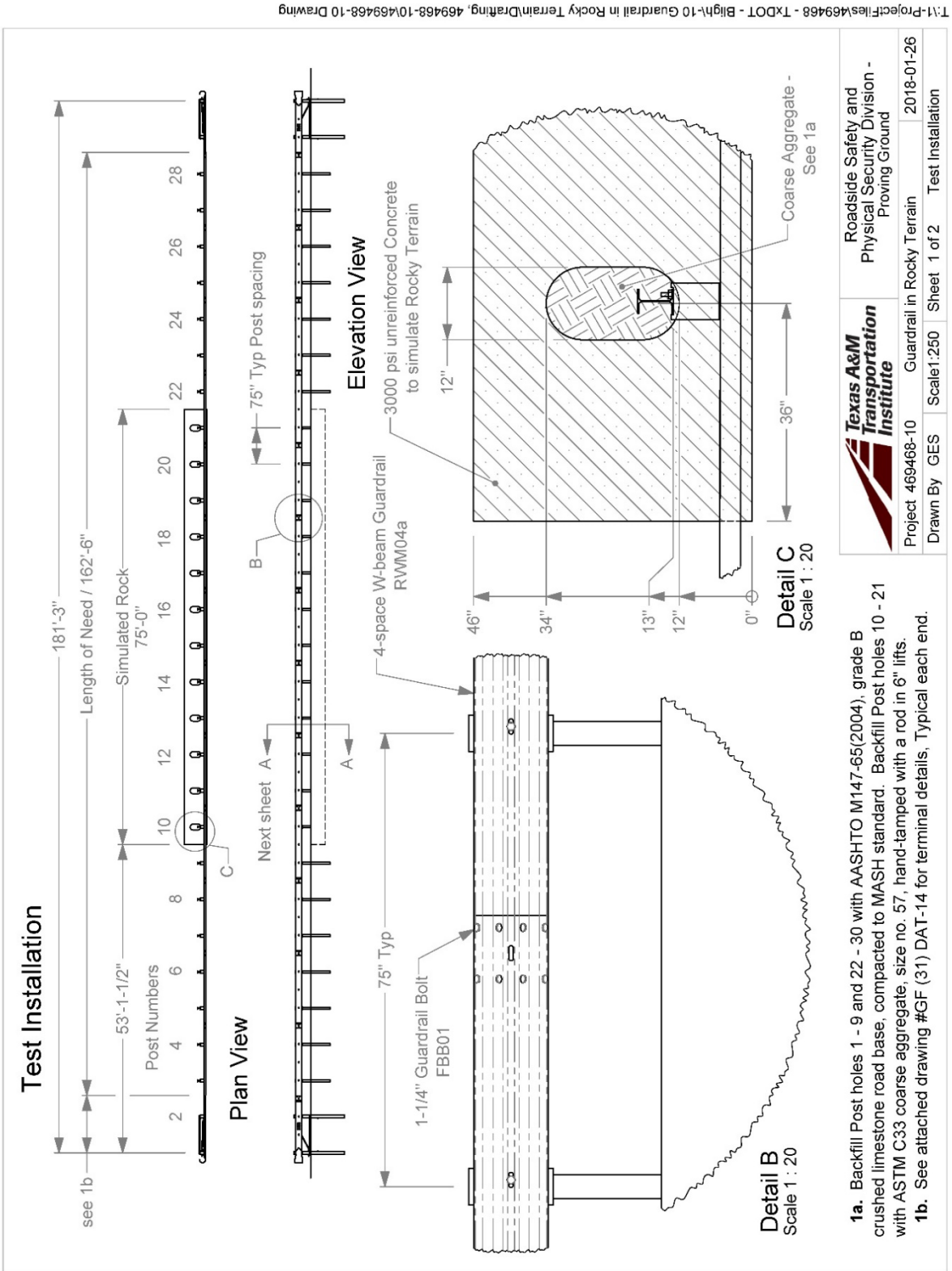

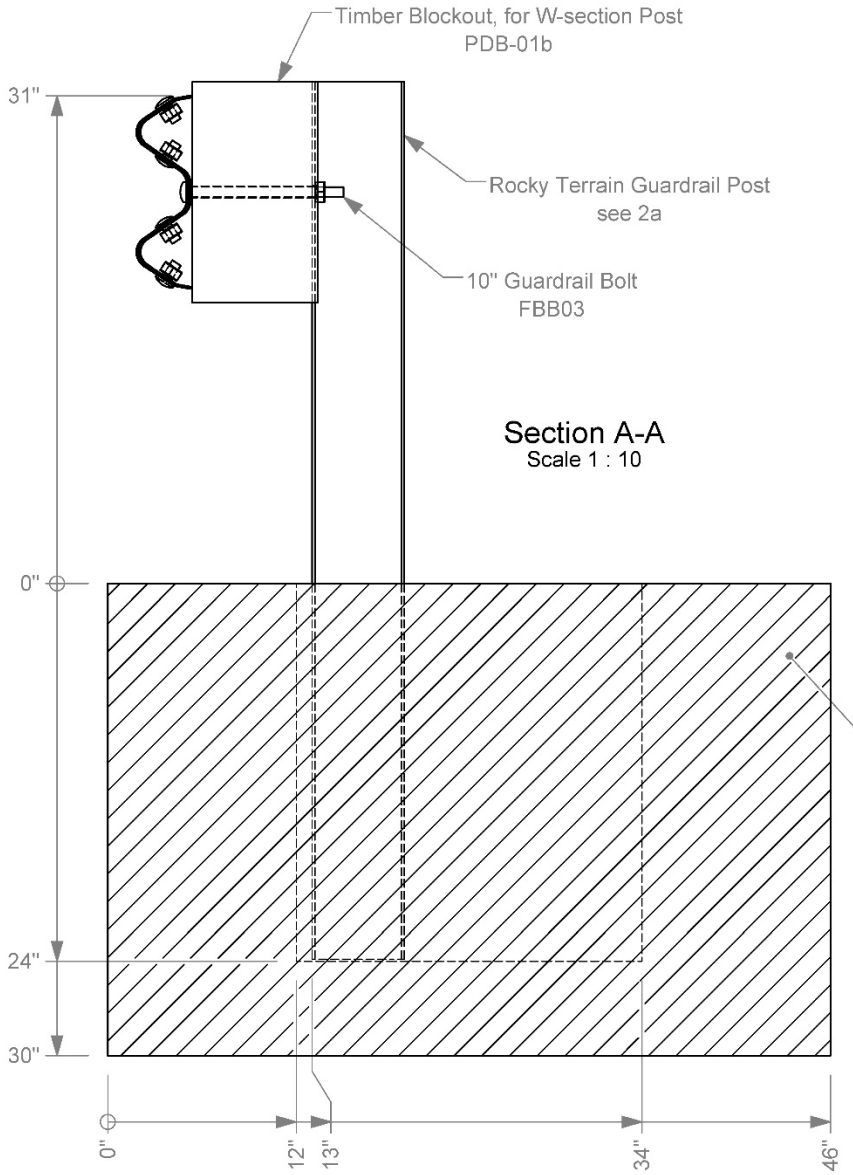

Section A-A
Scale 1 : 10

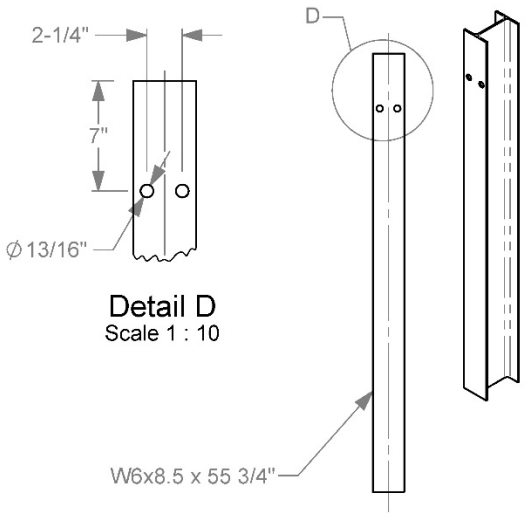

Detail D
Scale 1 : 10

Rocky Terrain Guardrail Post
W6x8.5 - ASTM A36

3000 psi unreinforced Concrete
to simulate Rocky Terrain

2a. 55-3/4" Post is typical at Simulated Rock (Posts 10 - 21). 72" W6x8.5 Wide Flange Guardrail Posts at other LON locations.

Texas A&M Transportation Institute	Roadside Safety and Physical Security Division - Proving Ground		
Project 469468-10	Guardrail in Rocky Terrain		2018-01-26
Drawn By GES	Scale 1:20	Sheet 2 of 2	Cross Section

T:\1-ProjectFiles\469468 - TxDOT - Bligh\-10 Guardrail in Rocky Terrain\Drafting, 469468-10\469468-10 Drawing

Texas A&M Transportation Institute Proving Ground, 3100 SH 47, Bldg 7091, Bryan, TX 77807 Texas A&M University, College Station, TX 77843, Phone 979-845-6375	5.7.2 Concrete Break	Doc. No. QPF 5.7.2	Revision Date: 2012-09-17
Quality Policy Form	Revised by: G. E. Schroeder Approved by: C. E. But	Revision: 5	Page: 1 of 1

Project No.: 469468-10 **Casting Date:** 2018-3-8

Placement: **Mix Design P.S.I.:** 3000

Truck No.	Batch Ticket	Yards
1		10

Printed name of Technician taking sample: GREG FRITZ

Signature of Technician taking sample: [signature]

Printed name of Technician breaking sample: GREG FRITZ

Signature of Technician breaking sample: [signature]

Break Date	Cylinder Age	Truck No.	Total Load (Pounds)	PSI Break	Average
2018-3-27	19 DAYS	1	123,000	4350	
↓	↓	↓	116,000	4,105	4350
↓	↓	↓	130,000	4,600	

Table J.1. Summary of Strong Soil Test Results for Establishing Installation Procedure.

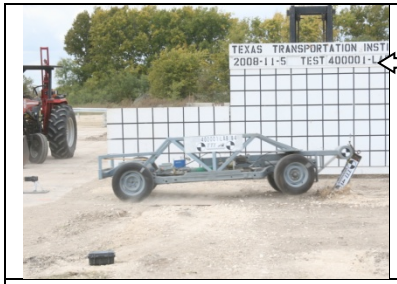

Dynamic Setup

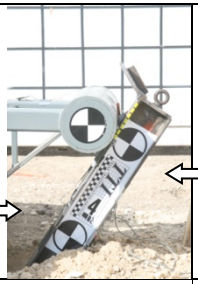

Post-Test Photo of post

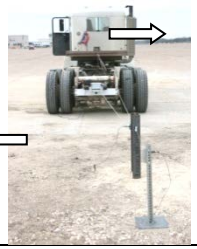

Post-Test Photo

Static Load Test



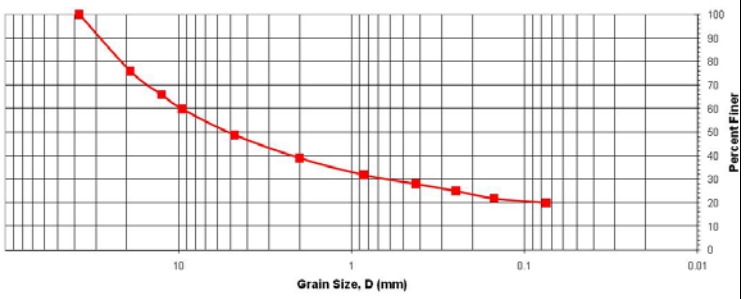

Dynamic Test Installation Details

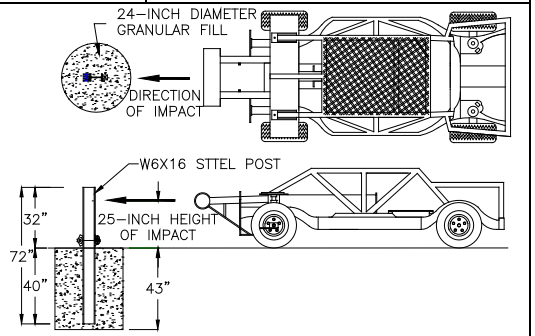

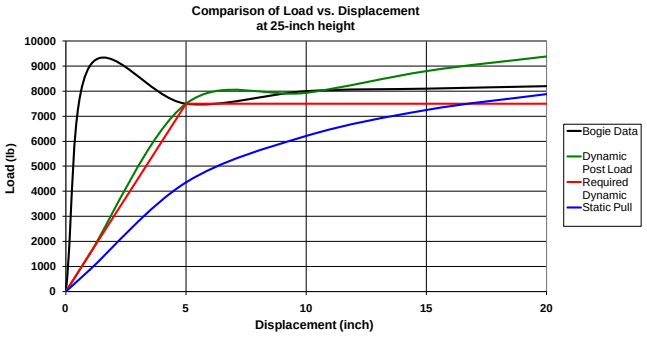

Static Load Test Installation Details

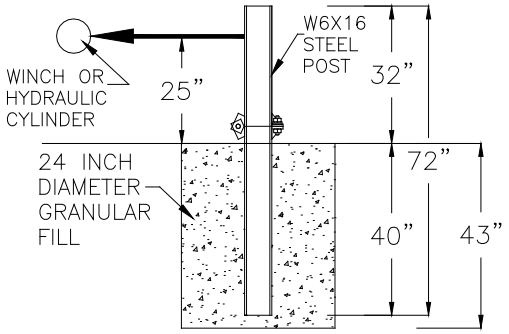

Date	2008-11-05
Test Facility and Site Location	TTI Proving Ground, 3100 SH 47, Bryan, TX 77807
In Situ Soil Description (ASTM D2487	Sandy gravel with silty fines
Fill Material Description (ASTM D2487) and sieve analysis	AASHTO Grade B Soil-Aggregate (see sieve analysis above)
Description of Fill Placement Procedure	6-inch lifts tamped with a pneumatic compactor
Bogie Weight	5009 lb
Impact Velocity	20.5 mph

Table J.2. Test Day Static Soil Strength Documentation for Test No. 469468-10-2.

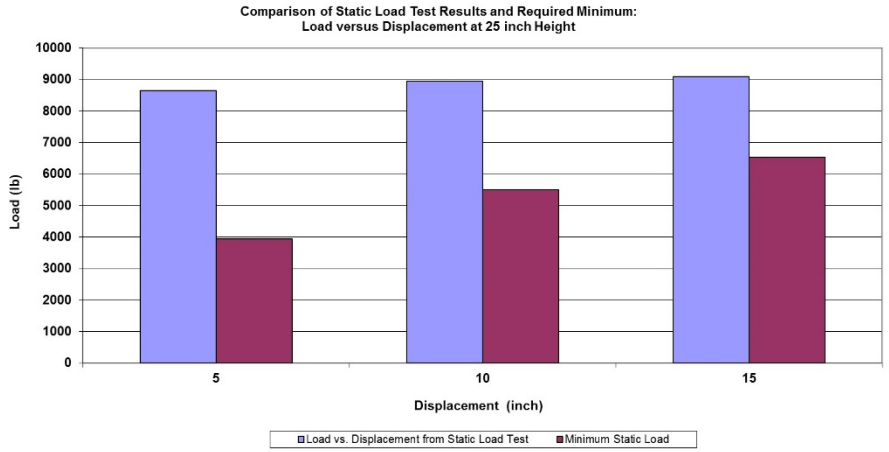



Static Load Setup

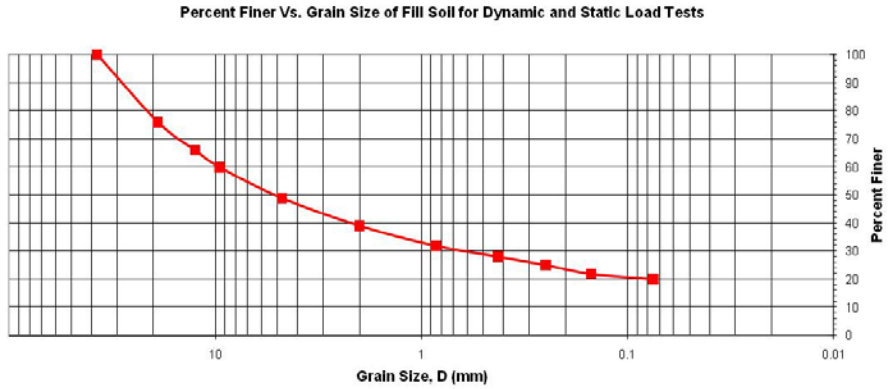



Post-Test Photo of Post

Date	2018-04-26
Test Facility and Site Location	TTI Proving Ground – 3100 SH 47, Bryan, Tx
In Situ Soil Description (ASTM D2487)	Sandy gravel with silty fines
Fill Material Description (ASTM D2487) and sieve analysis	AASHTO Grade B Soil-Aggregate (see sieve analysis)
Description of Fill Placement Procedure	6-inch lifts tamped with a pneumatic compactor

Table J.3. Test Day Static Soil Strength Documentation for Test No. 469468-10-1.

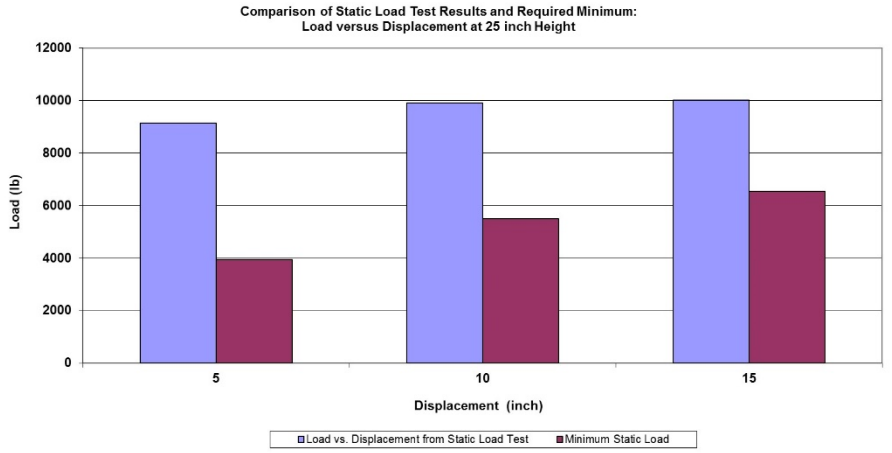



Static Load Setup

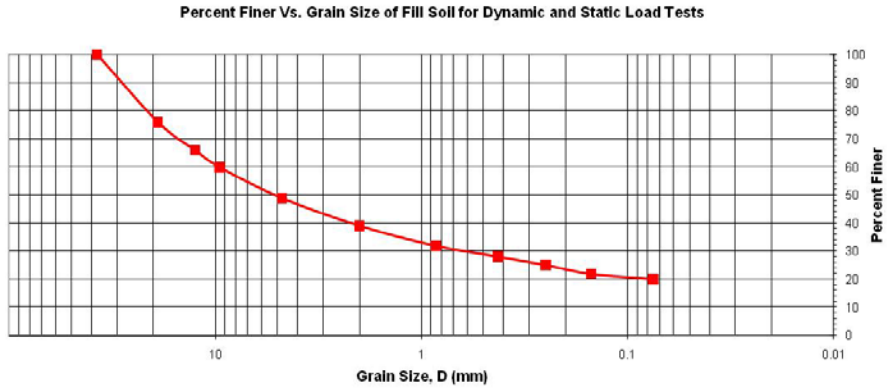



Post-Test Photo of Post

Date	2018-03-27
Test Facility and Site Location	TTI Proving Ground – 3100 SH 47, Bryan, Tx
In Situ Soil Description (ASTM D2487)	Sandy gravel with silty fines
Fill Material Description (ASTM D2487) and sieve analysis	AASHTO Grade B Soil-Aggregate (see sieve analysis)
Description of Fill Placement Procedure	6-inch lifts tamped with a pneumatic compactor

J.4 *MASH* TEST 3-10 (CRASH TEST NO. 469468-10-2)

J.4.1 Vehicle Properties and Information

Table J.4. Vehicle Properties for Test No. 469468-10-2.

Date: 2018-04-26 Test No.: 469468-10-2 VIN No.: KNADE223496462610

Year: 2009 Make: KIA Model: RIO

Tire Inflation Pressure: 32 PSI Odometer: 201816 Tire Size: 185/65R14

Describe any damage to the vehicle prior to test:

● Denotes accelerometer location.

NOTES:

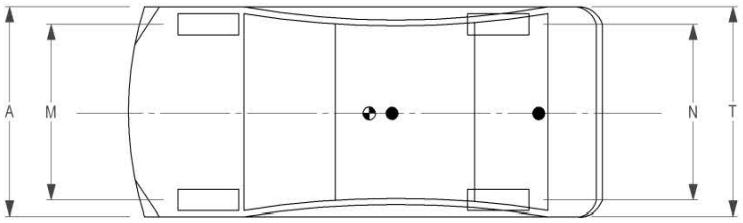

Engine Type: 4 CYL
Engine CID: 1.6 L
Transmission Type:
☑ Auto or ☐ Manual
☑ FWD ☐ RWD ☐ 4WD
Optional Equipment:
NONE

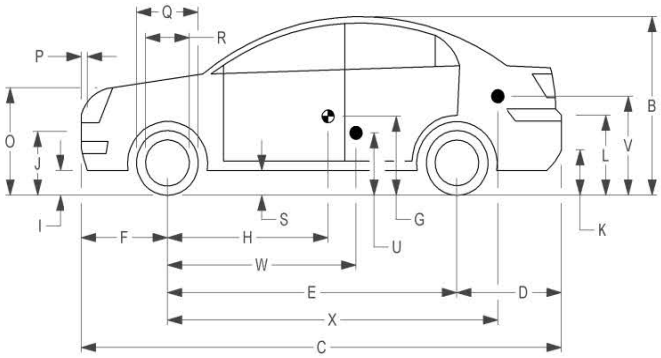

Dummy Data:
Type: 50 Percentile male
Mass: 165 lb
Seat Position: Driver Side

Geometry: inches

A	66.38	F	33.00	K	12.25	P	4.12	U	14.75		
B	51.50	G		L	25.25	Q	22.50	V	19.50		
C	165.75	H	36.30	M	57.75	R	15.50	W	36.30		
D	34.00	I	7.75	N	57.70	S	8.25	X	106.80		
E	98.75	J	21.50	O	28.25	T	66.20				
	Wheel Center Ht Front		11.00		Wheel Center Ht Rear		11.00	W-H	0.00		

RANGE LIMIT: A = 65 ±3 inches; C = 169 ±8 inches; E = 98 ±5 inches; F = 35 ±4 inches; H = 39 ±4 inches; O = TOP OF RADIATOR SUPPORT ~~(24 ±4inches)~~; M+N/2 = 56 ±2 inches; W-H < 2 inches or use MASH Paragraph A4.3.2

GVWR Ratings:		**Mass:** lb	Curb	Test Inertial	Gross Static
Front	1718	M_{front}	1566	1546	1631
Back	1874	M_{rear}	896	901	981
Total	3638	M_{Total}	2462	2447	2612

Allowable TIM = 2420 lb ±55 lb | Allowable GSM = 2585 lb ± 55 lb

Mass Distribution:
lb LF: 774 RF: 772 LR: 455 RR: 446

Table J.5. Exterior Crush Measurements of Vehicle for Test No. 469468-10-2.

Date: 2018-04-26 Test No.: 469468-10-2 VIN No.: KNADE223496462610

Year: 2009 Make: KIA Model: RIO

VEHICLE CRUSH MEASUREMENT SHEET[1]

Complete When Applicable	
End Damage	Side Damage
Undeformed end width _____	Bowing: B1 _____ X1 _____
Corner shift: A1 _____	B2 _____ X2 _____
A2 _____	
End shift at frame (CDC)	Bowing constant
(check one)	$\frac{X1+X2}{2}$ = _____
< 4 inches _____	
≥ 4 inches _____	

Note: Measure C_1 to C_6 from Driver to Passenger Side in Front or Rear impacts – Rear to Front in Side Impacts.

Specific Impact Number	Plane* of C-Measurements	Direct Damage		Field L**	C_1	C_2	C_3	C_4	C_5	C_6	±D
		Width** (CDC)	Max*** Crush								
1	AT FT BUMPER	15	5	12	5	3	1				-14
2	ABOVE FT BUMPER	15	9	36	1	2.5	3	6	8	9	+60
	Units in inches										

[1]Table taken from National Accident Sampling System (NASS).

*Identify the plane at which the C-measurements are taken (e.g., at bumper, above bumper, at sill, above sill, at beltline, etc.) or label adjustments (e.g., free space).

Free space value is defined as the distance between the baseline and the original body contour taken at the individual C locations. This may include the following: bumper lead, bumper taper, side protrusion, side taper, etc. Record the value for each C-measurement and maximum crush.

**Measure and document on the vehicle diagram the beginning or end of the direct damage width and field L (e.g., side damage with respect to undamaged axle).

***Measure and document on the vehicle diagram the location of the maximum crush.

Note: Use as many lines/columns as necessary to describe each damage profile.

Table J.6. Occupant Compartment Measurements of Vehicle for Test No. 469468-10-2.

Date:	2018-04-26	Test No.:	469468-10-2	VIN No.:	KNADE223496462610
Year:	2009	Make:	KIA	Model:	RIO

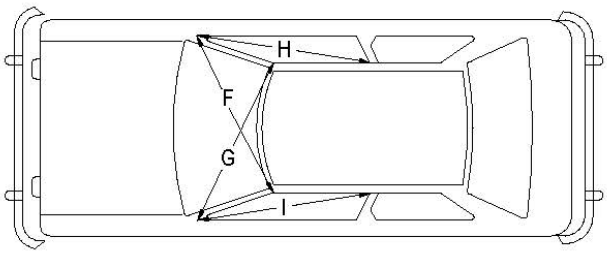

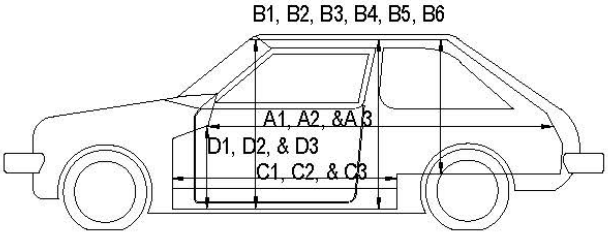

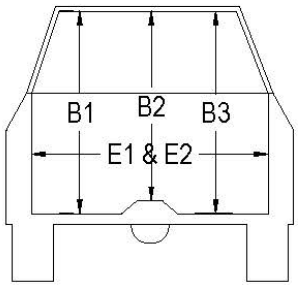

OCCUPANT COMPARTMENT DEFORMATION MEASUREMENT

	Before	After	Differ.
	inches		
A1	67.50	67.50	0.00
A2	67.25	67.25	0.00
A3	67.75	67.75	0.00
B1	40.50	40.50	0.00
B2	39.00	39.00	0.00
B3	40.50	40.50	0.00
B4	36.25	36.25	0.00
B5	36.00	36.00	0.00
B6	36.25	36.25	0.00
C1	26.00	26.00	0.00
C2	0.00	0.00	0.00
C3	26.00	26.00	0.00
D1	9.50	9.50	0.00
D2	0.00	0.00	0.00
D3	9.50	9.50	0.00
E1	51.50	51.50	0.00
E2	51.00	51.00	0.00
F	51.00	51.00	0.00
G	51.00	51.00	0.00
H	37.50	37.50	0.00
I	37.50	37.50	0.00
J*	51.00	51.00	0.00

*Lateral area across the cab from
driver's side kickpanel to passenger's side kickpanel.

J.4.2 Sequential Photographs

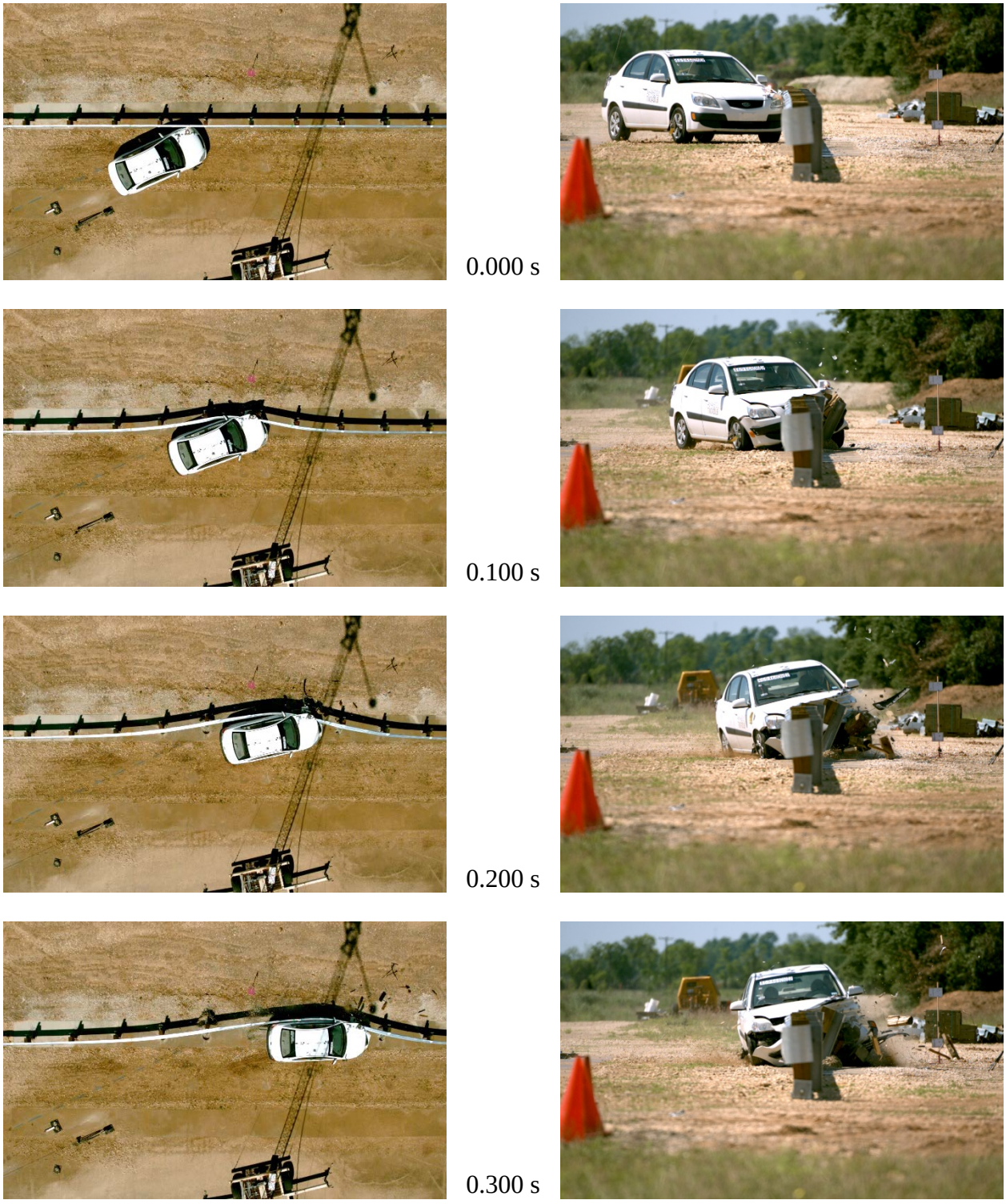

Figure J.1. Sequential Photographs for Test No. 469468-10-2 (Overhead and Frontal Views).

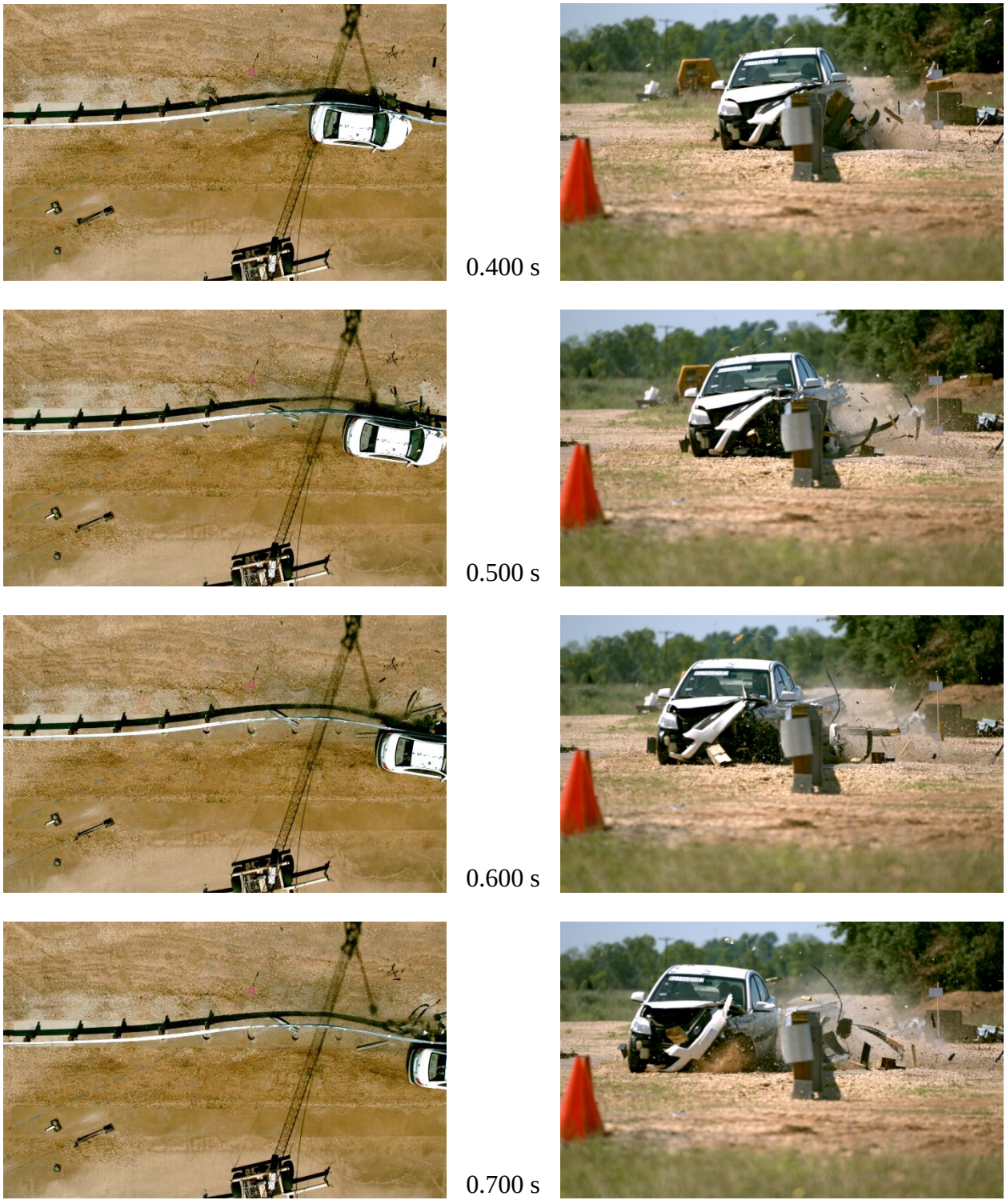

Figure J.1. Sequential Photographs for Test No. 469468-10-2 (Overhead and Frontal Views) (Continued).


0.000 s


0.400 s


0.100 s


0.500 s


0.200 s


0.600 s


0.300 s


0.700 s

Figure J.2. Sequential Photographs for Test No. 469468-10-2 (Rear View).

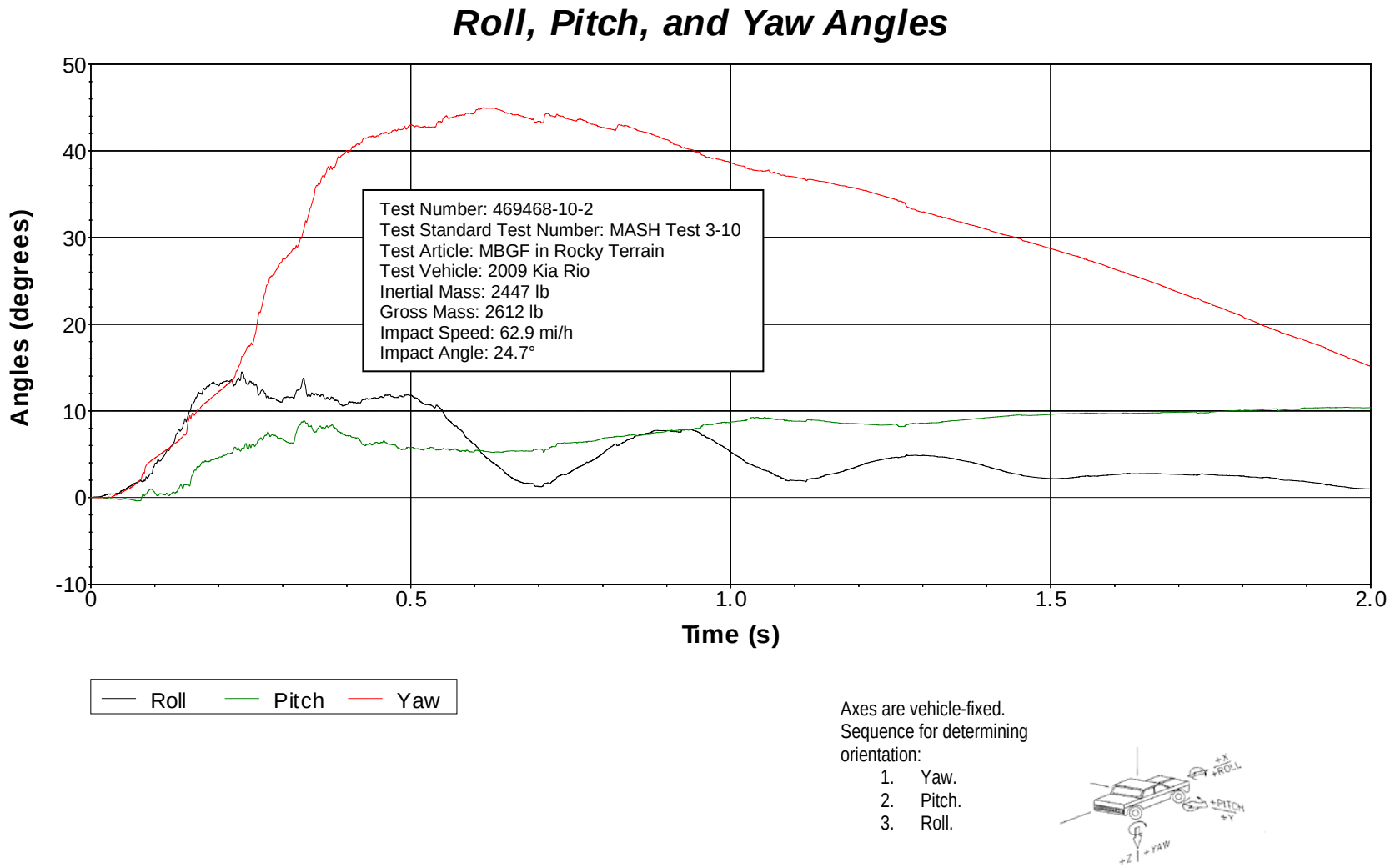

Figure J.3. Vehicle Angular Displacements for Test No. 469468-10-2.

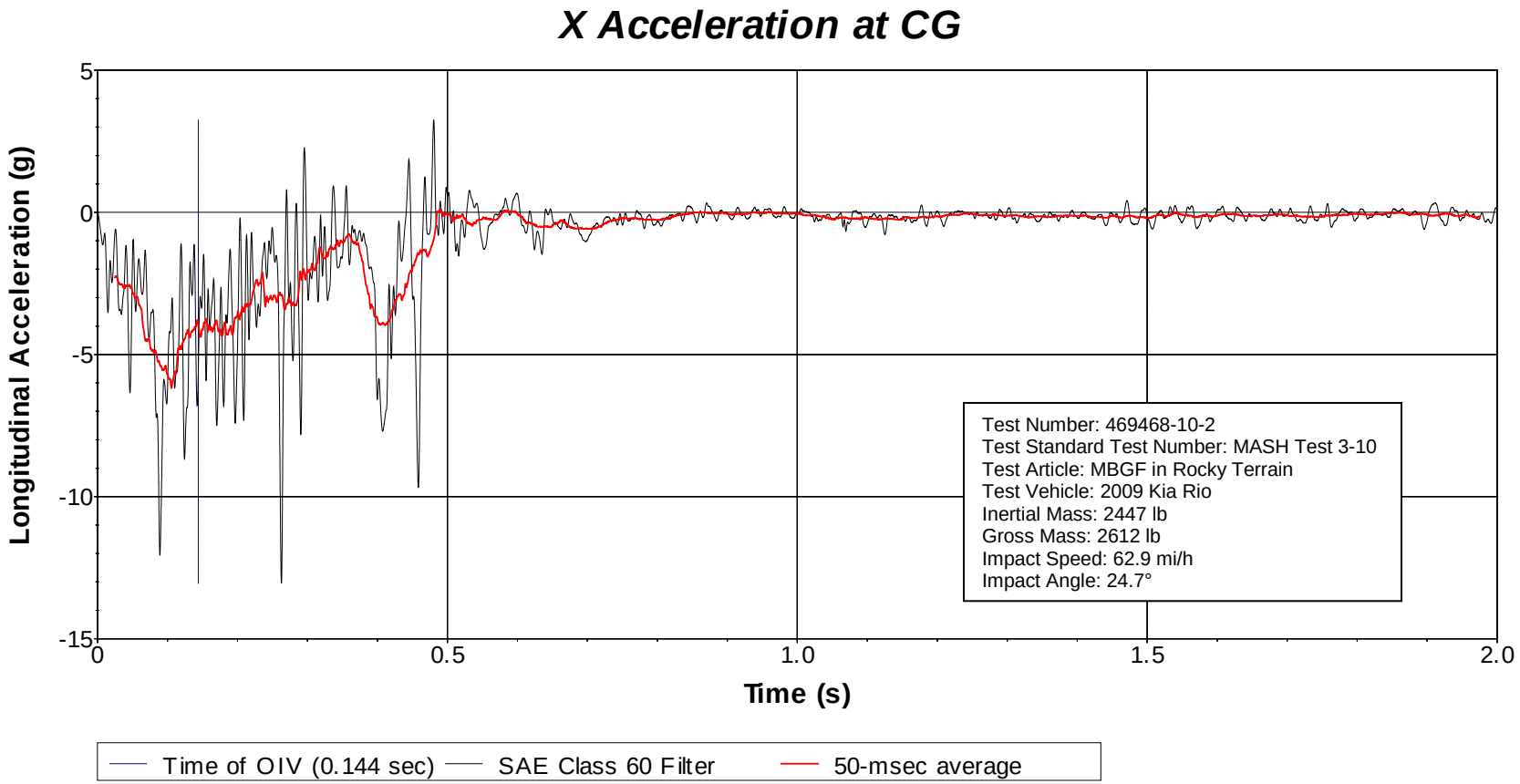

Figure J.4. Vehicle Longitudinal Accelerometer Trace for Test No. 469468-10-2 (Accelerometer Located at Center of Gravity).

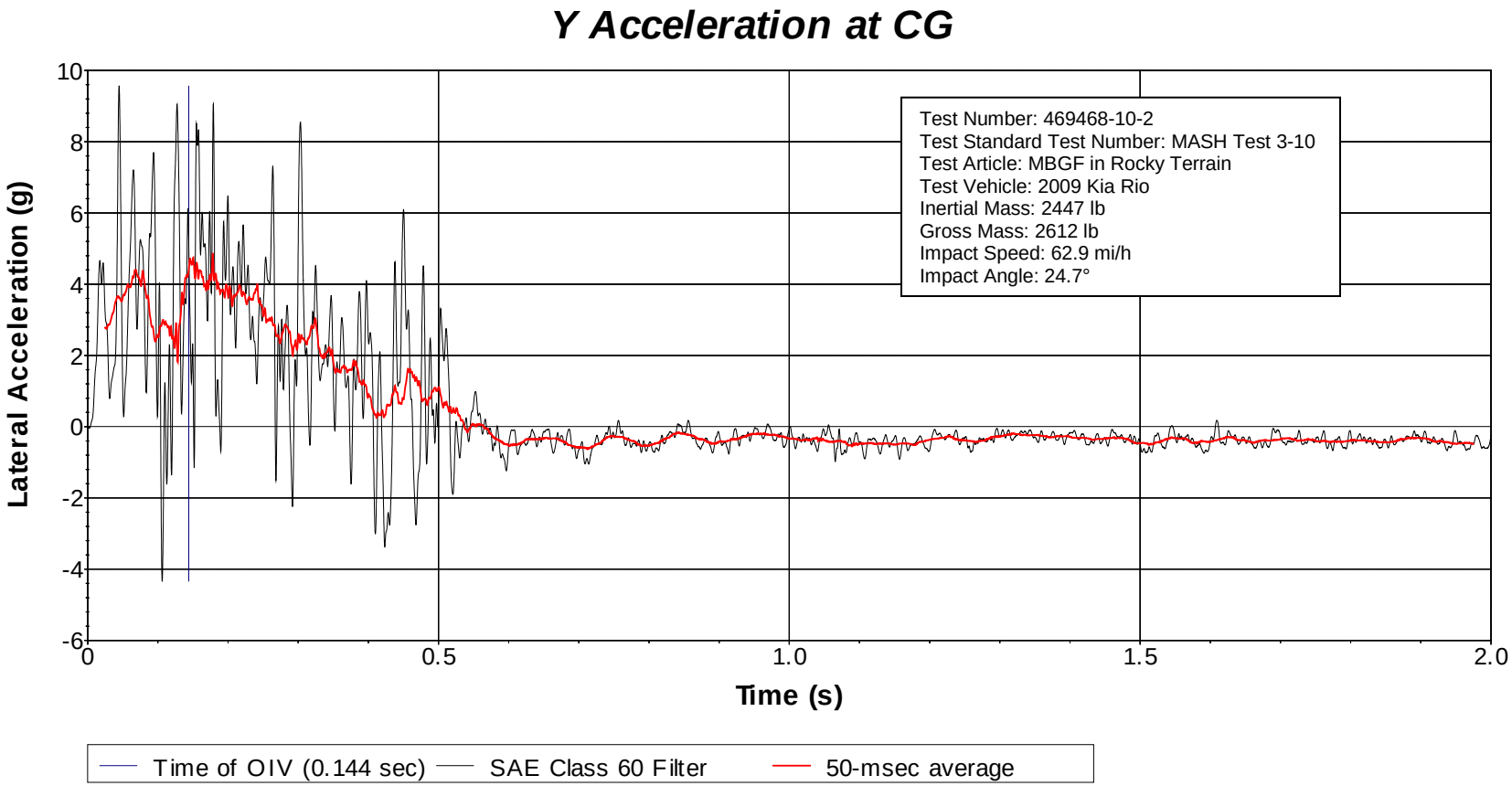

Figure J.5. Vehicle Lateral Accelerometer Trace for Test No. 469468-10-2 (Accelerometer Located at Center of Gravity).

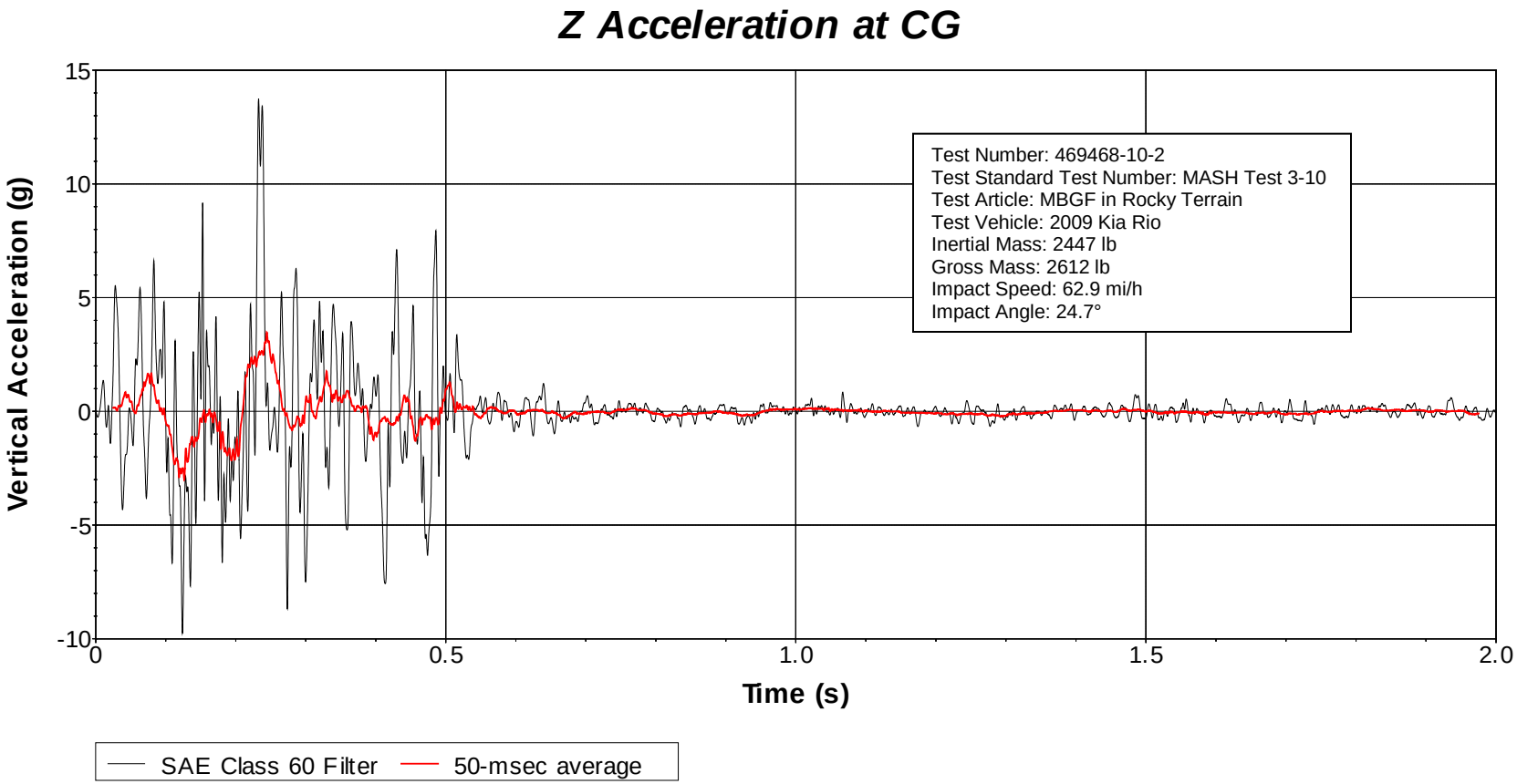

Figure J.6. Vehicle Vertical Accelerometer Trace for Test No. 469468-10-2 (Accelerometer Located at Center of Gravity).

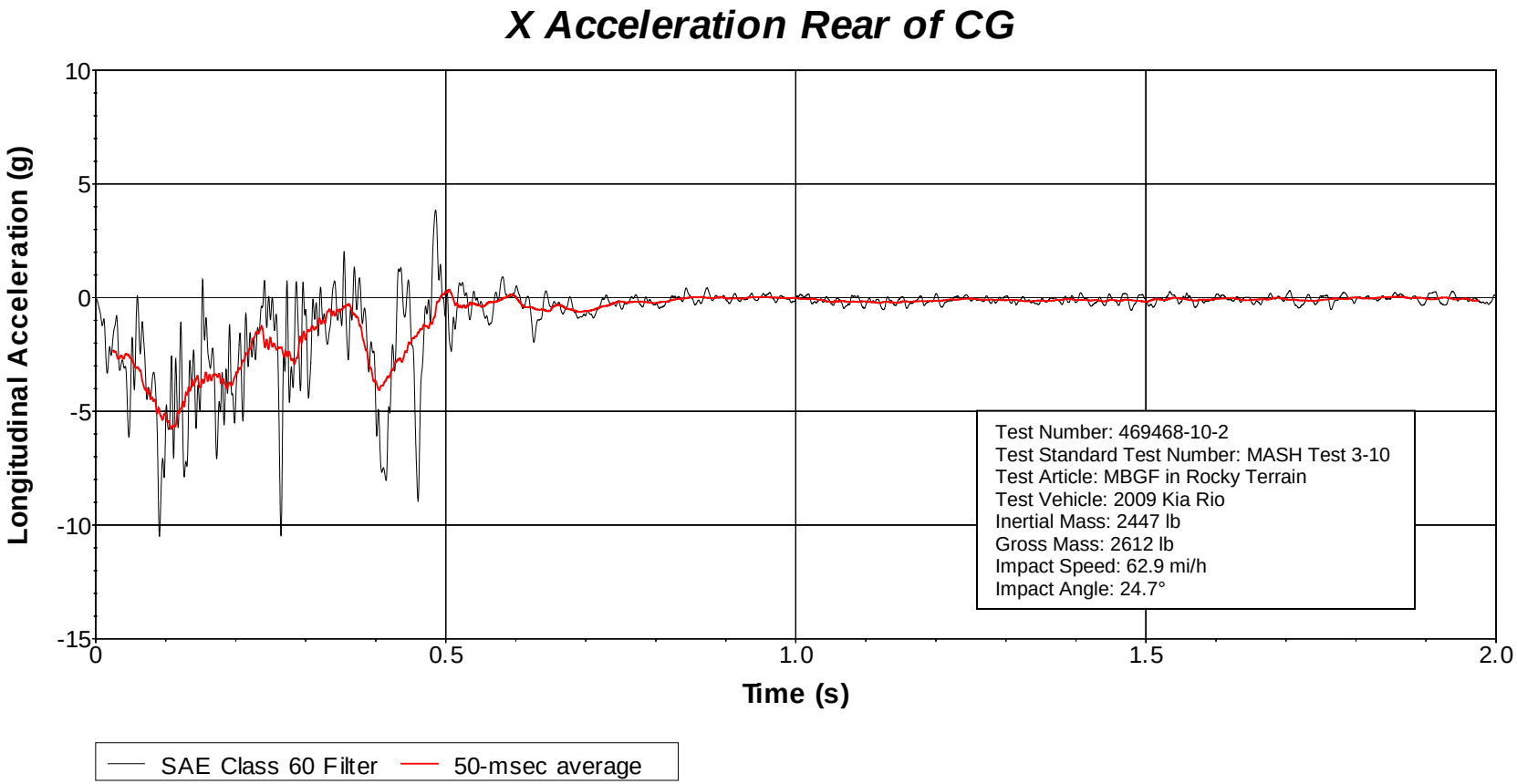

Figure J.7. Vehicle Longitudinal Accelerometer Trace for Test No. 469468-10-2 (Accelerometer Located Rear of Center of Gravity).

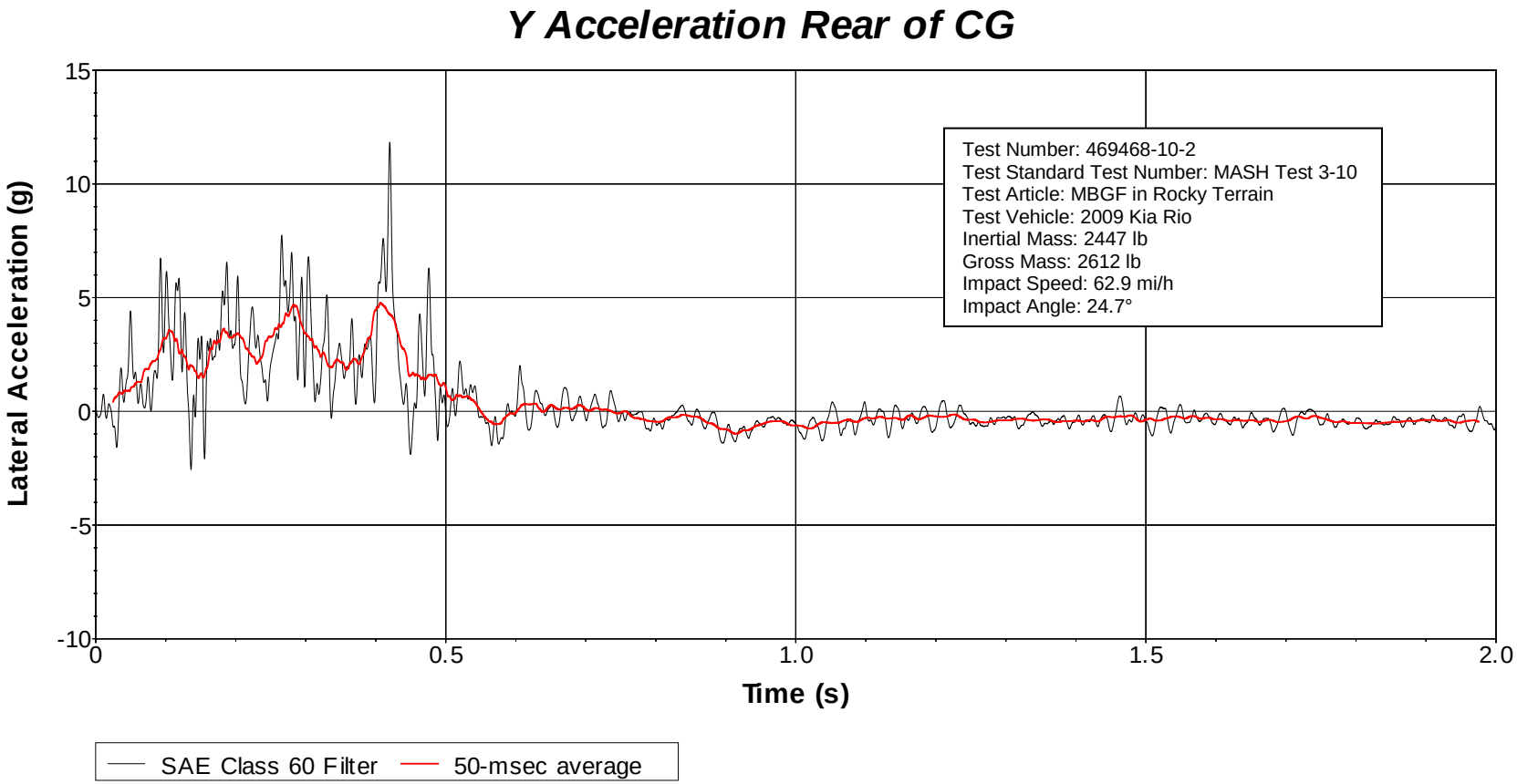

Figure J.8. Vehicle Lateral Accelerometer Trace for Test No. 469468-10-2 (Accelerometer Located Rear of Center of Gravity).

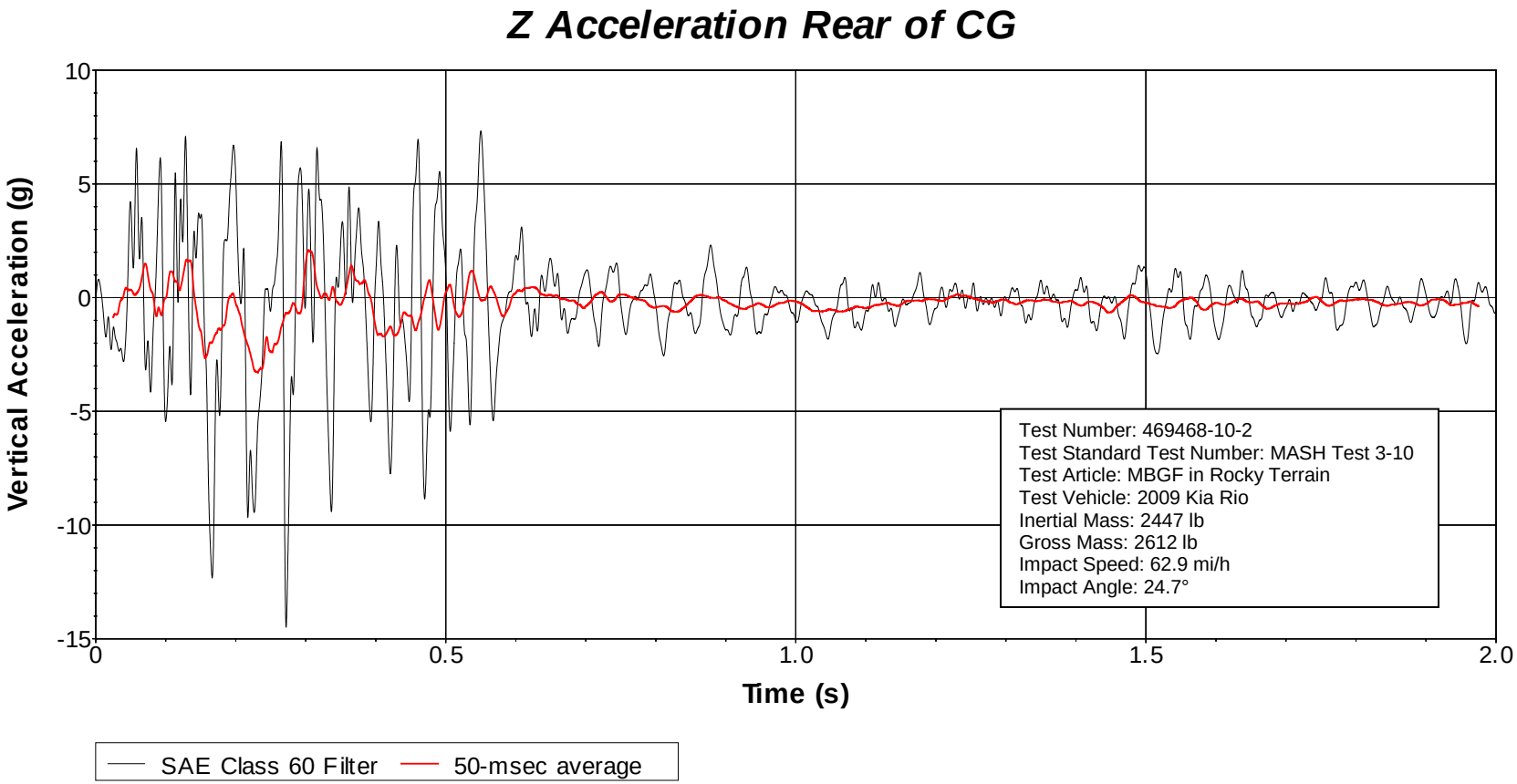

Figure J.9. Vehicle Vertical Accelerometer Trace for Test No. 469468-10-2 (Accelerometer Located Rear of Center of Gravity).

J.5 *MASH* TEST 3-11 (CRASH TEST NO. 469468-10-1)

J.5.1 Vehicle Properties and Information

Table J.7. Vehicle Properties for Test No. 469468-10-1.

Date:	2018-3-27	Test No.:	469468-10-1	VIN No.:	1C6RD6FT6CS221909
Year:	2012	Make:	DODGE	Model:	RAM 1500
Tire Size:	265/70 R 17			Tire Inflation Pressure:	35 PSI
Tread Type:	HIGHWAY			Odometer:	200400

Note any damage to the vehicle prior to test: NONE

● Denotes accelerometer location.

NOTES:

Engine Type: V-8
Engine CID: 5.7L

Transmission Type:
☑ Auto or ☐ Manual
☐ FWD ☑ RWD ☐ 4WD

Optional Equipment:
NONE

Dummy Data:
Type: NONE
Mass:
Seat Position:

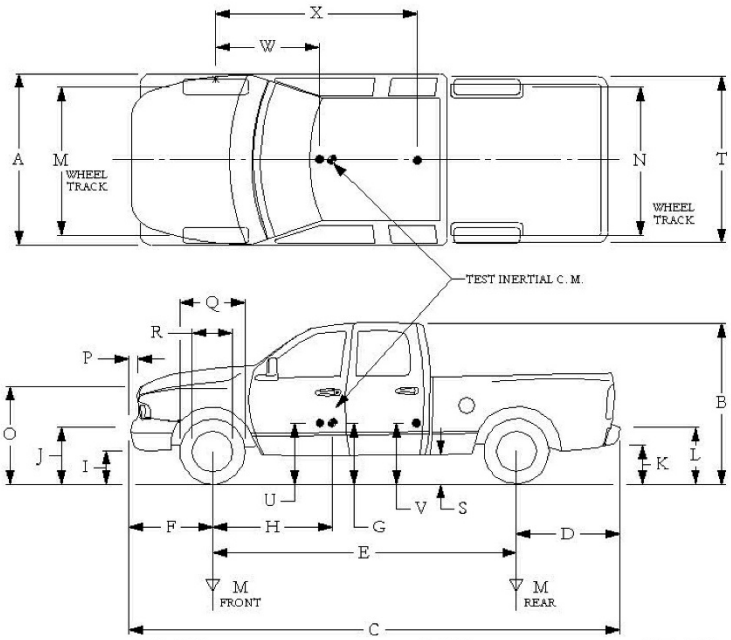

Geometry: inches

A	78.50	F	40.00	K	20.00	P	3.00	U	27.75		
B	74.00	G	28.50	L	30.00	Q	30.50	V	30.50		
C	227.50	H	61.58	M	68.50	R	18.00	W	61.50		
D	44.00	I	11.75	N	68.00	S	13.00	X	77.75		
E	140.50	J	27.00	O	46.00	T	77.00				
Wheel Center Height Front	14.75			Wheel Well Clearance (Front)	6.00			Bottom Frame Height - Front	12.00		
Wheel Center Height Rear	14.75			Wheel Well Clearance (Rear)	9.25			Bottom Frame Height - Rear	25.50		

RANGE LIMIT: A=78 ±2 inches; C=237 ±13 inches; E=148 ±12 inches; F=39 ±3 inches; G = > 28 inches; H = 63 ±4 inches; O=43 ±4 inches; M+N/2=67 ±1.5 inches

GVWR Ratings:		**Mass:** lb	Curb	Test Inertial	Gross Static
Front	3700	M_{front}	2820	2818	
Back	3900	M_{rear}	2030	2199	
Total	6700	M_{Total}	4850	5017	

(Allowable Range for TIM and GSM = 5000 lb ±110 lb)

Mass Distribution:
lb LF: 1421 RF: 1397 LR: 1081 RR: 1118

Table J.8. Measurements of Vehicle Vertical CG for Test No. 469468-10-1.

Date: 2018-03-27 Test No.: 469468-10-1 VIN: 1C6RD6FT6CS221909

Year: 2012 Make: Dodge Model: RAM 1500

Body Style: Quad Cab Mileage: 200400

Engine: 4.7 liter V-8 Transmission: Automatic

Fuel Level: Empty Ballast: 133 lb (440 lb max)

Tire Pressure: Front: 35 psi Rear: 35 psi Size: 265/70R17

Measured Vehicle Weights: (lb)									
LF:	1421		RF:	1397		Front Axle:	2818		
LR:	1081		RR:	1118		Rear Axle:	2199		
Left:	2502		Right:	2515		Total:	5017		
						5000 ±110 lb allowed			
Wheel Base:	140.5	inches	Track: F:	68.5	inches	R:	68	inches	
148 ±12 inches allowed				Track = (F+R)/2 = 67 ±1.5 inches allowed					
Center of Gravity, SAE J874 Suspension Method									
X:	61.58	inches	Rear of Front Axle	(63 ±4 inches allowed)					
Y:	0.09	inches	Left -	Right +	of Vehicle Centerline				
Z:	28.5	inches	Above Ground	(minumum 28.0 inches allowed)					

Hood Height: 46.00 inches
43 ±4 inches allowed

Front Bumper Height: 27.00 inches

Front Overhang: 40.00 inches
39 ±3 inches allowed

Rear Bumper Height: 30.00 inches

Overall Length: 227.50 inches
237 ±13 inches allowed

Table J.9. Exterior Crush Measurements of Vehicle for Test No. 469468-10-1.

Date: 2018-03-27 Test No.: 469468-10-1 VIN No.: 1C6RD6FT6CS221909

Year: 2012 Make: Dodge Model: RAM 1500

VEHICLE CRUSH MEASUREMENT SHEET[1]

Complete When Applicable	
End Damage	Side Damage
Undeformed end width _____ Corner shift: A1 _____ A2 _____ End shift at frame (CDC) (check one) < 4 inches _____ ≥ 4 inches _____	Bowing: B1 _____ X1 _____ B2 _____ X2 _____ Bowing constant $\frac{X1+X2}{2}$ = _____

Note: Measure C_1 to C_6 from Driver to Passenger Side in Front or Rear impacts – Rear to Front in Side Impacts.

Specific Impact Number	Plane* of C-Measurements	Direct Damage		Field L**	C_1	C_2	C_3	C_4	C_5	C_6	±D
		Width** (CDC)	Max*** Crush								
1	Front plane at bumper ht	16	7	18	7	3.5	2	--	--	--	-35
2	Side plane at bumper ht	16	7	60	1	2	--	--	5	7	+72
	Measurements recorded										
	in inches										

[1]Table taken from National Accident Sampling System (NASS).

*Identify the plane at which the C-measurements are taken (e.g., at bumper, above bumper, at sill, above sill, at beltline, etc.) or label adjustments (e.g., free space).

Free space value is defined as the distance between the baseline and the original body contour taken at the individual C locations. This may include the following: bumper lead, bumper taper, side protrusion, side taper, etc.
Record the value for each C-measurement and maximum crush.

**Measure and document on the vehicle diagram the beginning or end of the direct damage width and field L (e.g., side damage with respect to undamaged axle).

***Measure and document on the vehicle diagram the location of the maximum crush.

Note: Use as many lines/columns as necessary to describe each damage profile.

Table J.10. Occupant Compartment Measurements of Vehicle for Test No. 469468-10-1.

Date:	2018-3-27	Test No.:	469468-10-1	VIN No.:	1C6RD6FT6CS221909
Year:	2012	Make:	DODGE	Model:	RAM 1500

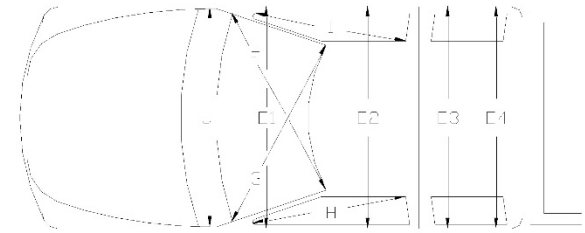

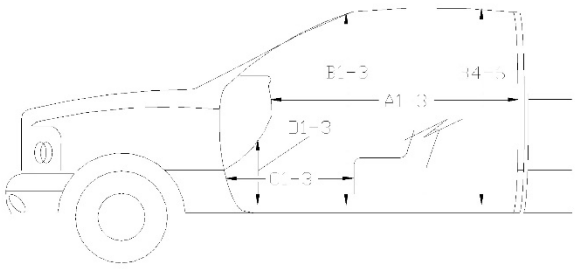

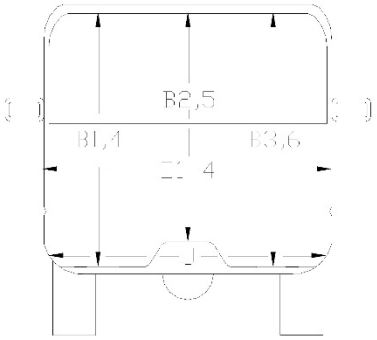

*Lateral area across the cab from driver's side kickpanel to passenger's side kickpanel.

OCCUPANT COMPARTMENT DEFORMATION MEASUREMENT

	Before	After	Differ.
		inches	
A1	65.00	65.00	0.00
A2	63.00	63.00	0.00
A3	65.50	65.50	0.00
B1	45.00	45.00	0.00
B2	38.00	38.00	0.00
B3	45.00	45.00	0.00
B4	39.50	39.50	0.00
B5	43.00	43.00	0.00
B6	39.50	39.50	0.00
C1	6.00	6.00	0.00
C2	-----	-----	-----
C3	26.00	26.00	0.00
D1	11.00	11.00	0.00
D2	-----	-----	-----
D3	11.50	11.50	0.00
E1	58.50	58.50	0.00
E2	63.50	63.50	0.00
E3	63.50	63.50	0.00
E4	63.50	63.50	0.00
F	59.00	59.00	0.00
G	59.00	59.00	0.00
H	37.50	37.50	0.00
I	37.50	37.50	0.00
J*	25.00	25.00	0.00

J.5.2 Sequential Photographs

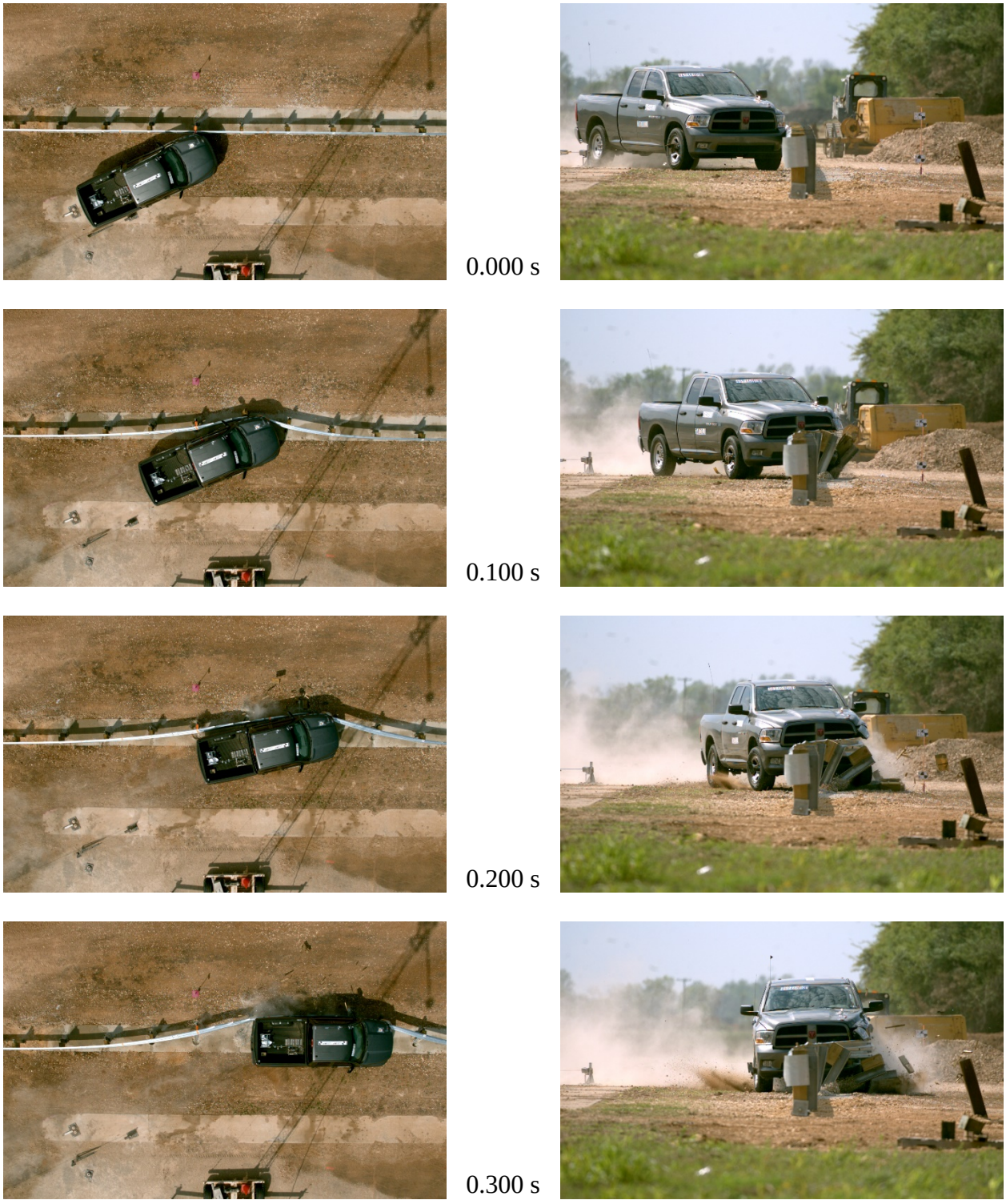

Figure J.10. Sequential Photographs for Test No. 469468-10-1 (Overhead and Frontal Views).

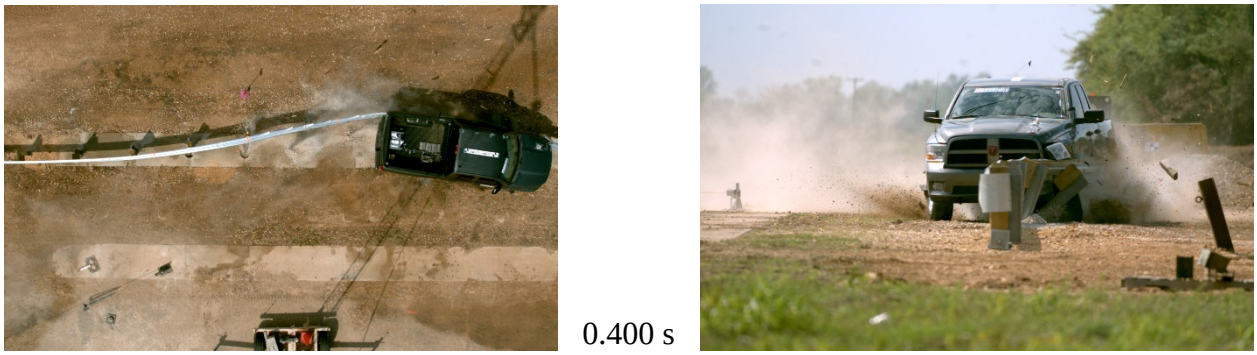
0.400 s


0.500 s


0.600 s

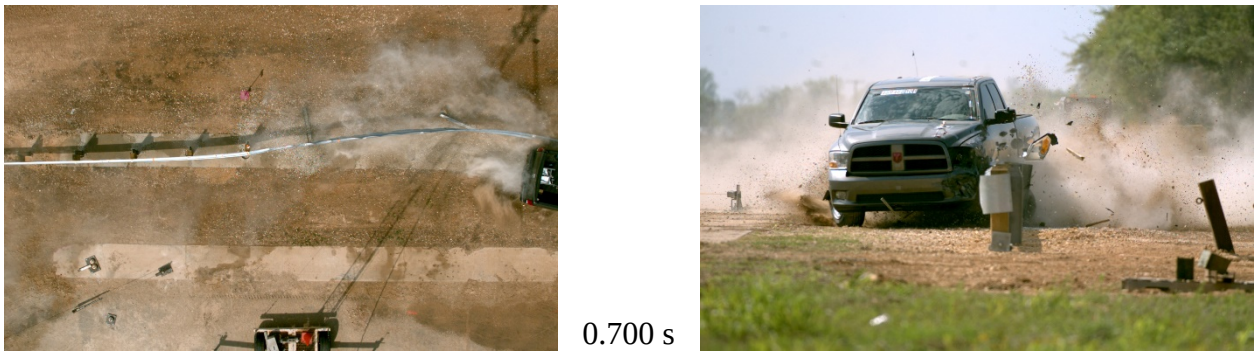
0.700 s

Figure J.10. Sequential Photographs for Test No. 469468-10-1 (Overhead and Frontal Views) (Continued).


0.000 s


0.400 s


0.100 s


0.500 s


0.200 s


0.600 s


0.300 s


0.700 s

Figure J.11. Sequential Photographs for Test No. 469468-10-1 (Rear View).

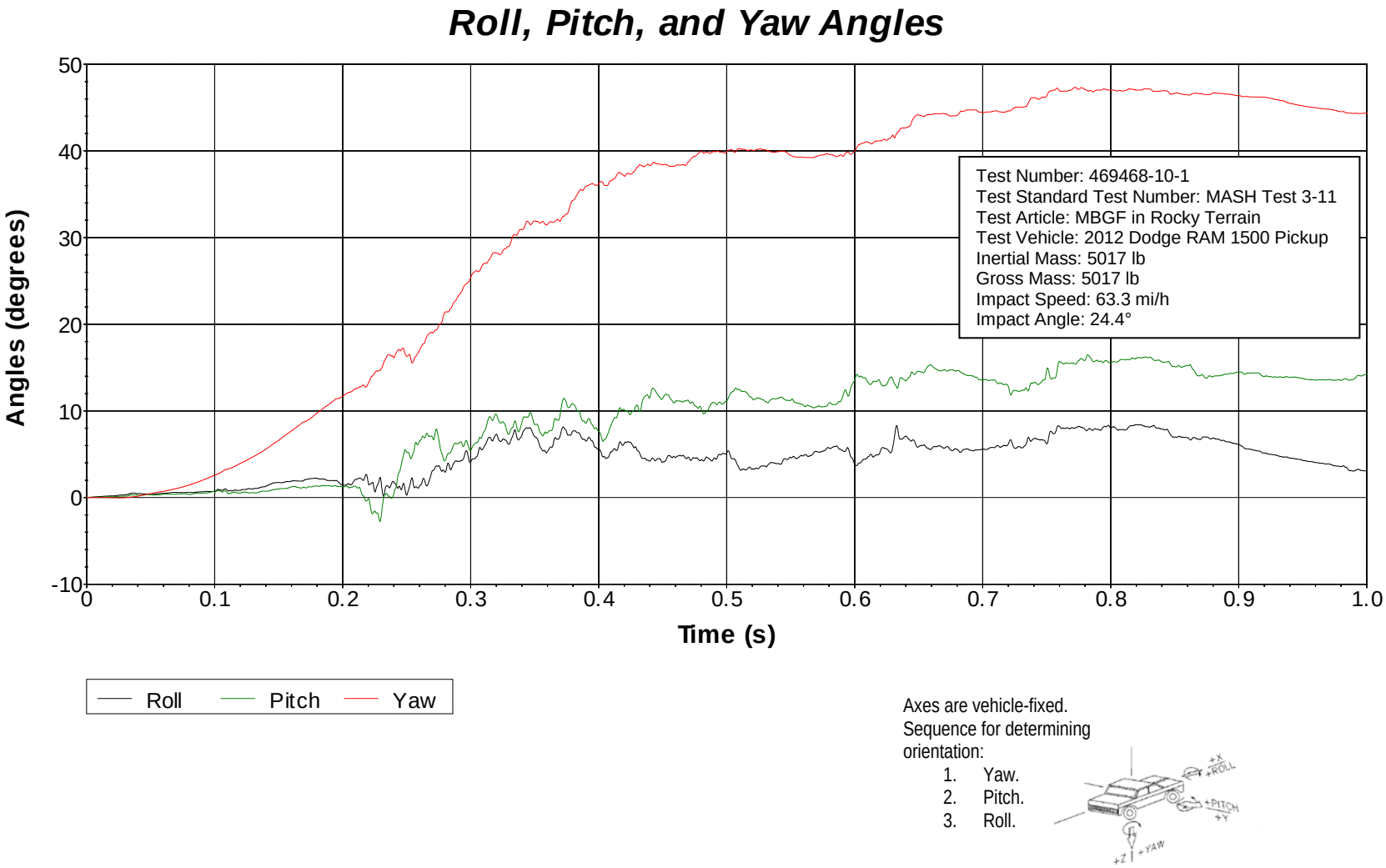

Figure J.12. Vehicle Angular Displacements for Test No. 469468-10-1.

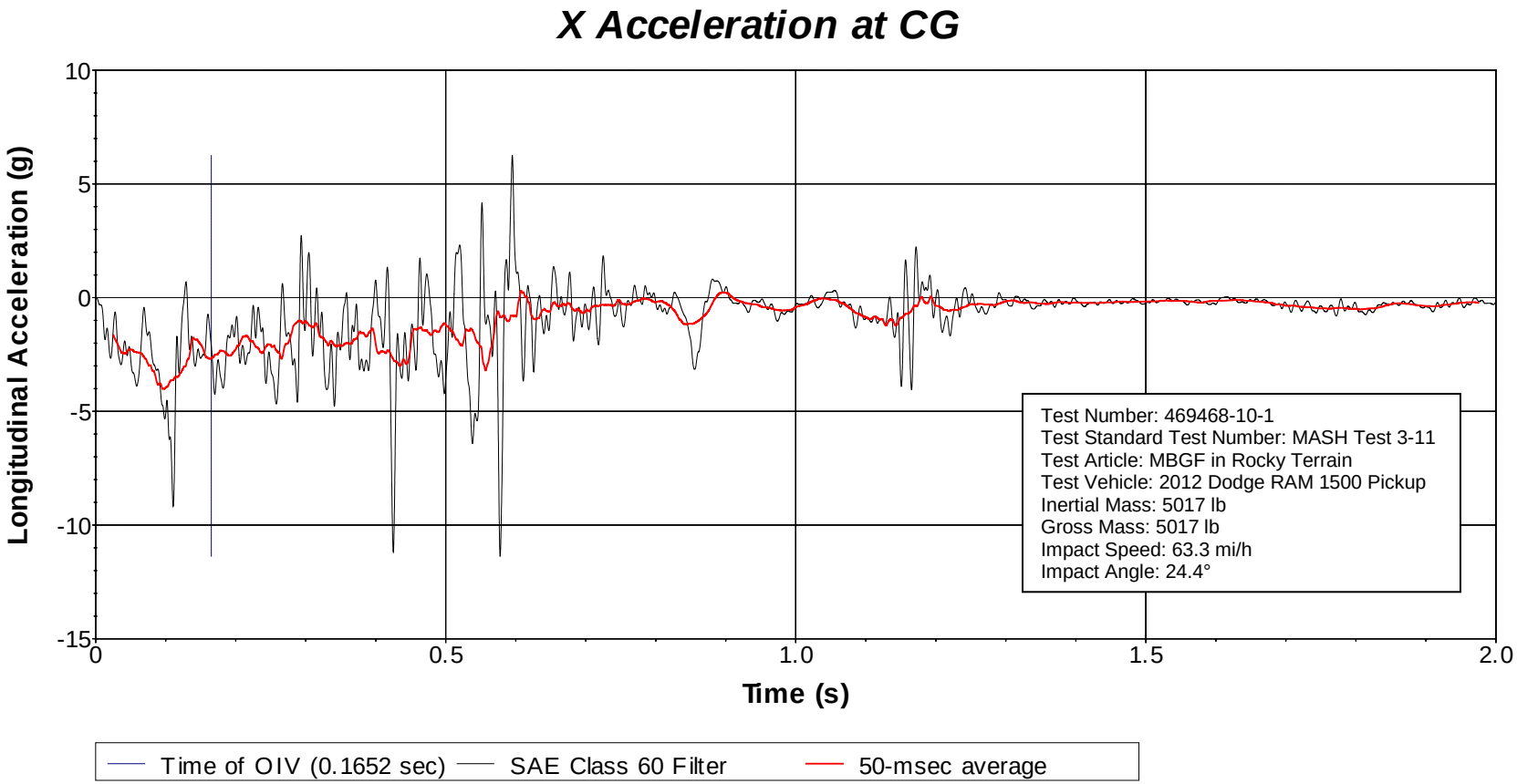

Figure J.13. Vehicle Longitudinal Accelerometer Trace for Test No. 469468-10-1 (Accelerometer Located at Center of Gravity).

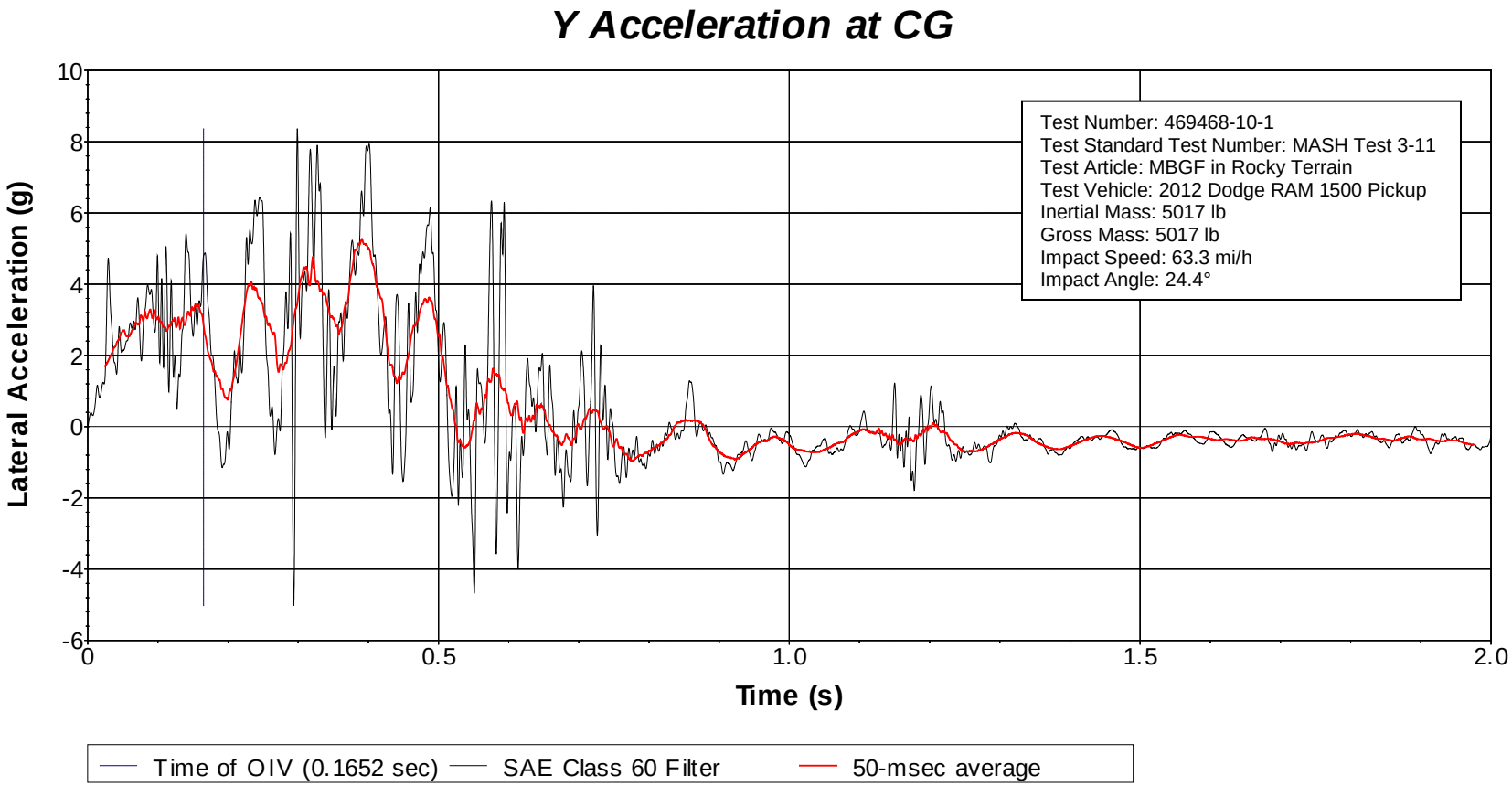

Figure J.14. Vehicle Lateral Accelerometer Trace for Test No. 469468-10-1 (Accelerometer Located at Center of Gravity).

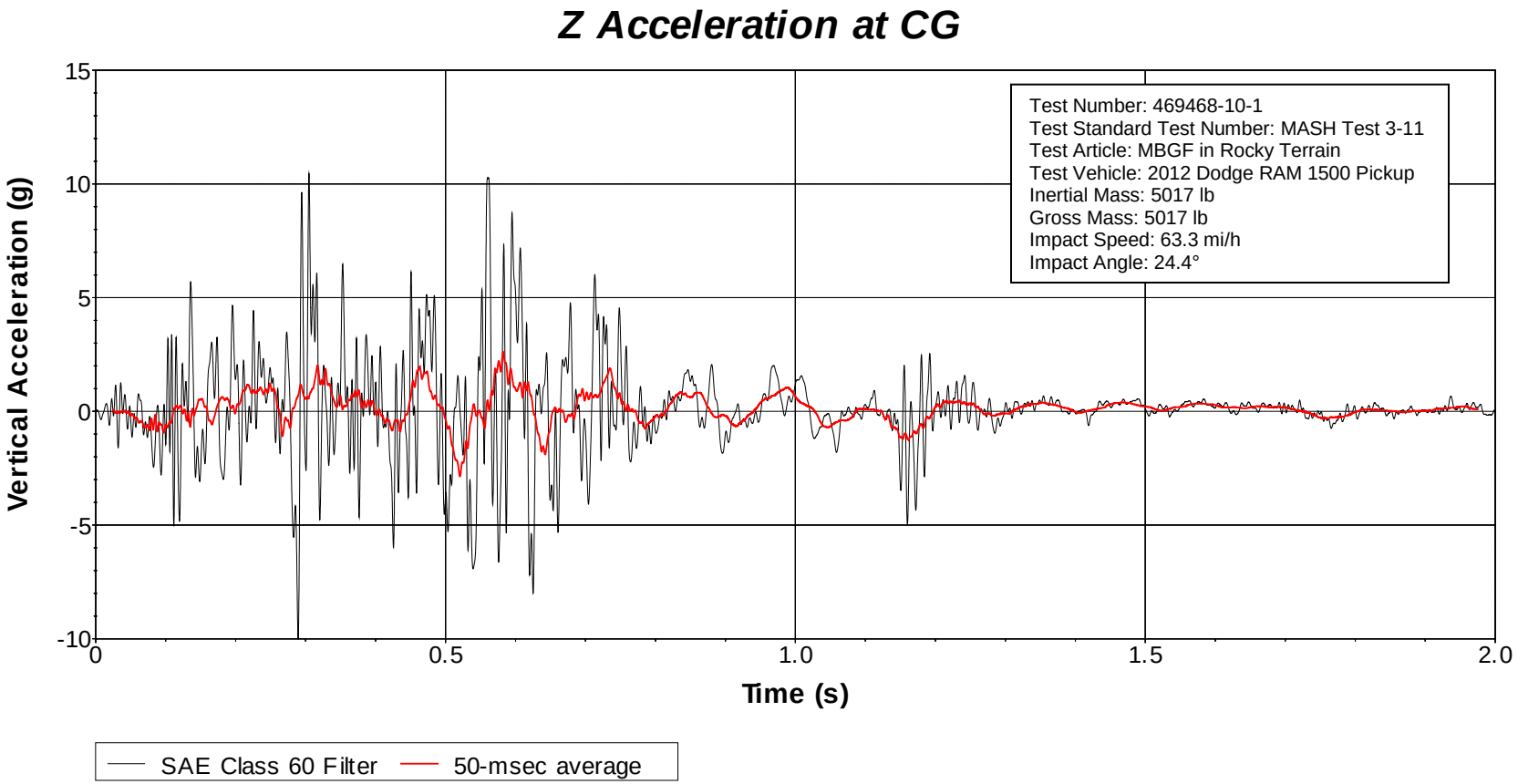

Figure J.15. Vehicle Vertical Accelerometer Trace for Test No. 469468-10-1 (Accelerometer Located at Center of Gravity).

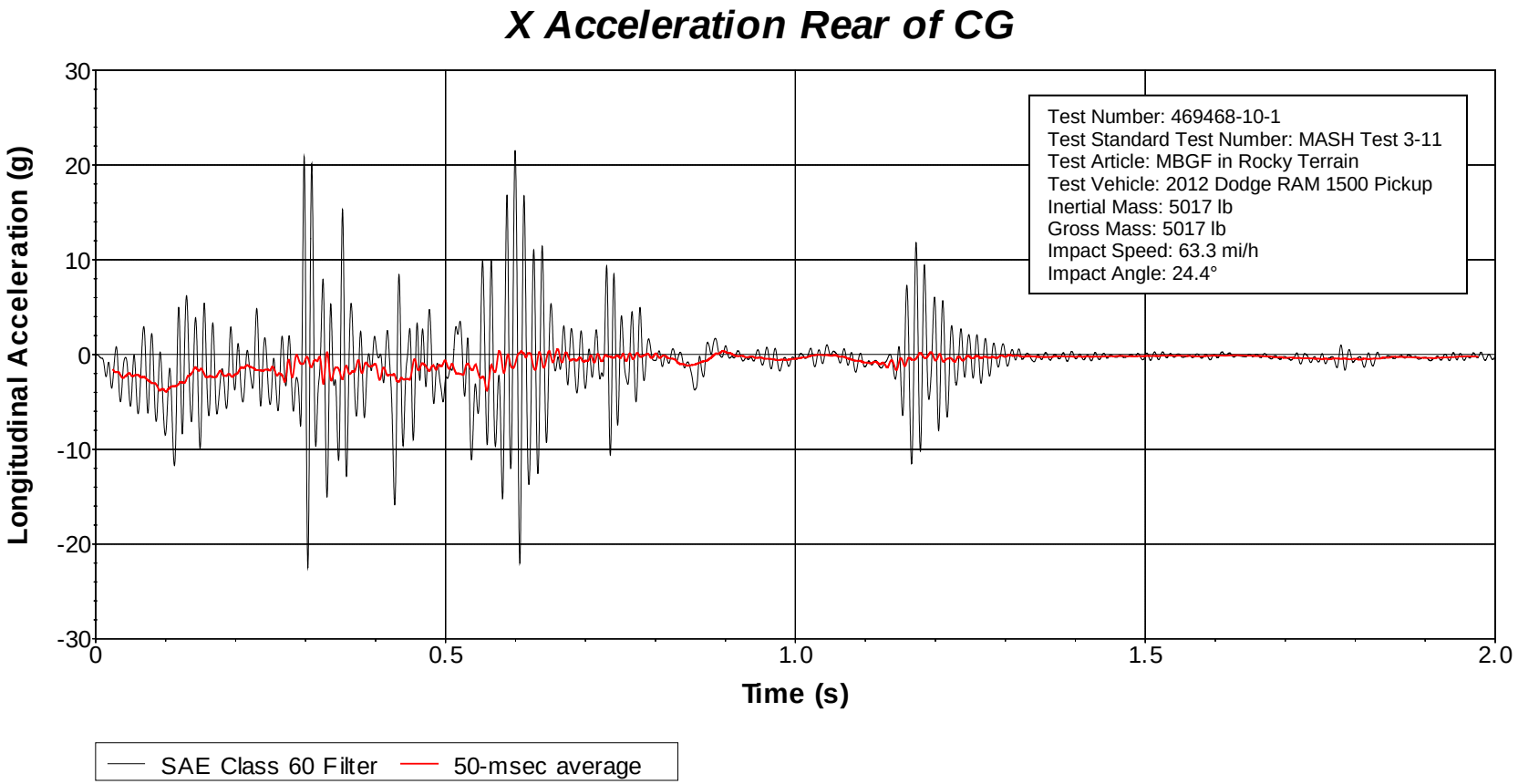

Figure J.16. Vehicle Longitudinal Accelerometer Trace for Test No. 469468-10-1 (Accelerometer Located Rear of Center of Gravity).

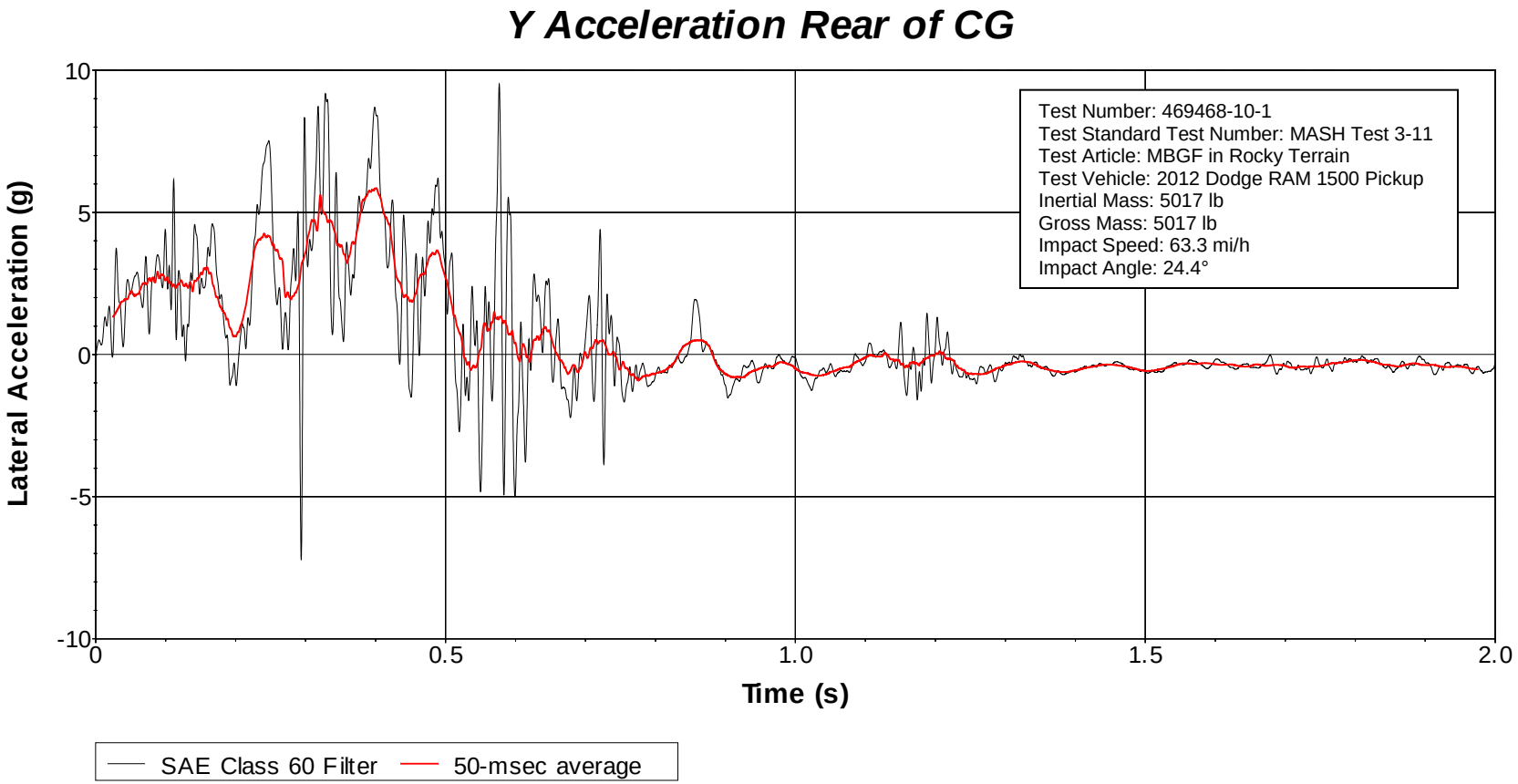

Figure J.17. Vehicle Lateral Accelerometer Trace for Test No. 469468-10-1 (Accelerometer Located Rear of Center of Gravity).

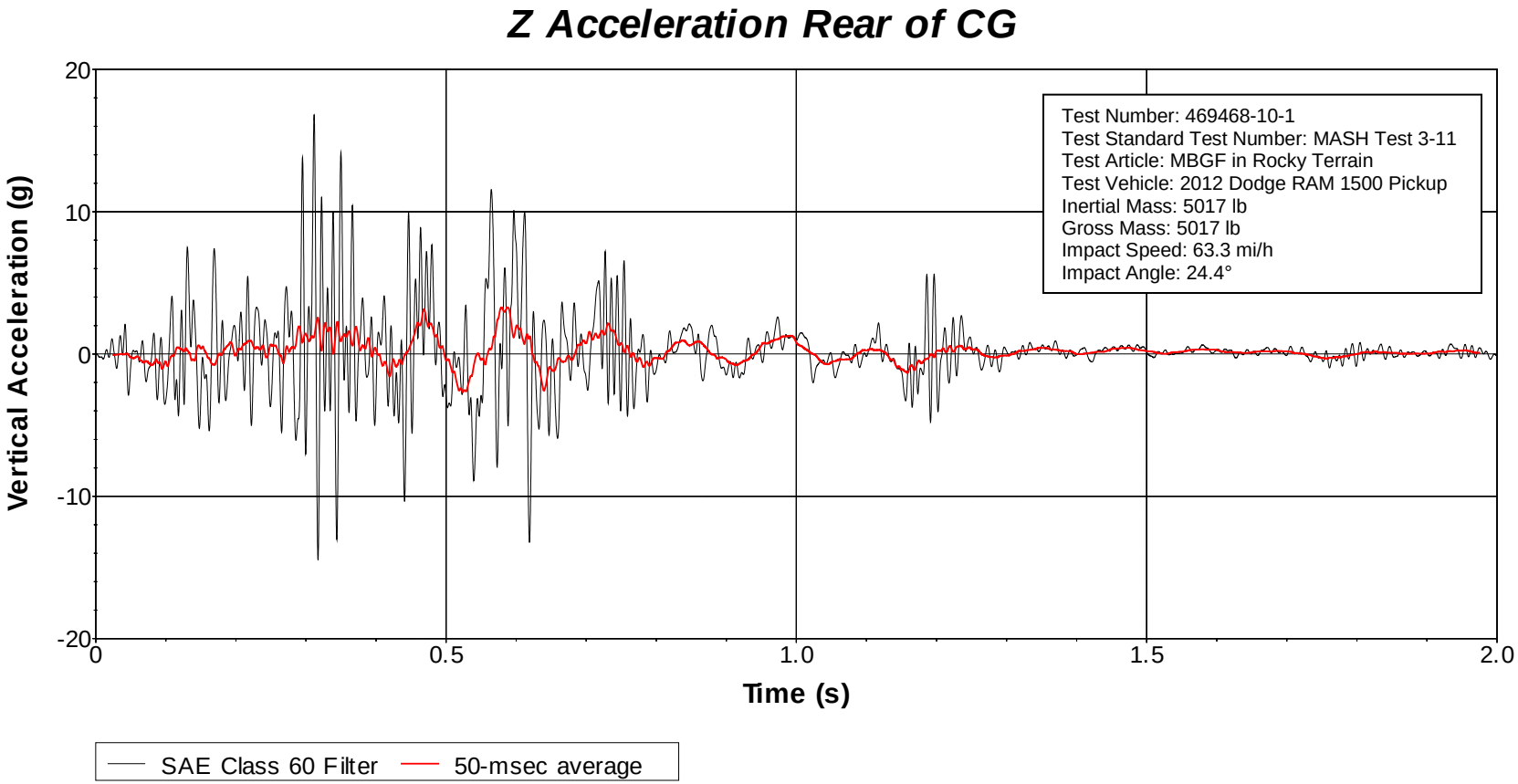

Figure J.18. Vehicle Vertical Accelerometer Trace for Test No. 469468-10-1 (Accelerometer Located Rear of Center of Gravity).

APPENDIX K. ROUND WOOD POST W-BEAM GUARDRAIL

K.1 DETAILS OF THE SYSTEM

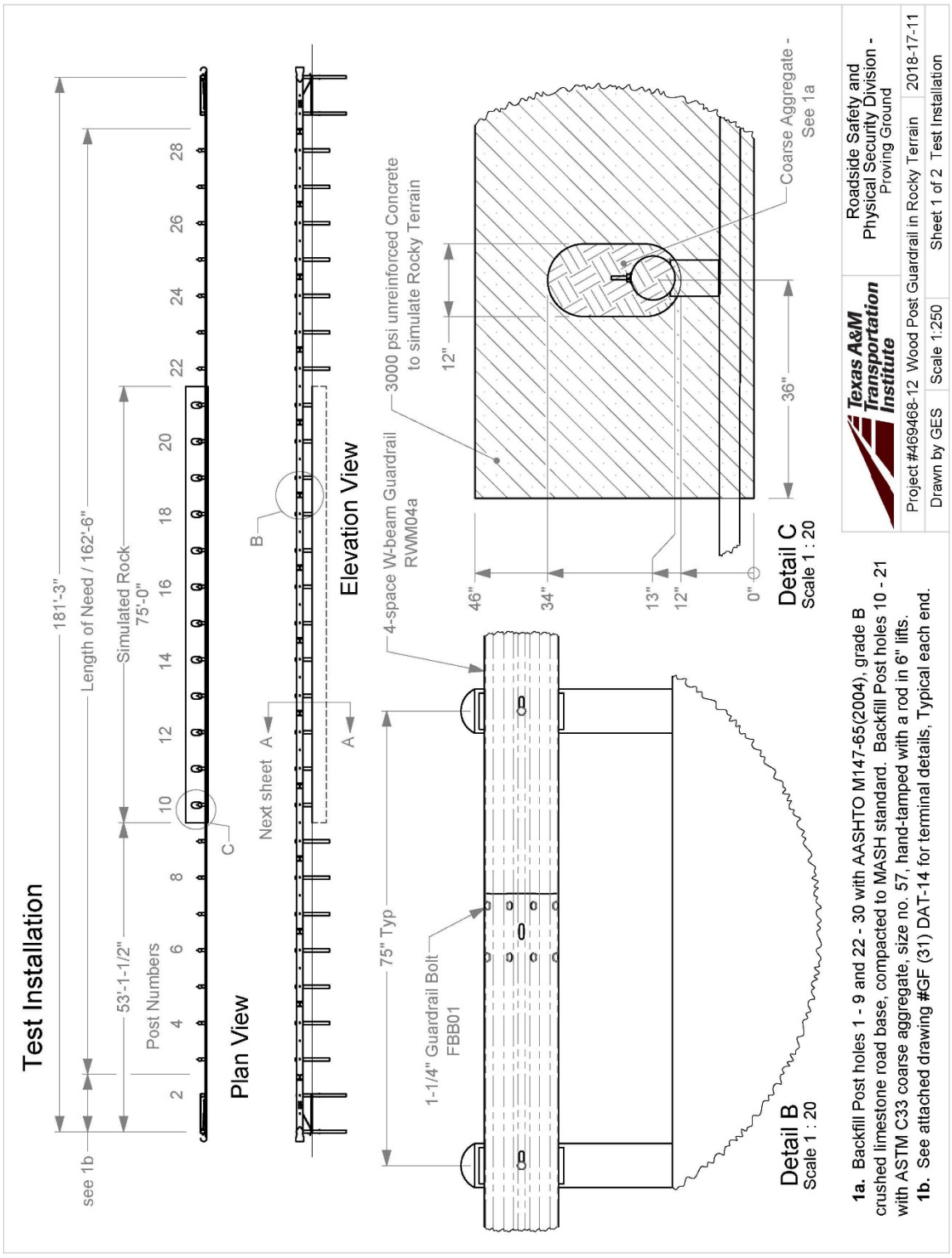

2a. 58-3/4" Timber Post is typical at Simulated Rock (Posts 10 - 21). 71" Timber Posts at other LON locations.

2b. Cut off bolts after installation, leaving less than 1" protruding past nut.

Texas A&M Transportation Institute	Roadside Safety and Physical Security Division - Proving Ground	
Project #469468-12 Wood Post Guardrail in Rocky Terrain		2018-17-11
Drawn by GES	Scale 1:20	Sheet 2 of 2 Cross Section

T:\1-ProjectFiles\469468 - TxDOT - Bligh\-12 Rocky Terrain-Wood Posts\Drafting, 469468-12\469468-12 Drawing

NOTES: 1. ALL FILLETS SHALL HAVE A MINIMUM RADIUS OF 1/16 [2].
2. IF THE BOLT EXTENDS MORE THAN 1/4 [6] FROM THE NUT THE BOLT SHOULD BE TRIMMED BACK.

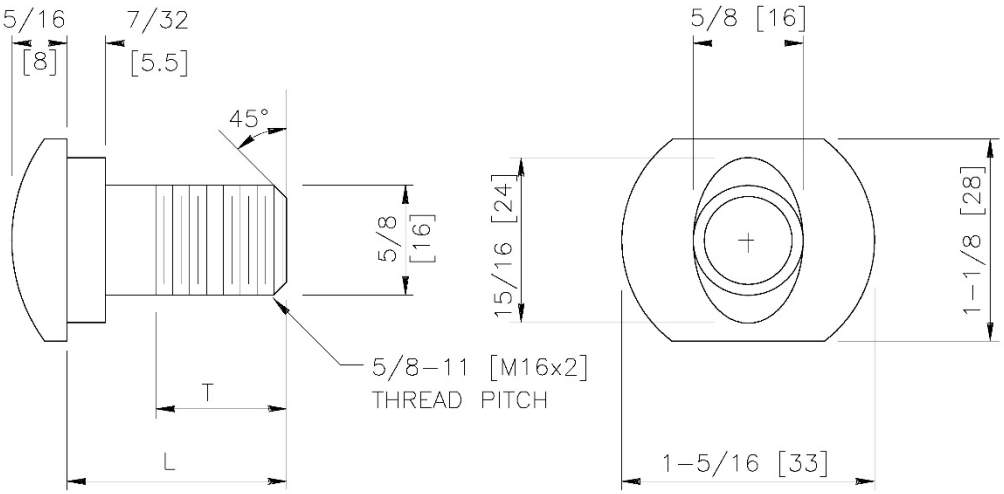

DESIGNATOR	L	T (MIN)
FBB01	1–1/4 [35]	1–1/8 [30]
FBB02	2 [50]	1–3/4 [45]
FBB03	10 [255]	4 [100]
FBB04	18 [460]	4 [100]
FBB05	25 [640]	4 [100]

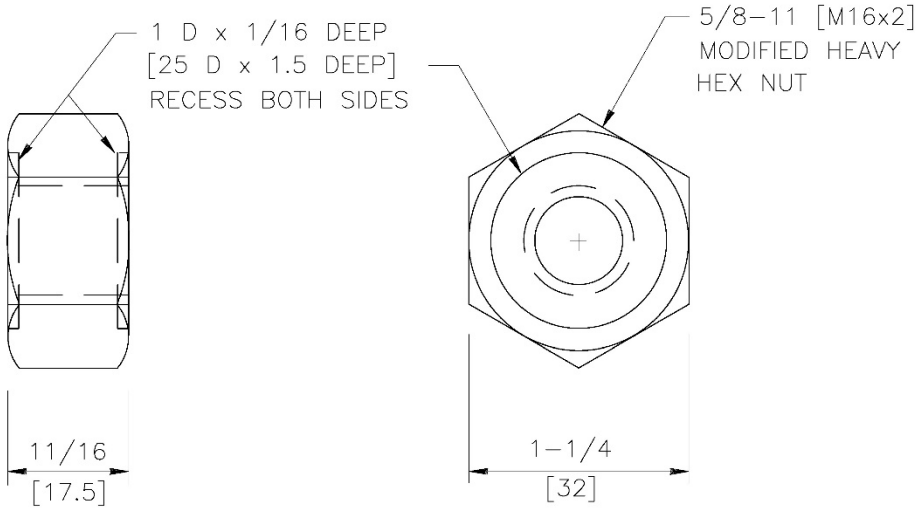

1976

GUARDRAIL BOLT AND RECESSED NUT

FBB01–05

SHEET NO.	DATE:
1 of 2	6/30/2005

SPECIFICATIONS

The geometry and material specifications for this oval shoulder button-headed bolt and hex nut are found in AASHTO M 180. The bolt shall have 5/8-11 [M16x2] threads as defined in ANSI B1.1 [ANSI B1.13M] for Class 2A [6g] tolerances. Bolt material shall conform to ASTM A307 Grade A [ASTM F 568M Class 4.6], with a tensile strength of 60 ksi [400 MPa] and yield strength of 36 ksi [240 MPa]. Material for corrosion-resistant bolts shall conform to ASTM A325 Type 3 [ASTM F 568M Class 8.8.3], with tensile strength of 120 ksi [830 MPa] and yield strength of 92 ksi [660 MPa]. This bolt material has corrosion resistance comparable to ASTM A588 steels. Metric zinc-coated bolt heads shall be marked as specified in ASTM F 568 Section 9 with the symbol "4.6."

Nuts shall have ANSI B1.1 Class 2B [ANSI B1.13M Class 6h] 5/8-11 [M16x2] threads. The geometry of the nuts, with the exception of the recess shown in the drawing, shall conform to ANSI B18.2.2 [ANSI B18.2.4.1M Style 1] for zinc-coated hex nuts (shown in drawing) and ANSI B18.2.2 [ANSI B18.2.4.6M] for heavy hex corrosion-resistant nuts (not shown in drawing). Material for zinc-coated nuts shall conform to the requirements of AASHTO M 291 (ASTM A 563) Grade A [AASHTO M 291M (ASTM A 563M) Class 5], and material for corrosion-resistant nuts shall conform to the requirements of AASHTO M 291 (ASTM A 563) Grade C3 [AASHTO M 291M (ASTM A 563M) Class 8S3].

When zinc-coated bolts and nuts are required, the coating shall conform to either AASHTO M 232 (ASTM A 153/A 153M) for Class C or AASHTO M 298 (ASTM B 695) for Class 50. Zinc-coated nuts shall be tapped over-size as specified in AASHTO M 291 (ASTM A 563) [AASHTO M 291M (ASTM A 563M)], except that a diametrical allowance of 0.020 inch [0.510 mm] shall be used instead of 0.016 inches [0.420 mm].

Designator	Stress Area of Threaded Bolt Shank (in^2 [mm^2])	Min. Bolt Tensile Strength (kips [kN])
FBB01-05	0.226 [157.0]	13.6 [62.8]

Dimensional tolerances not shown or implied are intended to be those consistent with the proper functioning of the part, including its appearance and accepted manufacturing practices.

INTENDED USE

These bolts and nuts are used in numerous guardrail and median barrier designs.

GUARDRAIL BOLT AND RECESSED NUT

FBB01-05	
SHEET NO.	DATE
2 of 2	6/30/2005

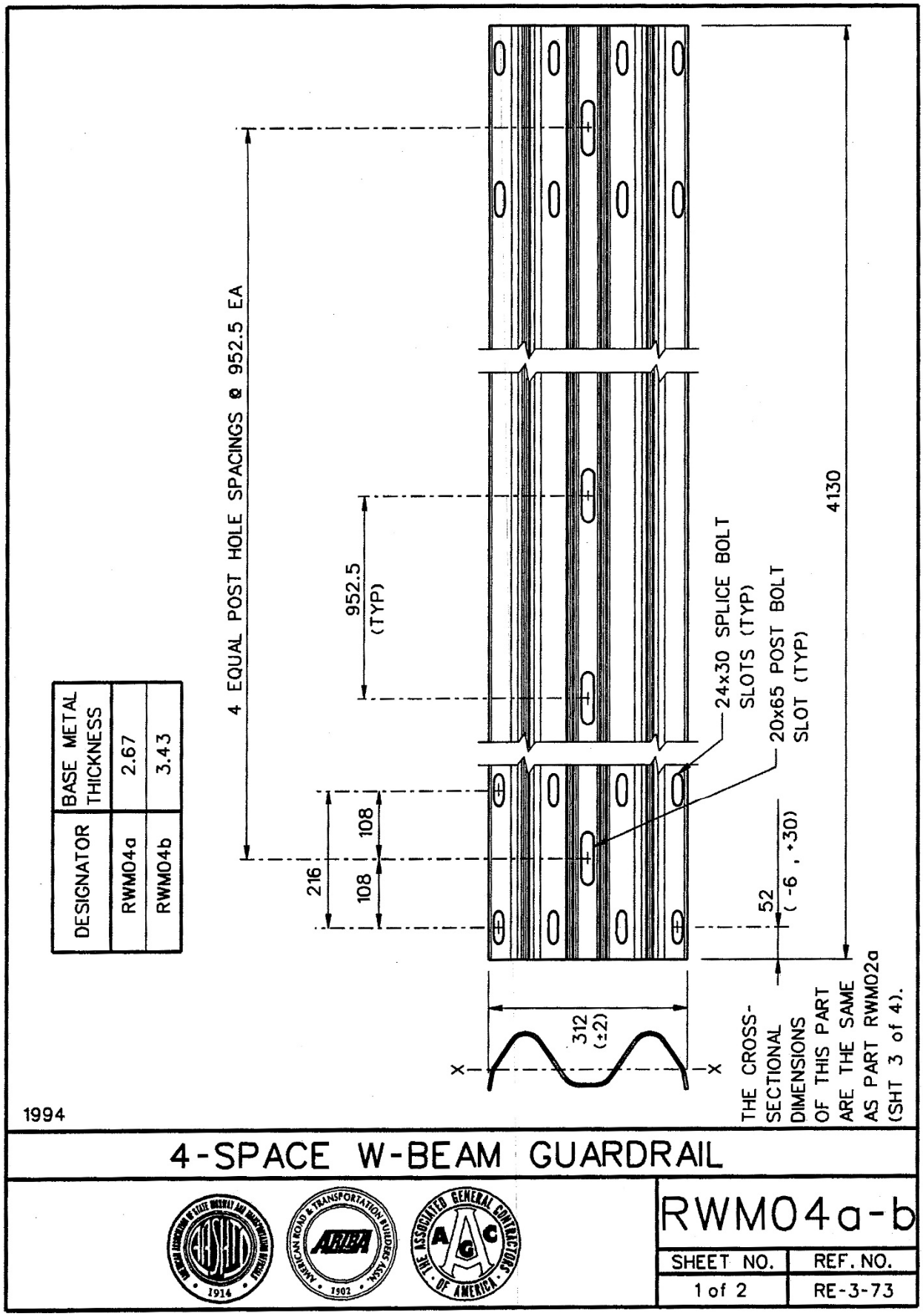

DESIGNATOR	BASE METAL THICKNESS
RWM04a	2.67
RWM04b	3.43

4-SPACE W-BEAM GUARDRAIL

RWM04a-b

SHEET NO.	REF. NO.
1 of 2	RE-3-73

SPECIFICATIONS

Corrugated sheet steel beams shall conform to the current requirements of AASHTO M180. The section shall be manufactured from sheets with a nominal width of 483 mm. Guardrail RWM04a shall conform to AASHTO M180 Class A and RWM04b shall conform to Class B. Corrosion protection may be either Type II (zinc-coated) or Type IV (corrosion resistant steel). Corrosion resistant steel should conform to ASTM A606 for Type IV material and shall not be zinc-coated, painted or otherwise treated. Inertial properties are calculated for the whole cross-section without a reduction for the splice bolt holes.

Designator	Area (10^3 mm^2)	I_x (10^6 mm^4)	I_y (10^6 mm^4)	S_x (10^3 mm^3)	S_y (10^3 mm^3)
RWM04a-b	1.3	1.0	--	23	--

Dimensional tolerances not shown or implied are intended to be those consistent with the proper functioning of the part, including its appearance and accepted manufacturing practices.

INTENDED USE

This corrugated sheet steel beam is used as a rail element in transition systems STB02 and STB03 or when a reduced post spacing is desired in the SGR02, SGR04a-b, SGM02, and SGM04a-b.

4-SPACE W-BEAM GUARDRAIL

RWM04a-b

SHEET NO.	DATE
2 of 2	04-01-95

Table K.1. Summary of Strong Soil Test Results for Establishing Installation Procedure.

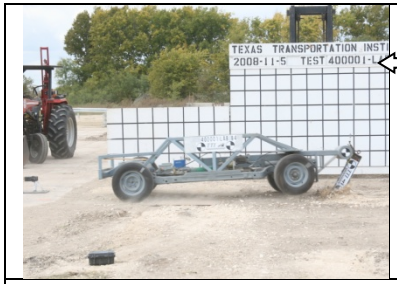

Dynamic Setup

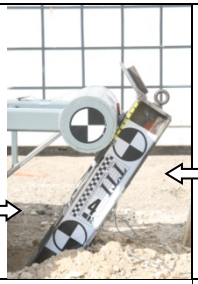

Post-Test Photo of post

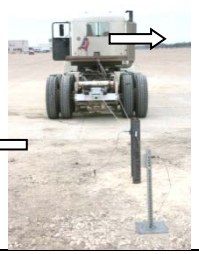

Post-Test Photo

Static Load Test



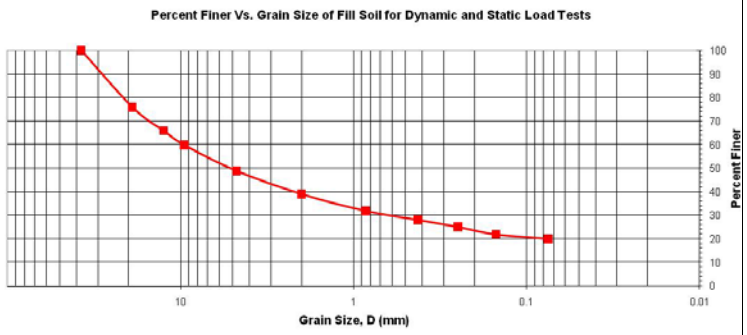

Dynamic Test Installation Details

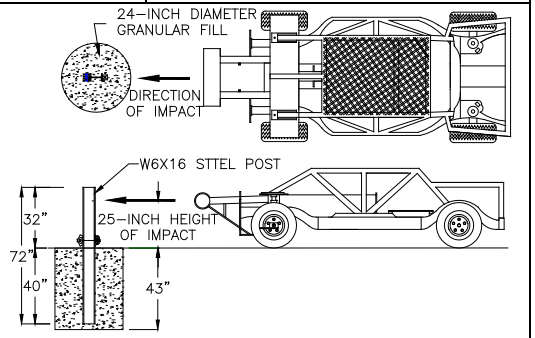

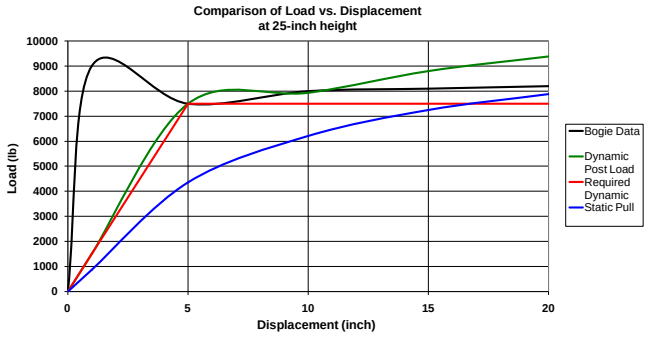

Static Load Test Installation Details

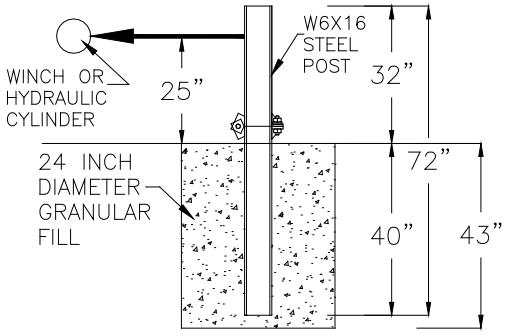

Date	2008-11-05
Test Facility and Site Location	TTI Proving Ground, 3100 SH 47, Bryan, TX 77807
In Situ Soil Description (ASTM D2487	Sandy gravel with silty fines
Fill Material Description (ASTM D2487) and sieve analysis	AASHTO Grade B Soil-Aggregate (see sieve analysis above)
Description of Fill Placement Procedure	6-inch lifts tamped with a pneumatic compactor
Bogie Weight	5009 lb
Impact Velocity	20.5 mph

Table K.2. Test Day Static Soil Strength Documentation for Test No. 469468-12-1.

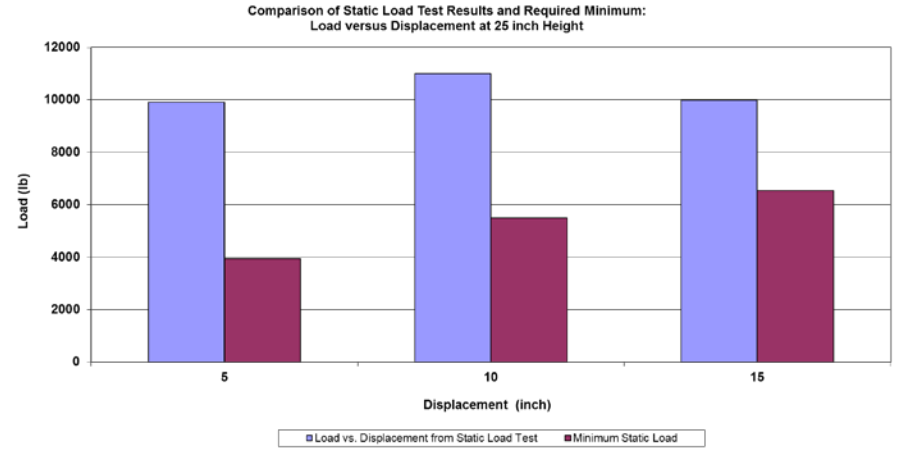



Static Load Setup

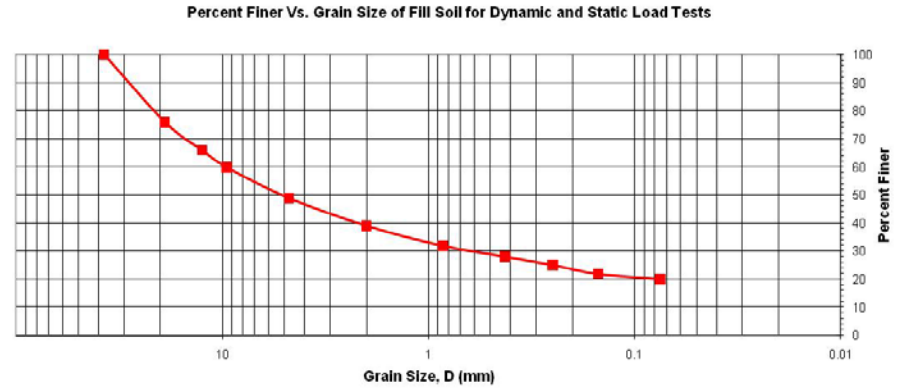



Post-Test Photo of Post

Date	2018-08-21
Test Facility and Site Location	TTI Proving Ground – 3100 SH 47, Bryan, Tx
In Situ Soil Description (ASTM D2487)	Sandy gravel with silty fines
Fill Material Description (ASTM D2487) and sieve analysis	AASHTO Grade B Soil-Aggregate (see sieve analysis)
Description of Fill Placement Procedure	6-inch lifts tamped with a pneumatic compactor

K.3 VEHICLE PROPERTIES AND INFORMATION

Table K.3. Vehicle Properties for Test No. 469468-12-1.

Date: 2018-08-21 Test No.: 469468-12-1 VIN No.: 1C6RRGTODS501729

Year: 2013 Make: RAM Model: 1500

Tire Size: 265/70 R 17 Tire Inflation Pressure: 35 psi

Tread Type: Highway Odometer: 175461

Note any damage to the vehicle prior to test: None

● Denotes accelerometer location.

NOTES: None

Engine Type: V-8
Engine CID: 4.7 liter

Transmission Type:
☑ Auto or ☐ Manual
☐ FWD ☑ RWD ☐ 4WD

Optional Equipment:
None

Dummy Data:
Type: No Dummy
Mass: 0 lb
Seat Position: NA

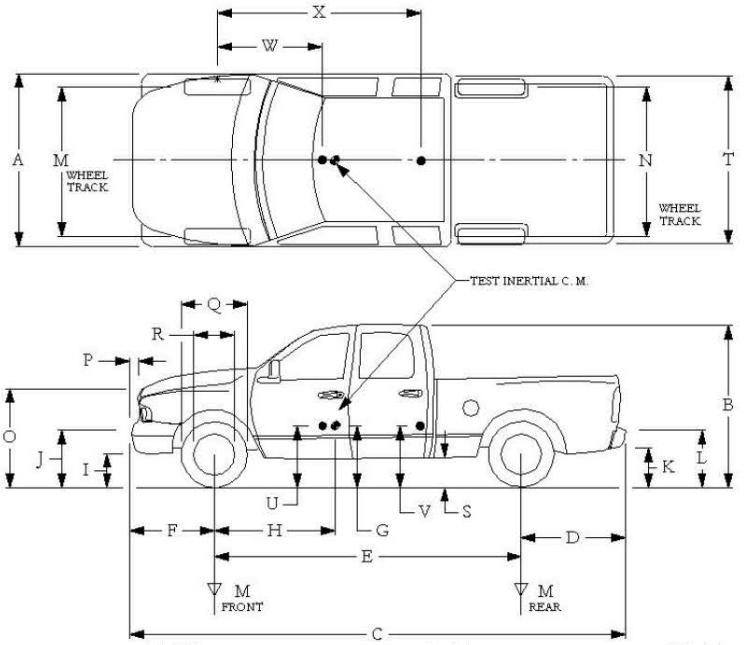

Geometry: inches

A	78.50	F	40.00	K	20.00	P	3.00	U	26.00
B	74.00	G	28.80	L	30.00	Q	30.50	V	30.00
C	227.50	H	60.98	M	68.50	R	18.00	W	60.98
D	44.00	I	11.75	N	68.00	S	13.00	X	78.00
E	140.50	J	27.00	O	46.00	T	77.00		

Wheel Center Height Front	14.75	Wheel Well Clearance (Front)	6.00	Bottom Frame Height - Front	12.50
Wheel Center Height Rear	14.75	Wheel Well Clearance (Rear)	9.25	Bottom Frame Height - Rear	22.50

RANGE LIMIT: A=78 ±2 inches; C=237 ±13 inches; E=148 ±12 inches; F=39 ±3 inches; G = > 28 inches; H = 63 ±4 inches; O=43 ±4 inches; M+N/2=67 ±1.5 inches

GVWR Ratings:		**Mass:** lb	Curb	Test Inertial	Gross Static
Front	3700	M_{front}	2924	2840	2840
Back	3900	M_{rear}	2106	2178	2178
Total	6700	M_{Total}	5030	5018	5018

(Allowable Range for TIM and GSM = 5000 lb ±110 lb)

Mass Distribution:
lb LF: 1437 RF: 1403 LR: 1068 RR: 1110

Table K.4. Measurements of Vehicle Vertical CG for Test No. 469468-12-1.

Date: 2018-08-21 Test No.: 469468-12-1 VIN: 1C6RRGTODS501729

Year: 2013 Make: DODGE Model: RAM 1500

Body Style: Quad Cab Mileage: 175461

Engine: 4.7 liter V-8 Transmission: Automatic

Fuel Level: Empty Ballast: 114 (440 lb max)

Tire Pressure: Front: 35 psi Rear: 35 psi Size: 265/70 R 17

Measured Vehicle Weights: (lb)

LF:	1437	RF:	1403	Front Axle:	2840
LR:	1068	RR:	1110	Rear Axle:	2178
Left:	2505	Right:	2513	Total:	5018
					5000 ±110 lb allowed

Wheel Base: 140.50 inches (148 ±12 inches allowed) Track: F: 68.50 inches R: 68.00 inches (Track = (F+R)/2 = 67 ±1.5 inches allowed)

Center of Gravity, SAE J874 Suspension Method

X:	60.98 inches	Rear of Front Axle	(63 ±4 inches allowed)
Y:	0.05 inches	Left - Right +	of Vehicle Centerline
Z:	28.80 inches	Above Ground	(minumum 28.0 inches allowed)

Hood Height: 46.00 inches (43 ±4 inches allowed) Front Bumper Height: 27.00 inches

Front Overhang: 40.00 inches (39 ±3 inches allowed) Rear Bumper Height: 30.00 inches

Overall Length: 227.50 inches (237 ±13 inches allowed)

Table K.5. Exterior Crush Measurements of Vehicle for Test No. 469468-12-1.

Date:	2018-08-21	Test No.:	469468-12-1	VIN No.:	1C6RRGTODS501729
Year:	2013	Make:	RAM	Model:	1500

VEHICLE CRUSH MEASUREMENT SHEET[1]

Complete When Applicable	
End Damage	Side Damage
Undeformed end width _____	Bowing: B1 _____ X1 _____
Corner shift: A1 _____	B2 _____ X2 _____
A2 _____	
End shift at frame (CDC)	Bowing constant
(check one)	$\frac{X1+X2}{2}$ = _____
< 4 inches _____	
≥ 4 inches _____	

Note: Measure C_1 to C_6 from Driver to Passenger Side in Front or Rear Impacts – Rear to Front in Side Impacts.

Specific Impact Number	Plane* of C-Measurements	Direct Damage		Field L***	C_1	C_2	C_3	C_4	C_5	C_6	±D
		Width** (CDC)	Max**** Crush								
1	Front plane at bumper	15	16	44	10	9	8	16	10	3	0
2	Side plane at bumper	15	15	51	1.5	2	--	--	13	15	+65
	Measurements recorded										
	☑ inches or ☐ mm										

[1]Table taken from National Accident Sampling System (NASS).

*Identify the plane at which the C-measurements are taken (e.g., at bumper, above bumper, at sill, above sill, at beltline, etc.) or label adjustments (e.g., free space).

Free space value is defined as the distance between the baseline and the original body contour taken at the individual C locations. This may include the following: bumper lead, bumper taper, side protrusion, side taper, etc. Record the value for each C-measurement and maximum crush.

**Measure and document on the vehicle diagram the beginning or end of the direct damage width and field L (e.g., side damage with respect to undamaged axle).

***Measure and document on the vehicle diagram the location of the maximum crush.

Note: Use as many lines/columns as necessary to describe each damage profile.

Table K.6. Occupant Compartment Measurements of Vehicle for Test No. 469468-12-1.

Date:	2018-08-21	Test No.:	469468-12-1	VIN No.:	1C6RRGTODS501729
Year:	2013	Make:	RAM	Model:	1500

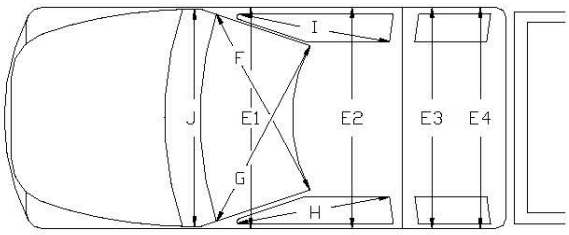

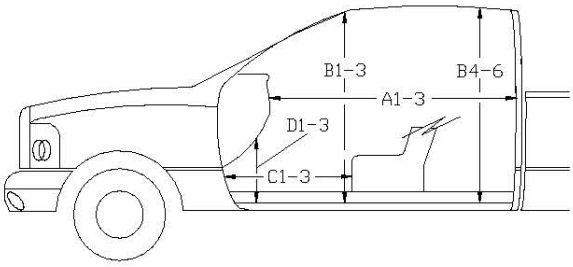

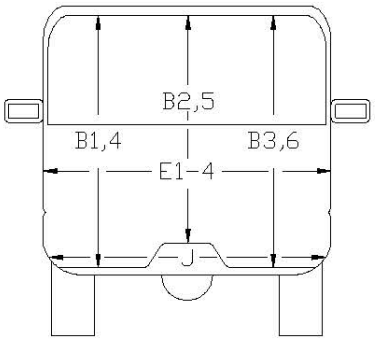

*Lateral area across the cab from driver's side kickpanel to passenger's side kickpanel.

OCCUPANT COMPARTMENT DEFORMATION MEASUREMENT

	Before	After (inches)	Differ.
A1	65.00	65.00	0.00
A2	63.00	63.00	0.00
A3	65.50	65.50	0.00
B1	45.00	45.00	0.00
B2	38.00	38.00	0.00
B3	45.00	45.00	0.00
B4	39.50	39.50	0.00
B5	43.00	43.00	0.00
B6	39.50	39.50	0.00
C1	26.00	26.00	0.00
C2	0.00	0.00	0.00
C3	26.00	26.00	0.00
D1	11.00	11.00	0.00
D2	0.00	0.00	0.00
D3	11.50	11.50	0.00
E1	58.50	58.50	0.00
E2	63.50	63.50	0.00
E3	63.50	63.50	0.00
E4	63.50	63.50	0.00
F	59.00	59.00	0.00
G	59.00	59.00	0.00
H	37.50	37.50	0.00
I	37.50	37.50	0.00
J*	25.00	25.00	0.00

K.4 SEQUENTIAL PHOTOGRAPHS

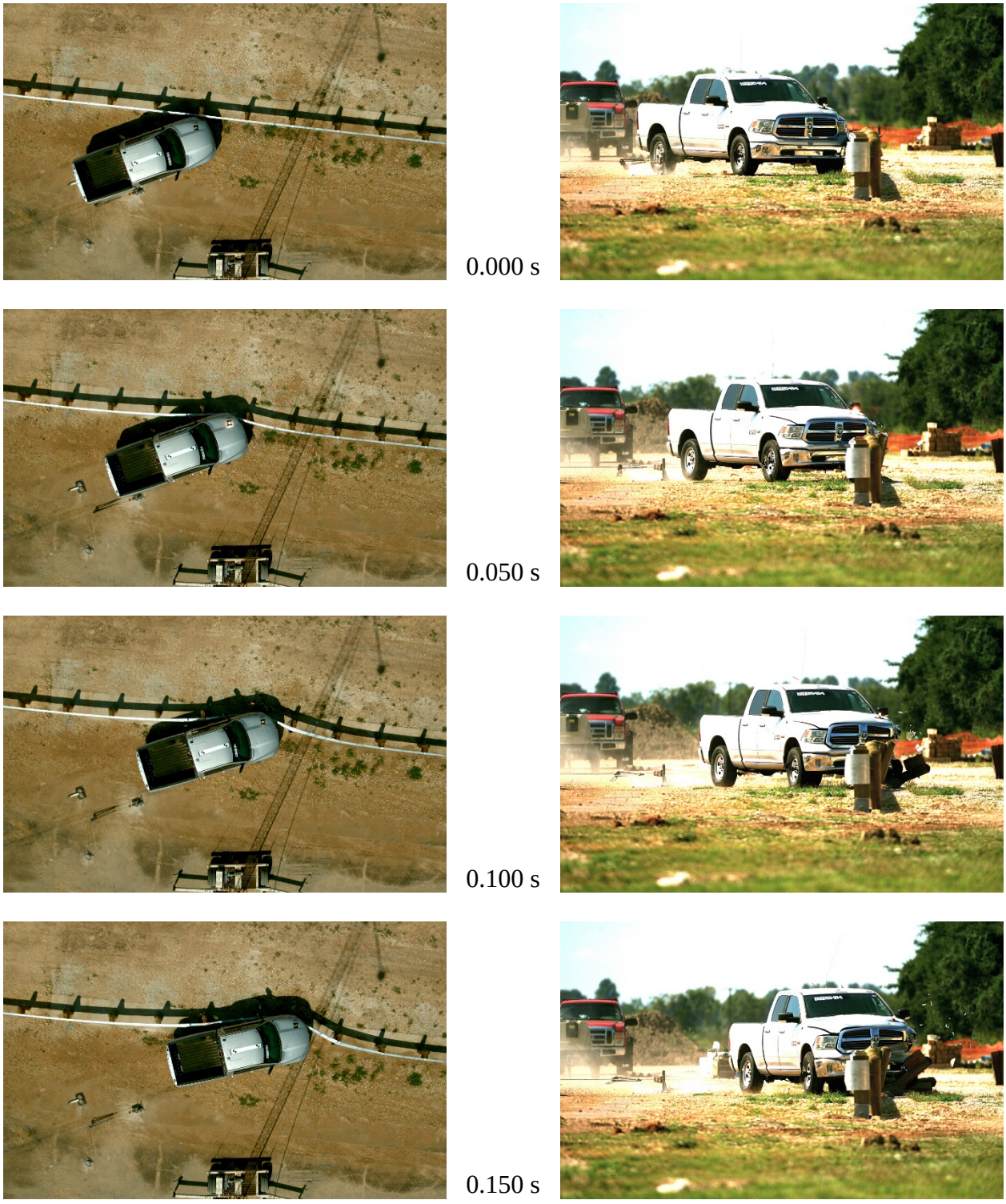

Figure K.1. Sequential Photographs for Test No. 469468-12-1 (Overhead and Frontal Views).


0.200 s

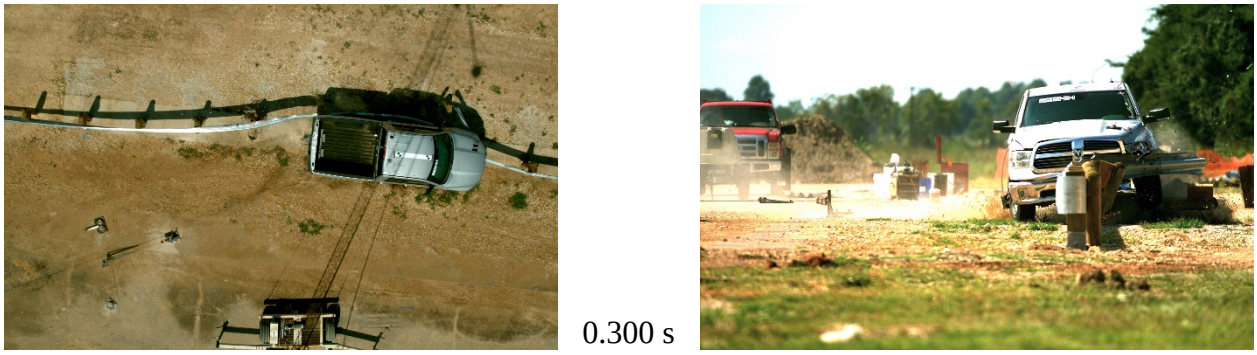
0.300 s

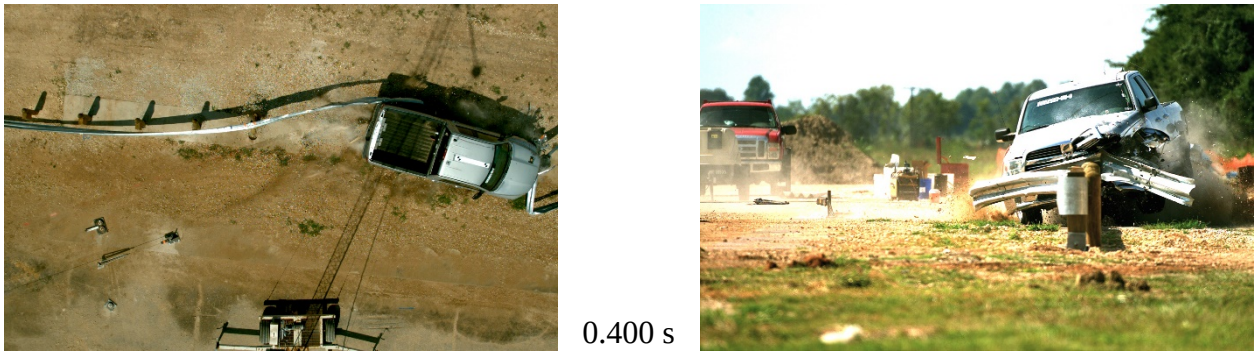
0.400 s

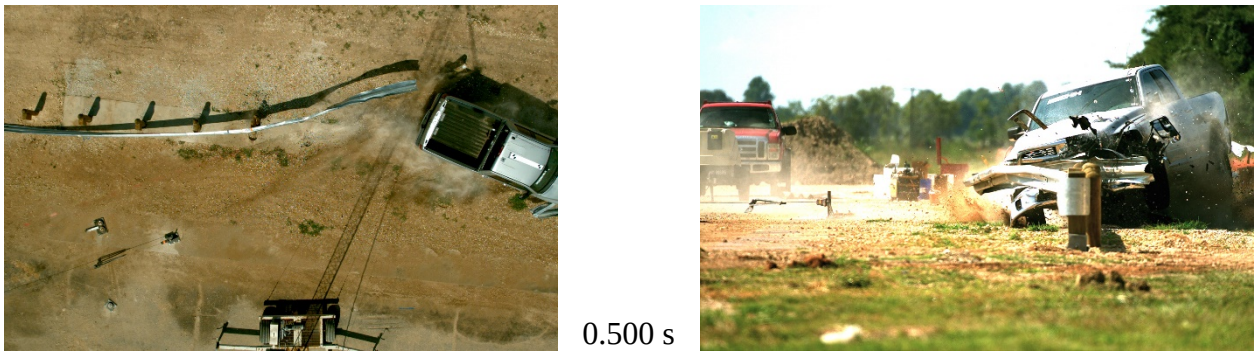
0.500 s

Figure K.1. Sequential Photographs for Test No. 469468-12-1 (Overhead and Frontal Views) (Continued).



0.000 s



0.200 s



0.050 s



0.300 s



0.100 s



0.400 s



0.150 s



0.500 s

Figure K.2. Sequential Photographs for Test No. 469468-12-1 (Rear View).

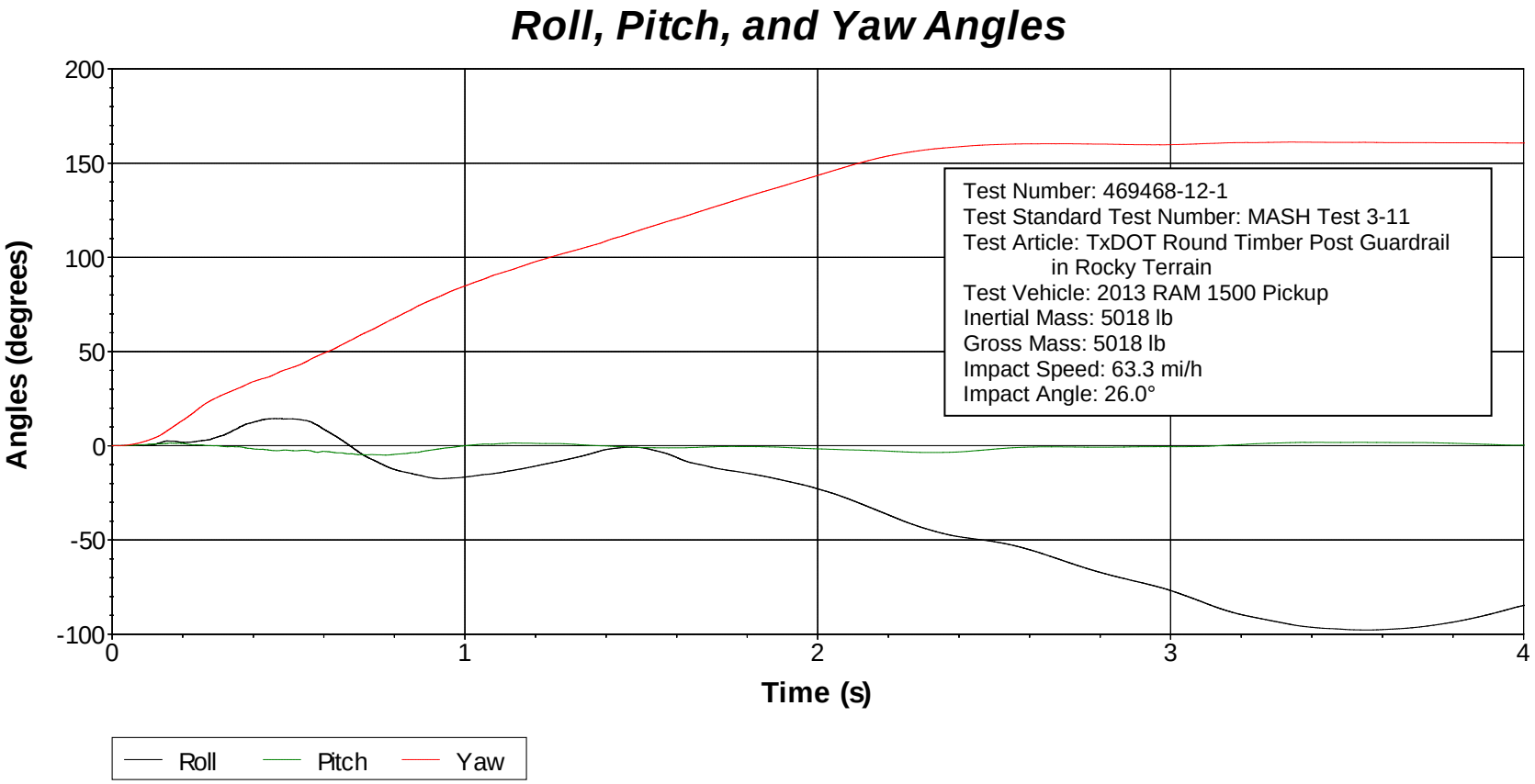

Figure K.3. Vehicle Angular Displacements for Test No. 469468-12-1.

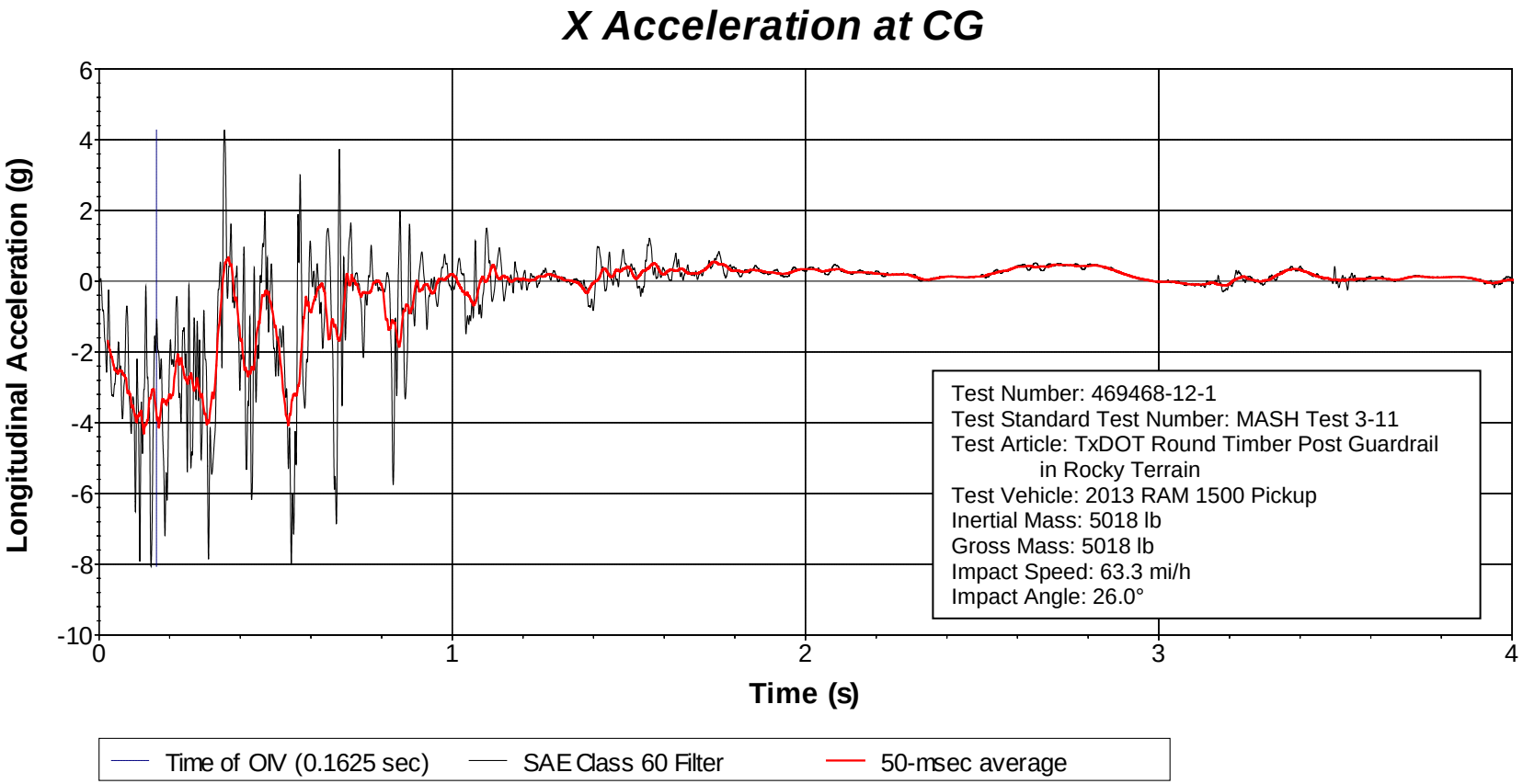

Figure K.4. Vehicle Longitudinal Accelerometer Trace for Test No. 469468-12-1 (Accelerometer Located at Center of Gravity).

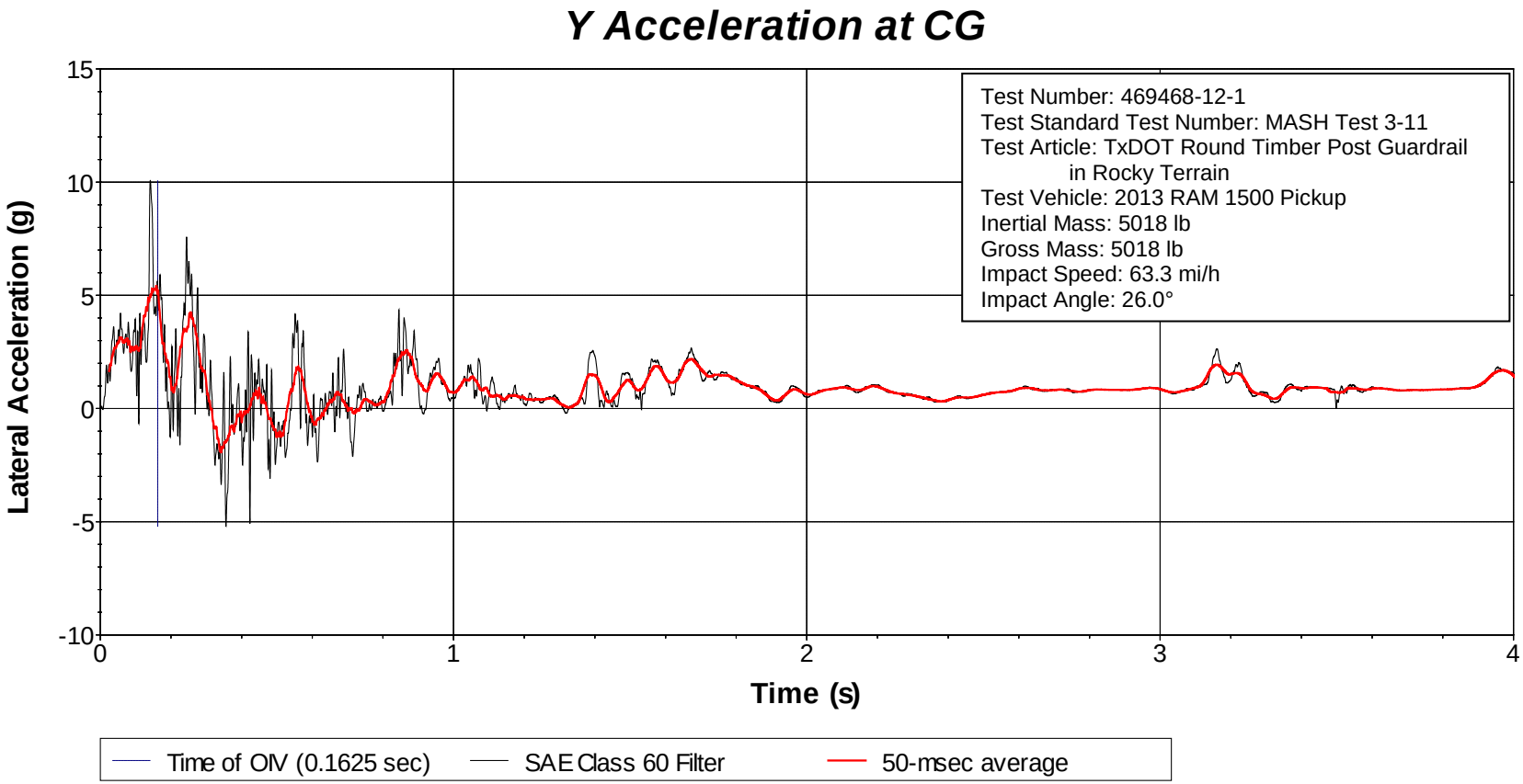

Figure K.5. Vehicle Lateral Accelerometer Trace for Test No. 469468-12-1 (Accelerometer Located at Center of Gravity).

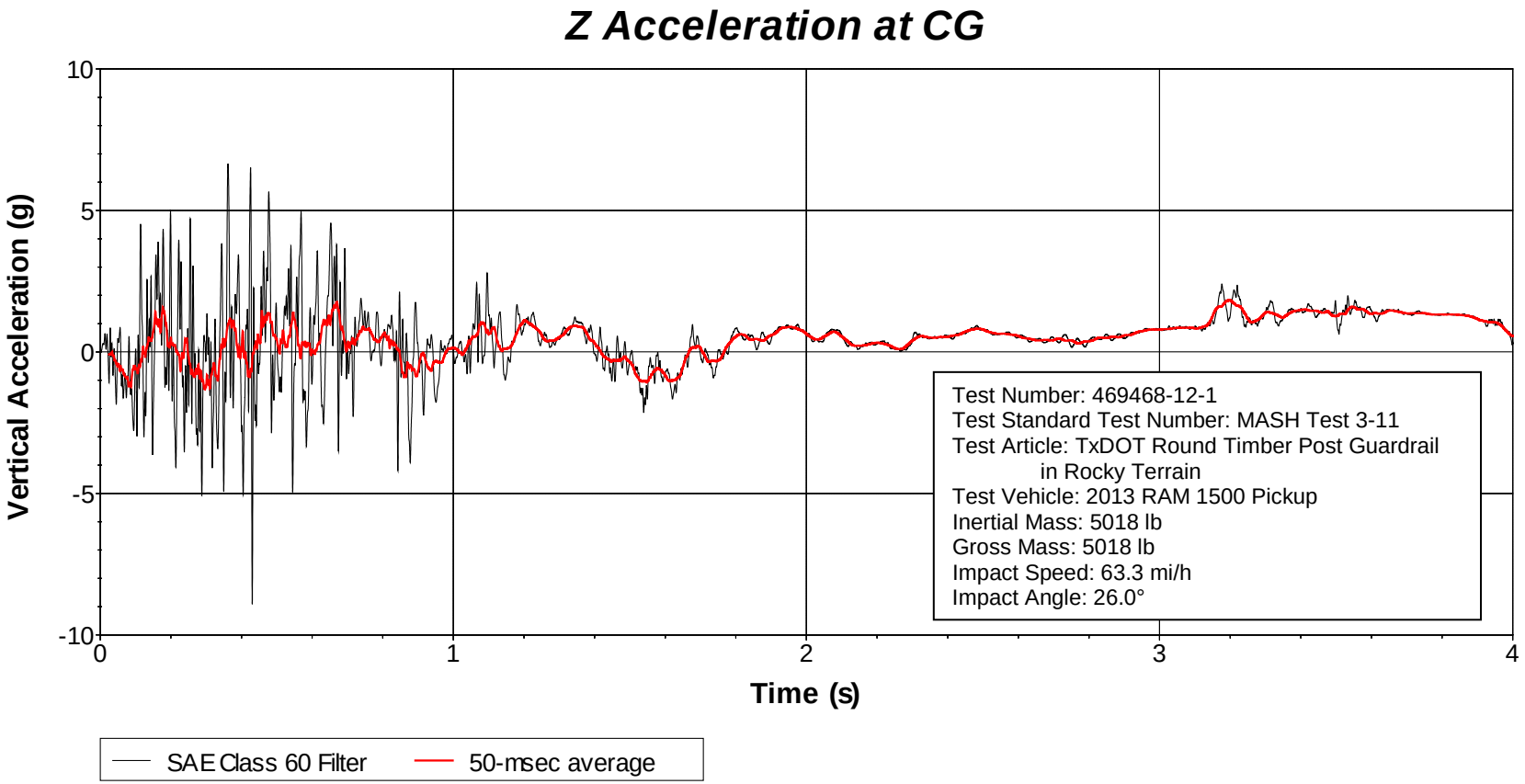

Figure K.6. Vehicle Vertical Accelerometer Trace for Test No. 469468-12-1 (Accelerometer Located at Center of Gravity).

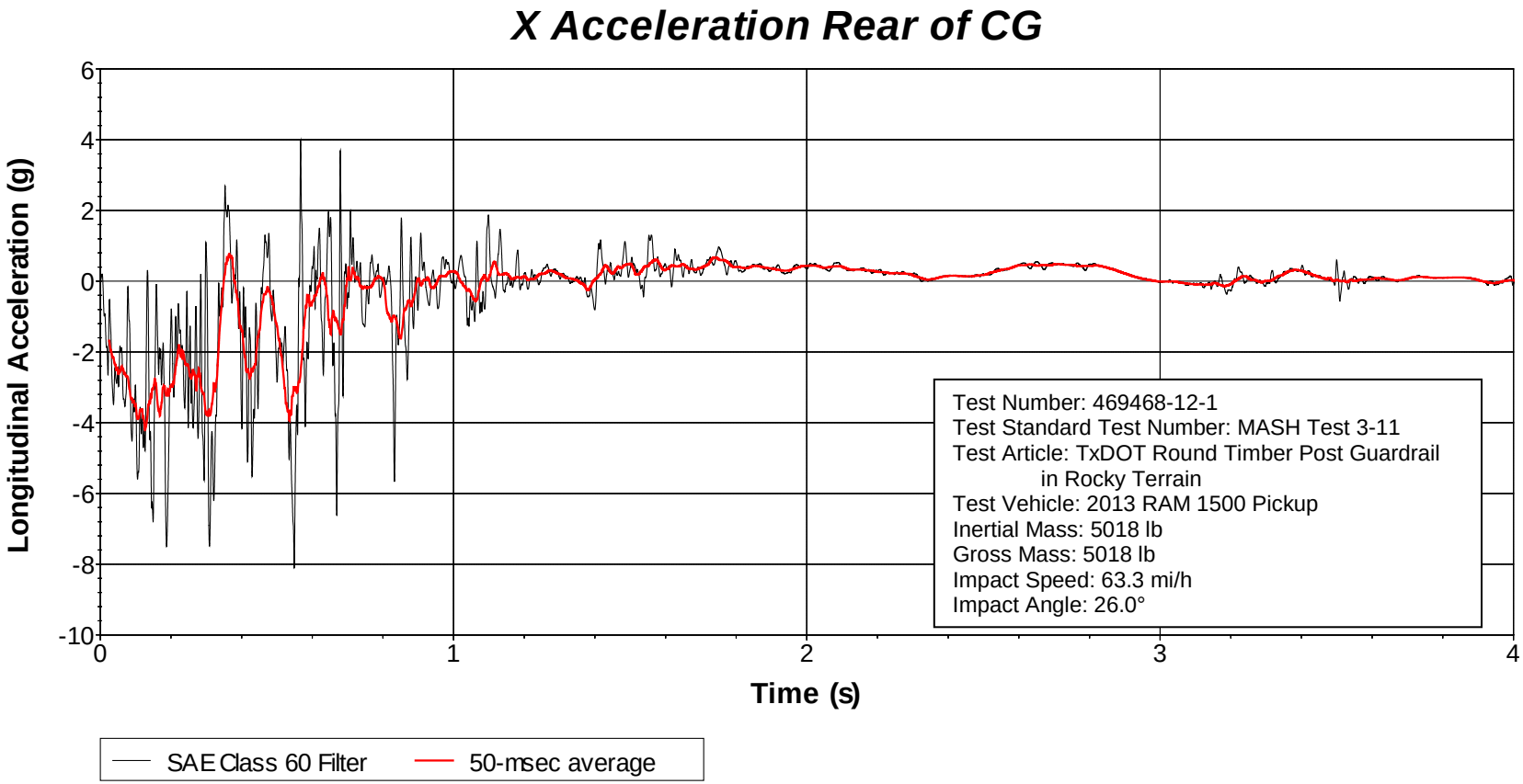

Figure K.7. Vehicle Longitudinal Accelerometer Trace for Test No. 469468-12-1 (Accelerometer Located Rear of Center of Gravity).

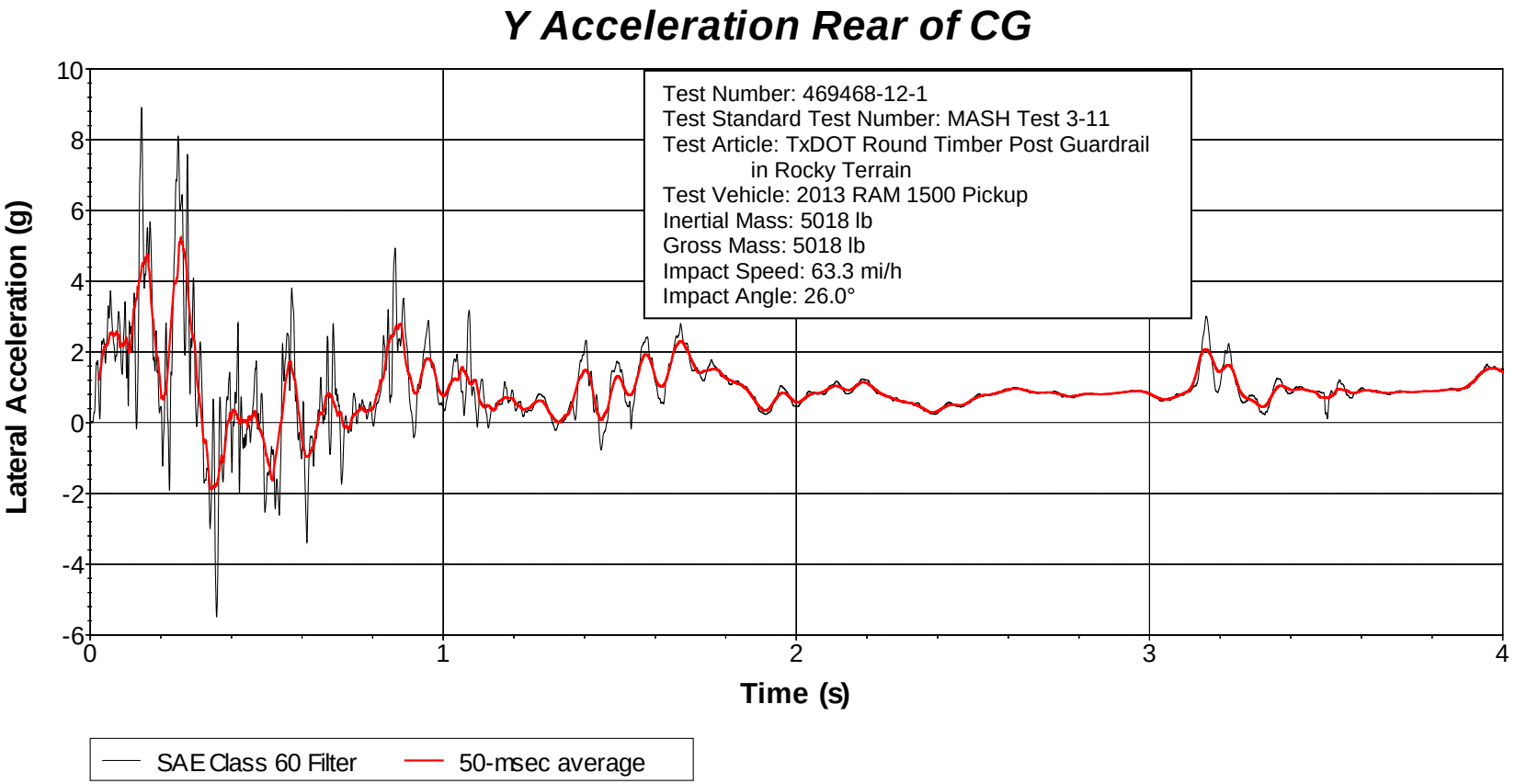

Figure K.8. Vehicle Lateral Accelerometer Trace for Test No. 469468-12-1 (Accelerometer Located Rear of Center of Gravity).

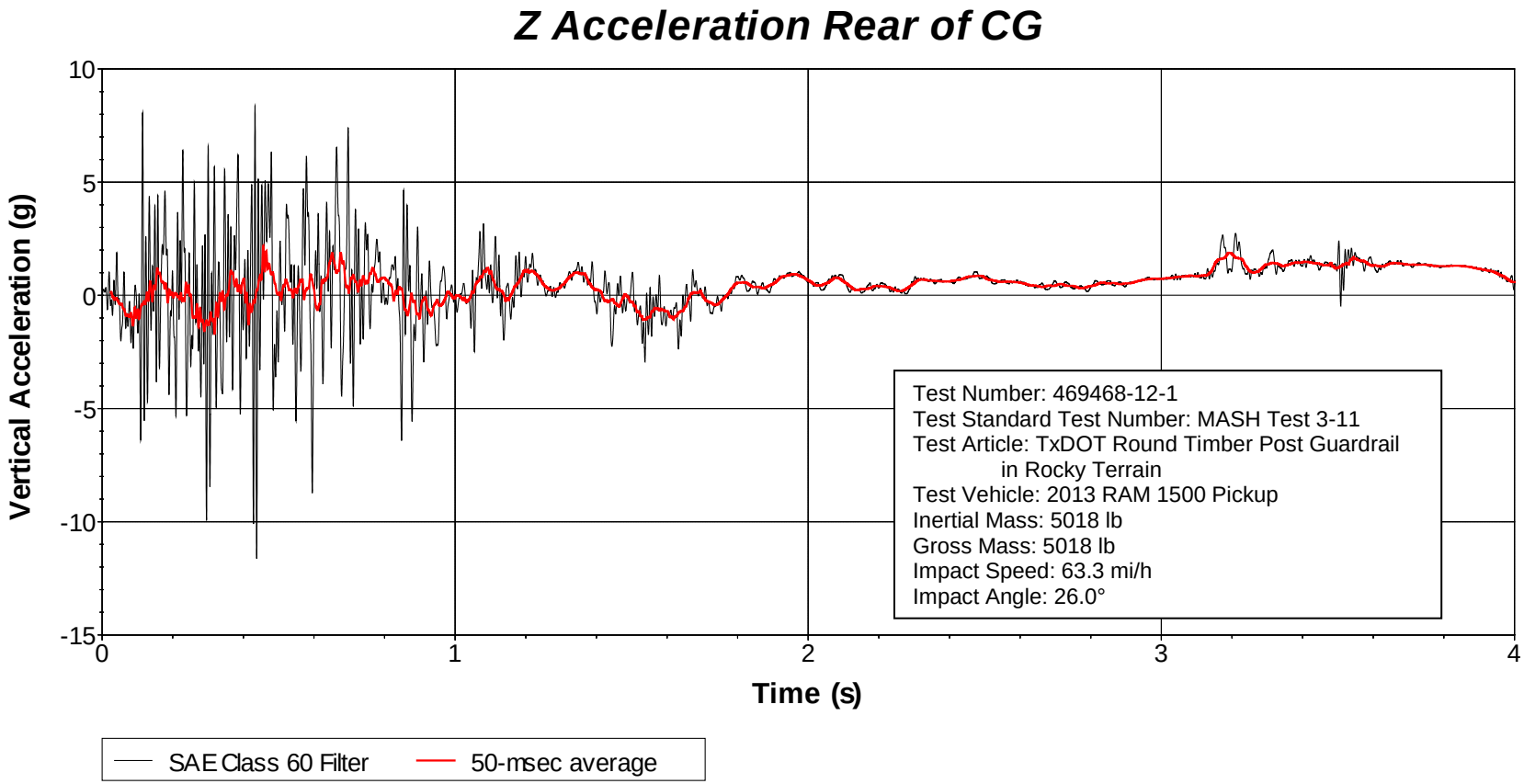

Figure K.9. Vehicle Vertical Accelerometer Trace for Test No. 469468-12-1 (Accelerometer Located Rear of Center of Gravity).