TRIC

History

MARISCAL AND COMPANY

MANAGEMENT CONSULTANTS

June 3, 1977

Mr. Melville J. Ruggles
COTR
Urban Mass Transit Administration, UTD
Room 6116B
2100 Second Street, S.W.
Washington, D.C. 20590

Dear Mr. Ruggles:

Re: Mariscal Contract: SB9-33-8(a)-77-C-682

In accordance with contract provisions, Article I, par. 20, we are pleased to submit our findings and recommendations for Task #1. This report should serve as a guide for the Office of Technology Development and Deployment to use in identifying the capabilities and limitations of the various communication channels that presently exist to disseminate technical information.

It should be pointed out that the budget limitations of the contract have handicapped our ability to conduct an in-depth analysis of each channel of communication and more importantly to survey user feedback and informational needs. The latter area should be the corner stone of a final communication program. However, in spite of limited research, we were able to develop a dissemination model and evaluation criteria from a review of current practices and can provide management with a general indication of strengths and weaknesses and target areas for further investigation.

We have completed preliminary research for Task #2 and will be submitting our findings and recommendations shortly. The schedule delay resulted from a 3 week postponement of the TSC review meeting which was a critical element of our total evaluation.

1055 THOMAS JEFFERSON STREET, N.W., SUITE 505 WASHINGTON, D.C. 20007 • (202) 338 6930
4929 WILSHIRE BOULEVARD, SUITE 1010 LOS ANGELES, CALIFORNIA 90010 • (213) [illegible]

If you have any questions about this report, please contact me. In closing, let me underscore the need to follow up our initial effort with additional time to more fully investigate the capabilities and benefits of each communication channel.

Cordially,

Ed Muendel

H. Edward Muendel
Project Manager

HEM/jc

Task # 1

Background

The Office of Technology Development and Deployment (UTD) has for some time been concerned about its responsibility to pursue an active program of effective communication to users of mass transportation technology. The value of research and development activities ultimately can be measured not only by the degree to which new ideas are implemented but also by the communication process which keeps constituent groups actively informed and involved in the planning activities and matches research projects with the transportation needs of urban communities. Interaction with UMTA's client groups during the first and second Research & Development (R&D) Priorities Conferences gave, however, a clear indication that many individuals directly involved in mass transportation are not aware of UMTA's technology development and deployment activities. Hence there exists a need to evaluate UTD's communication programs and a desire to make improvements.

Objective

The purpose of this first task is to conduct a general review of current communication practices and to evaluate how effective they are in keeping user groups properly informed in an accurate and timely fashion. A primary objective of this evaluation is to identify the major strengths and weaknesses of each method used by UTD to

disseminate information about its activities and the results of its completed projects.

Approach

The study proceeded by a series of three overlapping steps to gain an understanding of past practices and to develop solutions for specific communication problems.

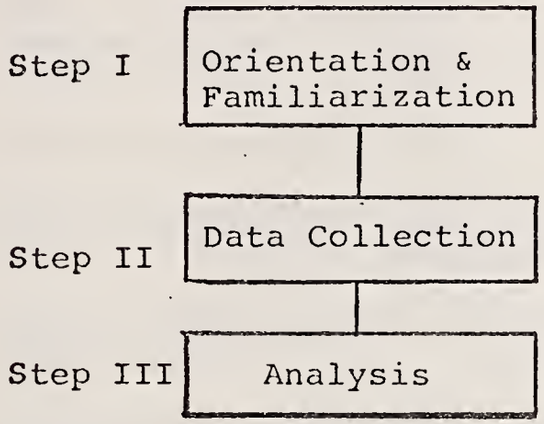

Step 1 focused on a general discussion of background information and a review of departmental objectives and present research activities. Step 2 dealt with a more refined investigation into communication practices and included a study of eight (8) specific documents as follows:

1. Department of Transportation Organization Manual
2. Research Development and Demonstration Project Directory
3. Budget Justification

4-5. Proceedings of the Research and Development Priorities Conferences February, 1976 and November 30-December 1, 1976.

6. Transit Research Information Program Report

7. Draft Communications Plan

8. Department of Transportation Public Affairs Manual

In addition, a number of significant interviews were conducted with individuals from outside the UTD staff:

- UMTA Office of Transportation Management and Demonstrations, Transportation Research Information Center (TRIC)
- DOT Office of R&D Policy, Technology Sharing
- DOT Office of R&D Plans & Resources, Transportation Research Activity Information Services (TRAIS)
- National Academy of Sciences, Transportation Research Board (TRB)
- Transportation Systems Center (TSC), Plans and Program Development
- DOT Office of R&D Plans and Resources, Network of Transportation Research Information Services (TRISNET)

Step 3 involved a preliminary analysis of each communication method used to disseminate technical information. Budget constraints did not permit an in-depth analysis of the effectiveness of each method particularly from the user viewpoint. However, a number of surface problems became apparent to warrant identification for further study. Also, our analysis will continue in preparation for Tasks 4 and 5

which deal with the development of a communication master plan.

Evaluation Criteria

In order to prepare an evaluative summary of the current status of UTD's communication methods, it was necessary to develop performance criteria. These criteria represent a general yardstick for measuring the overall effectiveness of each method and for identifying major strengths and weaknesses.

Performance Criteria for Evaluating the Effectiveness of UTD Communication Methods:

1. Accessibility - do audiences have access to the communication channel?

2. Attention - does the communication method gain user attention and have intuitive appeal?

3. Information Needs - does the communication technique satisfy user interest and needs?

4. Utilization - is the communication method properly utilized to gain maximum benefit from both the users's and UTD's standpoint?

5. Degree of Difficulty - does the present form of communication and technical approach match the user's background experiences and level of understanding?

6. Feedback - is there a mechanism available to evaluate user reaction?

7. Value Added - did the type of communication reflect a substantive value in terms of UTD's dissemination objectives?

This framework for evaluation does not deal with the content of communication but rather the technique or method used to convey technical information about UTD's projects and research activities. At best, the evaluation framework should be viewed as a guide for assessing current practices and for developing improvements.

Dissemination Framework

The table on the following page will graphically illustrate the flow of communication from the Office of Technology Development and Deployment. The output of the department takes the form of transit research information in a variety of written and spoken formats ranging from the final report of a completed project to a presentation given by a member of the project management staff.

The project manager is the approval mechanism for a final report and provides the key link between producers of initial output, typically contractors, to the communication channels or methods which refine it for dissemination to various users and beneficiaries. He is generally responsible for monitoring and approving the output of projects, determining the most probable users of that output, forwarding the report to TRIC (Transportation Research Information Center) after completing a direct mail distribution, and generally suggesting other distribution modes.

Dissemination Framework

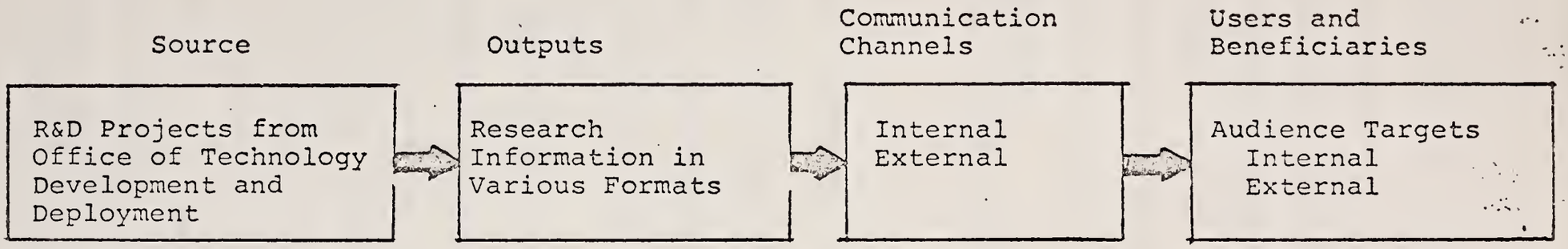

Outputs: Research Information in Various Formats

- Announcements of Reports
- Executive Summaries
- Technical Summaries
- Project Reports
- Audio/Visual Presentations and Papers
- Demonstrations
- Speeches
- State-of-the-Art Summaries

Communication Channels: Internal and External

- NTIS (National Technical Information Service)
- TRIC (Transportation Research Information Center)
- Conferences, Workshops and Seminars
- Direct
- TRISNET & Other Networks
- DOTL (Department of Transportation Library)
- Media thru UPA (UMTA Public Affairs)
- Technology Sharing Exhibits
- Congressional Records/Hearings
- Project Advisory Support
- Foreign and Domestic Briefings
- TRB (Transportation Research Board)
- TRAIS (Transportation Research Activities Information System)
- APTA (American Public Transit Association)

- TSC (Transportation Systems Center)
- Federal Register
- OTA (Office of Technology Assessment)
- MACS (Management Accounting and Control System
- Other

Users and Beneficiaries: Audience Targets - Internal & External

(Categorized to reflect field of specialization and interest)

- U.S. Congress and Various Committee Members
- *State and Local Governments
- *Federal and State Transportation Agencies
- *Planners
- *Consultants and Engineers - Transit Systems
- *Manufacturers and Suppliers - Vehicles and Component Hardware
- *Transit System Operators (operating properties) - Public and Private Sector
- *Civic and Community Groups
- *Universities
- *International Groups
- General Public at Large - Transit Riders and Potential Riders
- *Professional As ciations
- Special Interest Groups
- *Other Government Agencies

*Client Groups

Various communication channels serve as a conduit from the department to user groups and generally cater to specific audiences. Channels can be divided into two groups, internal or external, depending upon constituency. For example, internal channels such as TRAIS (Transportation Research Activities Information System) and MACS (Management Accounting and Control System) deal primarily with inner governmental organizations and serve as an R & D management informational system on budgetary, expenditure and project matters. They are generally not used by non-governmental personnel. External channels can have a wide public distribution such as the news media (newspapers and periodicals) which are served by the UMTA Office of Public Affairs. Other channels have complex interrelationships. For example, TRIC (Transportation Research Information Center) provides abstracts and final reports to NTIS (National Technical Information Services) for sale to the general public. At the same time, TRIC supplies abstract information to HRIS (Highway Research Informational Services) which inturn evaluates the data for input into TRISNET (Transportation Research Information Services), a nationwide technical data base which can be accessed by remote terminal. TRISNET inturn links the nation's transportation information activities into a system of libraries, data bases, and retrieval servies capable of speedy and economic access. This system has the capability of serving a wide spectrum of user groups both in and out of the public sector.

Users and beneficiaries are the end audiences of the communication effort. Typically, they are the decision makers who utilize the benefits of the information provided by the Office of Technology Development and Deployment. They also fall into two categories, internal and external, in relation to their governmental affiliation. Internal users are individuals within the Federal government who need a good working knowledge of the output of the UTD programs. Included in this group are Congress, OMB (Office of Management and Budget), Office of the Secretary of Transportation (OST) Staff and UMTA Staff. External users are groups who participate in or have interest in the urban transportation process. They include riders, planners, operating properties, universities, vehicle manufacturers, state and local governments, and related groups. See user table. Many of these external groups are represented by various associations, institutions, and committees. These groups make up aggregations which represent most all of the potential users. Also included in external groups are actual clients who are responsible for procurement and the final implementation of UTD's technology developments and products like the transbus vehicles.

Evaluation of Communication Methods

Our approach followed a systematic review of each channel of communication to evaluate its effectiveness as a mechanism for technology disseminiation. The review began with the application of seven criteria to assess the degree of past

performance. Although the key ingredient of this analysis, the user, is omitted due to budgetary limitations, the appraisal will serve to identify and highlight general strengths and weaknesses. It will also lay a foundation for developing and organizing a communication master plan.

- NTIS (National Technical Information Services) is a repository set up under the Department of Commerce to collect and sell various government reports and documents of a technical nature to the general public. They supply paper copies or microfiche of all UTD reports submitted by TRIC which acts as its primary contact source from UTD. NTIS provides an abstract summary of all documents for sale and has a computer capability to develop bibliographical data upon request. Its strength as a communication mechanism lies in its sales function to user groups who may wish to purchase UTD reports and who are kept abreast of available reports through its abstract announcements. NTIS short comings lie in five areas: 1) Many user groups are not fully aware of its role and function as a repository and are not familiar with the correct document requisitioning procedure. 2) Copies of documents are available from other sources free-of-charge which discourage use of the system except as a last resort. 3) All documents on transit research are not available at NTIS for a varity of reasons. 4) There can exist a 3-4 month time lag from the issuance of a technical report to its

availability which tends to discourage its use. 5) State-of-the-art knowledge does not necessarily get published which also discourages many users from relying on NTIS as a source of both current and complete information.

- TRIC (Transportation Research Information Center) is an organization set up in UMTA (Office of Transportation Management and Demonstrations) to receive, classify, abstract, store and disseminate information covering all modes of urban mass transit. Task #2 provides a detailed analysis of the TRIC operation and discusses its effectiveness. In short, it serves as conduit between UTD and both TRISNET and NTIS and for this reason provides a valuable communication service to user groups. However, its future role and mission in UMTA is not clear which inturn has created problems of understanding. In its present capacity as a library for UMTA and abstracting information center with bimonthly and yearly publications, TRIC has limited capability to expand services outside UMTA. In addition, many other organizations duplicate TRIC's informational services to user groups. Its future role and mission must therefore be carefully evaluated to eliminate duplication of effort and conflicting practices before it can provide additional technology transfer services to UTD.

- Conferences, Workshops and Seminars have been a successful communication mechanism for UTD. The UMTA Research and

Development Priorities Conferences co-sponsored with APTA (American Public Transit Association), were well received by participants. Other work shops and joint meetings held with TSC and TRB are reported to have also generated favorable reactions. The Offices of Rail Technology and Bus and Paratransit Technology have utilized this communication channel most frequently. In short, conferences and workshops appear to be a preferential method of technology disseminations for UTD and serve effectively as a feedback mechanism for various constituent groups.

- Direct Communications in the form of face-to-face, phone or written methods provide one of the most credible and effective ways to gain user confidence and understanding. As a communication channel it should be encouraged on the appropriate level between project managers and various user group management personnel. A two-way verbal exchange of information satisfies performance criteria and evidence from user groups supports its effectiveness. The key factor is the balancing of the informational needs of client and user groups with the time constraints of the UTD staff. An alternative approach to utilize the benefits of this mechanism is to have a "speakers bureau" or "road show", professionally done, where key UTD staff members would conduct meetings and make presentations. More about this technique will be discussed in Task 4.

• TRISNET and other networks provide a unique and potential resource to UTD for reaching a number of user groups through a National "on-line" system called TRIS-ON-LINE. It consists of interlocking libraries (repositories) for document copies, a computer search capability for research information, including work in process, and remote terminals for data access. The concept is sound; however, there are a number of difficulties which prevent full system utilization and user confidence: 1) There is an overlap of functions among TRB's (Transportation Research Board) HRIS (Highway Research Information Services), TRIS-ON-LINE, and TRIC, to a lesser extent, in terms of providing the same data to subscribers upon request. 2) There is a general lack of awareness of the system. 3) The data base contains a large percentage of historical materials (3+ years old) which have diminishing utility. 4) Not all UTD data is entered into the system and is filtered both by UMTA and HRIS separately. 5) The lag time before a report gets into the system can be up to 8 months. 6) Approximately 40% of all transit research material never gets into the system for a variety of reasons. As a result, the user population has fallen off and the system is not operating effectively although the potential is there. Until major policy decisions are made by DOT regarding how to deploy the system in user communities, avoid duplication of effort and solve these other problem, TRISNET will play only a minor role in achieving the communication goals of UTD, except

for academic and related research groups.

- DOTL (Department of Transportation Library) is a comprehensive research library open to the public for transportation research materials. It provides an internal government research function by supplying documents on a reference basis primarily. The library publishes bibliographies and monthly update reports on "Transportation" and "Urban Transportation Research and Publications" and disseminates these publications to state transportation libraries and universities throughout the country. As a dissemination tool for UTD materials, its role is passive and is not a significant link except for some government researchers and academic communities.

- The media through UPA (UMTA Public Affairs) is supplied with material from UTD primarily for trade journals and the press. Limited research indicates that this medium is underutilized and that many articles in trade journals are primarily initiated by the project managers. A TV taping session between George Pastor and OST Public Affairs for possible viewing this summer is an indication that a more aggressive role is being taken for obtaining media coverage which is an effective way to reach the general public.

- Technology Sharing Exhibits are reported to be used by UTD as a mechanism for dissemination. TSC indicated that this method can be highly effective in promoting hardware R & D programs such as the Transbus Program. An additional investigation will be required in this area to develop a more comprehensive assessment.

- Congressional Record and Hearings serve to provide information for the press and Congressmen. Because volumes are large and are poorly indexed, they are of little value to other user groups. To the extent that representatives from UTD who testify before Congress can articulate UTD information, this medium can be fully utilized when the opportunity presents itself.

- Project Advisory Support takes the form of technical contracts and exchange meetings with various support groups in the performance of project work. For example, the Office of Bus and Paratransit Technology sucessfully used this technique to conduct a series of meetings with bus manufacturers and with APTA representatives in developing a specification for an advanced design bus. As a mechanism for obtaining outside technical support and soliciting user group participation in decision-making, this communication channel is beneficial.

- Foreign and Domestic Briefings refer to discussions held by UTD management to advance an awareness of UMTA's R & D activities and to exchange ideas and project knowledge. The real benefit lies in exchange of information regarding technologies and solutions to operating problems. For example, briefings were conducted on UMTA rail technology for the Ministry of Railways - India and the Ministries of Transportation and R & D in Germany. Both sessions were reported to be well received. It appears that a greater degree of foreign exchange of information would be beneficial and that this medium is underutilized at present.

- TRB (Transportation Research Board) belongs to the National Academy of Science and acts as a forum for scientific exchange of transportation information. It operates through various committees, such as the light rail committee, and HRIS (Highway Research Information Services) to support UTD. They reportedly do a good job in the dissemination of information, collection of feedback and in performing data research, abstracting and indexing services through HRIS which provides UTD's access to TRIS-ON-LINE. Their primary audience targets are State and local governments and research communities. They do a credible job in setting up national conference panels and meetings and in providing state-of-the-art overviews and opinions on current transit technology. In this regard, their potential as a communication technique for

UTD is high. However, in regard to HRIS, their activities appear to overlap those of TRIC and TRISNET and can cause some user confusion.

- TRAIS (Transportation Research Activities Information System) is a computerized R & D management information system which tracks data on programs, projects, tasks, work agreements, expenditures and outputs. It is primarily an internal DOT system with the major purpose to provide the Office of R & D Plans and Resources with access to data needed for planning, controlling and monitoring DOT's R & D programs. Information, is available in computer print-outs and includes work-in-process as well as completed project information and is used to answer questions from Congress, DOT and other agencies. It is this system that supplies work-in-progress information to TSC which inturn inputs it to TRISNET. To the extent that project managers accurately and completely input the data to TRAIS, this communication mechanism should be beneficial for congressional review.

- APTA (American Public Transit Association) the key rail and bus cities represents and transits operating properties on a national level. Their involvement in communication for and with UTD has been noteworthy from the R & D priorities conferences to technology sharing meetings and workshops to the publications of the Transit Journal and Passenger Transport. This medium

of communication has enabled UTD to achieve many principal objectives of technology dissemination. However, APTA membership does not constitute all operating properties of the country and includes less than 25% of all bus cities. In addition, state and local governments who provide the funding for transit projects are not fully represented. As a result, a closer examination of APTA's communication role would be beneficial for future communication planning.

- TSC (Transportation System Center) is a governmental agency that provides communication support to UTD in a variety of ways discussed in Task 2. At the present time, there are no Project Plan Agreements specifically for communication activities and their future role is under examination.

- Federal Register is a medium open to all governmental agencies for use in publicizing regulations, changes in organization and announcements of public meetings. This channel of communication has not been used in the past and offers a new potential for further investigation regarding circulation and dissemination procedures.

- OTA (Office of Technology Assessment) was set up to advise Congress on technology related matters of interest to the membership. It solicits information and is therefore out of UTD's control in terms of communication.

- MACS (Management Accounting and Control System) is an UMTA management information system (similar to TRAIS) for in-house dissemination of project control and expenditure data. It is currently under study by another consulting firm and its active use by UTD for other than UMTA purposes is questionable and will have to be evaluated further.

- Other communication channels include these which fall outside the above eighteen methods. The most significant items used for technology transfer have been independent publications covering UTD projects. Two examples include the study of the taxi cabs published by the Museum of Modern Art and the landscape brochure on transit planning and beautification published by the Horticulture Society of America. Both are excellent examples of "layman treatment" of complex fields and serve to illustrate an effective technique of reaching special interest groups and the general public.

UNITED STATES GOVERNMENT

Memorandum

DEPARTMENT OF TRANSPORTATION
URBAN MASS TRANSPORTATION ADMINISTRATION

1109.1

DATE: August 23, 1971

In reply refer to: UPA-1

SUBJECT: Technical Studies Project Reports

FROM: Assistant Administrator for Public Affairs

TO: Assistant Administrator for Program Operations

As you may know, we are currently setting up a comprehensive index of all reports generated by UMTA grants. Once this is completed, we expect to have all reports indexed and shelved in a library fashion, with detailed abstracts for each document filed by key words in a special cross-reference index.

At this time, however, our inventory of reports on hand is missing several titles, and there are a number of technical studies projects for which we have no reports at all. Attached is a list of reports we have identified as missing from our inventory and a listing of projects marked "completed as of December 31, 1970," for which we are missing all reports.

Any assistance you can provide in locating these documents will be greatly appreciated. Please contact David Lee in room 9307E (telephone extension 60081) with any pertinent information.

C. Carroll Carter

TECHNICAL STUDIES PROJECT REPORTS KNOWN TO BE MISSING

INT-T9-2: Title: "Bus Feeder Study for the Lindenwold Rapid Transit and the Camden, N.J., Metropolitan Region -- Final Report"
Author: Praeger-Kavanagh
Date : September, 1968
[PB-191-183]

CAL-T9-8: Title: "Transit Survey"
Author: San Diego County Comprehensive Planning Organization
Date : March, 1970
[PB-192-190]

Title: "Transit Development Plan and Program"
Author: San Diego County Comprehensive Planning Organization
Date : June, 1970
[PB-192-715]

FLA-T9-1: Title: "Terminal Facilities Master Plan"
Author: Metropolitan Dade County Planning Department, Miami, Florida
Date : December, 1968
[PB-184-729]

Title: "Proposed Transportation Master Plan for Dade County -- Two Million Population (1985 Estimate)"
Author: Metropolitan Dade County Planning Department, Miami, Florida
Date : February, 1969
[PB-184-764]

Title: "Modal Split Models -- Interim Report #3"
Author: Simpson and Curtin (for Metro. Dade County, Florida)
Date : NOT AVAILABLE
[no PB number]

MICH-T9-5: Title: "A Design of a Unified Regional Mass Transportation System -- Final Report"
Author: Flint Transportation Authority
Date : NOT AVAILABLE
[PB number not available]

MISSING TECHNICAL STUDY REPORTS (cont.)

FLA-T9-2: Title: "Transit in South Broward County: Technical Study"
Author: Hollywood City Commission, Florida
Date : March, 1969
[PB-191-137]

FLA-T9-4: Title: "Mass Transit in the Tampa Bay Region -- Summary Report"
Author: Tampa Bay Regional Planning Council, St. Petersburg, Florida
Date : 1970
[PB-192-404]

Title: "Tampa Bay Mass Transit: Planning for Tomorrow -- Summary Report #3D of 1969 Work Program"
Author: Tampa Bay Regional Planning Council, St. Petersburg, Florida
Date: April, 1970
[PB-192-405]

Title: "Mass Transit Concepts of the Tampa Bay Region"
Author: Tampa Bay Regional Planning Council, St. Petersburg, Florida
Date : April, 1970
[PB-192-409]

INT-T9-11: Title: "St. Louis Metropolitan Area Rapid Transit Feasibility Study -- Phase II Report: Alternative Transit Systems"
Author: East-West Gateway Coordinating Council, St. Louis
Date : 1969
[PB-187-997]

MASS-T9-2: Title: "A Mass Transportation Technical Study (final report)"
Author: Lawrence City Planning Department, Massachusetts
Date : June, 1969
[PB-185-962]

NY-T9-3 Title: "Job Accessibility: A Study of Factors Inhibiting Employment; Syracuse, New York"
Author: Syracuse-Onondaga County Planning Agency, New York
Date : September, 1969
[PB-193-007]

MISSING TECHNICAL STUDY PROJECT REPORTS (cont.)

MD-T9-1: Title: "A Report on Mode Choice Analysis for the Baltimore Region"
Author: Alan M. Voorhees and Associates (for Baltimore Regional Planning Council)
Date : 1969
[PB-191-366]

TECHNICAL STUDY PROJECTS MARKED "COMPLETED"*
MISSING ALL DOCUMENTS

* as of December 31, 1970

CAL-T9-1	Southern California Rapid Transit District
CAL-T9-6	San Jose
GA-T9-1	Metropolitan Atlanta Rapid Transit Authority
MD-T9-2	Baltimore
MASS-T9-6	Northern Middlesex Area Commission
NJ-T9-2	Mercer County
NJ-T9-3	Atlantic County
OHIO-T9-1	Akron
OHIO-T9-2	Toledo
ORE-T9-2	Portland
PA-T9-2	Erie Metropolitan Transit Authority
SDAK-T9-1	Souix Falls
WASH-T9-2	Spokane
INT-T9-3	Kansas City

1169.1

DRAFT OF LETTER TO CONTRACTORS FROM WHOM WE ARE MISSING REPORTS:

Dear Sir:

The Office of Public Affairs, Urban Mass Transportation Administration is presently engaged in a project to catalogue and index all reports generated by UMTA grant programs. Included also will be some material generated by urban transportation projects sponsored through the U.S. Department of Housing and Urban Development prior to 1968. One aspect of our project will be to file detailed abstracts of each report in a comprehensive key-word, cross-reference index.

Our inventory of documents on hand, however, is incomplete at this time. The following report(s), prepared by your organization in connection with urban mass transportation projects, is(are) among those missing from our inventory and may not be included in our index. If possible, we would appreciate your sending a copy as soon as possible to my attention at the above address.

NOTE: These letters would not be sent out until I hear some response to the attached memoranda.

DL

Eclectic
app to pub
publishing

SUBJECT: Research on the Utilization of Knowledge

AUTHOR: Ronald G. Havelock, Ph.D., Program Director

ADDRESS: Institute for Social Research, University of Michigan, 426 Thompson, Ann Arbor, Michigan 48106

TIME: 2:00 p.m., February 27, 1974

PLACE: Sheraton-Palace Hotel, Gold Ballroom

PROGRAM: AAAS-ASIS Symposium, Reorganizing Information Resources To Improve Decision-Making

To schools

Let me begin with a rather distressing finding that turned up recently in one of our projects. Two of my colleagues have for the last three years been engaged in an intensive investigation of R&D management and research utilization in a large federal agency (Lingwood and Morris, 1973). This agency has jurisdiction over an important part of our natural environment. All the top staff in the various labs of that system who were interviewed stress that the prime mission of the agency is application, applying science to improving our methods of coping with soil conservation, pest control, and so forth. Yet my friends find that the greatest actual rewards in this system tend to go to those with an orientation to basic knowledge building, not to applications. In other words the concern expressed at the top is essentially lip service to utilization. The real rewards are all in the other direction. This is not an isolated story. The fact is that the scientific community doesn't care very much about utilization, or if they do, they have a funny way of expressing their concern. Therefore, I am very pleased that the organizer of this symposium has seen fit to include one segment addressed to research on knowledge utilization. This topic has been my preoccupation most of my professional life and exclusively for the last eight years, but I think it is also a topic which is very important, if not central to the wisdom of WISE. The thrust of my argument will be simple, to wit:

First, we do not know how adequate our existing processes for knowledge utilization are.

Second, we can find out by systematic study of these processes.

Third, we have done very little of this to date but what we have done may form a basis and certainly suggests that such systematic study is possible.

and Fourth, we can use well-designed research on utilization as a vital input to the evolution and self-steerage of WISE, itself.

Let me begin with a few very rudimentary distinctions. I think our discourse here concerns three somewhat distinct processes which I will call "generation," "dissemination," and "utilization." Each of these words decribes a different aspect of the total enterprise of science, and together they suggest a sequence of activities which may in some cases lead to the solution of the important problems which have confronted mankind through the ages.

First, the "generation" of scientific knowledge deserves the least comment in this context. I am referring to how the methods of science are intermingled with the genius of individual scientists to produce new facts, theories, or methods, adding in some incremental fashion to what we collectively know about ourselves and our universe.

"Dissemination," in contrast, refers not to how things are created but to how they are moved from one place to another, from one person to another, or from one group to another. "Dissemination" presupposes that knowledge already exists and that its essential elements can be transmitted from point A to point B without distortion or transformation.

Finally "utilization" refers to what happens when knowledge arrives at its destination. It speaks to the question of how knowledge is received, transformed, and consumed once it has arrived at point B.

In considering WISE* we are, no doubt, concerned with all three processes but I think we are most centrally concerned with the second, "dissemination"; at least this must be true if we subsume within WISE the notions of collection, storage, and retrieval; however, I will submit to you that we cannot design properly or rationally for WISE without also considering the third process, "utilization." In short, we must know how and why people acquire knowledge and why they make the effort to attend to the knowledge they acquire.

*World Information Synthesis and Encyclopedia.

As I describe for you what I think knowledge utilization is all about and how we can study it, I hope you will be keeping one question in front of you. This is the question: *how important is the maximum use of existing scientific knowledge?* In asking yourself this question, you will also need to consider two subsidiary questions. First, what do we mean by "maximum use?" and, second, "use by whom?" To my way of thinking "maximum use" consists of what I will call "full entry into the problem-solving space of all potentially relevant users," but more on this later. Regarding "use by whom," I suspect that at most meetings such as this one, the primary concern is the communication of knowledge from scientist to scientist, and indeed, this is the least complicated way to look at the problem. Most studies seem to suggest that research utilization is least problematic between one researcher and another working in the same specialty, and the narrower the specialty the better: the language is the same; the problems are the same or closely parallel; the methods by which the knowledge has been generated are thoroughly understood by the receiver. Hence, there is no need for elaborate transformations or interpretations; there is no need for special agents to act as intermediaries; there is no need for any complicated delivery schemes or strategies. But obviously not all users belong to such a charmed circle. Indeed as we move from hard science to soft (social) science, as we move from basic science to applied science, as we move from narrower specialty to broad disciplines to interdisciplines, and as we move from research to practice the problems of communication escalate. Surely, we are concerned about effective communication across these more difficult interfaces. Indeed, it is my argument that if we can understand how knowledge is transferred from research to practice, we will have unlocked one of the doors to human progress.

This brings me back to the first question, how important is this process of knowledge transfer? Obviously, I think it is very important but I ask the question because our society has acted and is continuing to act as if it is not important at all. For every dollar we spend on generating scientific knowledge, we may spend one penny on dissemination and utilization combined, and for every dollar we spend studying science, we spend less than a penny studying how scientific knowledge is disseminated and utilized. To those of us who think the transfer process is so vital, this is a very confusing and frustrating situation.

There is a sensible argument on the other side of this question. I think the argument runs somewhat as follows. First of all, it can be said that there is a system of communication within science and between science and practice. This existing system has been with us since the beginning and has been evolving in what some might call a "natural" way as science has grown; communication, has after all, been at the heart of science from the early letter writing exchanges that eventually became the Royal Society. Today, the visible core of this system is the journal, but the real system is far more elaborate than that; as Crane has noted, each specialty tends to form its own invisible college within which formal and informal exchange goes on by mail, phone, and meeting; each invisible college also has a distinct social hierarchy which preserves the status quo but also fosters very high speed and accurate interchange among all members.

Thus, there are some data which suggest that what we have is a "system" OK within certain limits. It is not so OK where we have longer distances between the world of the generator and the world of the user, e.g., between basic and applied, between research and practice, between discipline A and discipline B. Even here, however, it could be argued that the social and technical barriers to communication are not only natural but

beneficial, that they serve as a filtering process. New ideas generated by scientists begin in a very tentative fashion as hypotheses. Then they are tested and replicated over and over again before any sense of certainty is attributed to them. Therefore, the argument goes, new ideas should not be speeded across the social barriers of scientific communities until this verification process is near complete. Least of all should such ideas reach practical applications affecting people's lives until such validations are established.

I am inclined to reject this notion of the "natural filter" for one primary reason: we simply don't know enough about the filters, how they work, whether they work protectively and beneficially, and so forth. Our knowledge is lacking because we have not studied them nearly enough. Thus, it is equally arguable that we should strive for improvements, altering this system, breaking down some barriers, bolstering others. This is what I think a science of knowledge utilization should be working on.

My premise is that science, as a process, including generation, dissemination, and utilization, provides the most satisfactory method for solving human problems. This is an optimistic statement, I realize, and one which has been pooh-poohed in many quarters in the last five years, but I still affirm it; and if it is true, it should be possible to state with a great deal of precision just how it is that the science in various fields of knowledge is utilized in the solution of various human problems. Unfortunately, this is not possible. We have very little reliable knowledge about research utilization, and this for a very simple reason: we have done very little research on it.

My work in this area began just ten years ago. As far as I have been able to tell from reviewing literature and discussions with various people, there were then perhaps three or four people in the entire world who were committed to the study of research utilization as a full time endeavor. Today there are perhaps twenty of us, and there is some research on research utiliza-

tion beginning to accumulate but it is a very modest amount. Thus, it behooves us to recognize the miniscule investment which has been made in the systematic study of research utilization as a social-technical process in contrast to the size and dimensions of the problem and its overwhelming social importance.

In spite of these limitations, a little progress has been made in at least two directions which are very important, one *conceptual and theoretical*, the other *empirical*. Let me start with the conceptual side. Simply to recognize that research utilization is a process which can be studied is progress, but we have gone beyond this to define the parameters in some detail, to show the connections to related concepts in psychology, sociology and communication science. Conceptual frameworks are very important and useful not only to generate hypotheses and to guide research efforts but also to give practitioners and policy makers some clarity and some tentative guidance.

A. THE EMERGENCE OF THEORIES OF KNOWLEDGE UTILIZATION

Figure 1 depicts the essentials of the paradigm we have come to use to describe the elements in a research utilization process. It builds on two ideas: first that user communities and research communities are separate problem-solving systems and, second, that two-way communication between them is the essential prelude to the event we call "research utilization."

FIGURE 1 The Problem-Solving Dialogue

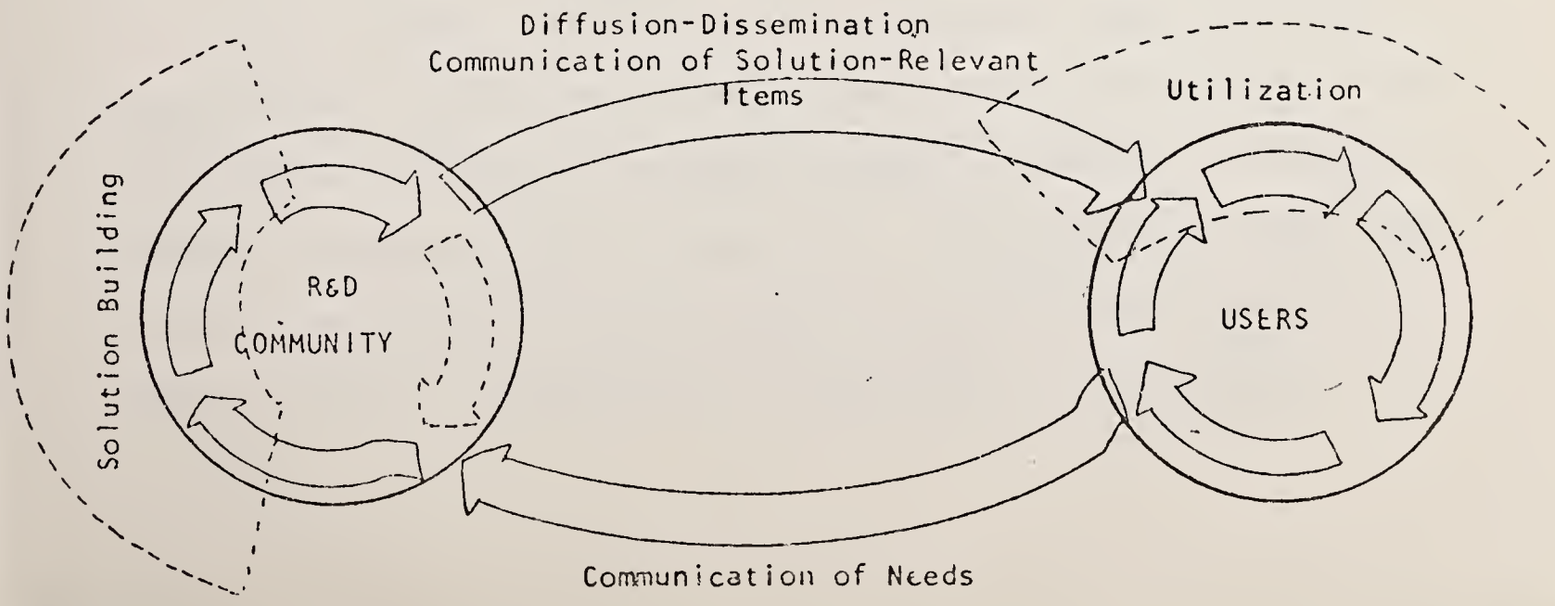

The figure suggests an underlying proposition that societal problem-solving comes about through the formation of relationships between user systems and resource systems. These user-resource linkages contain four essential sub-processes, namely (1) the articulation and transmission of user needs, (2) the generation and development of new knowledge, skills, and products, (3) the transfer of new knowledge, skills, or products from resource systems to user systems ("diffusion"), and (4) the utilization of new inputs by user systems in local innovating and problem-solving efforts. The arrow at the bottom of the figure, labelled "communication of needs," is meant to indicate that the research and development that is done must be relevant and responsive to the real needs of our society. The "diffusion" arrow at the top of the figure indicates that the useful results of R&D must be effectively communicated to users, and the utilization semi-circle is standard to suggest that communication is not enough: the user needs help on implementation and integration of useful research knowledge within his system.

This problem-solving dialogue occurs at many levels in the social structure and applies generally to interorganizational as well as to interpersonal relations, regardless of the specific content or knowledge being utilized, and regardless of the size and internal complexity of the systems to which we are referring.

Figure 2 shows a number of persons in different roles in different organizations. We can imagine that persons more to the left of the figure see themselves primarily as knowledge producers, researchers, developers, scholars, and specialists of various sorts. The people more to the right are more concerned with using knowledge in practical ways to benefit themselves or others, to teach better, to learn better, to live better. In a

FIGURE 2 Micro Linkage

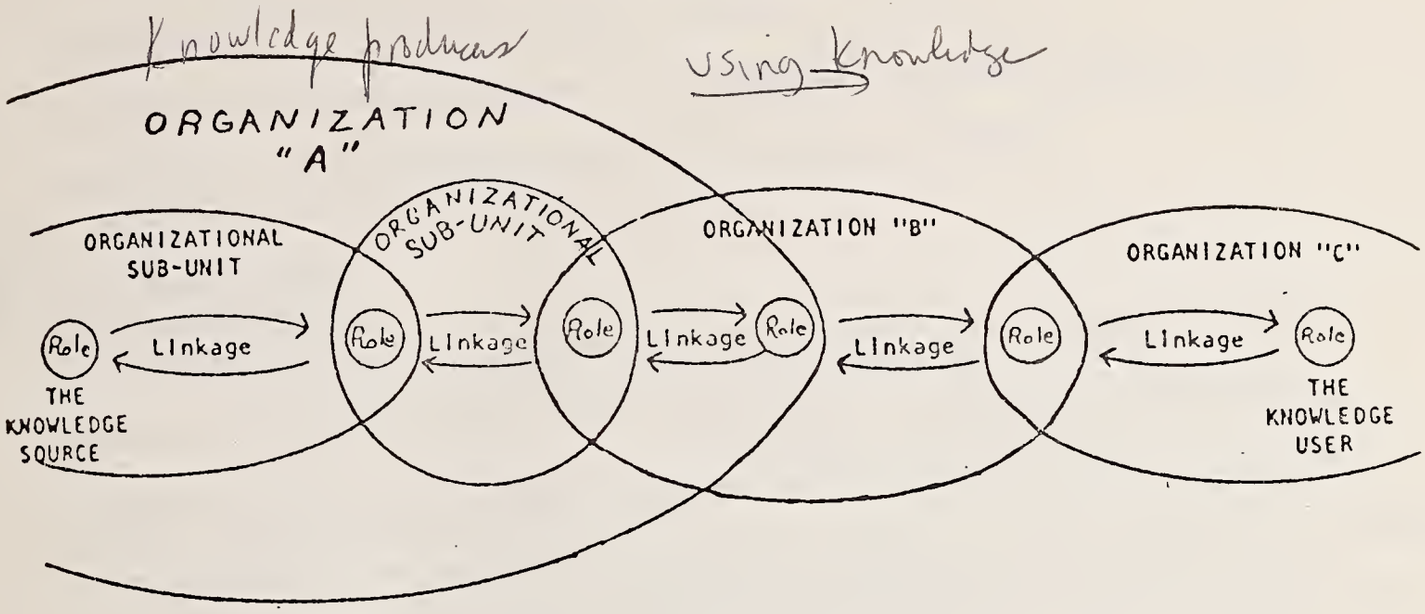

society as complex as ours there is a tremendous spectrum of resource and user roles which ultimately have to be connected to bring about knowledge transfer from research to use. But this knowledge flow chain is made up of many individual links between persons, groups, or organizations; each pair needs to enter into a kind of problem-solving dialogue before successful knowledge transfer can take place.

The model outlined in Figure 1 has been elaborated and used rather successfully to describe the workings of a number of complex D&U systems (Havelock and Lingwood, 1973; Lingwood and Morris, 1973). It can also serve as a set of reference points in discussing much of the past literature relevant to research utilization.

I do not pretend, of course, that everybody will be happy with this one picture of a very complex process. In fact, there appear to be some distinctly divergent schools of thought regarding this subject. Because I think we are all blind men examining different parts of the same elephant, I am going to refer to these schools of thought as "perspectives." My analysis derives from a rather exhaustive search of the semi-relevant literature undertaken

in 1967 and 1968 (Havelock, et al., 1969). After quite a bit of mental struggle with all this material, there seemed to emerge three distinct viewpoints. In very brief outline, they were as follows:

1 *RD&D Perspective*

One perspective was clearly sender-oriented and message-centered; it stressed how sound, reliable, useful knowledge is created, transformed, packaged for export, and sent out. We called this the "RD&D" perspective. It represented a very orderly, systematic, logical systems approach to change which has been popular in Washington since Mr. McNamara came to town, if not before.

2 *Problem Solver Perspective*

A second perspective was very much user-centered, very nearly excluding consideration of outside expertise as a force in bringing about change. It took its lead from the non-directive psychotherapy model of Carl Rogers and the human relations trainers. It was a psychological and humanistic view which put highest value on the self-perceived needs and circumstances of client systems. The primary legitimate intervention by outsiders would be to provide assistance on the process of change, particularly on ways to develop group solidarity around goals and needs. Hence, we called this school the "problem solvers."

3 *The Social Interaction Perspective*

A third view was much more empirical and non-committal, represented most strongly by sociologists conducting research on the communication and diffusion of innovations. These investigators took the position of observers of a passing scene rather than advocates. They were scientists measuring the flow of knowledge as a social phenomenon, counting the number of adopters

at time-one, time-two and so forth. We choose to call this school the "social interaction" perspective for two reasons: first, their primary focus was on the communication and transfer between people and between organizations, rather than on what went on inside them; and second, their major empirical findings tend to show the overwhelming importance of interpersonal social interaction, particularly at an informal level, in bringing about successful transfer.

A similar typology of perspectives has also been derived by Archibald (1968) from a thorough review of literature on policy analysis and applied social science, supported by 34 interviews and a number of observations related to research utilization in the area of arms control, disarmament, and defense policies. Her corresponding categories are "academic orientation" (roughly comparable to what we called the "social interaction perspective"), "clinical orientation" (very close to what we call the "problem solver perspective") and the "strategic orientation" similar in some respects to what we called "RD&D." In her brilliant exposition, Archibald shows how each orientation colors the change strategies of its advocates and leads to many of the problems, gaps, and conflicts that make research utilization a difficult social process, even in areas of vital national and world priority.

We have found the same kinds of ideological divisions emerging in other studies, and we have used factor analysis to derive the attitudinal dimensions more empirically and using samples of practitioners, researchers, and government program administrators as respondents. (Havelock and Havelock, 1973; Havelock and Lingwood, 1973.) Very clear user-centered (or problem-solver) and R&D-centered attitude clusters emerge from these analyses, with much less clear clusters related to the academic-social interactionist view.

LINKAGE AS A UNIFYING CONCEPT

Our longer-run objective in pursuing these studies of competing ideology is to find ways in which they can be synthesized; it is my personal view that a truly satisfactory theory and process of research utilization emerges only out of a fusion of perspectives. It was this belief that prompted us to derive the "linkage" model with which we began this discussion. It is essential to think of the R&D community and the related practitioner community in any social or technical problem area not as separate systems but as interdependent subsystems within a larger problem-solving process, as suggested in Figure 3.

The concept of linkage starts with a focus on the user as a problem-solver. We must first consider the internal problem-solving cycle within the user. The user experiences an initial "felt need" which leads him to make a "diagnosis" and a "problem statement." He then works through "search" and "retrieval" phases to a "solution," and finally to the "application" of that solution. But the user must also be meaningfully related to outside resources.

nus on user

[Insert Figure 3 here]

The user ~~must make contact~~ with the outside resource system and interact with it so that he will get back something relevant to help him with the solution process. The user must enter into a reciprocal relationship with the resource system that corresponds to what is happening in the user. In effect, resource systems and resource persons must simulate or recapitulate the need-reduction cycle of the user; they should be able to (1) simulate the user's need; (2) simulate the search activity that the user has gone through; and (3) simulate the solution-application procedure that the user has gone through or will go through. It is only in this way that the resource person can come to have a meaningful exchange with the user.

FIGURE 3 A Linkage View of Resource-User Problem-Solving

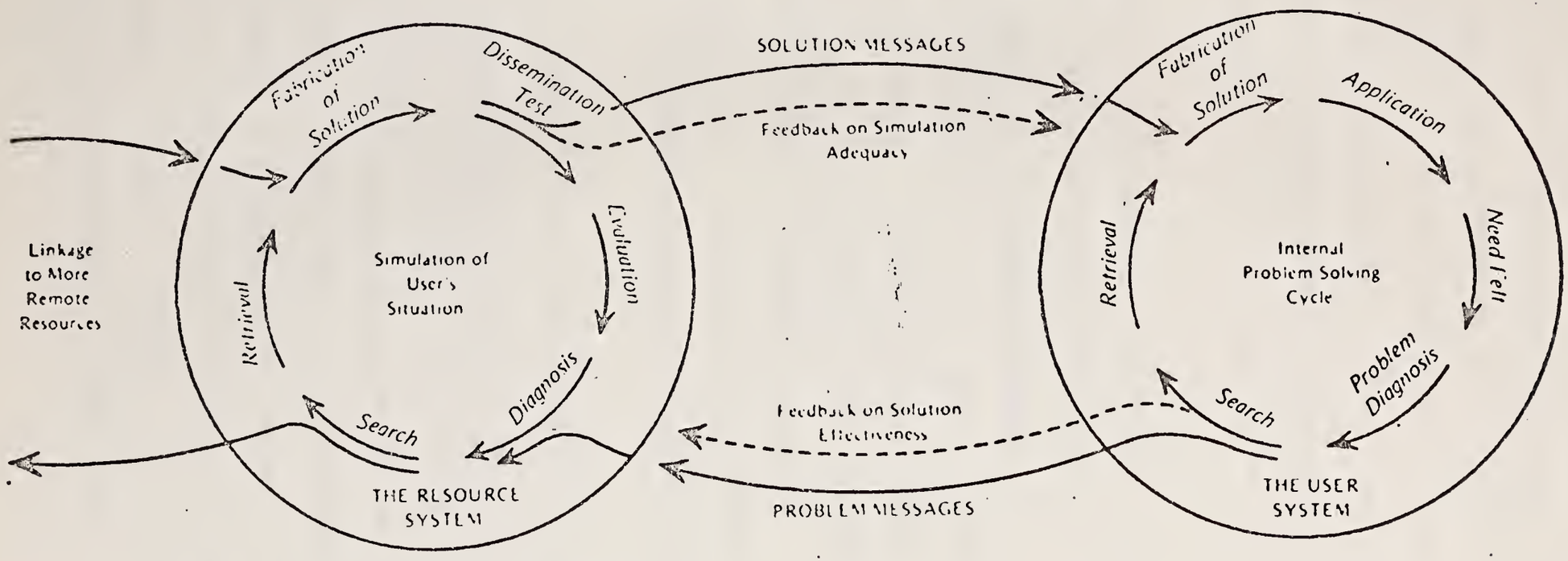

This reciprocity with the user includes testing the adequacy of the simulation model, itself. Only through an interaction and a feedback from the user can the resource person learn whether or not his model of user-behavior is correct. At the same time, the user should be learning and beginning to simulate resource system processes such as scientific evaluation and product development. Only through understanding, appreciating, and to some degree emulating such processes, will the user come to be a sophisticated consumer of R&D.

The development of reciprocating relationships goes beyond the point of improving individual problem-solving processes toward the creation of a stable and long-lasting social influence network. This collaboration will not only make a solution more effective, but, equally important, it will build a more effective relationship - a relationship of trust and a perception by the user that the resource is truly concerned, that the resource will listen and will have a quantity of useful information to pass on. The reciprocal and collaborative nature of this relationship further serves to legitimize the roles of consumer and resource person and it builds a channel from resource to user.

Linkage is not simply a two-person interaction process however; the resource person, in turn, must have access to more remote and more expert resources than himself, as indicated at the left hand side of Figure 3. In his efforts to help the user, the resource person must be able to draw on specialists, too. Therefore, he must have a way of communicating his need for knowledge (which, of course, is a counterpart of the user's need) to other resource persons and these, in turn, must have the capacity to recapitulate this same problem-solving cycle, at least to a degree. Only in this way will they be able to develop a functional relationship with each other.

Therefore, an effective change process requires linkage to more and more remote resource persons, and ultimately these overlapping linkages form an extended series which can be described as a "chain of knowledge utilization" connecting the most remote sources of expert knowledge in the university with the most remote consumers of knowledge.

It is possible to identify and differentiate within our total society a variety of knowledge-building, knowledge-disseminating, and knowledge-consuming subsystems, each with its own distinctive protective skin of values, beliefs, language, and normative behaviors. These could be referred to as the "research subsystem," the "development subsystem," the "practice subsystem," and the "user subsystem." At a gross level, the prime task of knowledge utilization is to bring these great subsystems into effective linkage with each other; the kind of reciprocal simulation and feedback relationship described above needs to be established at the interface between systems. Linkage between systems is the essential process in any effort at planned social change.

One other area where I think we might be making some progress is in what I call the micro-analysis of transfer phenomena. We have long been used to the communication formula of sender and receiver with a message flowing through some medium from the one to the other. In recent work with my mathematics colleague, Frank Harary (Harary and Havelock, 1972), we have derived a somewhat different formulation which we call sending and receiving demi-arcs. True transfer cannot take place unless a sending and receiving demi-arc are each poised to connect with the other, and it is no simple matter to bring this juxtaposition about. The formulation is important partly because it raises the status of the message receiver to co-equal and necessary partner to the sender. We also believe that through demi-arc theory we can demonstrate by deduction the necessity of two-way communication

advocating user responsibility

FIGURE 4 Knowledge Transfer May Require Sending and Receiving Demi-arcs

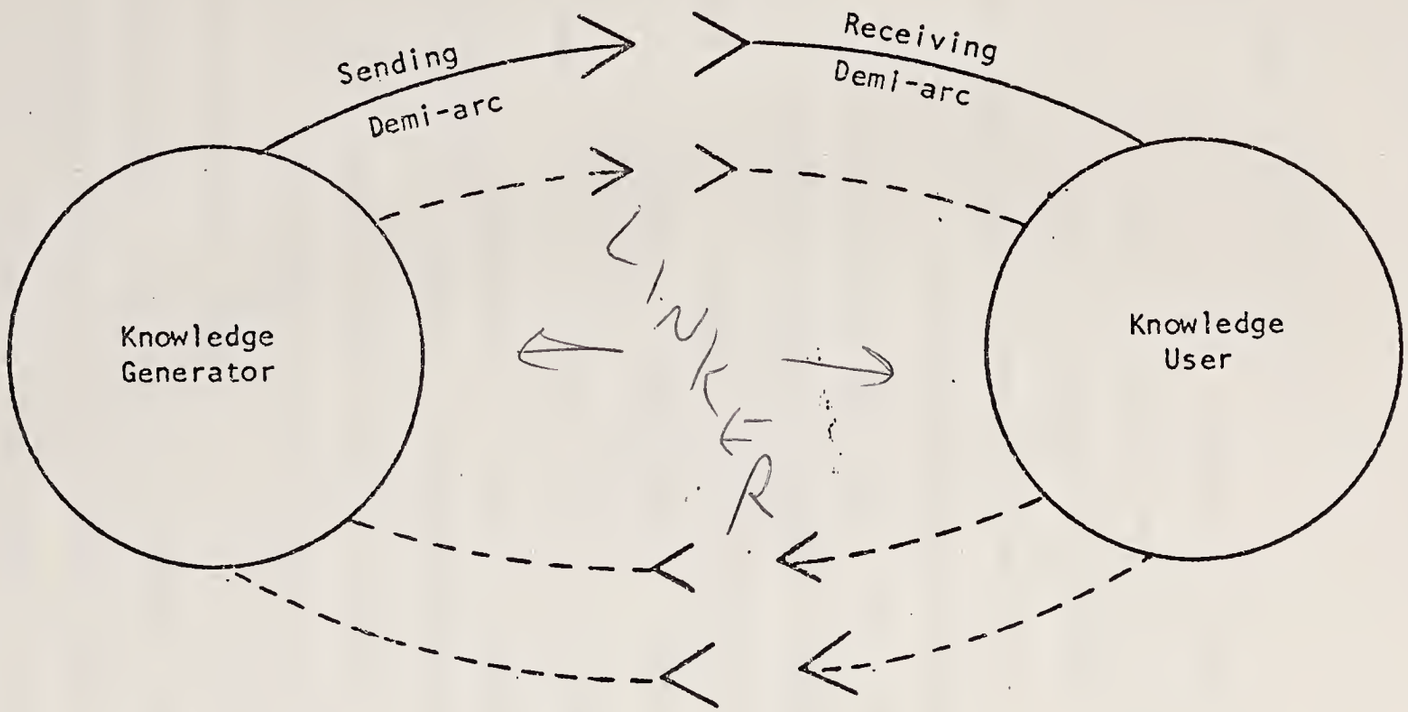

Complete knowledge transfer cannot take place unless sending and receiving apparatus are juxtaposed and synchronized. For complex messages this may require several rounds of meta-communication involving similarly coordinated demi-arcs.

between sender and receiver as a precursor to transfer of knowledge from the so-called "sender" to the so-called "receiver." Demi-arc analysis may also bring about a happy marriage between knowledge utilization theory and graph theory.

B. SOME RELEVANT EMPIRICAL STUDIES

From what I have said so far, I hope you can appreciate the fact that there is quite a bit of theory about and that that some of it might be useful in building a science of knowledge utilization. But I also said we have made some progress on the empirical side as well. I cannot in this paper review for you all the work which has been done but let me discuss one area where I think we are seeing some light. This is the whole area of networks and the function of leaders or stars in networks. From a strictly empirical viewpoint, the strongest set of studies on which we were able to draw concerned the diffusion of innovations. There has been a tradition of empirical research in this area dating back to the 1930's, mostly coming from rural sociologists studying the adoption of new farm practices. We have been fortunate to have had a few scholars available who were able to pull together the strands of this research tradition not only from rural sociology but also from medical and educational sociology and from studies of socio-technical intervention and innovation in many developing countries. In 1962, Everett Rogers was able to cite over 500 studies in his integrative summary of diffusion research up to that time (Rogers, 1962). By the time of his second edition, published 9 years later, the number had more than doubled to 1200, with a large number stemming from work in developing countries (Rogers with Shoemaker, 1971).

These studies have told us much that is relevant to the study of research utilization. One fact stands out above all others from their work, that individual human beings are embedded in and inextricably connected to social networks which largely govern their behavior with respect to any technical or social change: the great majority of people in all societies seem to adopt new ideas and new products largely because certain key members in their group have already done so. Most of us follow the lead of others whom we respect, and this is probably just as true for adopting research findings as it is for adopting products.

Diffusion researchers have also found that the pattern of innovation spread in a social system is somewhat predictable, following the lines of informal networks and cliques from peripheral innovators to opinion leaders to in-group members closely associated with the opinion leaders; then very rapidly diffusion spread, like a fulminating plague, the great majority following.

When we try to interpret these findings in terms of research utilization, we are faced with some difficulties. "Research" and "innovation" are not the same thing. Usually an innovation to be studied needs to be in the form of a product or a clearly definable service or practice. It also has to be stable in form so that it is the same thing at Time-Two as it was at Time-One and the same thing in the hands of the receiver as it was in the hands of the sender. None of these things can quite be so true for research as such. Research findings may suggest stopping old habits (like smoking cigarettes) much as adopting new ones; they are generally not transmitted in product form and they are almost always transformed by sender and receiver, particularly if

genuine utilization is to be the outcome. These points do not invalidate the diffusion research findings, but they temper them a little, and we need to know more. It is especially important, for example, to find out how scientific knowledge about innovation affects adoption rates. We do know, for example, from a study by Morgan, et al. (1966), that the reported use of auto seat belts was positively related to both formal education and to a generally receptive attitude toward modern science. It is also reported (Tichenor, 1971) that public use of science content in the media is highly correlated with socio-economic status. Perhaps we can draw an inference here that science does have an impact filtered through social elites. If these elites are also the pacesetters for innovation, then there is some hope that the blind adopters further down the line will not be led too far astray.

A second set of findings with some importance to research utilization comes from the study of scientific communication which was really just getting going in the very early 1960's but which now has accumulated quite a backlog of consistent findings. Landmark studies in this area were conducted by William D. Garvey and his associates, first at the American Psychological Association, and then at Johns Hopkins. The APA study* was a rather thorough series of empirical investigations which mapped out both the formal and informal channels by which research knowledge in psychology was communicated from one person to another. They found that communication in psychology took place within a rather efficient and well organized closed system. Generally, scientists talked to scientists with information dribbling out

*Reported in many sources, e.g., Garvey, W.D. and Griffith, B.C.,(1966, 1967a, 1967b).

to the practitioners and to the general public only when it was thoroughly digested and rather old. They noted that both formal and informal communication channels served important and complementary system functions. Formal channels reach a larger audience but are less current than informal ones.

The role of informal channels is further explored by Diana Crane (1972) through studies of what are called "invisible colleges" within the scientific community. It turns out that most scientific disciplines are organized into tight little social islands of specialists who exchange information on their on-going work, and who cite each other in their published work over and over again. The clusters tend to be led by a few stars, usually located at prestigious universities, who in many newer areas are also the pioneers of the field. The network becomes a network not because all members are connected to each other but because almost all members are connected directly to stars.

In general, the more established the scientific discipline, the more effective are its modes of internal communication, both formal and informal. Unfortunately, however, there have been few studies which have traced the flow of communication at the fringes of a discipline, particularly where it overlaps with a related area which is more applied or practice- and product-oriented. The few available studies relevant to this matter suggest that there may be formidable barriers at these interfaces partly attributable to the very internal strength of the invisible colleges, themselves, and partly attributable to the lack of motivation to *transform, interpret,* and *simplify* the knowledge communicated for the benefit of users on the periphery. Mackie and Christenson (1967) found this to be the case when they tried to find out why millions spent on learning research by the Navy had such little effect on changing Navy training programs and other potential applications. They concluded that learning researchers,

while maintaining a very tightly integrated internal communication system, did little and cared little about translating and integrating their work with an eye to applications by the Navy or anyone else.

Diffusion and communication research studies over the years have accumulated quite a bit of evidence on the existence of the phenomenon known as the "opinion leader." Most of us, it seems, are influenced to change by observing the behavior and following the advocacy of certain people in our own social circle whom we admire and respect. This is not a startling finding, perhaps, but it is somewhat surprising in its total pervasiveness to all sectors of communication including research utilization. The fact that there are stars in communication networks who tie the networks together and set the norms for others is well established by studies such as those on scientific communication cited earlier. A more relevant finding for us here is the fact that some *stars also perform a vital bridging function not only between disciplines but between research and application.* For example, in a series of studes of information flow in applied research and development laboratories Marquis and Allen (1966) and their co-workers at MIT have found that most engineers and development-oriented specialists rely very little on direct reading or other communication with the relevant adjoining scientific disciplines, but there are almost always one or two individuals in an applied laboratory who are in very good touch with such external sources and who are relied on by their colleagues for such knowledge. Thus, they serve as gatekeepers for the flow of technical information from basic to applied science.

Indeed, opinion leaders in applied research areas may play an even more significant bridging function. In a study of the flow of research knowledge from highway safety researchers to national decision makers, Havelock and

Markowitz (1971) found that a small cluster of researchers, nominated most often by their colleagues as "doing the most important work", constituted a very distinct elite which performed many vital functions not only in tying sub-specialties together but also in bridging between disciplines, in leading the way towards new ideas, and in bridging between the research community and the national decision makers. The research opinion leader (ROL) profile which emerged is summarized as follows:

> Among the characteristics associated with them were (a) higher education level, (b) older age, (c) more years in highway safety field, (d) more likely to be in a scientific rather than an engineering discipline, and (e) more likely to be employed by a university than by government or industry.
>
> More importantly the ROL's seemed to be the most dedicated and committed individuals doing research on highway safety; they rated their work as "most relevant" more often, attended more conferences, read more, and participated more in safety organizations.
>
> ROL's also seemed to be highly conscious of their own leadership position. They usually saw themselves at the center of activity in their specialties, and more than other researchers they see themselves as effective in reaching decision makers and influencing decisions; they are especially oriented toward national decision-making and are apparently more effective than their colleagues in influencing decisions in the federal government and in the auto industry.
>
> ROL's also share similar views to one another on a large range of safety issues. They generally advocate "new guard" positions, taking a systems view, being sceptical of the efficacy of traditional countermeasures, and rejecting the "nut-behind-the-wheel" philosophy. At the same time, they seem to be better informed than their colleagues on new research outside their own fields.
>
> All these findings taken together suggest to us that the ROL's are a cohesive, dynamic, and progressive force within the research community which forms a genuine bridge to the decision makers.

Terms like "opinion leader," or "gatekeeper" apply generally to roles in the social system which occur naturally. There have also been some studies of roles which have been created for the specific purpose of improving re-

search dissemination and utilization. The most venerable example of this phenomenon is the county agent who constitutes the personal link to the farm community in the Cooperative Extension Service. A number of diffusion studies have noted agent contact as an important stimulator or adoption, but there have been very few studies which give any whole view of what this role is all about (an exception is Stone, 1952). In the late 1960's the U.S. Office of Education decided to emulate the County Agent model on a modest trial basis as a human extension of the previously developed educational archive known as "ERIC" (Educational Resource Information Center). Each of three state education agencies was to have an information center which could search ERIC and reproduce written materials on any educational topic on demand. Attached to the center would be two or three field agents who would go out to visit schools in various parts of the state, help teachers and administrators to identify needs and problems, and then feed back to them whatever information they could find which was relevant. There was thus a clear intent to insert research information into a user-controlled problem-solving sequence. Although the pilot program involved only seven agents in three states, the federal authorities had enough wisdom to sponsor a thorough and detailed evaluation study which was both quantitative and at the same time rich in clinical descriptive detail. The two volume report thus forms a valuable guide to the planning of future programs of this kind and to the training of this type of change agent. The findings reported by Sieber, et al.(1972) and summarized later by Sieber (1973) indicate that research knowledge-based agents can be extremely effective not simply as conveyors of facts but as catalysts for a change process within the individual client and the school system of which the client is a member. Their impact as change agents was measurably greater than subject-matter specialists or other persons inside or outside the school

system. In the judgment of the clients, themselves, meticulously documented by the Sieber team, "the agent's contribution excelled that of all other individuals within the client's professional orbit." (Sieber, et al, p. 548) The authors suggest some reasons why this might be so: "the agent was not introduced to clients as an instrument of change, but as a conveyor and interpreter of available knowledge." Expertise is independent of the agent and hence, "(1) there is no status differential between client and agent owing to the latter's greater knowledge or higher organizational rank, and (2) the agent will not necessarily be held responsible for poor information." "The field agent also plays the part of a change-agent but only after his role as a conveyor of information has legitimized his presence and precluded suspicions of his pushing or imposing himself on clients." (Sieber, et al., 1972, pp. 538-541). As Sieber (1973, p. 95) sums it up "the Pilot State Program was a highly successful venture not because it operated smoothly and effectively from the beginning, but because of the way in which myriad problems were resolved so that a model emerged for future extension and retrieval programs." It also seems clear that this emerging knowledge linker model has relevance not just in education but in community development, social service, population planning and many other "need" areas.

C. NEEDED: R&D ON KNOWLEDGE UTILIZATION

So much for the theory that exists and a few empirical findings. I have offered only a sampling to indicate some of the areas we are pursuing. I would now like to conclude by saying where we should go from here. Basically two things are necessary if we think that optimum research utilization is important. First we need more research on it, and second we need to develop improved processes by applying the implications of that research to the existing mechanisms of information transfer.

First then, how should this research be undertaken? I have suggested one paradigm which lays out functions in an orderly manner (Figure 1). We might take this list or some other which represents more of a consensus on what the chief functions are and then prioritize the functions by judging how well each is performed today and how important each will be for the knowledge utilization systems of tomorrow. These value choices then become the basis of organized research efforts in which we study the gaps and barriers and in which we search for ideal models from existing practices which might later apply to many situations around the world.

For example, we have just finished a project in which we compared six U.S. federal information services in different topic areas (Havelock, Markowitz, and Ramirez, 1974). One of these, the Congressional Research Service* has developed a capacity for very rapid targetted replies to questions addressed to them by congressmen. Replies are tailored to the length and depth requested and in most cases represent a full digestion and interpretation of all available information. This is a remarkable operation, and I fear, one which would be impossible to duplicate for a large number of users across the world. Nevertheless, such systems may have components which are transferable. Certainly they should be studied to determine which of the many social and technical innovations in the information field are appropriate components of a world system.

This brings me to my second point, that such research on knowledge utilization must be applied to improving the existing system. There is already a wealth of knowledge on information flow, the diffusion of innovations, communication, social psychology and the economics of scientific information as a commodity. There has also been a great deal written on the dynamics of change in individuals and organizations, but we have not put this helter-skelter of findings and theory together in a unified approach to knowledge use.

*Formerly known as the Legislative Reference Service.

We have some evidence from a recent project in our center that there is a tremendous thirst for improved utilization procedures among the highest layers of government. In his project, my colleague Nathan Caplan selected approximately 300 policy makers at assistant secretary, undersecretary, and other super grade levels, and asked them to respond to a two hour interview concerning every aspect of social science use in policy making. With few exceptions, the response was tremendous. It was clear that these people were glad that such a project was being done and were eager to see what they could learn from it.

All this leads me again to raise the question with you. How important is research utilization? If it is very important, then we must design the WISE system so that research on utilization process is a integral part of it and so that the results of such research continually feed back to the WISE governors to help them steer a better course.

REFERENCES

Archibald, Kathleen A.
The Utilization of Social Research and Policy Analysis, St. Louis, Mo.: Washington University, 1968.

Caplan, Nathan
Social Science Utilization and Social Policy at the National Level. Special grant from the Institute for Social Research as part of an institutional grant from the National Science Foundation. Work in progress 1974.

Crane, Diana
Invisible Colleges: Diffusion of Knowledge in Scientific Communities, Chicago, Ill.: University of Chicago Press, March, 1972.

Garvey, William D. and Griffith, Belver C.
"Studies of Social Innovations in Scientific Communication in Psychology," American Psychologist, 1966, Vol. 21, No. 11, pp. 1019-1036.

Garvey, William D. and Griffith, Belver C.
"Scientific Communication: The Dissemination System in Psychology and a Theoretical Framework for Planning Innovations," American Psychologist, February, 1965, Vol. 20, No. 2.

Garvey, William D. and Griffith, Belver C.
"Scientific Communication as a Social System," Science, 1967, Vol. 157, No. 3792, pp. 1011-1016.

Garvey, William D. and Griffith, Belver C.
"Communication in a Science: The System and Its Modification" in de Reuck, A. and Knight, J. (eds.), Communication in Science: Documentation and Automation, A Ciba Foundation Volume, Boston: Little, Brown, 1967, pp. 16-36.

Glaser, Edward M.
Utilization of Applicable Research and Demonstration Results, Final Report to Vocational Rehabilitation Administration, Dept. of Health, Education and Welfare, Project RD-1263-G, March 1967.

Harary, Frank and Havelock, Ronald
"Anatomy of a Communication Arc," London, England: Human Relations, Vol. 25, No. 5, November, 1972, pp. 413-26.

Havelock, Ronald G. with Guskin, Alan, et al.
Planning for Innovation through Dissemination and Utilization of Knowledge, Ann Arbor, Michigan: Institute for Social Research, Center for Research on Utilization of Scientific Knowledge, University of Michigan, July, 1969 (Second Printing, January, 1971).

Havelock, Ronald G. and Lingwood, David A.
R&D Utilization Strategies and Functions: An Analytical Comparison of Four Systems. Final Report to the U.S. Department of Labor, Contract #82-26-72-04. Ann Arbor, Michigan: Institute for Social Research, University of Michigan, 1973.

Havelock, Ronald G. with Markowitz, Elizabeth
A National Problem-Solving System: Highway Safety Researchers and Decision Makers. Final Report to the National Highway Traffic Safety Administration, U.S. Dept. of Transportation, Contract #FH-11-6900. Ann Arbor, Michigan: Institute for Social Research, University of Michigan, May, 1971.

Havelock, Ronald; Markowitz, Elizabeth; and Ramirez, Bonnie
Federal Information Systems: Six Case Studies, Part of the Final Report to the Social and Rehabilitation Service, U.S. Department of Health, Education and Welfare, Project #22-0-55893. Ann Arbor, Michigan: Institute for Social Research, University of Michigan, 1974.

Lingwood, David A. and Morris, William. C.
Study of the Forest Service Research Branch. Final Report in progress to the U.S. Forest Service, U.S. Department of Agriculture, 1973.

Mackie, R.R. and Christensen, P.R.
Translation and Application of Psychological Research, Technical Report 716-1, Goleta, California: Santa Barbara Research Park, Human Factors Research, Inc., 1967.

Marquis, D.A. and Allen, T.J.
"Communication Patterns in Applied Technology," American Psychologist, 1966, Vol. 21, pp. 1052-1060.

Rogers, Everett M.
Diffusion of Innovations, New York: The Free Press of Glencoe, Inc., 1962.

Rogers, E.M. and Shoemaker, F.F.
Communication of Innovations: A Cross-Cultural Approach. New York: Free Press of Glencoe, 1971.

Sieber, S.D.
"The Pilot State Dissemination Program," Journal of Research and Development in Education, 1973, Vol. 6, No. 4, pp. 88-95.

Sieber, S.D., Louis, K.S., and Metzger, L.
The Use of Educational Knowledge, New York: Bureau of Applied Social Research, Columbia University, 1972.

Stone, John T.
How County Agricultural Agents Teach, East Lansing, Michigan: Michigan Agricultural Extension Service, Mimeo Bulletin, 1952.

NATIONAL ACADEMY OF SCIENCES

National Research Council - Highway Research Board

pre-undetermined for patented assistance on machine-readable UMTA abstracts

TITLE: Proposal for the support of the Highway Research Board by the Urban Mass Transportation Administration, U. S. Department of Transportation

BACKGROUND

The Highway Research Board was established as a unit of the National Academy of Sciences in 1920 at the request of the American Society of Civil Engineers, the Bureau of Public Roads and a number of other agencies interested in the coordination of research dealing with highway transportation and the dissemination of findings. The Board was established as an arm of the National Academy of Sciences because of the Academy's reputation for objectivity and ability as a scientific advisory body to the government. In its early years, the Board was concerned largely with research dealing with the financing of large public works programs and with physical research into the performance of materials and the design of pavements and structures. Later, while administration, economics, design and materials continued in importance, additional work in the fields of traffic and operations and pavement maintenance was undertaken.

In the late 1950's, it became apparent that the major ground transportation problems were in the cities and that the highway mode of transportation, while dominant in the urban areas as elsewhere, should be augmented in dense urban areas by other forms of mass transit (e.g., rail). Further new, more efficient ways to utilize buses were sought. It was clear that if the urban transportation crisis were to be alleviated, highway researchers could not be independent of mass transit researchers, or of those involved with the socio-economic concerns of the people in urban areas.

In recognition of these facts, the Highway Research Board reorganized and revised its bylaws so that the HRB scope now reads:

> The Board will give attention to all factors pertaining to the understanding, devising and functioning of highway and urban transportation systems and their interrelationships with other aspects of total transportation...

Furthermore, over the past few years, the Highway Research Board, in recognition of its responsibilities in urban mass transportation, has significantly increased its committee activity, Annual Meeting program space, and conferences and workshops in the field of urban mass transportation. Until now, this work has been supported entirely by the highway sponsors of the Board's activities. The Executive Committee of the Highway Research Board has suggested that it would be in the interest of all concerned if UMTA were actually to become a significant supporter of HRB activities as described in our scope above. It is also believed that the Board's ability to make meaningful contributions in the urban field would be improved considerably with such support, and if the Administrator of UMTA were a participant in the deliberations of the Executive Committee.

The intent of the general support arrangements such as proposed herein is to permit the Highway Research Board, under the direction of its Executive Committee, to conduct the field visit program, its Annual Meeting and seminars, and to carry out the publication program and information transfer activities, and to maintain its extensive committee activities, all in the interests of our national transportation system. The amount requested from the Urban Mass Transportation Administration, $100,000 for the year beginning May 1, 1971, represents about five percent of the total cost of these regular continuing activities of the Highway Research Board during the twelve month period.

PROPOSAL

The Highway Research Board of the National Academy of Sciences proposes to undertake activities and services as described below for the Urban Mass Transportation Administration for the period May 1, 1971 to April 30, 1972.

The National Academy of Sciences, acting through the Highway Research Board and in cooperation with the Urban Mass Transportation Administration, shall provide the necessary qualified personnel, facilities and such other services and materials as may be required by the Urban Mass Transportation Administration for the:

1. Support and stimulation of the urgent national urban transportation program of the Urban Mass Transportation Administration.
2. Dissemination of urban mass transportation research findings.
3. Coordination of such urban mass transportation research activities.
4. Operation of the Highway Research Information Services to include urban mass transportation research information.

In performing the services noted above, the National Academy of Sciences agrees to use its best efforts to:

1. Advise on and assist with the development of a national program of mass transportation research.
2. Encourage the conduct of such research by highway and transportation departments in the states, by universities and industry.
3. Collect information on urban mass transportation research whether the same be in progress, completed or proposed.

4. Provide and maintain a national clearing house and correlation service with respect to urban mass transportation research activities for the purpose of advancing mass transportation technology and administration.

5. Provide a forum for the presentation of research papers and reports.

6. Formulate and furnish advice with respect to mass transportation research and individual research projects considered worthy of undertaking.

7. Correlate and evaluate the results of urban mass transportation research work.

8. Arrange for the general dissemination of results of research activities to governments and other bodies as well as to individuals and the general public.

9. Effect exchange agreements with other information services in allied fields in order to maximize information coverage and minimize duplication. These other services will be in the United States and abroad.

The contractor shall furnish to the Contracting Officer a final report no later than the scheduled completion date of this contract and, upon request, such other reports as may be desired concerning the progress and results of the urban mass transportation research work provided for in this agreement.

It is proposed that the new contract will be in effect from May 1, 1971 through April 30, 1972, and that it may be renewed annually thereafter under such terms and conditions as may be mutually agreed upon by the parties hereto.

Statement for bearing on this effort.

Alex Abraham - funds for Urban Tram. Report.

TRIC MANAGEMENT AND DOCUMENT PROCESSING HANDBOOK

April 6, 1972

[NOTE: This document has been prepared as a general procedural guide for personnel of the Transit Research Information Center. As such, it is intended solely for internal use and should not be released without authorization.]

CONTENTS:

Margin - Right - 15
Left - 85
12

SECTION I: Normal Processing for New Reports to be Input to NTIS

1. Receive copies. They may be brought directly from the UMTA mailroom or provided by the respective project manager.

2. Obtain approval from project manager for release to NTIS. Some reports have already been reviewed in advance of publication, and these may be processed directly for transmittal. Often, however, the reports require lengthy review prior to approval. One or more copies of this latter type should be supplied to the project manager, and the rest should be stored. Complete a green card to note the storage of reports awaiting approval. The information on this card should include the project number, report title, date received, and the location in the storage bins (e.g. "Third Shelf, Center).

3. Receive approval from project manager. Destroy green card. Proceed with transmittal to NTIS.

4. Transmittal Documentation. [See Section II for additional instructions.]

   a) If the report is a Technical Study (Sec. 9) or a university research (Sec. 11) paper, fill out five copies of a Bibliographic Data Sheet (Form NTIS-35) and one salmon-colored Accession Notice card (Form NTIS-79).

   b) If the report is an RD&D (Sec. 6) paper, fill out six copies of Form DOT F 1700.7 and one salmon-colored NTIS-79 card.

   c) If only one copy of the report is available for input to NTIS, complete Form NBS-815 in order to receive a complimentary copy for the TRIC files.

   d) If the report is more than two years old, a letter stating its saleability (ie. demand of at least ten copies per year) must be enclosed.

   e) Note: If responsibility for preparing abstracts is divided between in-house and external personnel, two copies of NTIS-79 should be filled out and attached to the reports sent to NTIS.

5. Attach one copy of the Bibliographic Data Sheet (BDS -- Throughout the following instructions, BDS will refer to either Form NTIS-35 or Form F 1700.7 as applicable.), the Accession Notice Card, and the NBS-815 (if applicable) to the best available copy of the report. (Use the original copy if it is available. Be sure to have thoroughly checked the report to ensure its compliance with NTIS input specifications which are outlined in DOT Order 1700.-18A (See Appendices 1 and 2). In particular, be certain that <u>all</u> pages are numbered and completely legible for reproduction. Pages that are not numbered already should be numbered in pencil, and faint letters or numbers in the text should be traced over. Be certain that all required disclaimer statements appear in the report, and that the title and author are clearly identifiable. (Not infrequently the title differs from the cover to the title page.)

SECTION I (continued):

6. Insert one copy of the BDS into the appropriate looseleaf volume for your records. These volumes are filed alphamerically by report number. Staple together all remaining copies of the BDS and insert them into the appropriate folder. Store remaining copies of the report.

7. Mail the archive copy and approximately four other copies of the report to NTIS. The so-called archive copy should be the best available reproduction and the copy to which the transmittal documentation is attached. NTIS requires at least one and no more than 25 copies of all reports input; use discretion in selecting the number of copies to be sent so that internal distribution requirements can be satisfied.

8. Transmittal to OMB. (See Appendix 3.)

   a) One copy of all university research reports input to NTIS must be sent to OMB. Enclose the appropriate form and record the report number and date. Mailing address appears on the form.

   b) One copy of all technical study reports prepared for areas of greater than 750,000 SMSA population must be sent to OMB. Use the appropriate form and record the number and date.

9. Receive the salmon-colored NTIS-79 card with the accession number attached. File same.

10. Enter the PB number on all BDS forms, including the one filed in the looseleaf book.

11. Distribute reports. (See Section III.)

12. Insert document into TRIC system through standard procedures. (See Section IV.)

SECTION II: Transmittal Documentation (See Appendix 4.)

1. Form NTIS-35, the Bibliographic Data Sheet, is used for input of all technical study (Sec. 9) and university research (Sec. 11) reports.

2. Form DOT F 1700.7 is used for input of all RD&D (Sec. 6) reports.

   [NOTE: DOT Order 1700.18A requires the use of F 1700.7 for transmittal of RD&D reports. Conceivably, at the abstractor's discretion, this form could be used for the transmittal of all UMTA reports. However, because NTIS currently retrieves reports by the descriptors and identifiers assigned on the BDS, form NTIS-35 may be preferable for transmitting reports per instruction #1 above.]

3. Generally, the completion of forms noted in instructions #1 and 2 above requires a similar procedure, as follows:

   a) REPORT NUMBER: UMTA employs a standard series of report numbers which, regardless of any unique number assigned by the performing organization, should appear in Box #1 of the BDS. A six-field alphameric system is used, as follows:

      Field 1: UMTA

      Field 2: The two-letter abbreviation for the state in which the project was conducted, per the assigned UMTA project number. "Interstate" projects are abbreviated IT.

      Field 3: The two-digit number describing the section of UMTA's legislation under which the project was conducted. Therefore, the third-field digits for an RD&D project are 06; for technical studies, the third-field digits are 09; for university research, the third-field digits are 11.

      Field 4: The four-digit MACS (UMTA's Management Accounting and Control System) project number.

      [NOTE: In effect, the standard three-field UMTA project number comprises fields 2, 3, and 4 of the report number entered in box #1 of the BDS.]

      Field 5: The last two-digits of the year in which the report was written.

      Field 6: A unique numerical to identify the sequential placement of a given report among all reports produced under the same project. (I.E. The sixth-field digit for the first report produced under a given project is 1; the second report produced under that same project is 2; etc.)

SECTION II (continued):

On rare occassions, reports prepared internally within UMTA are input to NTIS (e.g. the RD&D Directory, Urban Mass Transportation Abstracts, and various software manuals or symposium proceedings). Such reports do not, of course, have any assigned UMTA project number. Therefore, the report number assigned to such reports is as follows.

Field 1: UMTA

Field 2: The letters which identify the performing organization. (i.e. RDD, TRIC, UPP, etc.).

Field 3: The last two-digits of the year in which the report was written.

Field 4: A unique numerical to identify the sequential placement of a given report among all reports previously input which share the same second-field letters. (e.g. The original volume of Urban Mass Transportation Abstracts was assigned the report number: UMTA-TRIC-72-1. The first supplement, to be issued during 1973, will be assigned the report number: UMTA-TRIC-73-2.)

b) Do not fill in boxes 2, 3, 6, 14, or 22.

c) Boxes 4 and 5 are self-explanatory. Note, however, to be certain that the title entered in box 4 is consistent from the report cover to the title page. Type the title in capitals; type the subtitle (if any) in lower-case.

d) Only record the names of individuals in box #7. Do not include their titles (e.g. Associate Professor). Only enter authors in Box 7 if they are clearly identified as the preparer(s) of a given report. Most RD&D and technical study report do not identify a specific individual as the author.

e) Fill in Box 8 only if the report has been assigned a unique number by the performing organization. Some research institutes, for example, employ their own numbering system, and this should be entered in Box 8. Do not confuse the UMTA series report number with the performing organization number.

f) Box #9 should include the name and address of the organization which actually prepared the report. Where, for example, a consulting firm prepared a technical study on behalf of a public agency or where a subcontractor prepared an RD&D report for a prime contractor or a program manager, the name and address of these performing organizations should appear in Box 9, and the name and address of the public agency or prime contractor should appear in Box 15.

SECTION II (continued):

g) The standard UMTA project number should appear in Box 10. The entry in Box 10 should match fields 2, 3, and 4 of the report number entered in Box 1 (except where the report was prepared internally and therefore not assigned a report number).

h) UMTA should always be the sponsoring organization.

i) The contract/grant number may be entered in Box 11. This is the actual contract number (e.g. DOT-UT-###) which may be obtained from records in UAD-10. The contract number is rarely printed in the report.

j) In Box 13, it is usually sufficient to say FINAL or INTERIM. Use additional information where, for example, the report is one of a series and it specifically covers a given period of time. (e.g. INTERIM - Phase I, 9/70-9/71)

k) Keywords entered in Box 17a on Form NTIS-35 should be taken from the Thesaurus of Engineering and Scientific Terms. Identifiers entered in Box 17b should include any other key words from the abstract not adequately covered in the Thesaurus. Thus a report on headway maintenance for PRT systems should at least include personal rapid transit and headway maintenance as identifiers, since these key words do not appear in the Engineers' Thesaurus.

l) Any keywords appropriate to the abstract may be entered in Box 17 of DOT F 1700.7. It is, however, desirable to include among these any from the Thesaurus that are applicable.

m) The distribution statement should always read: Releasable to the Public. Available from NTIS, Springfield, VA 22151.

n) The security classifications should always read: UNCLASSIFIED.

o) Enter the number of pages in Box 21. Count <u>every</u> page, including the title page, introductory text, tables of contents, charts and illustrations, appendices, etc., and add one page for the BDS.

4. Form NTIS-79, the Accession Notice Card, is the means by which NTIS informs you that a report has been processed and is available for sale to the public. On the front side, put <u>your</u> name and address. On the reverse side, fill in boxes 2, 3, and 9 only. The report identifying information entered in Box 3 is merely for your convenience; usually the report number and title are sufficient. Occassionally when a report is in particular demand, the project manager will request that you also fill in Box 6.

SECTION II (continued):

5. Form NBS-815 is self-explanatory. Its purpose is to alert NTIS that you have submitted your only copy of a report and that a complimentary copy from them is requested.

6. Transmittal documentation should be stapled to the front cover of the archive copy of all reports submitted to NTIS.

7. Prepare separate transmittal documentation for each report submitted to NTIS.

SECTION III: Distribution

1. See Section IIIB of UMTA's External Operating Manual which specifies the number of copies for each type of report that must be supplied to UMTA by contractors and grantees.

2. All distribution outlined below, except where otherwise specified, occurs after accessioning by NTIS and release for internal distribution (of reports not to be accessioned by NTIS) by the project manager.

3. Research, Development and Demonstration Reports:

   a) One copy for TRIC.

   b) At least one and no more than six (two are preferable) for the DOT Library in Room 2200. Attach a copy of the BDS with accession number and price noted.

   c) One copy of the BDS with accession number and price noted for HRIS. (At this time, a regularized channel for inputting UMTA abstracts to HRIS has not been implemented. Establishment of such a process should be undertaken.) For RD&D reports not input to NTIS, a copy of the TRIC abstract with NTIS accession number and price should be sent.

   d) Additional distribution of RD&D reports is a TRIC service. Project manager may supply additional copies of a report to be distributed per a specific list, or you may be requested simply to store the copies and fill demands as they are received.

4. Technical Study Reports:

   a) Four copies of the report should be supplied to the respective project manager prior to transmittal or distribution. One copy of the BDS with accession number and price noted should be sent to the project manager following input to NTIS.

   b) One copy of the report for TRIC.

   c) One copy of the BDS (or TRIC abstract for reports not accessioned by NTIS) to HRIS. See instruction #3c above.

   d) Copies of the report and BDS to DOT Library per instruction #3b above. Reports not accessioned by NTIS should also be transmitted to the DOT Library with that fact noted on the routing slip.

   e) One copy of the report to Joanna Paxson, UPP-1.

   f) One copy of the report to Mr. Segal, HUD, Room 7141.

   g) One copy of the report to Don Morin, HHP-24, Room 3301.

SECTION III (continued):

h) NOTE: Technical Studies prepared for areas of greater than 750,000 population should be transmitted to OMB with appropriate documentation prior to accessioning by NTIS. (See Section I, instruction #8.)

5. University Research Reports:

a) One copy of the BDS with accession number and price noted should be sent to the project manager. Processing of reports not accessioned by NTIS need not be reported to the project manager.

b) One copy of the report for TRIC.

c) One copy of the BDS (or TRIC abstract for reports not accessioned by NTIS) to HRIS. See instruction #3c above.

d) Copies of the report and BDS to DOT Library per instruction 3b above.

e) One copy of the report to ~~Mr. Jones, UPO-1.~~ PREMO UCA-1

f) One copy of the report to Mr. Williams, UCR-1.

g) One copy of the report to Mr. McManus, ~~UPP-1.~~ UTP-1 UPP-1

h) One copy of the BDS (or TRIC abstract for reports not accessioned by NTIS) to Dr. Hemmes, URD-1. Attach a memo on which he can indicate whether he desires to see a full-text copy of the report. Route through Henry Nejako.

SECTION IV: Input to TRIC

1. All UMTA reports are input to TRIC and TRIC abstracts should be prepared for all reports, except those specifically restricted for internal use.

2. Preparation of the TRIC abstract:

   a) Standard format to be employed can be readily observed from existing abstracts. Abstracts should be single-spaced, typewritten on 8 1/2 x 11" white bond with sufficient margins on all sides.

   b) Whenever possible, the abstract should briefly state the purpose of the report, its general topical focus, significant background information, research approach and methodology, and principal conclusions.

   c) Verbatim use of the BDS abstract or introductory material in the report should be made with the abstractor's discretion. Commonly, however, the TRIC abstract should be somewhat more detailed, and it can run to a maximum of about 400 words.

   d) Select at least two and no more than 12 keywords from the index of key word subject headings. Keywords should reflect not only the major subject contents of the report, but also significant ancillary topics covered.

3. Preparation of TRIC indexes: (See Appendix 5)

   a) TRIC employs four types of color-coded card file indexes. Appropriate entries to each are required for all report input to TRIC, including those which are for internal use only and are not abstracted.

   b) Blue Card Index: The index of 3x5" blue-colored cards is arranged alphamerically by index number. A divider tab is used to separate the cards for reports produced under each project. Information on the blue cards includes title, author, date, project number, index number, and NTIS accession number (if any). The title line should be capitalized.

   c) White Card Index: The index of 3x5" white-colored cards is arranged alphabetically by title. Information on the white cards is identical to that on blue cards. (NOTE: Originally, the NTIS accession number was entered only on the blue cards; in the future, it is recommended that this order number be noted on all index file cards.

   d) Red Card Index: The index of 3x5" red-colored cards is arranged alphabetica-ly by author. On these cards, the author is indicated at the top, with the title on the second line below. The author should be capitalized. Other information on the red cards is identical to that on blue and white cards.

SECTION IV (continued)

NOTE: Many reports have both an individual and organizational author. On the blue and white cards, the individual's name should appear first, followed by the organization in parentheses. Red cards for such reports should be filed under both the individual and organizational authors. If the report was prepared by one organization for another (e.g. Alan M. Voorhees & Assoc. for The City of Boise), indicate this information in parentheses after the organizational author. Do not, however, file a red card under the organization for which a report was prepared if it was not specifically the performing organization. (See appendix 5.)

e) The report should also be indexed by geographical coverage in the 6x8" gray-colored file. Separate cards are maintained for each geographical area (usually by city name), filed alphabetically by state. The geographical index does not necessarily reference the actual location of the performing organization's headquarters. Entries to the geographical index only pertain where the report contains substantive information relating to a specific geographic area. Thus a university study of transit planning in Atlanta performed under a grant to Harvard College will be referenced only under Atlanta, Georgia. Entries to the geographical file are in the form of a short description of the subject and the index number. (See appendix 5.)

4. Assignment of Index Numbers:

a) All reports in TRIC are assigned a unique three-field alphameric index number, in the configuration: #-LLL-##.##. See page v of "Urban Mass Transportation Abstracts" (October, 1972) for a description of the indexing system.

b) The first field digit refers to the functional grant category which funded the project under which a given report was prepared. Originally, four first-field digits were used when UMTA made a substantive distinction between research-development and demonstration projects. Under this old system, a first-field designation of "1" was used for demonstration reports and "3" was used for R&D. The advent of MACS project numbers obviated the need for separate indexing categories by combining all RD&D projects under a common project numerical. Consequently, the first-field digit "1" is no longer employed for indexing reports in TRIC. The assignment of first-field digits at the present time is as follows:

SECTION IV (continued)

1 = not used

2 = Technical Studies (Sec. 9)

3 = RD&D (Sec. 6)

4 = University Research (Sec. 11)

c) The second-field letters refer to the state in which the project was undertaken. Interstate projects are abbreviated INT. Reports produced under the HUD New Systems Study in 1968 are designated NSS.

d) The third-field digits refer to the actual UMTA project number assigned to each project (e.g. CA-06-0005, MD-11-0003, IT-09-0025, etc.). Place a decimal point after the project number, and following that enter a unique sequential numeric assigned to the particular report. Whenever possible, this latter number should correspond to the sixth-field digits in the report number of publications input to NTIS.

e) Except for the unique number following the third-field decimal point, TRIC index numbers are direct transpositions from UMTA project numbers. For example:

CA-06-0005 = 3-CAL-5

MD-11-0003 = 4-MD-3

IT-09-0025 = 2-INT-25

Thus if three separate reports were produced under the first project noted above, their respective TRIC index numbers would be:

3-CAL-5.1

3-CAL-5.2

3-CAL-5.3

SECTION V: Recommended Processing of UMTA Reports with Internal and External Personnel

[Instructions below are in sequence. "I" denotes an internal function. "E" denotes an external function.]

I Receive and store copies in TRIC; interface with project manager to obtain approval for distribution and transmittal to NTIS. Complete and file green card on reports in storage.

I Following approval by project manager, select best reproducible copy. Assign report number and index number. Forward to external abstractors.

E Complete necessary transmittal documentation. Draft TRIC abstract and assign keywords. Make necessary copies of BDS. Return transmittal package to TRIC.

I File BDS copies as required. Forward a copy of the report with standard form to OMB, as required. Transmit archive copy of report and additional copies (if any) to NTIS. Store additional copies.

NOTE: TRIC is responsible for reviewing transmittal documentation for accuracy. External abstractors should report to TRIC any instance of reports not prepared in conformance with DOT Order 1700.18A. It is the responsibility of TRIC, however, to effect any consequent changes in the report, and TRIC should review all reports prior to transmittal to ensure compliance with COSATI specifications.

I Receive accession notice card from NTIS with PB number and price attached. Report same to external abstractors.

E Prepare final-form TRIC abstract with PB number and price attached. Reproduce same per requirements (ie. one copy for each keyword assigned, one extra copy for TRIC files, and one copy for HRIS. Additional copies should be reproduced for reports not sent to NTIS.). Prepare red, white, and blue cards. Recommend appropriate entries (if any) to geographical index.

I File TRIC abstracts and cards. Enter recommended information (if any) in geographical index. Attach index number to one copy of the report and file it as required. Make complete distribution. File copy of accession notice card.

NOTE: For reports not accessioned at NTIS, make final-form copy of TRIC abstract immediately and proceed as otherwise.

APPENDIX I: DOT Order 1700.18A

Department of Transportation
Office of the Secretary
Washington, D.C.

ORDER

DOT 1700.18A

12-8-72

SUBJECT: PUBLICATION AND DISTRIBUTION OF DEPARTMENT OF TRANSPORTATION SCIENTIFIC AND TECHNICAL REPORTS

1. PURPOSE. This order establishes Department of Transportation (DOT) policy for the acquisition, format, and distribution of technical reports resulting from DOT-funded research and development (R&D) projects.

2. CANCELLATION. DOT 1700.18, FORMAT FOR SCIENTIFIC AND TECHNICAL REPORTS, 7-25-69

3. SCOPE. This order applies to interim and final technical reports prepared by and for the Office of the Secretary (OST) and all operating administrations. In addition, pursuant to delegation by the National Transportation Safety Board (NTSB) under Section 5(m) of the DOT Act, this order is applicable as a general guideline to NTSB. Excluded are staff studies, letter reports, technical or training manuals, catalogs, administrative or fiscal reports, or journal article manuscripts, preprints or reprints submitted as technical reports, and NTSB accident reports and studies. However, if such documents are distributed to the National Technical Information Service (NTIS), Springfield, Virginia, 22151, a Technical Report Documentation Page (DOT F 1700.7) must be a part of each copy.

4. REFERENCE. DOT document, DOT-TST-72-1, "Format and Distribution Requirements for DOT Scientific and Technical Reports" of September 1972, attached. (See paragraph 5 below.)

5. BACKGROUND. This order and the referenced DOT document are a product of the 1971 recommendations of the DOT Task Force on Technical Reports. The Task Force, convened to review the soundness and adequacy of order DOT 1700.18 (now cancelled). National interest dictates that all scientific and technical reports produced by the agencies of the United States Government shall be appropriately organized and available at a reasonable cost to the U.S. technological community. To this end, the Federal Council for Science and Technology (FCST) and its Committee on Scientific and Technical Information (COSATI) established certain policies concerning the payment of journal publication fees and the handling

DISTRIBUTION: All Secretarial Offices
All Operating Administrations
National Transportation Safety Board

OPI: Office of R&D Plans and Resources

of technical reports by the agencies of the U.S. Government. Additionally, COSATI issued "Guidelines to Format Standards for Scientific and Technical Reports Prepared by or for the Federal Government" and recommended their adoption by executive agencies as part of their agency-wide reporting specifications. Using the Guidelines as a base, the Assistant Secretary for Systems Development and Technology established a Department-wide standard and issued it as DOT document DOT-TST-72-1, "Format and Distribution Requirements for DOT Scientific and Technical Reports." This document is intended to aid in the interchange of scientific and technical data and in reducing the costs of preparing, storing, and retrieving scientific and technical documentation.

RESPONSIBILITIES.

a. The Assistant Secretary for Systems Development and Technology is responsible for the guidance and surveillance of the implementation of this order and for coordination of supplemental instructions issued by the operating elements. Additionally, he will be responsible for providing the central point of control for R&D reports prepared by and for the Assistant Secretary for Systems Development and Technology.

b. Other Secretarial Offices and operating elements are responsible for establishment of specific points of control for their technical reports, for the implementation of this order, and for establishment of internal procedures for review, acceptance, or non-acceptance of technical reports prepared by their organizations, contractors, grantees, and other recipients of R&D funds. Additionally, they are responsible for forwarding one copy of the mandatory Technical Report Documentation Page (DOT Form F 1700.7) to the Office of the Assistant Secretary for Systems Development and Technology (TST-1) for entry into the Transportation Research Activities Information System (TRAIS).

c. DOT contractors and grantees will be required, under R&D contracts, grants, and interagency agreements, to submit any required interim and final technical report in accordance with DOT-TST-72-1.

d. All DOT organizations that conduct or sponsor R&D are responsible for budgeting and paying for the costs of the subsequent dissemination of technical results. Journal publication fees may be paid only if all of the following criteria are met:

(1) The work was supported by DOT R&D contract, grant, or interagency agreement.

(2) The article is accepted by the DOT technical project monitor as a valid technical report, to be deposited at the NTIS and distributed by them to any requesting Government agency or its R&D contractor.

(3) The journal involved is not published for profit.

(4) The charges are levied impartially on all research papers published by the journal, whether by non-Government or Government authors.

(5) The journal article carries a notation acknowledging DOT sponsorship of the work.

7. DOCUMENT AVAILABILITY. Operating elements may provide copies to their potential contractors. All DOT personnel may obtain copies from the DOT Distribution Operations Unit, TAD 484.3. All others should order DOT-TST-72-1 from the National Technical Information Service, Springfield, Virginia, 22151.

8. IMPLEMENTING INSTRUCTIONS.

a. Operating administrations and the NTSB shall, within 60 days from the date of this order, prepare internal supplemental instructions for the expeditious implementation of this order. Internal instructions shall include processing procedures for review, acceptance, and non-acceptance of reports prepared by contractors, grantees, operating elements and other Governmental agencies. Special reporting instructions not covered in DOT-TST-72-1 or the supplemental instructions shall be included in the appropriate agreement documentation.

b. Operating elements' supplemental instructions shall be coordinated with the Office of the Assistant Secretary for Systems Development and Technology, R&D Information Officer, TST-25.

John A. Volpe
Secretary of Transportation

DOT-TST-72-1

FORMAT AND DISTRIBUTION REQUIREMENTS FOR DOT SCIENTIFIC AND TECHNICAL REPORTS

SEPTEMBER 1972

DEPARTMENT OF TRANSPORTATION
Office of Assistant Secretary for
Systems Development and Technology
Washington, D.C. 20590

FORMAT AND DISTRIBUTION REQUIREMENTS FOR DOT SCIENTIFIC AND TECHNICAL REPORTS

TABLE OF CONTENTS

c. U.S. Government Printing Office. Style Manual (latest edition). Available from the Superintendent of Documents, U.S. Government Printing Office, Washington, D.C. 20402. Price: $3.00 (1967 edition).

d. Department of Defense/Engineers Joint Council. Thesaurus of Engineering and Scientific Terms, 1967, Engineers Joint Council, 345 East 47th Street, N.Y., N.Y. 10017. Price: $19.50.

e. Other references shall be as specified by the sponsoring agency.

DEFINITIONS.

a. Sponsoring Agency. The organizational element having program responsibility for scientific or technical effort. A public body (state, city, commission, etc.) also may be a sponsoring agency in cooperation with a DOT operating element.

b. Performing Organization. The DOT element (either Headquarters, field or laboratory) contractor, grantee or recipient of DOT R&D funds reporting specific scientific or technical research findings resulting from investigations, demonstrations, tests or experiments.

c. Interim Report. An Interim Report is issued during the course of a project etc., or a major part thereof, to reflect completion of a specific phase of a project assignment, etc. This method of reporting also can be used where periodic report of progress is of vital interest to the transportation community at large. Interim reporting, for example, can be the communications medium for early reporting under a project etc., of considerable duration or relative complexity.

d. Final Report. A Final Report is issued at the completion of a project, or a major portion thereof, to signify the accomplishment and formal "close-out" of a project assignment, etc.

e. Transportation Research Activity Information Service (TRAIS). TRAIS is an R&D management information system in the Office of the Secretary of Transportation, which acquires, stores, and retrieves information on R&D plans, budgets, activities, and results of DOT R&D programs.

6. REQUIREMENTS. DOT sponsored scientific and technical reports shall conform to the requirements of DOT-TST-72-1, the references cited in (4) above, security regulations and further specifications of the sponsoring element.

7. LEGAL CONSIDERATIONS. The Government may be subject to liability for misuse of the literary or intellectual property (patents, trademarks, "proprietary information") of others. To ensure that technical reports can receive the widest possible dissemination, report writers and editors should observe the following guidelines:

a. Copyright. No copyrighted material may be incorporated in a report unless written permission of the copyright owner has been obtained. Prior use of copyrighted material in another Government publication does not necessarily constitute permission to use it in a DOT publication. Where permission has been obtained and the material is used in a report, it shall be identified by a statement substantially as follows:

> "Reprinted from (title of publication) by (name of author) by permission of (name of copyright owner). Year of first publication_____."

b. Courtesy requires that acknowledgment or credit be given (by footnote, bibliographic reference, or a statement in the text) for the use of the material contributed or assistance rendered by someone else though no copyright notice is involved.

c. Unpublished work may be protected under common law or equity even though there is no copyright notice. Problems relating to the protection given to unpublished work will be referred to the Office of the General Counsel.

d. Privately Owned Information. To avoid restriction on availability of reports, every effort should be made to avoid the use of proprietary information accepted by the Government for limited purposes. Such proprietary information will be used only if it is essential to the understanding of a report and only after approval by the Office of the General Counsel. Reports containing such proprietary information will bear a statement restricting availability and handling, as required (Paragraph 8b(9)).

c. U.S. Government

e. Data Use Restriction. In the event that the Contractor furnishes any information or data which the Contractor considers to be proprietary under the terms of the contract, the Contractor shall affix the following use restriction legend to such proprietary data, shall mark such data with the number of the prime contract, and subcontract, if applicable; and shall deliver such proprietary data directly to the Government. No other legend is authorized and the Government will thereafter treat the data in accordance with such legend.

"DATA USE RESTRICTION"

These data, furnished under U.S. Government Contract No._____, may be duplicated and used by the Government with the express limitations that the data may not be disclosed outside the Government, nor be used for purposes of manufacture, without prior permission of the contractor. These restrictions do not limit the Government's rights to use or disclose any data obtained from another source without restriction. This legend shall be marked on any reproduction of these data in whole or in part."

f. Trademarks. The term "trademark" includes any word name, symbol, device or any combination thereof, adopted and used by a manufacturer or merchant to identify his goods and distinguish them from those manufactured or sold by others. It is improper to use a "trademark" to identify goods not manufactured or sold by the owner of a trademark or his licensee. In general the use of trademarks is discouraged. Where feasible, goods should be identified by a type designation or a structural feature that distinguishes them from other goods.

g. Trade Names and Manufacturers' Names. Under Section 522 of Title 5, United States Code, as implemented by DOT Regulation, Part 7, Public Availability of Information, effective 4 July 1967, many factual reports, which once were not available to the public, may be obtained by anyone who wants them. Particularly to be avoided is the appearance of endorsing or favoring a commerical product, commodity, or service. Therefore, unless the report will not contain meaningful information without them, trade names or the names of manufacturers will not be given.

MARINA

MEMORANDUM OF UNDERSTANDING
BETWEEN
TSC AND UMTA

SUBJECT: Review, Approval, and Distribution of TSC Generated Technical Reports Resulting from UMTA PPA's

A. CRITERIA

1. The UMTA, as the sponsor, must review and approve for release any or all scientific and technical reports generated by TSC under PPA's in accordance with DOT Order 1700.18B.

2. Format and content of all technical reports will be as prescribed by DOT Order 1700.18B.

B. REVIEW AND APPROVAL

1. The review and approval cycle contained in DOT Order 1700.18B shall be strictly adhered to. If at the end of the required review and approval cycle (60 days) notification of approval or disapproval has not been received by TSC from the sponsoring organization, the sponsoring organization must indicate how much additional review time is required.

2. To preclude undue delay in the review and approval of technical reports generated for UMTA by TSC, the review of these reports by personnel outside of UMTA will be limited to the particular aspect of the report for which that person and/or agency has specific cognizance.

3. Waiver of approval authority shall be specified in the PPA.

4. The UMTA Transit Research Information Center (TRIC) will assign the UMTA report number.

C. DISTRIBUTION OF PUBLISHED REPORTS

1. The sponsoring office in UMTA, at the time it notifies TSC of report approval, will indicate the number of paper copies needed to satisfy the Sponsoring Office and TRIC requirements. If the number of paper copies are not specified, the TSC will automatically provide 55 paper copies of subject report to the sponsoring office.

TRISNET - status (Alex

(1) TAD audit unfriendly
TRISNET not institutionalized.
No reduction in TRISNET
User pay - not TST
TRISNET not a data bank (input-output)
Cooperative performance effort.
- Could delete TRIAS or block 10
- 10 block can be Project No

* Expand Order to cover other docum, non-Tech?
Dr. Trilling, TPI, socio-econ research / TST -
(1) Feels all rpts to be inv.

TPI Documents

D. NUMBERING OF REPORTS

Each technical report prepared for UMTA by TSC shall carry both an UMTA and TSC number. The UMTA report number will be assigned by the Transit Research Information Center (TRIC) during the review and approval cycle, and be displayed on the cover and documentation page. The TSC number will appear only in block 8 of the Technical Documentation Page (DOT Form F 1700.7).

E. EFFECTIVE DATE

This memorandum of Understanding is effective upon the date it is signed by the sponsoring agency.

/S/ Jan. 28, 1977

TSC James B. Cahalane
Director of Administration
Date

UMTA
McManus

13 116.1A / 1700.18B.

① > TSC Problem - (1) Decisions by TST
(2) " " TAD

TSC to have more visibility. TSC appears only on TRD page, no so. TSC wants deviation from printing & visibility, & 1700.18B.

① Identification of TSC responsible rpts.
(a) Logo
(B) Color band on covers.

② DOT insignia on cover
- Self cover (different color paper).

> John Nigro, ARD-54B/FAA
① - Photograph page - microfiche
Lithocoded paper. Recommn - photograph on Lithocoded paper.

CWstock, 120 weight used b FHWA - photos.
p.19.

② Metric conversion sheet in document
~~Conversion~~ Drop metric conversion - include in all CII's,
standard (metric)

③ Microfiche move

TST - Free microfiche copy - Contact with NTIS
100,000 For microfiche copy, FAA Library
TRIBNET Repositories

The use of trade names or manufacturers' names in a report will be specifically brought to the attention of the reviewing office before the report is approved. Such reports shall contain the following notice on the inside front cover (no border required):

> NOTICE
>
> The United States Government does not endorse products or manufacturers. Trade or manufacturers' names appear herein solely because they are considered essential to the object of this report.

8. FORMAT.

a. Order of Elements. When some or all of the following elements are appropriate for a report, they will be included and the standard order will be as follows:

	Front cover
	Inside front cover
Front matter	Technical report documentation page
	Preface
	Table of contents
	List of illustrations
	List of tables
	List of abbreviations and symbols
Body of report	Introduction
	Main text
	Conclusions
	Recommendations
Reference material	Appendixes
	Glossary of terms
	References
	Bibliography
	Index
	Back cover

GROUP I

Report No. CG-724104.004

DOT-TST-72-1
September 1972

GROUP II

Title

REMOTE SENSING OF OIL SLICKS

Subtitle (if any)

Author(s)

John R. Doe

DOT insignia

Date

SEPTEMBER 1972

Type of report

FINAL REPORT

Distribution statement

Document is available to the public through the National Technical Information Service, Springfield, Virginia 22151

GROUP III

DOT Operating element
DOT headquarters element and address

Prepared for

DEPARTMENT OF TRANSPORTATION
UNITED STATES COAST GUARD
Office of Research and Development
Washington, D.C. 20590

Figure 1. Sample Front Cover

b. Front Cover.

(1) Outside Front Cover. Either self covers (of the same paper as the text) or separate covers (of different paper than the text) are required for all reports except those furnished in manuscript form. Include on the cover the information shown in groupings plus special markings (such as security classification and distribution limitations) specified by the sponsoring agency. Recommended group related items are shown in Figure 1.

(2) Report Number. Each report shall carry a unique alphanumeric designation provided by the sponsoring element (for example, CG-714104.004; FAA-RD-72-1; or FHWA-PA-RD-72 for state-sponsored report in cooperation with DOT operating element). If none has been assigned, use an alphanumeric designation established by the performing organization (for example, TSC-SA-72-2, MIT-R-71-8737-1); or an alphanumeric designation derived from the contract or grant number (for example, FA71WA-8737-1).

(3) Title and Subtitle. Display the title prominently and make it indicate clearly and briefly the subject of the report. Set subtitle, if used, in smaller type or otherwise subordinate it to the main title. When a report is prepared in more than one volume, repeat the primary title and have subtitle identify that specific volume; for example, Volume I, Volume II.

(4) Author(s). Place the author's name on the front cover only if the report was written by him/her to describe specific or technical research findings resulting from investigation, tests, or experiments he/she conducted. The author's name shall be subordinated in appropriately smaller type than the title. Give the name(s) of the author(s) in conventional order (for example, John R. Doe, or if author prefers, J. Robert Doe).

(5) Performing Organization Name and Address. Regulations of the Joint Committee on Printing do not allow for the identification of the performing organization's name and address. This information will not be printed on the cover.

(6) DOT Insignia. Place the DOT insignia on all reports as shown in Figure 1. In cases where a public body (state, city, commission, university, etc.) is a sponsoring agency, the DOT insignia may be deleted and appropriate public body substitution made.

(7) Date. Each report shall carry a date. The sponsoring element may specify the basis for dating. If it does not, the author will provide a date and indicate the basis on which it was selected (for example, date of issue, date of approval, date of preparation, etc.).

(8) Type of Report and Period Covered. Indicate interim, final, etc., and if applicable, dates covered.

(9) Distribution Statement. Each DOT sponsoring element shall assign a distribution statement, which is placed on the front cover and printed on all copies. The statement that appears on the cover must also appear in Block 18 of the Technical Report Documentation Page. Use one of the following as appropriate:

(a) Document is available to the public through the National Technical Information Service, Springfield, Virginia 22151.

(b) Approved for U.S. Government only. This document is exempted from public availability because (fill in reason). Transmittal of this document outside the U.S. Government must have prior approval of the (fill in DOT sponsoring element).

(c) Approved for (fill in DOT sponsoring element) only. This document is exempted from public availability because (fill in reason). Transmittal of this document outside the (fill in sponsoring element) Department of Transportation must have prior approval of the (fill in responsible office).

(10) Sponsoring Agency's Name and Address. Give name, city, state, and zip code. When a public body (state, city, commission, university, etc.) is a sponsoring agency in cooperation with the DOT, grouping will reflect this cooperation, such as:

Prepared for
DEPARTMENT OF HIGHWAYS
Atlanta, GA 30334

in cooperation with
(DOT OPERATING ELEMENT,
Headquarters element, address)

(11) Inside Front Cover. Special notices, such as reproduction, safety precautions, sponsor's disclaimers, and statements of compliance with special regulations are placed on the inside front cover as required by the sponsoring element. Place the following notice on the inside front cover of all DOT reports (no border required).

> NOTICE
>
> This document is disseminated under the sponsorship of the Department of Transportation in the interest of information exchange. The United States Government assumes no liability for its contents or use thereof.

c. Front Matter.

(1) Technical Report Documentation Page. Include one completed Technical Report Documentation Page as the first right-hand page after the cover in each report. A model completed page is shown in Figure 2A, with instructions for completing the form given in Figure 2B. Attachment 1 is a reproducible blank form of the documentation page for the author's use. Adequate and accurate completion of this page will assist documentation of a report. This documentation page also may be distributed in lieu of copies of the published report. This form is available from the DOT Distribution Operations Unit, TAD 484.3, for DOT elements and from the Contracting Officers of the sponsoring elements for contractors and grantees.

Technical Report Documentation Page

1. Report No.	2. Government Accession No.	3. Recipient's Catalog No.
OST-ONA-71-1. V		

4. Title and Subtitle	5. Report Date
A STUDY OF THE MAGNITUDE OF TRANSPORTATION NOISE GENERATION AND POTENTIAL ABATEMENT Volume V - Train System Noise	November 1971
	6. Performing Organization Code
	8. Performing Organization Report No.
7. Author(s) Joseph A. Rock, C. Thomas Paine	
9. Performing Organization Name and Address Serendipity, Incorporated Eastern Operations Division Suite 701, 2001 Jefferson Davis Hwy. Arlington, Virginia 22202	10. Work Unit No. (TRAIS) 1224-611
	11. Contract or Grant No. DOT-OS-A9-018
12. Sponsoring Agency Name and Address Department of Transportation Office of the Secretary Office of Noise Abatement Washington, D.C. 20590	13. Type of Report and Period Covered Final Report
	14. Sponsoring Agency Code
15. Supplementary Notes	

16. Abstract

The noise from an individual vehicle is a function of the physical characteristics of the vehicle, the way in which the vehicle is operated and the construction characteristics of the vehicle's guideway, e.g., rail condition, roadbed supporting structure. Noise reduction at the source can be obtained by altering the vehicle and/or the guideway and by changing the way the vehicle is operated.

Analysis of contemporary transit vehicle noise indicates that the rank order of conventional rail vehicle noise sources is: (1) wheel and rail system, (2) propulsion system and (3) auxiliary equipment.

Noise levels alongside the right-of-way are a function of the vehicle type, its operation, and the configuration of the roadbed and surrounding areas.

For a given vehicle and guideway, the right-of-way configuration has the greatest impact on the sound levels received at a specific wayside location. Rail vehicle wayside noise levels can be reduced by interrupting the sound transmission paths between the vehicle and the receiver. To the extent that this is achieved, rail vehicle wayside noise levels can be reduced in a manner which is similar to that used for highway noise reduction.

17. Key Words	18. Distribution Statement
Noise, Transportation noise, Rail vehicle noise, Surface transportation, Mass transit.	Document is available to the public through the National Technical Information Service, Springfield, Virginia 22151

19. Security Classif. (of this report)	20. Security Classif. (of this page)	21. No. of Pages	22. Price
UNCLASSIFIED	UNCLASSIFIED	115	$3.00 PC $ .95 MF

Form DOT F 1700.7 (8-72) Reproduction of completed page authorized

FIGURE 2A. SAMPLE, COMPLETED TECHNICAL REPORT DOCUMENTATION PAGE

Make items 1, 4, 5, 7, 9, 12, and 13 agree with the corresponding information on the report cover. Use all capital letters for main title (item 4). Leave items 2, 6, and 14 blank. Complete the remaining items as follows:

3. Recipient's Catalog No. Reserve for use by report recipient.

8. Performing Organization Report No. Insert if performing organization wishes to assign this number.

10. Work Unit No. (TRAIS). Use the number code from the applicable research and technology resume which uniquely identifies the work unit in the Transportation Research Activity Information Service. For Highway Planning and Research (HP&R) Program reports, include the FCP Code assigned in the study.

11. Contract or Grant No. Insert the number of the contract or grant under which the report was prepared. For Highway Planning and Research (HP&R) Program reports, include also the State study number.

15. Supplementary Notes. Enter information not included elsewhere but useful, such as: Prepared in cooperation with...Translation of (or by)...Presented at conference of...To be published in...

16. Abstract. Include a brief (not to exceed 200 words) factual summary of the most significant information contained in the report. An abstract should state the purpose, methods, results, and conclusions of the work effort. For the purpose, include a statement of goals (objectives, aims). For methods, include experimental techniques or the means by which the results were obtained. Results (findings) are the most important part of the abstract and selection should be based on one, or several of the following: new and verified events, findings of permanent value, significant findings which contradict previous theories, or findings which the author knows are relevant to a practical problem. Conclusions should deal with the implications of the findings and how they tie in with studies in related fields. Do not repeat title or other items provided on this page. When a report consists of a number of volumes, include the title of each of the other volumes in each abstract.

17. Key Words. Select terms or short phrases that identify the principal subjects covered in the report, and are of sufficiently specific and precise to be used as index entries for cataloging. The sponsoring element may specify that the key words shall conform to standard terminology, such as that given in the Department of Defense/Engineers Joint Council Thesaurus of Engineering and Scientific Terms, or a Thesaurus of Terms established by the sponsoring element.

18. Distribution Statement. Enter one of the authorized statements (Paragraph 8b(9)) used to denote releasability to the public or a limitation on dissemination for reasons other than security of defense information. Refer questions on the statements of the sponsoring element.

19. Security Classification (of report). Note: Reports carrying a security classification will require additional markings giving security and downgrading information as specified by the sponsoring element.

20. Security Classification (of this page). Note: Because this page may be used in preparing announcements, bibliographies, and data banks, it should be unclassified, if possible. If a classification is required, identify the classified items on the page by an appropriate symbol.

21. No. of Pages. Insert the number of pages.

22. Price. Insert the price (paper copy and microfiche copy) set by the National Technical Information Service or the Government Printing Office, if known.

FIGURE 2B. INSTRUCTIONS FOR COMPLETING TECHNICAL REPORT DOCUMENTATION PAGE.

(2) Preface. Among possible uses, a preface may show the relation of the work reported on to associated efforts, give credit for the use of copyrighted material, and acknowledge significant assistance received.

(3) Table of Contents. In the table of contents (not suggested for a report of less than 10 pages), list principal headings as they appear in the report with the page numbers on which the headings occur. Do not list items from the front matter. Start the table of contents on a right-hand page.

(4) List of Illustrations. Furnish a list of illustrations only if it is considered essential. List figure number, legend, and page number of each illustration. Abbreviate lengthy legends.

(5) List of Tables. Furnish a list of tables only if it is considered essential. List table number, caption, and page number of each table. Abbreviate lengthy captions.

(6) List of Abbreviations and Symbols. Define symbols and abbreviations where first introduced in the text. When symbols and abbreviations are numerous, furnish a separate list with definitions.

d. Body of Report.

(1) General. The contents and organization of the body of a report shall be determined by the nature of the work. Start the first section on a right-hand page. This section usually provides background information and work objectives. Succeeding sections describe work procedures, apparatus involved, tests performed, results achieved, and related matters, as appropriate. The terminal sections usually present conclusions and recommendations.

(2) Headings. Headings shall stand out from the text with their relative importance apparent. Typical heading styles are illustrated in Figure 3.

METHODS ——— *First-order head*

Macroplankton ——— *Second-order head*

Third-order head

Sampling—The larger and more sparse macroplankton were sampled . . . . .

. . . . . .

METHODS ——— *First-order head*

Macroplankton ——— *Second-order head*

SAMPLING ——— *Third-order head*

The larger and more sparse macroplankton were sampled . . . . . .

. . . . . .

FIGURE 3. TWO SAMPLES OF HEADINGS. Top example shows standard typewriter headings; bottom example shows headings prepared on composing equipment.

(3) Numbering System. Number headings and paragraphs only when the numbers are needed for clarity.

e. Reference Material.

(1) Appendixes. Start each appendix on a right-hand page. When one or more appendixes are used, designate them Appendix A, Appendix B, etc. Each appendix shall be cited.

(2) Glossary of Terms. Define unusual technical terms where first introduced in the text. When many such terms are used, list them in alphabetical order with definitions in a glossary.

(3) References and Bibliography. Include complete identification of reference on bottom of page where first cited to aid in reading from microform. When references are numerous, they should be repeated in a reference list in the back of a report under "References." Arrange bibliographic entries not cited in the text but furnished as supplementary information under "Bibliography." Present entries in a uniform style which includes authors, titles, sources, identifying numbers, and dates.

(4) Index. When an index is considered essential, make it as complete as the nature of the report and its probable usage requires.

f. Illustrations.

(1) General. Treat illustrations consistently throughout a report. Prepare them so that details and callouts (labels) will be clearly legible after final reproduction. Crop or mask photographs to eliminate insignificant detail. Do not add border frames to outline illustrations or use background tones in line drawings unless they contribute substantially to clarity. For reproducible copy, submit only clean tone or line art and only original photographs (or other types of tone art) rather than screened (halftone) reproductions.

(2) Placement. Locate illustrations near the first text reference made to them except in special situations, such as when a report contains only a few text pages and many illustrations. In such cases, place the illustrations in numerical sequence in the back of the report. It is preferable that illustrations be placed so that they may be viewed without turning the page sideways. If an illustration has to be placed sideways on a page, orient it so that the top of the illustration is at the left side of the page.

(3) Callouts (Labels). So far as practicable, place callouts horizontally, unboxed, and near the item called out, as shown in Figure 4. Make callouts consistent in size and typeface throughout a report. Use a typewriter or type size. Strive for high contrast and readability.

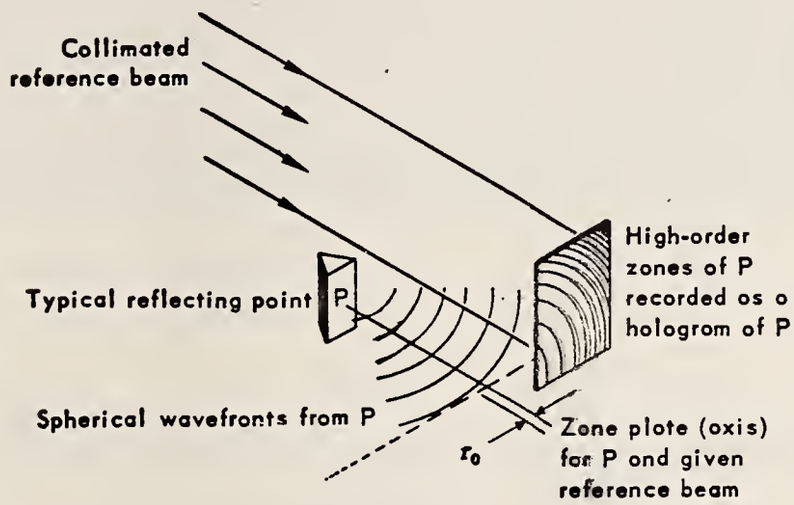

FIGURE 4. SAMPLE PLACEMENT OF CALLOUTS (LABELS)

(4) Color. Color must not be used unless specifically authorized by the sponsoring agency. Often screens, crosshatching, reverses, dots, or similar techniques can be used as effective substitutes for color (Figure 5). Refer to Government Printing and Binding Regulation, paragraphs 17-1, 17-2, and 17-3 for general provisions concerning color printing.

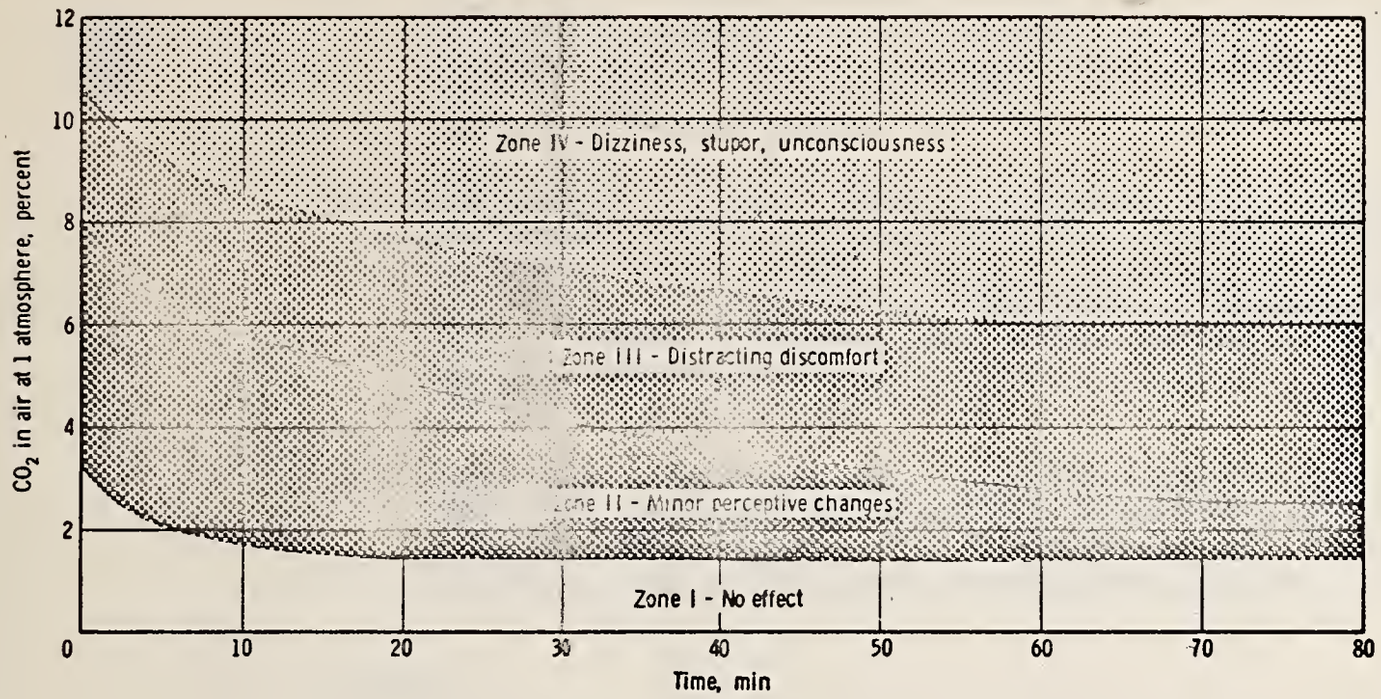

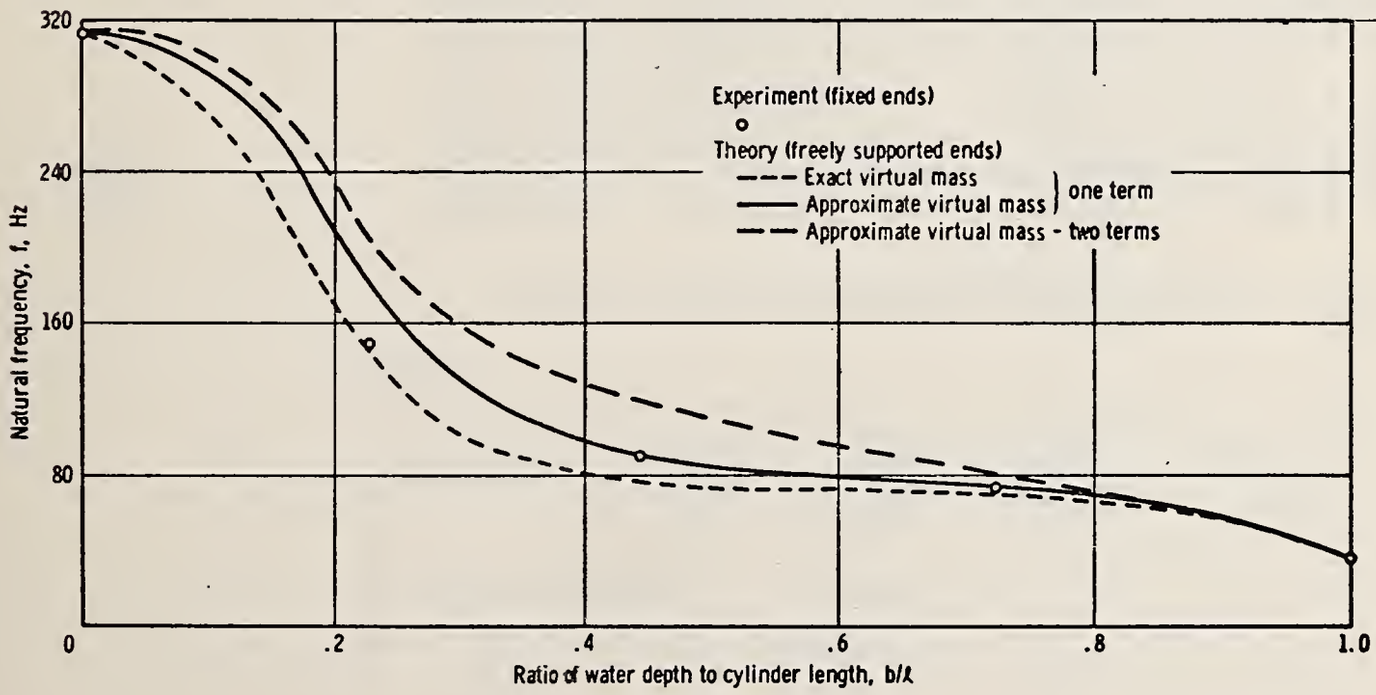

FIGURE 5. SAMPLE, SCREENING (TOP) AND CODING (BOTTOM) USED AS SUBSTITUTES FOR COLOR.

(5) Fold-ins. Wherever possible, avoid the use of oversize illustrations that must be folded. Often a large illustration can be divided to appear on facing pages. Make fold-ins or gate folds begin on a right-hand page.

(6) Numbering. Number illustrations to which reference is made in the text consecutively in Arabic numerals, preceded by the word "Figure," for example, Figure 1, Figure 2, or Figure 1-1, Figure 1-2, Figure 2-1, etc. Number illustrations within appendixes in a manner consistent with the appendix letter, such as Figure A-1, Figure B-2, etc.

(7) Legends. Accompany each illustration, except for self-explanatory sketches, by a descriptive legend. The legend is ordinarily placed under the illustration and follows the figure number.

g. Tables.

(1) General. Tables should be as simple as possible so that the reader can easily grasp the meaning of the data. Use letters and numbers in tables that will be at least 6 point or larger in the final reproduced report. Prepare printout sheets from which electronically tabulated data are directly reproduced so that letters and numbers are sharp and unbroken. A sample table is shown in Figure 6.

TABLE 1. – SHORT-TIME XXXXXXXXXXXXXXXXXXXXXXX ← *Caption*

Boxhead

Temperature, K	Specimen type (a)	Ultimate tensile strength, N/m^2	Elongation between buttonheads, cm	Reduction of area, percent
Footnote reference		Tungsten		
1700	1	2200×10^3	1.57	95
1900	1	1312	1.60	75
2060	1	987	.69	36
2260	1	674	.51	25

[a]Recrystallized at 2370 K for 1/2 hour in vacuum. ← *Footnote*

FIGURE 6. SAMPLE TYPICAL TABLE LAYOUT. For more complete information on tables, see the Government Printing Office Style Manual.

(2) Placement. Locate tables near the first text reference made to them, except in special situations, such as when a report contains only a few text pages and many tables. In such cases, place the tables in numerical sequence in the back of the report. It is preferable that tables be placed so that they may be viewed without turning the page sideways. If a table has to be located sideways on a page, orient it so that the top of the table is at the left side of the page

(3) Headings and Columns. Give applicable unit of measure or degree in the column headings of tables. Do not repeat in the columns. When tables continue on two or more pages, note the continuation and repeat the column headings and rules on each page.

(4) Numbering. Number tables to which reference is made in the text consecutively in Arabic numerals, preceded by the word "Table," for example, Table 1, Table 2, or Table 1-1, Table 1-2, Table 2-1, etc. Number tables within appendixes in a manner consistent with the Appendix letter, such as "Table A-1, Table B-2", etc.

(5) Captions. Give each table, except short ones which run in with the text, a descriptive caption following the table number. Place caption above the table.

h. Equations.

(1) General. Prepare mathematical matter with extreme care. Use machine or transfer-type composition when available. Identify symbols after first use to aid in reading from microform or in a separate list. Make opening and closing parentheses, brackets, and braces the same height as the tallest expression they enclose. Separate numerator from the denominator with a line as long as the longer of the two. Center both numerator and denominator on the line.

(2) Placement. Indent or center a displayed equation in the line immediately following the first text reference made to it. Break equations before an equal, plus, or multiplication sign. Align a group of separate but related equations by the equal signs and indent or center the group as a whole. Short equations not part of a series may be placed in the text rather than displayed.

(3) Numbering. Number equations which are part of a series or which are referred to in the text consecutively in Arabic numerals; for example, (1), (2), or (1-1), (1-2), (2-1), etc. Enclose each number in parentheses at the right margin on the last line of the equation numbers. Number equations within appendixes in a manner consistent with the appendix letter, such as (A-1), (B-2), etc.

i. Distribution. Do not include a distribution list in a published DOT report.

(1) Availability of Published Reports. Information resulting from DOT-sponsored R&D must receive proper dissemination throughout the DOT and the transportation community. Each sponsoring agency is to announce its published reports and their availability from the National Technical Information Service.

(2) Distribution of Published Reports. DOT sponsoring elements will establish a distribution list for each published report. As a minimum requirement such list shall specify 6 copies for the DOT Headquarters Library (TAD-491), and provide for adequate distribution within the DOT sponsoring agency and appropriate Departmental offices (for example, Transportation Systems Center, Cambridge, Massachusetts). When the report is to be made available to the public, the list shall specify at least 12 copies for the National Technical Information Service, Springfield, Virginia 22151.

(3) Distribution of Technical Report Documentation Pages. When the information needs of an addressee can be satisfied by copies of the completed Technical Report Documentation Page, consideration should be given to furnishing documentation pages in lieu of copies of published reports. DOT sponsoring agencies are to ensure that one copy of a completed documentation page of each accepted report, whether freely dissiminated or restricted from public distribution is forwarded to the Office of R&D Plans and Resources, TST-25.

j. Production Composition.

(a) Type Size. Use a minimum 8-point type size or typewriter for the main text of the report.

(b) Typed Copy. Use black ribbon on opaque white paper to type reproducible copy. Camera ready copy shall be typed on one side only.

(c) Line Spacing. Use single or 1½ spacing for reports prepared by typewriter for reproduction, except when extra spacing between lines is necessary to assure clarity of run-in equations, symbols, etc. Use 1½ or double-spacing for manuscripts.

(d) Margins. Use margins of at least 1 inch on all sides of text pages.

(e) Page Numbering. Wherever practicable, number all pages throughout a report consecutively at the bottom center with Arabic numerals. In special cases, number by section or chapter (1-1, 1-2, 2-1, etc.). Odd-numbered pages are right-hand pages and even-numbered pages are left-hand pages.

k. Limitation on Printing. Contractors shall not become prime sources of printing for agencies unless so authorized by the Joint Committee on Printing. See paragraphs 37 and 38, Government Printing and Binding Regulations (listed in paragraph entitled "References"). Duplicating (not printing) shall conform to paragraph 2 of these Regulations. Printing shall not be a preplanned contractual requirement. Contractors shall furnish one reproducible copy of the final approved report within the time specified in the contract. Only clean tone or line art and original photographs and text suitable for camera copy for offset printing shall be submitted.

l. Workmanship. Filled-in or broken letters, illegible text or illustrations (including lettering), or similar imperfections are not acceptable. Only reproduced reports that will be legible in microform are acceptable.

m. Cover Size, Stock, and Ink. Reproduced reports may have separage covers or self covers cut to page size. Use 110-pound index (Government Specification JCP K10), 50-pound antique (JCP L20), 44-pound white ledger (JCP J10), or similar commercial weight paper for separate covers. Use black ink for self covers. Do not use covers with windows.

n. Page Size, Stock, and Ink. Reproduced reports shall be approximately 8 by 10½ inches or 8½ by 11 inches in size. Use black ink on opaque white paper. Use both sides of of the sheet to the maximum extent practicable.

o. Binding. Use side-stitching, saddle-stitching, or glue-back binding. Other types of binding require the approval of the sponsoring agency.

p. Decorative Features and Advertising. Do not use advertising display on pages.

9. REVIEW AND ACCEPTANCE. To ensure that DOT technical reports conform to the established standards of format and distribution and to protect the Government interest against possible litigation, all reports shall be reviewed and accepted as follows:

a. Review. Types of reports to be reviewed and criteria for the review will be according to the provisions of the individual work agreements (contract, project plan agreement, grant, etc.). Within 30 days after completion of the technical work related to a contract, grant, or project phase, the performing organization shall submit advance draft copies of the report with a letter of transmittal to the concerned element of the DOT sponsoring organization for review and approval. Such review is for the purpose of assuring that the report is in compliance with the project assignment or contract and in conformity with the format guidelines established by this order.

b. Approval. Approval or critique of reports prepared by DOT elements will be provided performing organizations in writing by the DOT sponsoring organization concerned, within 60 days of receipt of draft copies. For contractor prepared reports, approval will be provided in writing by the contracting officer concerned.

c. Resolution of Conflicts. In the event of a conflict which cannot be resolved between the performer and the sponsoring organization, the matter will be referred to TST-42 for resolution.

d. Waiver of Approval Authority. In cases where the sponsoring organization waives its review and approval authority, such waiver shall be specified in the agreement documentation.

Technical Report Documentation Page

1. Report No.	2. Government Accession No.	3. Recipient's Catalog No.
4. Title and Subtitle		5. Report Date
		6. Performing Organization Code
7. Author(s)		8. Performing Organization Report No.
9. Performing Organization Name and Address		10. Work Unit No. (TRAIS)
		11. Contract or Grant No.
12. Sponsoring Agency Name and Address		13. Type of Report and Period Covered
		14. Sponsoring Agency Code
15. Supplementary Notes		
16. Abstract		
17. Key Words	18. Distribution Statement	

19. Security Classif. (of this report)	20. Security Classif. (of this page)	21. No. of Pages	22. Price

Form DOT F 1700.7 (8–72) Reproduction of completed page authorized

☆ U. S. GOVERNMENT PRINTING OFFICE : 1973 725-504/328

APPENDIX II: NTIS Contributor's Guide

Contributor's Check List

1. Is the title meaningful?
2. Is the wording of the title identical wherever it appears?
3. Will the document be sent to NTIS immediately upon release?
4. Is there a date of publication on the report?
5. Are all the pages reproducible?
6. If some lines of type are faded and not reproducible, can they be made legible by filling in with a sharp pencil?
7. Are all pages numbered sequentially or within chapters with chapter prefix? Have you numbered those pages with maps, charts, etc?
8. If the report carries a volume or part number of 2 or higher are previous volumes or parts available from NTIS? If available elsewhere give full information on availability.
9. Do broadmeasure pages read from the right?
10. If color has been used in illustrations, will they be understandable when reproduced in black and white? NTIS cannot reproduce color.
11. Are there copyright or other restrictions anywhere in the report? If so, be sure to send written authorization for NTIS to reproduce and sell to the public.
12. Is the use of the foldouts avoided wherever possible?
13. Is the document to include computer print-out sheets? If so, ask NTIS well in advance, for special format specifications.
14. Is a completed Bibliographic Data Sheet part of the document and is an Accession Notice Card attached?

NTIS—11-72-L-101

Acquisition Office
National Technical Information Service
U.S. DEPARTMENT OF COMMERCE
Springfield, Virginia 22151
Telephone (703) 321-8517

NTIS Contributor's Guide

The National Technical Information Service welcomes additions to its collection. But, potential contributions must be considered within the agency's Federal obligations, overall objectives and statutory limitations. Therefore, prospective contributors should inquire whether or not their documents may be considered by NTIS. That may be done by writing or telephoning.

Personal assistance in meeting the format requirements, for acceptable contributions, and technical counseling is available from the Acquisition Office.

A useful aid, "Guidelines to Format Standards for Scientific and Technical Reports Prepared by or for the Federal Government", may be ordered from NTIS (PB-180-600; $3).

NTIS requirements for information on computer printout sheets are not included in this folder but are available on request from the Acquisition Office. Inquire before you program the format.

National Technical Information Service
U.S. DEPARTMENT OF COMMERCE
Springfield, Virginia 22151
Telephone (703) 321-8517

Requirements for Documents

1. Typed or printed in black on standard-size white paper. If typed, single spacing is preferable but 1½ is acceptable.
2. Print a unique alpha-numeric number of your choice on the cover of each separately bound document, enabling computer retrieval (see "Guidelines" aid on previous page).
3. Number each page.
4. Include a Bibliographic Data Sheet, available from NTIS as Form 35, as the first page.
5. Staple one or more NTIS Accession Notice Cards, available from NTIS as Form 79, to the cover of one copy of each title. These cards will be returned to you and other addressees, bearing the NTIS order number and price.
6. State in a letter to the NTIS Acquisition Office that you want NTIS to announce and sell your documents, and that there are no copyright or other restrictions on their distribution.
7. If possible, provide 25 copies of each document. You may send fewer copies but it is vital to the successful distribution and use of your material that you provide at least one clean, clear, reproducible copy.

Requirements for Tapes and Cards

The following standards apply to each title submitted.

1. Attach a completed Bibliographic Data Sheet, available from NTIS as Form 35. The abstract section should include such information as the original use of the file, time span of the data, typical uses for the file, and a specific source to ask for detailed technical information if necessary.
2. Attach record layouts, which must be complete and Xerox reproducible, with backup explanations of character sets, special codes, format conventions, blocking factors, etc. Label records and other sentinel information (tape marks, record marks, end-of-file) must be defined.
3. If the magnetic tape file is periodically revised new tape records must be made available to NTIS as revisions occur, so that the file may be sold on a continuing subscription basis. Revision schedules should be included with the original submissions.

Magnetic Tape Physical Structure Specifications:

1. IBM - compatible tape reel in either 2400-foot or 600-foot size.
2. Recording may be in either 7-track, 556 characters per inch, odd or even parity or 9-track, 800 characters per inch, odd parity only. A reflective spot must precede the first record, and an end-of-file sentinel must follow the last record. A 2400-foot reel must contain not more than 2200-feet of recorded data and a 600-foot reel must contain not more than 500 feet of recorded data. Physical record (block) size must not exceed 2048 characters.
3. External labels must be affixed to tape reel containers, bearing the following information.
   The unique alphanumeric report number.
   The date of the file.
   The density of the file, e.g. 556.
   Reel number, e.g. 1 of 1 or 1 of 4, etc.
   Title or abbreviated title of the file.

APPENDIX III: OMB Transmittal Documentation

UNITED STATES GOVERNMENT

Memorandum

DEPARTMENT OF TRANSPORTATION

URBAN MASS TRANSPORTATION ADMINISTRATION

DATE:

In reply refer to: ~~UPD-61~~ UTM-21

SUBJECT: University Research Reports (final)

FROM : ~~David Lee~~ Whoever, Transit Research Information ~~Center~~

TO : Economic Science and Technology Division
Office of Management and Budget
New Executive Office Building
17th and Pennsylvania Ave., N.W.
Room 8005
Washington, D.C. 20503
Attn.: Mr. Fred Meister

In accordance with your requirements concerning University Research and Training Reports (final), I am enclosing the report (s) for UMTA project:

UNITED STATES GOVERNMENT

Memorandum

DEPARTMENT OF TRANSPORTATION
URBAN MASS TRANSPORTATION ADMINISTRATION

DATE:

In reply refer to:

SUBJECT: Technical Study Reports (Final)

FROM : ~~David Lee, URD-61~~ Whoem UM-21

TO : Economic Science and Technology Division
Office of Management and Budget
Attention: Mr. Fred Meister

In accordance with your requirement concerning Technical Study Reports (final) conducted in SMSA's with population of 750,000 or greater, I am enclosing the final report for UMTA project:

APPENDIX IV: NTIS Transmittal Documentation

1. Form DOT F 1700.7
2. Form NTIS-35
3. Form NTIS-79
4. Form NBS-815

Technical Report Documentation Page

1. Report No.	2. Government Accession No.	3. Recipient's Catalog No.
4. Title and Subtitle		5. Report Date
		6. Performing Organization Code
7. Author(s)		8. Performing Organization Report No.
9. Performing Organization Name and Address		10. Work Unit No. (TRAIS)
		11. Contract or Grant No.
12. Sponsoring Agency Name and Address		13. Type of Report and Period Covered
		14. Sponsoring Agency Code
15. Supplementary Notes		
16. Abstract		
17. Key Words	18. Distribution Statement	

19. Security Classif. (of this report)	20. Security Classif. (of this page)	21. No. of Pages	22. Price

Form DOT F 1700.7 (8-72) Reproduction of completed page authorized

BIBLIOGRAPHIC DATA SHEET	1. Report No.	2.	3. Recipient's Accession No.
4. Title and Subtitle			5. Report Date
			6.
7. Author(s)			8. Performing Organization Rept. No.
9. Performing Organization Name and Address			10. Project/Task/Work Unit No.
			11. Contract/Grant No.
12. Sponsoring Organization Name and Address			13. Type of Report & Period Covered
			14.
15. Supplementary Notes			
16. Abstracts			
17. Key Words and Document Analysis. 17a. Descriptors			
17b. Identifiers/Open-Ended Terms			
17c. COSATI Field/Group			
18. Availability Statement		19. Security Class (This Report) UNCLASSIFIED	21. No. of Pages
		20. Security Class (This Page UNCLASSIFIED	22. Price

No longer used except
is 1700.7 is unavailable &
then only as a substitute —
this should not happen

U.S. DEPARTMENT OF COMMERCE
National Technical Information Service
Springfield, Va. 22151

OFFICIAL BUSINESS

Penalty for Private Use, $300

POSTAGE AND FEES PAID
U.S. DEPARTMENT OF COMMERCE

1. ACCESSION NO.	2. DATE SUBMITTED Normally allow 3 weeks for preparation of shelf stock	U.S. DEPARTMENT OF COMMERCE NATIONAL TECHNICAL INFORMATION SERVICE **ACCESSION NOTICE**
3. REPORT IDENTIFYING INFORMATION *One Title Per Card*		CONTRIBUTOR: 1. Put your mailing address on reverse side. 2. Fill in 2,3,4,5,6, and 9. 3. Staple card to front cover of top document and mail to Input Section, NTIS 4. If possible, submit 25 copies to permit immediate filling of orders and use of prestocking formula. NTIS: 1. Fill in boxes 1 and 7. 2. Return to Contributor.
4. SOURCE CODE *If known*	5. PROCESS CODE *If known*	6. IF IMMEDIATE PRESS RELEASE PLANNED ENTER TELEPHONE NO. OF A CONTACT
7. PAPER COPY PRICE $ ~~$3.00~~	8. MICROFICHE PRICE ~~$0.95~~ $1.45	9. NO. COPIES SUBMITTED

FORM NTIS-79
(12-70)

U.S. DEPARTMENT OF COMMERCE
National Bureau of Standards
CLEARINGHOUSE
FOR FEDERAL SCIENTIFIC AND TECHNICAL INFORMATION
SPRINGFIELD, VIRGINIA 22151

LAST-COPY TRANSMITTAL

Please attach a copy of this transmittal letter* when you are submitting your last library copy to the Clearinghouse for accessioning. A full-size reproduction will be sent you free of charge.

- 0 -

I am submitting our last copy to facilitate the best possible reproduction for the public.

_____ _____
Name Position

Please mail free reproduction to: Date_____

_____

_____

_____

_____

CLEARINGHOUSE PROCESSING RECORD Date received_____

Accession #_____ Date due INPUT_____

	DATE	INITIAL WHEN COMPLETED
MICROFICHED	_____	_____
XEROXED	_____	_____
REPRODUCTION RETURNED TO INPUT	_____	_____
REPRODUCTION MAILED TO CONTRIBUTOR	_____	_____

*Additional copies may be obtained from Input Section, Clearinghouse, 5285 Port Royal Road, Springfield, Virginia 22151. Telephone 703-321-8517

Form NBS-815 PLEASE STAPLE BOTTOM ONLY
(1-70)
Previous editions obsolete

APPENDIX V: Sample of Processed Documentation

1. Cover of typical university research report
2. OMB Transmittal Form
3. Completed NTIS-35 Form
4. Completed NTIS-79 Form
5. TRIC Abstract
6. Blue and White Index Cards
7. Red Index Cards (for Individual and Organizational Authors)
8. Geographical Index Entry

AN ANALYSIS OF THE 1968 RAPID TRANSIT VOTE IN LOS ANGELES

by

Brian Stipak

Department of Political Science
University of California, Los Angeles

October, 1972

UNITED STATES GOVERNMENT

Memorandum

DEPARTMENT OF TRANSPORTATION
URBAN MASS TRANSPORTATION ADMINISTRATION

DATE: January 23, 1973

In reply refer to: ~~URD-61~~ UTM-21

SUBJECT: University Research Reports (final)

FROM : ~~David Lee~~, Transit Research Information Center

TO : Economic Science and Technology Division
Office of Management and Budget
New Executive Office Building
17th and Pennsylvania Ave., N.W.
Room 8005
Washington, D.C. 20503
Attn.: Mr. Fred Meister

In accordance with your requirements concerning University Research and Training Reports (final), I am enclosing the report (s) for UMTA project:

CA-11-0007 (University of California at Los Angeles)

BIBLIOGRAPHIC DATA SHEET	1. Report No. UMTA-CA-11-0007-72-2	2.	3. Recipient's Accession No. PB-214-252

4. Title and Subtitle AN ANALYSIS OF THE 1968 RAPID TRANSIT VOTE IN LOS ANGELES	5. Report Date October, 1972 6.
7. Author(s) Brian Stipak	8. Performing Organization Rept. No.
9. Performing Organization Name and Address School of Architecture and Urban Planning University of California at Los Angeles Los Angeles, Calif. 90024	10. Project/Task/Work Unit No. CA-11-0007 11. Contract/Grant No. DOT-UT-425
12. Sponsoring Organization Name and Address Urban Mass Transportation Administration U.S. Department of Transportation 400 Seventh St., S.W. Washington, D.C. 20590	13. Type of Report & Period Covered Research, 1971-72 14.

15. Supplementary Notes

16. Abstracts A multiple regression analysis was performed to test the correlation between several socioeconomic variables and the 1968 rapid transit bond issue vote in Los Angeles. Results of the referendum to fund construction of the Southern California Rapid Transit District system were found to be strongly influenced by proximity of voters to the proposed rail line, income level, and ethnicity. Other variables tested include population density, age, paftisanship, and election turnout, but these factors were found to have exerted only a negligible effect. The author concludes that commonly accepted explanations of bond issue failures in general, and transit proposals in particular, underestimate the quality of the electoral decision. Policy implications of these findings for future transit proposals are described. The report recommends that such referenda should more explicitly incorporate the preferences of middle-income voters and be part of a comprehensive regional transportation plan.

17. Key Words and Document Analysis. 17a. Descriptors

Urban Transportation
Rapid Transit Railways
Political Science
Elections
Los Angeles, California

17b. Identifiers/Open-Ended Terms

Transportation Bond Issues
Bond Issue Elections
Southern California Rapid Transit District
Multiple Regression Analysis
Proximity
Electoral Decision-Making
Referenda
Mass Transit Voting
Voters
Ethnicity

17c. COSATI Field/Group 5D, 5K, 13F, 15E

18. Availability Statement	19. Security Class (This Report)	21. No. of Pages
Releasable to the Public. Available from: NTIS, Springfield, Va. 22151	UNCLASSIFIED	28
	20. Security Class (This Page) UNCLASSIFIED	22. Price $3.00

FORM NTIS-35 (REV. 3-72) USCOMM-DC 14952-P72

U.S. DEPARTMENT OF COMMERCE
National Technical Information Service
Springfield, Va. 22151

OFFICIAL BUSINESS

Penalty for Private Use, $300

POSTAGE AND FEES PAID
U.S. DEPARTMENT OF COMMERCE

Urban Mass Transportation Administration
U.S. Department of Transportation
400 Seventh St., S.W.
Washington, D.C. 20590

ATTENTION: David Lee, URD-61

1. ACCESSION NO.	2. DATE SUBMITTED
PB-214-252	January 23, 1973 Normally, allow 3 weeks for preparation of shelf stock

3. REPORT IDENTIFYING INFORMATION *One Title Per Card*

UMTA-CA-11-0007-72-2

AN ANALYSIS OF THE 1968 RAPID TRANSIT VOTE IN LOS ANGELES

4. SOURCE CODE *If known*	5. PROCESS CODE *If known*	6. IF IMMEDIATE PRESS RELEASE PLANNED ENTER TELEPHONE NO. OF A CONTACT

7. PAPER COPY PRICE		8. MICROFICHE PRICE	9. NO. COPIES SUBMITTED
$	$3.00	$0.95	5

U.S. DEPARTMENT OF COMMERCE
NATIONAL TECHNICAL
INFORMATION SERVICE

ACCESSION NOTICE

CONTRIBUTOR:

1. Put your mailing address on reverse side.
2. Fill in 2,3,4,5,6, and 9.
3. Staple card to front cover of top document and mail to Input Section, NTIS
4. If possible, submit 25 copies to permit immediate filling of orders and use of prestocking formula.

NTIS:

1. Fill in boxes 1 and 7.
2. Return to Contributor.

FORM NTIS-79
(12-70)

Title: "An Analysis of the 1968 Rapid Transit Vote in Los Angeles"

Author: Brian Stipak (University of California at Los Angeles, School of Architecture and Urban Planning)

Date: October, 1972 Project No. CA-11-0007

Keywords:
1. Government, urban
2. Demography
3. Community Response
4. Rail, systems planning and design
5. Race
6. Quantitative Analysis
7. Ridership, profiles
8. Surveys

Abstract: In November, 1968, Los Angeles area voters defeated Proposition A, a proposal to fund construction of the Southern California Rapid Transit District (SCRTD) system. This paper reports the results of a multiple regression analysis performed to test the correlation between several socioeconomic variables and the bond issue referendum vote.

Census data were collected at the tract level and combined with election returns by precinct. In describing the SCRTD referendum, attention is given to three influential variables. Distance from the nearest proposed transit station was found to correlate inversely with favorable voting patterns. Sixty-eight percent of the units located less than three miles from the proposed system voted more than 45% in favor; conversely, 79% of all units located more than three miles from a transit station voted below 45% in favor. In addition, the author found that the mean favorable vote declined directly with distance, although the cumulative impact of this variable tended to diminish with added increments.

The analysis also revealed a moderate negative association between voting for Proposition A and median tract income. This relationship was shown to be non-unidirectional, indicating that support for rapid transit was stronger in high and low-income areas. A third variable studied was ethnicity. The data indicate that support was stronger among blacks, persons with Spanish surnames, and Orientals than among whites.

Other factors -- including age, population density, partisanship, and voter turnout -- produced problems of multicollinearity and were not strongly associated with the referendum vote. The author also compared voting on Proposition A with the results of other referendum items on the 1968 ballot to determine whether the SCRTD defeat was attributable to a "mood of the electorate." The findings, however, indicate that voter shifts occurred on the various proposals, thus suggesting that issue distinctions were drawn by voters.

A multiple regression technique was employed to measure the combined effects of distance, income, and ethnicity; the final equation was found to explain 57% of the variance in the election results, a statistically significant product. The author concludes that commonly accepted explanations of bond issue failures in general, and transit proposals in particular, underestimate the quality of the electoral decision. The report recommends that such referenda in the future should more explicitly incorporate the preferences of middle-income voters and be a part of a comprehensive regional transportation plan.

NTIS Order #: PB-214-252

PC $3.00; MF 95¢

Title: "AN ANALYSIS OF THE 1968 RAPID TRANSIT VOTE IN LOS ANGELES"

Author: Brian Stipak (University of California at Los Angeles, School of Architecture and Urban Planning)

Date: October, 1972

Project No. CA-11-0007 Index No. 4-CAL-7.6

NTIS Order #: PB-213-252

Title: "AN ANALYSIS OF THE 1968 RAPID TRANSIT VOTE IN LOS ANGELES"

Author: Brian Stipak (University of California at Los Angeles, School of Architecture and Urban Planning)

Date: October, 1972

Project No. CA-11-0007 Index No. 4-CAL-7.6

Author: BRIAN STIPAK (University of California at Los Angeles, School of Architecture and Urban Planning)

Title: "An Analysis of the 1968 Rapid Transit Vote in Los Angeles"

Date: October, 1972

Project No. CA-11-0007 Index No. 4-CAL-7.6

Author: UNIVERSITY OF CALIFORNIA AT LOS ANGELES, SCHOOL OF ARCHITECTURE AND URBAN PLANNING (Brian Stipak)

Title: "An Analysis of the 1968 Rapid Transit Vote in Los Angeles"

Date: October, 1972

Project No. CA-11-0007 Index No. 4-CAL-7.6

CALIFORNIA - LOS ANGELES

Poverty-Employment Transit 1-CAL-9; 1-CAL-12

21-City Project 1-DC-6.1

SCRTD Planning 2-CAL-2

TACV in 2-CAL-10

Elderly Fare (Case) 3-00-97.1

Urban Growth Model 4-00-4.1

Commuting Factors (Case) 4-00-19.1

Effect of Aircraft Noise 4-DC-3.12

Century City Traffic Planning 4-CAL-7.4

Trns. Selection Methodology (Case) 4-CAL-9

Rapid Transit Experience (Case) 2-INT-11; (1968 vote) 4-CAL-7.6

DOT-TST-75-97

PB 245400

STANDARDS FOR THE PREPARATION AND PUBLICATION OF DOT SCIENTIFIC AND TECHNICAL REPORTS

Appendix to Order DOT 1700.18B, "Acquisition, Publication and Dissemination of DOT Scientific and Technical Reports."

May 1975

R & D Management Report

Document is available to the U.S. public through the National Technical Information Service, Springfield, Virginia 22161.

U.S. DEPARTMENT OF TRANSPORTATION
Office of Assistant Secretary for
Systems Development and Technology
Washington, D. C. 20590

Technical Report Documentation Page

1. Report No. DOT-TST-75-97	2. Government Accession No. PB 245400	3. Recipient's Catalog No.
4. Title and Subtitle STANDARDS for the Preparation and Publication of DOT Scientific and Technical Reports		5. Report Date May 1976
		6. Performing Organization Code DOT/TST
7. Author(s)		8. Performing Organization Report No. DOT-TST-75-97
9. Performing Organization Name and Address Office of R&D Plans and Resources, Office of the Assistant Secretary for Systems Development and Technology, U.S. Department of Transportation		10. Work Unit No. (TRAIS)
		11. Contract or Grant No.
12. Sponsoring Agency Name and Address SAME AS ABOVE		13. Type of Report and Period Covered N/A
		14. Sponsoring Agency Code TST

15. Supplementary Notes

This document is used as performance exhibit in all DOT RD&D contracts and grants.

16. Abstract

The document provides standards for the preparation, publication, and distribution of scientific and technical reports issued by DOT and DOT contractors. The standards do not apply to technical or training manuals, journal articles, brochures or pamphlets. The document contains guidelines for report formats, title pages and covers, metric conversions, use of illustrations and physical layout requirements. Report review and acceptance procedures are specified, as are the rules for assignment of document numbers and distribution of accepted reports.

17. Key Words technical documentation, R&D management, information processing	18. Distribution Statement This document is available to the U.S. public through the National Technical Information Service, Springfield, Virginia, 22161.

19. Security Classif. (of this report)	20. Security Classif. (of this page)	21. No. of Pages	22. Price
Unclassified	Unclassified	21	

Form DOT F 1700.7 (8-72) Reproduction of form and completed page is authorized

TABLE OF CONTENTS

LIST OF FIGURES

1. PURPOSE. This document establishes standards for scientific and technical reports prepared by or for the Department of Transportation (DOT). The application of these standards aids in the interchange of scientific and technical information and in the reduction of costs in the preparation, publication, and dissemination of such information. This document is reviewed periodically by a DOT R&D Information Working Group convened to ensure its compatibility with Congressional and DOT requirements and conformance to national documentation standards. It also is included as Appendix 1 to Order DOT 1700.18B, "Acquisition, Publication, and Dissemination of DOT Scientific and Technical Reports," and as an exhibit in all DOT R&D procurement contracts, as applicable.

2. EXCLUDED DOCUMENTS. These standards do not apply to operational instructions and directives, technical or training manuals, journals and journal article manuscripts, preprints or reprints, brochures or pamphlets. Also excluded are Technical Sharing, management and administrative documents. However, at the discretion of the sponsoring organization, those documents which contain significant technical information may be included.

3. REFERENCES.

a. American National Standards Institute (ANSI) document, Writing Abstracts, Z39.14-1971; $3.50; Available from the American National Standards Institute, 1430 Broadway, New York, NY 10018.

b. Bibliographic Procedures and Style: A Manual for Bibliographers in the Library of Congress. $0.70. Available from the Superintendent of Documents, U.S. Government Printing Office, D.C. 20402.

c. ANSI document, Guidelines for Format and Production of Scientific and Technical Reports, Z39.18-1974, $4.00; Available from the American National Standards Institute, 1430 Broadway, New York, NY 10018.

d. U.S. Congress Joint Committee on Printing, Current Government Printing and Binding Regulations; Available from the Joint Committee on Printing, U.S. Congress, Committee Room S-151, U.S. Capitol, Washington, D. C. 20510.

e. Department of Defense/Engineers Joint Council, Thesaurus of Engineering and Scientific Terms, 1967. Available from the Engineers Joint Council, 345 East 47th Street, New York, NY 10017.

f. Department of Commerce, List of Business and Economic Terms, COM-73-12000, December 1973, AD-641092; Available from the National Technical Information Service, Springfield, Virginia 22161.

g. ASTM document Metric Practice Guide, Z210.1 - 1973. Available from the American Society for Testing and Materials, 1916 Race Street, Philadelphia, PA 19103, designation E380-72.

h. Department of Commerce, Units of Weights and Measures, National Bureau of Standards Miscellaneous Publication 286, SD Catalog No. C13.10.286, $2.25; Available from the Superintendent of Documents, U.S. Government Printing Office, Washington, D. C. 20402.

4. DEFINITIONS.

a. Sponsoring Agency: The DOT organizational element having program responsibility for scientific or technical effort. A public body (state, city, commission, etc.) also may be a sponsoring agency in cooperation with a DOT element.

b. Performing Organization: The DOT element (either headquarters, field, or laboratory), contractor, grantee or recipient of DOT R&D funds reporting specific scientific or technical research findings which result from investigations, demonstrations, tests or experiments.

c. Interim Report: A report issued during the course of a project, or a major part thereof, to reflect completion of a specific phase of a project assignment. This method of reporting can also be used where a periodic report of progress is of interest to the transportation community at large. Interim reporting, for example, can be the communications medium for early reporting under a project of considerable duration or relative complexity.

d. Final Report: A report issued at the completion of a project, or a major portion thereof, to signify the accomplishment and formal "close-out" of a project.

e. Transportation Research Information Services Network (TRISNET): TRISNET is sponsored by DOT to improve the efficiency and effectiveness of the transportation-related information services. It includes such services as the Highway Research Information Service (HRIS), Railroad Research Information Service (RRIS), Maritime Research Information Service (MRIS), TRISNET Repository at NTIS, and other services still under development.

5. REQUIREMENTS. DOT-sponsored scientific and technical reports shall conform to the requirements of Document DOT-TST-75-97, security regulations, and implementing instructions of the sponsoring organization.

6. LEGAL CONSIDERATIONS. The Government may be subject to liability for misuse of the literary or intellectual property (patents, trademarks, "proprietary information") of others. To ensure that technical reports can receive the widest possible dissemination, report writers and editors should observe the following guidelines:

a. Copyright. No copyrighted material may be incorporated into a report unless written permission of the copyright owner has been obtained. Prior use of copyrighted material in another Government publication does not necessarily constitute permission to use it in a DOT publication. Where permission has been obtained and the material is used in a report, it shall be identified by a statement substantially as follows:

> Reprinted from (title of publication) by (name of author) by permission of (name of copyright owner). Year of first publication _____.

b. Courtesy requires that acknowledgment or credit be given (by footnote, bibliographic reference, or a statement in the text) for the use of the material contributed or assistance rendered by someone else though no copyright notice is involved.

c. Unpublished work may be protected under common law or equity even though there is no copyright notice. Problems relating to the protection given to unpublished work will be referred to the Office of the General Counsel.

d. Privately Owned Information: To avoid restriction on availability of reports, every effort should be made to avoid the use of proprietary information accepted by the Government for limited purposes. Such proprietary information will be used only if it is essential to the understanding of a report and only after approval by the Office of the General Counsel. Reports containing such proprietary information will bear a statement restricting availability and handling, as required (Paragraph 7b(9)).

e. Data Use Restriction: In the event that the Contractor furnishes any information or data which the Contractor considers to be proprietary under the terms of the contract, the Contractor shall affix the following use restriction legend to such proprietary data, shall mark such data with the number of the prime contract, and subcontract, if applicable; and shall deliver such proprietary data directly to the Government. No other legend is authorized and the Government will thereafter treat the data in accordance with such legend.

DATA USE RESTRICTION

> These data, furnished under U.S. Government Contract No. _____, may be duplicated and used by the Government with the express limitations that the data may not be disclosed outside the Government, nor be used for purposes of manufacture, without prior permission of the contractor. These restrictions do not limit the Government's rights to use or disclose any data obtained from another source without restriction. This legend shall be marked on any reproduction of these data in whole or in part.

f. Trademarks; The term "trademark" includes any word, name, symbol, device or any combination thereof, adopted and used by a manufacturer or merchant to identify his goods and distinguish them from those manufactured and/or sold by others. It is improper to use a "trademark" to identify goods not manufactured or sold by the owner of a trademark or his licensee. In general, the use of trademarks is discouraged. Where feasible, goods should be identified by a type designation or a structural feature that distinguishes them from other goods.

g. Trade Names and Manufacturer's Names:

(1) Under Section 522 of Title 5, United States Code, as implemented by DOT Public Affairs Management Manual, DOT Order 1210.5, 2-6-74, reports which once were not available to the public, may be obtained by anyone who wants them. Particularly to be avoided is the appearance of endorsing or favoring a commercial product, commodity or service. Trade names or the names of manufacturers will not be given unless the report will not contain meaningful information without them.

(2) When trade names or manufacturers names are used in a report, this fact will be specifically brought to the attention of the reviewing office before the report is approved. Such reports shall contain the following notice on the inside front cover (no border required):

NOTICE

The United States Government does not endorse products or manufacturers. Trade or manufacturer's names appear herein solely because they are considered essential to the object of this report.

(3) DOT operating elements should first refer all legal considerations to their appropriate General Counsels before seeking legal advice at the Departmental level.

7. FORMAT.

a. Order of Elements. When some or all of the following elements are appropriate for a report, they will be included and the standard order will be as follows:

	Self Cover Inside Self Cover
Front Matter	Technical Report Documentation Page Preface Metric Conversion Factors Table of Contents, List of Illustrations, List of Tables, List of Abbreviations and Symbols
Body of Report	Introduction Main Text Conclusions Recommendations
Reference Material	Appendices Glossary References Bibliography Index
	Self Cover

b. Self Cover.

(1) Description. Whenever possible, use self covers (of the same weight paper as the text) for all reports. Include on the cover the information shown in groupings plus special markings (such as security classification) as specified by the sponsoring operating elements. Recommended group related items are shown in Figure 1A. A sample of dual-sponsored cover is shown in Figure 1B. Items on self covers also may be prepared by standard typewriter.

(2) Report Number. Each report shall carry a unique alphanumeric designation provided by the sponsoring operating element (for example, CG-D-14-74; FAA-RD-75-10; or FHWA-PA-RD-75 for a state-sponsored report in cooperation with a DOT element). When a report is prepared in more than one volume, repeat the report number on all volumes and add the appropriate volume number in Roman numerals (for example, FAA-RD-75-10,I and FAA-RD-75-10,II).

(3) Title and Subtitle. Display the title prominently and use words which indicate clearly and briefly the substance of the report. Set subtitle, if used, in smaller type or otherwise subordinate it to the main title. When a report is prepared in more than one volume, repeat the primary title and report number and identify each separate volume. On reports documenting computerized models use the term "Computerized Model" as the major subtitle.

(4) Author(s). The Government Printing and Binding Regulations permit the use of the author's name on self covers. The author's name shall be subordinated in appropriately smaller type than the title. Give the name(s) of the author(s) in conventional order (for example, John R. Doe, or if author prefers, J. Robert Doe). The author's name shall not be placed on the cover if the publication is bound with a separate cover (index stock).

(5) Performing Organization and Address. Give name, street, city and zip code. List no more than two levels of an organizational heirarchy.

(6) DOT Insignia. Place the DOT insignia on all reports as shown in Figures 1A and 1B. In cases where a public body (state, city, commission, university, etc.) is a sole sponsoring agency, the DOT insignia may be deleted and appropriate public body substitution made. Dual sponsorship may be recognized by inclusion of appropriate insignias and identifying information.

(7) Date. Each report shall carry a date by month and year. The sponsoring element may specify the basis for dating. If it does not, the originator will provide a date.

(8) Type of Report. Indicate nature of report, i.e., interim or final. If the report is a revision, state whether it supersedes the previous edition.

(9) Distribution Statement. Each DOT sponsoring operating element shall assign a distribution statement, which is placed on the self cover and printed on all copies. The statement that appears on the cover must also appear in Block 18 of the Technical Report Documentation Page. Refer to Order DOT 1210.5, DOT Public Affairs Management Manual of 2-6-74 for additional information concerning availability of documents. Use one of the following as appropriate:

GROUP I

Report No. CG-D-14-74

GROUP II

Title

REMOTE SENSING OF OIL SLICKS

Subtitle (if any)

Author(s)

Performing organization name and address

John R. Doe

ABC Laboratories, Inc.

405 Main Street

Zedburg, TN 37000

DOT insignia

Date

SEPTEMBER 1974

Type of report

FINAL REPORT

Distribution statement

Document is available to the U.S. public through the National Technical Information Service, Springfield, Virginia 22161.

GROUP III

Prepared for

DOT Operating element

DOT headquarters element and address

U.S.DEPARTMENT OF TRANSPORTATION

UNITED STATES COAST GUARD

Office of Research and Development

Washington, D.C. 20590

FIGURE 1A. SAMPLE, SELF COVER (Items on cover also may be prepared by standard typewriter).

Report No. FAA-RD-74-144

EVALUATION OF THE STRUCTURAL INTEGRITY OF AN AIRCRAFT LOADING WALKWAY UNDER SEVERE FUEL-SPILL FIRE CONDITIONS

George B. Geyer
Lawrence M. Neri
Charles H. Urban

U.S. DEPARTMENT OF TRANSPORTATION
FEDERAL AVIATION ADMINISTRATION
National Aviation Facilities Experimental Center
Atlantic City, New Jersey 08405

ata

OCTOBER 1974

FINAL REPORT

Document is available to the U.S. public through the National Technical Information Service, Springfield, Virginia 22161.

Prepared for

U. S. DEPARTMENT OF TRANSPORTATION
FEDERAL AVIATION ADMINISTRATION
Systems Research & Development Service
Washington, D. C. 20590

AIR TRANSPORT ASSOCIATION OF AMERICA
Washington, D.C. 20006

FIGURE 1B. SAMPLE, SELF COVER - DUAL SPONSORS (Items on cover also may be prepared by standard typewriter).

(a) Document is available to the U.S. public through the National Technical Information Service, Springfield, Virginia 22161.

(b) Approved for U.S. Government only. This document is exempted from public availability because (fill in reason). Transmittal of this document outside the U.S. Government must have prior approval of the (fill in DOT sponsoring element).

(c) Approved for (fill in DOT sponsoring operating element) only. This document is exempted from public availability because (fill in reason). Transmittal of this document outside the (fill in sponsoring operating element), Department of Transportation must have prior approval of the (fill in responsible office).

(10) Sponsoring Name and Address. Give name, city, state, and zip code of the sponsoring agency. When a public body (state, city, commission, university, etc.) is a sponsoring administration in cooperation with the DOT, grouping will reflect this cooperation, such as:

Prepared for
DEPARTMENT OF TRANSPORTATION
Atlanta, GA 30334

in cooperation with
(DOT Headquarters element, address)

c. Inside Self Cover. Special notices, such as reproduction, safety precautions, sponsor's disclaimer, and statement of compliance with special regulations are placed on the inside self cover as required by the sponsoring agency. Place the following notice on the inside self cover of all DOT reports:

NOTICE

This document is disseminated under the sponsorship of the Department of Transportation in the interest of information exchange. The United States Government assumes no liability for the contents or use thereof.

d. Front Matter.

(1) Technical Report Documentation Page (DOT F 1700.7). Include one completed Technical Report Documentation Page as the first right-hand page after the cover in each report or volume. The documentation page replaces the traditional front title page and abstract page. A model completed page is shown in Figure 2A, with instructions for completing the documentation page for the author's use. Adequate and accurate completion of this page will assist documentation of a report. The documentation page also may be distributed in lieu of copies of the published report. This form is available for DOT operating elements from the DOT Warehouse, Publications and Forms, TAD-443.1. For contractors and grantees, the documentation page is available from the Contracting Officers of the sponsoring operating elements. The information presented on the documentation page is the basis for input into the TRISNET and the National Technical Information Service (NTIS).

Technical Report Documentation Page

1. Report No. FAA-RD-74-74,I	2. Government Accession No.	3. Recipient's Catalog No.
4. Title and Subtitle ANALYSIS OF PREDICTED AIRCRAFT WAKE VORTEX TRANSPORT AND COMPARISON WITH EXPERIMENT Volume I - Wake Vortex Predictive System Study		5. Report Date April 1974
		6. Performing Organization Code
7. Author(s) M.R. Brashears, N.A. Logan, S.J. Robertson, K.R. Shrider and C.D. Walters		8. Performing Organization Report No. LM-74-2B
9. Performing Organization Name and Address Lockheed Missiles & Space Company, Inc.* Huntsville Research & Engineering Center 4800 Bradford Drive Huntsville AL 35807		10. Work Unit No. (TRAIS) FA405/R4115
		11. Contract or Grant No. DOT-TSC-593
12. Sponsoring Agency Name and Address U. S. Department of Transportation Federal Aviation Administration Systems Research and Development Service Washington DC 20590		13. Type of Report and Period Covered Final Report April to December 1973
		14. Sponsoring Agency Code FAA/ARD-500

15. Supplementary Notes

*Under contract to: U. S. Department of Transportation, Transportation Systems Center, Kendall Square, Cambridge MA 02142

16. Abstract

A unifying wake vortex transport model is developed and applied to a wake vortex predictive system concept. The fundamentals of vortex motion underlying the predictive model are discussed including vortex decay, bursting and instability phenomena. A parametric and sensitivity analysis is presented to establish baseline uncertainties in the algorithm to allow meaningful comparison of predicted and measured vortex tracks. A detailed comparison of predicted vortex tracks with photographic and groundwind vortex data is presented. Excellent agreement between prediction and measurement is shown to exist when sufficient wind data are available. Application of the Pasquill class criteria is shown to be an effective technique to describe the wind profile in the absence of detailed wind data. The effects of wind shear and the Ekman spiral on vortex transport are discussed. It is shown that the combination of wind shear and ground plane may be possible mechanisms underlying vortex tilting and a theoretical explanation is advanced that is somewhat supported by comparison with the experimental data. Finally, recommendations for further vortex data collection in the vicinity of an airport are presented.

Volume II, 246 pages, contains appendices.

17. Key Words Vortices, Aircraft Wakes, Wake Turbulence, Wind Shear, Wake Vortex Predictive System, Ground Plane, Vortex Tilting, Vortex Transport	18. Distribution Statement Document is available to the U.S. public through the National Technical Information Service, Springfield, Virginia 22161.

19. Security Classif. (of this report)	20. Security Classif. (of this page)	21. No. of Pages	22. Price
Unclassified	Unclassified	256	

Form DOT F 1700.7 (8-72) Reproduction of form and completed page is authorized.

FIGURE 2A. SAMPLE, COMPLETED TECHNICAL REPORT DOCUMENTATION PAGE

Make items 1, 4, 5, 7, 9, 12, 13, and 18 agree with the corresponding information on the report cover. Use all capital letters for main title (item 4). Leave items 2, 6, and 22 blank. Complete the remaining items as follows:

3. Recipient's Catalog No. Reserve for use by report recipient.

8. Performing Organization Report No. Insert if performing organization wishes to assign this number.

9. Performing Organization Name and Address (include zip code).

10. Work Unit No. (TRAIS). Use the number code from the applicable research and technology resume which uniquely identifies the work unit in the Transportation Research Activity Information Service. For Highway Planning and Research (HP&R) Program reports, include the FPC Code assigned in the study.

11. Contract or Grant No. Insert the number of the contract or grant under which the report was prepared. For Highway Planning and Research (HP&R) Program reports, include also the State study number.

15. Supplementary Notes. Enter information not included elsewhere but useful, such as: Prepared in cooperation with..., Translation of (or by)..., Presented at conference of..., To be published in..., Other related reports.

16. Abstract. Include a brief (not to exceed 200 words) factual summary of the most significant information contained in the report. An abstract should state the purpose, methods, results, and conclusions of the work effort. For the purpose, include a statement of goals (objectives, aims). For methods, include experimental techniques or the means by which the results were obtained. Results (findings) are the most important part of the abstract and selection should be based on one, or several of the following: new and verified events, findings of permanent value, significant findings which contradict previous theories, or findings which the author knows are relevant to a practical problem. Conclusions should deal with the implications of the findings and how they tie in with studies in related fields. Do not repeat title or other items provided on this page. When a report consists of a number of volumes, include the title of each of the other volumes in each abstract.

    Reports presenting the results of computerized model development will use the following structure for the preparation of abstracts:

    1. Technical Model description (Nature of the model or simulator)
    2. Areas of model application
    3. Special model requirements
        a. Areas of model application
        b. Other special considerations.

17. Key Words. Select specific and precise terms or short phrases that identify the principal subjects covered in the report. The sponsoring element may specify that key words shall conform to standard terminology, such as that given in the Department of Defense/Engineers Joint Council Thesaurus of Engineering and Scientific Terms, or a Thesaurus of Terms established by the sponsoring element.

18. Distribution Statement. Enter one of the authorized statements (Paragraph 7b(9)) used to denote releasability to the public or a limitation on dissemination for reasons other than security of defense information. Refer questions on the statements to the sponsoring element.

19. Security Classification (of report). Note: Reports carrying a security classification will require additional markings giving security and downgrading information as specified by the sponsoring element.

20. Security Classification (of this page). Note: Because this page may be used in preparing announcements, bibliographies, and data banks, it should be unclassified, if possible. If a classification is required, identify the classified items on the page by an appropriate symbol.

21. No. of Pages. Insert the number of pages having printed material, including front and inside covers.

FIGURE 2B. INSTRUCTIONS FOR COMPLETING TECHNICAL REPORT DOCUMENTATION PAGE.

(2) Preface. Among possible uses, a preface may show the relation of the work reported on to associated efforts, give credit for the use of copyrighted material, and acknowledge significant assistance received.

(3) Metric Conversion Factors. Include a Metric Conversion Factors page (Figure 3) in the report to provide the reader with information for converting to metric measures. Additional units may be included as they apply to the contents of the report. The Metric Conversion Factors page may be obtained from the DOT Warehouse, Publications and Forms, TAD-443.1, or copied from this document. Include page on reverse side of preface or form.

(4) Table of Contents. In the Table of Contents (not suggested for a report of less than ten pages), list principal headings as they appear in the report with the page numbers on which the headings occur. Do not list items from the front matter. Start the Table of Contents on a right-hand page.

(5) List of Illustrations. Furnish a list of illustrations only if it is considered essential. List figure number, legend, and page number of each illustration. Abbreviate lengthy legends.

(6) List of Tables. Furnish a list of tables only if it is considered essential. List table number, caption, and page number of each table. Abbreviate lengthy captions.

(7) List of Abbreviations and Symbols. Define symbols and abbreviations where first introduced in the text. When symbols and abbreviations are numerous, furnish a separate list with definitions. If list is used, include organization symbols, e.g., IEEE, ANSI, etc.

NOTE: To save space, items (5), (6), and (7) should follow on at the end of the Table of Contents. Do not present each of these on a new page.

e. Body of Report.

(1) General. The contents and organization of the body of a report shall be determined by the nature of the work. However, limit the contents to that information required by the sponsoring organization to inform the reader. Eliminate unnecessary details and appendixes. To reduce primary and secondary reproduction costs and to expedite review, approval, printing and distribution, keep the number of pages to a minimum. Start the first section on a right-hand page. This section usually provides work objectives and background information. Succeeding sections describe work procedures, apparatus involved, tests performed, results achieved, and related matters, as appropriate. The terminal sections usually present conclusions and recommendations. Start new sections or chapters at the top of the next succeeding page, be it left- or right-handed.

(2) Headings. Headings shall stand out from the text with their relative importance apparent.

(3) Numbering System. Number headings and paragraphs only when the numbers are needed for clarity or when extensive cross-references are used.

METRIC CONVERSION FACTORS

Approximate Conversions to Metric Measures

Symbol	When You Know	Multiply by	To Find	Symbol
		LENGTH		
in	inches	*2.5	centimeters	cm
ft	feet	30	centimeters	cm
yd	yards	0.9	meters	m
mi	miles	1.6	kilometers	km
		AREA		
in^2	square inches	6.5	square centimeters	cm^2
ft^2	square feet	0.09	square meters	m^2
yd^2	square yards	0.8	square meters	m^2
mi^2	square miles	2.6	square kilometers	km^2
	acres	0.4	hectares	ha
		MASS (weight)		
oz	ounces	28	grams	g
lb	pounds	0.45	kilograms	kg
	short tons (2000 lb)	0.9	tonnes	t
		VOLUME		
tsp	teaspoons	5	milliliters	ml
Tbsp	tablespoons	15	milliliters	ml
fl oz	fluid ounces	30	milliliters	ml
c	cups	0.24	liters	l
pt	pints	0.47	liters	l
qt	quarts	0.95	liters	l
gal	gallons	3.8	liters	l
ft^3	cubic feet	0.03	cubic meters	m^3
yd^3	cubic yards	0.76	cubic meters	m^3
		TEMPERATURE (exact)		
°F	Fahrenheit temperature	5/9 (after subtracting 32)	Celsius temperature	°C

*1 in = 2.54 (exactly). For other exact conversions and more detailed tables, see NBS Misc. Publ. 286, Units of Weights and Measures, Price $2.25, SD Catalog No. C13.10:286.

Approximate Conversions from Matric Measures

Symbol	When You Know	Multiply by	To Find	Symbol
		LENGTH		
mm	millimeters	0.04	inches	in
cm	centimeters	0.4	inches	in
m	meters	3.3	feet	ft
m	meters	1.1	yards	yd
km	kilometers	0.6	miles	mi
		AREA		
cm^2	square centimeters	0.16	square inches	in^2
m^2	square meters	1.2	square yards	yd^2
km^2	square kilometers	0.4	square miles	mi^2
ha	hectares (10,000 m^2)	2.5	acres	
		MASS (weight)		
g	grams	0.035	ounces	oz
kg	kilograms	2.2	pounds	lb
t	tonnes (1000 kg)	1.1	short tons	
		VOLUME		
ml	milliliters	0.03	fluid ounces	fl oz
l	liters	2.1	pints	pt
l	liters	1.06	quarts	qt
l	liters	0.26	gallons	gal
m^3	cubic meters	35	cubic feet	ft^3
m^3	cubic meters	1.3	cubic yards	yd^3
		TEMPERATURE (exact)		
°C	Celsius temperature	9/5 (than add 32)	Fahrenheit temperature	°F

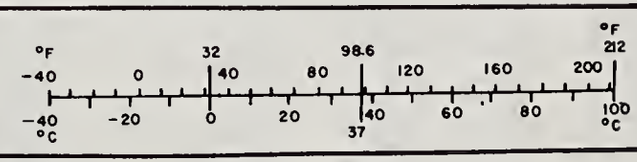

FIGURE 3. METRIC CONVERSION FACTORS

f. Reference Material.

(1) Appendixes. Start an appendix on a right-hand page. Do not use a separate page to announce an appendix; rather, the appendix identification should appear at the top of the page with the content starting immediately on the same page. Each appendix shall be cited in the table of contents and from the appropriate position in the body of the report. When more than one appendix is used, designate them Appendix A, Appendix B, etc. When only one appendix is used, no designation is necessary.

(2) Glossary. Define special terms where first introduced in the text. When such terms are numerous, list them as a glossary in alphabetical order.

(3) References, Bibliography, and Footnotes. Include complete identification of references as footnotes on bottom of page where first cited to aid in reading from microform. When references are numerous, they should be included in a reference list in the back of the report. Entries should be presented in a uniform style, with complete identifying data, in accepted bibliographic format. Each entry should include authors, title, sources, identifying numbers, pagination, and dates. Abbreviations are not recommended and should be used sparingly. Refer to Paragraph 3b, REFERENCES.

(4) Index. If an index is included for a lengthy report, make it as complete as the nature of the report and its probable usage requires.

g. Illustrations.

(1) General. Treat illustrations consistently throughout a report. Prepare them so that details and callouts (labels) will be clearly legible after final reproduction. Crop or mask photographs to eliminate insignificant detail. Do not add border frames to outline illustrations or use backdrop tones in line drawings unless they contribute substantially to clarity. For reproducible copy, submit only clean line art and only original photographs (or other types of tone art) rather than screened (halftone) reproductions and indicate smallest size acceptable.

(2) Placement. Locate illustrations near the first text reference made to them except in special situations, such as when a report contains only a few text pages and many illustrations; in such cases, place the illustrations in numerical sequence in the back of the report. It is preferable that illustrations be placed so that they may be viewed without turning the page sideways. If an illustration has to be placed sideways on a page, orient it so that the top of the illustration is at the left side of the page.

(3) Callouts (Labels). So far as practicable, place callouts horizontally, unboxed and near the item called out, as shown in Figure 4. Make callouts in upper case lettering and consistent in size and typeface throughout a report. Use a typewriter of headliner type size. Strive for high contrast and readability.

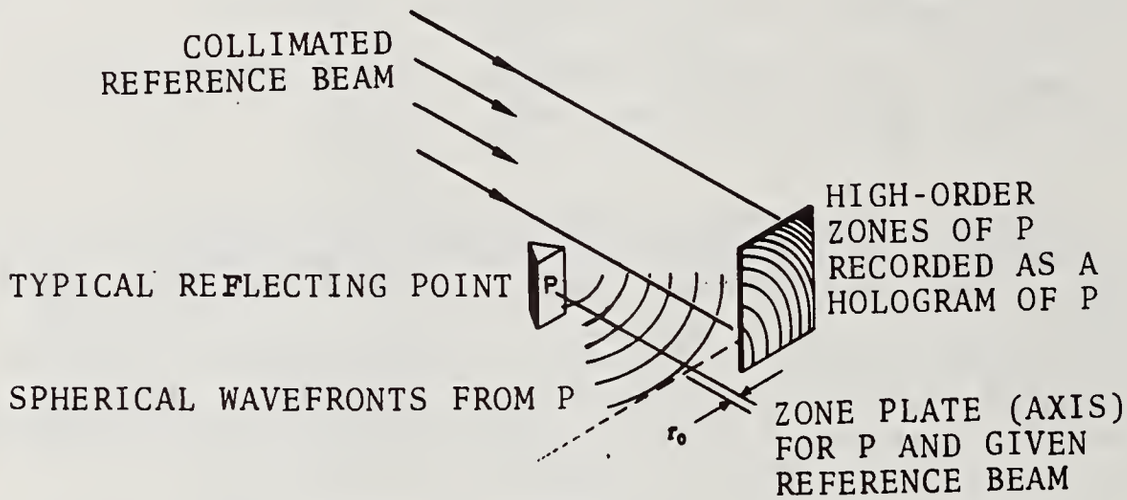

FIGURE 4. SAMPLE PLACEMENT OF CALLOUTS (LABELS).

(4) Color. Color must not be used unless specifically authorized by the sponsoring agency. Often screens, cross-hatching, pattern lines, reverses, dots, or similar techniques can be used as effective substitutes for color (Figure 5). Refer to Government Printing and Binding Regulations for general provisions concerning color printing.

(5) Fold-ins. Wherever possible, avoid the use of oversize illustrations that must be folded. Often most large illustrations can be planned for facing pages. When used, fold-ins should be presented on a right-hand page.

(6) Numbering. Number illustrations to which reference is made in the text consecutively in Arabic numeral, preceded by the word "FIGURE", for example, FIGURE 1, FIGURE 2, or FIGURE 1-1, FIGURE 1-2, FIGURE 2-1, etc. Number illustrations within appendixes in a manner consistent with the appendix letter, such as Figure A-1, Figure B-2, etc. If only one appendix, use Figure A-1, etc.

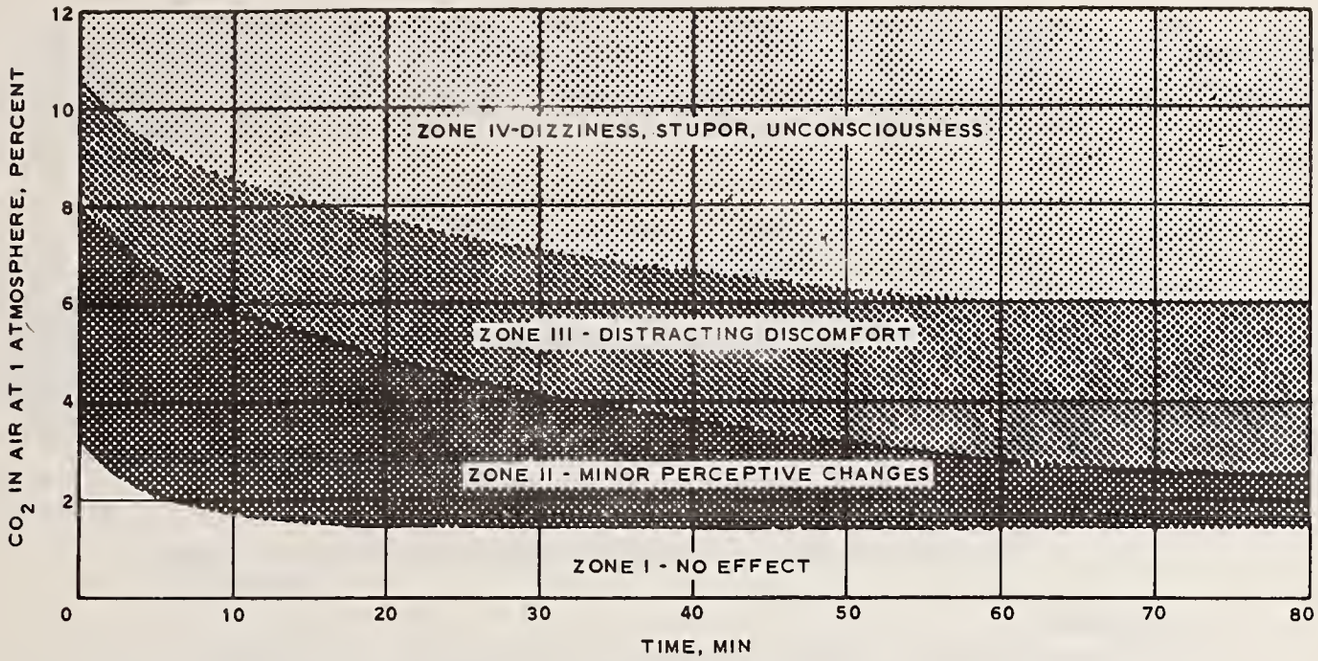

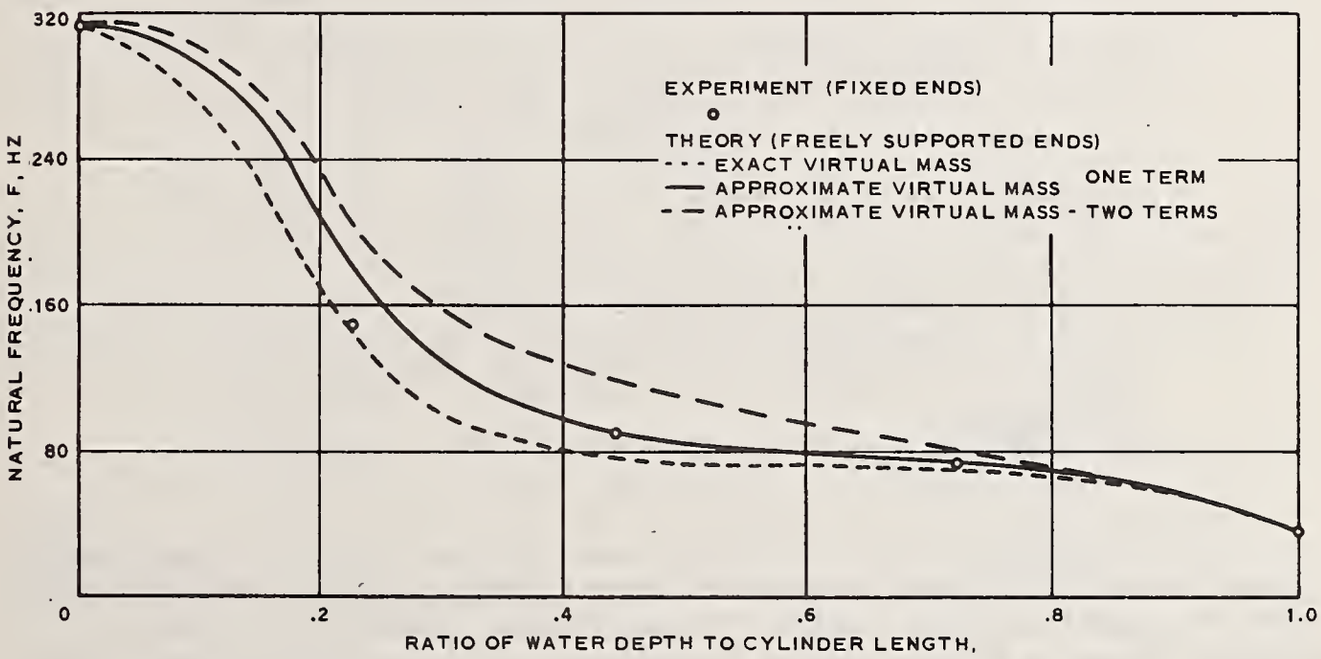

FIGURE 5. SAMPLE, SCREENING (TOP) AND CODING (BOTTOM) USED AS SUBSTITUTES FOR COLOR.

(7) Figure Titles. Accompany each illustration, except for self-explanatory sketches, by a descriptive legend. The legend is ordinarily placed under the illustration and follows the figure number. Figure titles should appear as upper case and of the same type style as used for the text.

h. Tables.

(1) General. Tables should be as simple as possible so that the reader can easily grasp the meaning of the data. Use letters and numbers in tables that will be at least 6-point or larger in the final reproduced report. If tables are to be reproduced directly from a computer generated printout, the characters on such printout should be sharp and unbroken. A sample table is shown in Figure 6.

TABLE 1. -SHORT-TIME XXXXXXXXXXXXXXXXXXXXXX ← *Caption*

Boxhead

Temperature, K	Specimen type (a)	Ultimate tensile strength, N/m^2	Elongation between buttonheads, cm	Reduction of area, percent
Footnote reference		Tungsten		
1700	1	2200×10^3	1.57	95
1900	1	1312	1.60	75
2060	1	987	.69	36
2260	1	674	.51	25

[a]Recrystallized at 2370 K for 1/2 hour in vacuum. ← *Footnote*

FIGURE 6. SAMPLE TYPICAL TABLE LAYOUT. For more complete information on tables, see the Government Printing Office Style Manual.

(2) Placement. Locate tables near the first text reference made to them, except in special situations such as when a report contains only a few text pages and many tables. In such cases, place the tables in numerical sequence in the back of the report. It is preferable that tables be placed so that they may be viewed without turning the page sideways. If a table has to be located sideways on a page, orient it so that the top of the table is at the left side of the page.

(3) Headings and Columns. Give repetitive unit of measure or degree in the column headings of tables. (Example %; $; °F.) Do not repeat in the columns. When tables continue on two or more pages, note the continuation and repeat the table and column headings and rulings on each page.

(4) Numbering. Number tables to which reference is made in the text consecutively in Arabic numerals, preceded by the word "TABLE", for example, TABLE 1, TABLE 2, or TABLE 1-1, TABLE 1-2, TABLE 2-1, etc. Number tables within appendixes in a manner consistent with the Appendix letter, such as "TABLE A-1, TABLE B-2," etc.

(5) Captions. Give each table, except short ones which run in with the text, a descriptive caption following the table number. Place caption above the table.

i. Equations.

(1) General. Prepare mathematical matter with extreme care. Use machine or transfer-type composition when available. Identify symbols after first use to aid in reading from microform or in a separate list. Make opening and closing parentheses, brackets, and braces the same height as the tallest expression they enclose. Separate numerator from the denominator with a line as long as the longer of the two. Center both numerator and denominator on the line.

(2) Placement. Indent or center a displayed equation in the line immediately following the first text reference made to it. Break equations before an equal, plus, or multiplication sign. Align a group of separate but related equations by the equal signs and indent or center the group as a whole. Short equations not part of a series may be placed in the text rather than displayed.

(3) Numbering. Number equations which are part of a series or which are referred to in the text consecutively in Arabic numerals; for example, (1), (2), or (1-1), (1-2), (2-1), etc. Enclose each number in parentheses at the right margin on the last line of the equation numbers. Number equations within appendixes in a manner consistent with the appendix letter, such as (A-1), (B-2), etc.

j. Distribution List. Do not include a distribution list in a DOT report.

8. PRODUCTION

a. Composition

(1) Type Size. Use a minimum 8-point type size or typewriter for the main text of the report.

(2) Final Camera-Ready Copy. For maximum page coverage, do not use block paragraphs. Rather, return all succeeding lines to the left margin.

Unless a report is classified, do not use: "This page left blank intentionally." This increases the number of pages to be printed and increases the cost and time required to make pages ready for printing, i.e., sizing pages, making plates or negatives, etc. Note blank pages to the printing specialist by circle folio, or number pages, for example 7/8, which instructs the printer and reader that page 8 is blank. Do not include two and three line pages, noting "Chapter and Title" only or "Appendix and Title" only. Place this information at top of page containing the start of text. This eliminates the cost and time to make pages ready for printing.

(3) Line Spacing. Use a single or 1 1/2 spacing for reports prepared by typewriter for reproduction, except when extra spacing between lines is necessary to assure clarity of run-in equations, symbols, etc.

(4) Margins. Use margins of no more than 1 inch on all sides of text pages.

(5) Page Numbering. Wherever practicable, number all pages throughout a report consecutively at the bottom center. Number preliminary pages, containing the Technical Report Documentation Page, Preface, Metric Conversion Factors, Table of Contents, etc., in lower case Roman numerals: i, ii, iii, etc. Number pages containing main text and illustrations in Arabic numerals: 1, 2, 3, etc. In special cases, pages may be numbered by section or chapter: 1-1, 1-2; 2-1, 2-2, etc. Number appendixes in alphanumerics: A-1, A-2; B-1, B-2, etc. Odd numbered pages are right-hand pages and even-numbered pages are left-hand pages.

b. Limitation on Printing. Contractors shall furnish a reproducible copy on one side only of the final approved report within the time specified in the contract. Only clean tone or line art and original photographs and text suitable for camera-ready copy for offset printing shall be submitted. Contractors shall not become prime sources of printing for agencies unless so authorized by the Joint Committee on Printing. Refer to the Government Printing and Binding Regulations. Both duplicating and printing must conform to these regulations. Printing shall not be a preplanned contractural requirement.

c. Workmanship. Reports published under this document are microreproduced. Filled-in or broken letters, illegible text or illustrations (including lettering), or similar imperfections are not acceptable. Copies of computerized printout material made on electrostatic photo copy machines are generally of poor quality for further reproduction. Original printouts or photographic reproductions using high contrast file processing techniques are generally acceptable.

d. Self Cover Size, Stock, and Ink. Whenever possible, reports shall be printed with self covers (of the same weight paper as the text) cut to page size, using black ink. Covers with windows or plastic covering over self covers shall not be used.

e. Page Size, Stock, and Ink. Reports shall be printed using paper approximately 8 by 10 1/2 inches or 8 1/2 by 11 inches in size. Use black ink on opaque white paper. Both sides of the sheet shall be used to the maximum extent practicable. Different colored paper in reports sections shall not be used.

f. Binding. Side-stitching, saddle-stitching or glue-back binding shall be requested. Other types of binding require specific approval of the sponsoring administration.

g. Decorative Features and Advertising. Advertising display on pages shall not be used.

9. REVIEW, ACCEPTANCE AND DISTRIBUTION.

a. Review and Acceptance. To ensure that DOT technical reports conform to the established standards of format and distribution and to protect the Government interest against possible litigation, all reports shall be reviewed and accepted as follows:

(1) Review. After completion of the technical work related to a contract, grant, or project phase, the performing organization shall submit advance draft copies of the report with a letter of transmittal to the concerned element of the DOT sponsoring administration for review and approval in accordance with the appropriate work agreement. Such review is for the purpose of assuring that the report is of high professional quality and in compliance with the project assignment and with the guidelines established by this document.

(2) Acceptance. A critique of reports prepared by DOT elements will be provided performing organizations in writing by the DOT sponsoring administration concerned, within 60 days of receipt of draft copies. For contractor prepared reports, approval will be provided in writing by the contracting officer or his designated representative.

(3) Waiver of Approval Authority. In cases where the sponsoring organization waives its review and approval authority, such waiver shall be specified in the agreement documentation.

b. Unlimited Distribution. The following distribution will be included for scientific and technical reports sponsored by DOT administrations for unlimited distribution. Each report will contain a completed Documentation Page (DOT F 1700.7) and be accompanied by one NTIS Accession Notice Card* (Form NTIS-79) when forwarded directly to NTIS. Item 3 on the NTIS Accession Notice Card must contain at least the following information: complete title of the report, date of the report (month and year), author(s), and the organization's report number. These cards will be returned to the addressees, bearing the NTIS order (accession) number and price data. Blank cards are available from NTIS.

(1) TRISNET Repositories and number of copies to each.

*National Technical Information Service DOT Input Section Springfield, Virginia 22161	12
NOTE: Federal Aviation Administration and U. S. Coast Guard may continue their current practices of providing these reports via the Defense Documentation Center (DDC)	
DOT Headquarters Library Services Division, TAD-491	6
Transportation Systems Center, TSC-151 Kendall Square Cambridge, Massachusetts 02142	3
Northwestern University TRISNET Repository Transportation Center Library Evanston, Illinois 60201	3
University of California TRISNET Repository Institute of Transportation and Traffic Engineering Berkeley, California 94720	3

(2) TRISNET Abstracting and Indexing; one copy of topically-relevant reports is distributed to each address.

Highway Research Information Service
Washington, DC 20418

Railroad Research Information Service
Washington, DC 20418

Maritime Research Information Service
Washington, DC 20418

Transportation Tunneling Information Center
2595 Yeager Road
West Lafayette, Indiana 46906

c. Limited Distribution. The following distribution will be included for scientific and technical reports sponsored by DOT administrations, which have limited distribution.

Office of the Secretary, TST-25.1 - 1 copy

Defense Documentation Center
Cameron Station
Alexandria, Virginia 22314 - 12 copies

d. General. Keep a limited number of copies (as determined to be necessary for internal DOT use) in the Warehouse (TAD-443.1). The documents so deposited should not remain on shelf for more than two years from the date of the report.

☆U.S. GOVERNMENT PRINTING OFFICE: 1976-211-173/510

2/20

Justification for Printing of Urban Transportation Reports

The Secretary is authorized to undertake research, development and demonstration projects in all phases of urban mass transportation which he determines will assist in the reduction of urban transportation needs, the improvement of mass trans-service or the contribution of such service toward meeting total urban transportation needs at minumum cost.

There is much information generated as the result of public and private transportation research and demonstrations.

In addition, there is much technology in other fields such as aerospace that could be used in transportation. Currently, little of this information finds its way back to those people who have need of it. UMTA and other transportation research results and related information should be disseminated to state and local departments of transportation planning, engineers, government officials administrative and technical personnel to transit operators, social and applied scientists, suppliers and contractors, students and other relevant and interested groups. Without a central organized source of information, efforts are duplicated and knowledge available is not applied.

Section 4(a) of the DOT Act provides that the Secretary shall "promote and undertake development, collection, and dissemination of technological, statistical, economic and other information relevant to domestic and international transportation".

Urban Transportation Reports will help to achieve UMTA goals by making research results and other technical and program information more readily available and useful to the people mentioned above. The Report will be a basic and continually synthesized updated source of information; an indexed, loose-leaf series of reports on past and current research, development, demonstration, planning and other information, domestic and foreign, on urban transportation. Material will be in the format of loose-leaf volumes to be entitled URBAN TRANSPORTATION REPORTS. Presently there is no such source of technical information on mass transit. It will replace the current Directory of Research Development and Demonstration Projects which only includes abstracts of UMTA's RD&D projects. It will, also, contain manufactors specifications.

The contractor will collect, analyze, and synthesize information and prepare abstracts, indexes, digests, graphics, audio-visual presentations and other necessary information tools. He will be responsible for planning and editing, producing a simple format and considering production economics. He will prepare layout for publication and update the reports with monthly supplements.

Either the contractor or GPO will be responsible for the printing, binding, franking, packaging, distribution, updating of the mailing list, distributing updated materials and keeping all unsold copies updated monthly. It is anticipated that after

two years of distribution the concerned public will become aware of the value of such a publication and the contractor will be willing to ~~pay for~~ sell the service so that it can become self-supporting. For this reason, it may be advantageous for the contractor to have the printing capability from the beginning of the contract.

The purpose of URBAN TRANSPORTATION REPORTS is to make available in one set of volumes a comprehensive information system in the field of urban mass transportation.

UMTA will underwrite the cost of initial development and publication of 2,000 copies for two years. Fifty additional copies will be for official use.

The contractor will be responsible for developing promotional literature and developing sales for the service and if the demand warrents, may prepare or have GPO prepare and sell more than the underwritten 2,050 copies at a price to be jointly determined by UMTA and the contractor (and GOP).

Funds received from the sale of subscriptions shall be deducted from the contract price. UMTA reserves the right to audit the contractors accounts at any time during the duration of the contract.

In addition to marketing efforts by the contractor, Urban Transportation Reports will be listed in the catalogue of GPO and will be supplied by either the contractor or GPO.

URBAN TRANSPORTATION REPORTS

STATEMENT OF WORK

SECTION 1: INTRODUCTION

1. The Urban Mass Transportation Administration (UMTA) of the U.S. Department of Transportation proposes to contract for services in the design, production, publication, and dissemination of URBAN TRANSPORTATION REPORTS. The contractor will collect, analyze, digest, publish and distribute relevant information in the field of urban mass transportation.

2. The contractor will prepare indexes, digests, summaries, graphics, audio-visual presentations, and other necessary information tools; layout, print, bind, and publish per this specification several loose-leaf volumes to be entitled URBAN TRANSPORTATION REPORTS; distribute and disseminate same per a list to be supplied by UMTA; and maintain and update same with monthly supplements.

3. Specifications and other requirements of this proposal are outlined below.

SECTION 2: PURPOSE

1. The purpose of URBAN TRANSPORTATION REPORTS is to make available in one set of volumes a comprehensive research information system in the field of urban mass transportation. The publication will be of major utility to a broad audience spectrum including planners, engineers, government officials, administrative and technical personnel of transit operators, social and applied scientists, suppliers and contractors, students, and other relevant and interested groups.

SECTION 3: SPECIFICATION

1. The publication is to be contained in approximately fifteen loose-leaf ring binders to be designed and produced by the contractor with appropriate stamping on the outer covers. Material will be inserted loose-leaf in the binders and printed with computer-set type on 8 1/2 x 11 inch paper stock.

2. The organization of URBAN TRANSPORTATION REPORTS should include tab sections for major areas of UMTA research activity such as bus, rail, and new systems, as well as more general categories for planning, economic research, systems analysis, intermodal integration, and other relevant topical categories. A section relating to regulatory material pertinent to UMTA research contracts should also be included. Material prepared by the contractor is to be appropriately divided and tabbed as designed by the contractor.

SECTION 4: SCOPE

1. Contractor is to collect, analyze, and digest relevant research, demonstration, planning and other studies generated by UMTA projects; publications relevant to the UMTA program of agencies of the Department of Transportation; readily available commercial research information; and readily available foreign research, development, and planning information.

2. UMTA will make available to Contractor copies of existing project reports, abstracts of same, and other resources of the Transit Research Information Center to assist contractor in initial preparation of URBAN TRANSPORTATION REPORTS.

SECTION 5: CONTENT

1. Contractor will prepare and publish abstracts and digests of both completed and on-going urban transportation research, development, and demonstration projects and reports; significant excerpts from same; comprehensive indexes per specification below; state-of-the-art summaries and comparable syntheses of related material; and other relevant data, analysis, and reference tools.

2. Abstracts will be of no more than 500 words in length and will capsulize major topics contained in the reports or covered in the projects. Contractor will select excerpts from actual report text and/or data presentations (i.e. charts, maps, diagrams, tables, graphs, etc.) which are of sufficient importance to be included in original form. Brief state-of-the-art summaries will be prepared for major topical subdivisions.

3. Indexes will cross-reference all material by title, author, grantor, grantee, contractor, city, project number, other unique numbers (all where applicable), and subject.

4. Index will include a transit industry marketing aid in the form of an index of contractors and subcontractors by project in sufficient detail to facilitate broad commercial participation in the UMTA program.

SECTION 6: INITIAL CONTENT

1. The initial publication will cover research and other work completed or on-going at the time of contract. Abstracts of completed UMTA project reports will be included. Topical digests will emphasize material three years old or less. The initial content is expected to run approximately 7,000 pages.

SECTION 7: UPDATING AND MONTHLY SUPPLEMENTS

1. Contractor will update the publication on a monthly basis. Supplements will include digests and excerpts of new reports and projects, revised indexes to reflect changes and periodic state-of-the-art summaries. Each supplement is expected to run approximately 450 pages.

2. Supplements will be distributed by the contractor to all recipients in the same manner as the full file of URBAN TRANSPORTATION REPORTS.

SECTION 8: SPECIAL REQUIREMENTS OF CONTRACTOR

1. Contractor will have an in-house capability for the design and production of multi-media, audio-visual presentations and for computer information retrieval per requirements specified below.

2. Contractor will design and produce each year, one (1) viewgraph and one (1) slide with audio-cassette presentation of the overall UMTA research and development program from textual materials developed in URBAN TRANSPORTATION REPORTS and otherwise. Contractor will provide twenty-five (25) copies of each presentation for distribution by contracter per a distribution list to be supplied by UMTA.

3. Contractor will design and produce audio-visual presentations of two types:

a) viewgraph transparencies in base black and two additional colors, with an average of twenty(20) overlays total in fifty (50) transparencies; transparencies to be in separate envelops collated into sets and wrapped.

b) 35mm slides and narrated cassette for each presentation; including photography, art production, script writing, etc.; tape cassette for manual advance with audible signal; second side of tape will be for automatic advance and have inaudible advance signal; presentation in vinyl binder printed to specifications with clear vinyl storage sheets for 35mm slides including printed script in addition to tape cassette.

4. Materials collected and generated by contractor will be committed to computer as a master data base for retrieval according to the comprehensive subject index. Contractor will provide all necessary facilities and professional manpower to achieve this task.

5. Contractor will submit all written and audio-visual editorial material to UMTA for approval prior to publication.

SECTION 9: DISTRIBUTION

1. Contractor will be responsible for the distribution and dissemination of all initial volumes, monthly supplements, and audio-visual presentations. UMTA will provide contractor with an initial comprehensive distribution list, a list being developed independently of this contract. Contractor will prepare and produce his own mailing labels and be responsible for maintaining and updating the initial distribution list.

2. Contractor will use UMTA franking privileges for postage. Contractor will be responsible for packaging, mailing, and distribution.

3. UMTA will instruct its contractors, grantees, and others to provide URBAN TRANSPORTATION REPORTS contractor with necessary work-in-progress and other information including necessary photographs, graphics, and data presentations, as well as visual materials for audio-visual presentations.

SECTION 10: PROCUREMENT AND SUBSCRIPTIONS

1. UMTA expects to underwrite the cost of 2,000 copies of URBAN TRANSPORTATION REPORTS to adequately disseminate the research results of the program, and UMTA expects to do so for a period of two years.

2. Over and above the 2,000 copies, contractor will be permitted to sell to commercial subscribers the service for the per set contract price to the government. Contractor will prepare necessary promotional material to obtain commercial subscriptions to URBAN TRANSPORTATION REPORTS and make every reasonable marketing effort to develop as many commercial paid subscriptions as possible.

SECTION 11: DURATION AND FUNDING

1. UMTA expects to have the above work carried out during Fiscal Years 1973, 1974, and 1975. Contractor's proposal should set forth payments expected in each quarter of each Fiscal Year beginning with the third quarter of FY'73 (January - March 1973). For planning purposes contractor should not expect FY'73 funding to exceed $300,000. Contractor should submit fixed price proposal for all work called for above with the understanding the government will only be obligated for the FY'73 funding at this time. Subsequent year funding is subject to their availability in FY'74 and FY'75.

2. Contractor's fixed price proposal should set forth: a) initial publication and first year maintenance and updating; b) second year maintenance and updating; and c) allowances to the government on the Contract Price for paid commercial subscriptions received.

SECTION 12: SCHEDULE

1. Contractor should complete the design, indexing, digesting, graphics and all preparation of the initial set of volumes in sixteen (16) weeks from the date of contract.

2. Printing, production and distribution of set of volumes to 2,000 users designated by UMTA should begin approximately six (6) months after the date of contract.

3. The first monthly supplement should be completed and shipped two (2) months after shipment of the initial set of volumes. After this time, additional supplements will be shipped monthly.

4. Audio-visual presentations should be completed and shipped one (1) month after shipment of the initial set of volumes.

Technical Report Documentation Page

1. Report No.	2. Government Accession No.	3. Recipient's Catalog No.
4. Title and Subtitle		5. Report Date
		6. Performing Organization Code
7. Author(s)		8. Performing Organization Report No.
9. Performing Organization Name and Address		10. Work Unit No. (TRAIS)
		11. Contract or Grant No.
12. Sponsoring Agency Name and Address U.S. Department of Transportation Urban Mass Transportation Administration 400 Seventh Street, S.W. Washington, D. C. 20590		13. Type of Report and Period Covered
		14. Sponsoring Agency Code
15. Supplementary Notes		
16. Abstract		
17. Key Words		18. Distribution Statement Available to the Public through the National Technical Information Service, Springfield, Virginia 22161.

19. Security Classif. (of this report)	20. Security Classif. (of this page)	21. No. of Pages	22. Price
Unclassified	Unclassified		

Form DOT F 1700.7 (8-72) Reproduction of completed page authorized

Technical Report Documentation Page

1. Report No.	2. Government Accession No.	3. Recipient's Catalog No.
4. Title and Subtitle		5. Report Date
		6. Performing Organization Code
7. Author(s)		8. Performing Organization Report No.
9. Performing Organization Name and Address		10. Work Unit No. (TRAIS)
		11. Contract or Grant No.
12. Sponsoring Agency Name and Address U.S. Department of Transportation Urban Mass Transportation Administration 400 Seventh Street, S.W. Washington, D. C. 20590		13. Type of Report and Period Covered
		14. Sponsoring Agency Code
15. Supplementary Notes		
16. Abstract		
17. Key Words		18. Distribution Statement Available to the Public through the National Technical Information Service, Springfield, Virginia 22161.

19. Security Classif. (of this report)	20. Security Classif. (of this page)	21. No. of Pages	22. Price
Unclassified	Unclassified		

Form DOT F 1700.7 (8-72) Reproduction of completed page authorized

Technical Report Documentation Page

1. Report No.	2. Government Accession No.	3. Recipient's Catalog No.
4. Title and Subtitle		5. Report Date
		6. Performing Organization Code
7. Author(s)		8. Performing Organization Report No.
9. Performing Organization Name and Address		10. Work Unit No. (TRAIS)
		11. Contract or Grant No.
12. Sponsoring Agency Name and Address U.S. Department of Transportation Urban Mass Transportation Administration 400 Seventh Street, S.W. Washington, D. C. 20590		13. Type of Report and Period Covered
		14. Sponsoring Agency Code
15. Supplementary Notes		
16. Abstract		
17. Key Words		18. Distribution Statement Available to the Public through the National Technical Information Service, Springfield, Virginia 22161.

19. Security Classif. (of this report)	20. Security Classif. (of this page)	21. No. of Pages	22. Price
Unclassified	Unclassified		

Form DOT F 1700.7 (8-72) Reproduction of completed page authorized

Technical Report Documentation Page

1. Report No.	2. Government Accession No.	3. Recipient's Catalog No.
4. Title and Subtitle		5. Report Date
		6. Performing Organization Code
7. Author(s)		8. Performing Organization Report No.
9. Performing Organization Name and Address		10. Work Unit No. (TRAIS)
		11. Contract or Grant No.
12. Sponsoring Agency Name and Address U.S. Department of Transportation Urban Mass Transportation Administration 400 Seventh Street, S.W. Washington, D. C. 20590		13. Type of Report and Period Covered
		14. Sponsoring Agency Code

15. Supplementary Notes

16. Abstract

17. Key Words	18. Distribution Statement Available to the Public through the National Technical Information Service, Springfield, Virginia 22161.

19. Security Classif. (of this report)	20. Security Classif. (of this page)	21. No. of Pages	22. Price
Unclassified	Unclassified		

Form DOT F 1700.7 (8-72) Reproduction of completed page authorized

Technical Report Documentation Page

1. Report No.	2. Government Accession No.	3. Recipient's Catalog No.
4. Title and Subtitle		5. Report Date
		6. Performing Organization Code
7. Author(s)		8. Performing Organization Report No.
9. Performing Organization Name and Address		10. Work Unit No. (TRAIS)
		11. Contract or Grant No.
12. Sponsoring Agency Name and Address U.S. Department of Transportation Urban Mass Transportation Administration 400 Seventh Street, S.W. Washington, D. C. 20590		13. Type of Report and Period Covered
		14. Sponsoring Agency Code
15. Supplementary Notes		
16. Abstract		
17. Key Words	18. Distribution Statement Available to the Public through the National Technical Information Service, Springfield, Virginia 22161.	

19. Security Classif. (of this report)	20. Security Classif. (of this page)	21. No. of Pages	22. Price
Unclassified	Unclassified		

Form DOT F 1700.7 (8-72) Reproduction of completed page authorized

Technical Report Documentation Page

1. Report No.	2. Government Accession No.	3. Recipient's Catalog No.
4. Title and Subtitle		5. Report Date
		6. Performing Organization Code
7. Author(s)		8. Performing Organization Report No.
9. Performing Organization Name and Address		10. Work Unit No. (TRAIS)
		11. Contract or Grant No.
12. Sponsoring Agency Name and Address U.S. Department of Transportation Urban Mass Transportation Administration 400 Seventh Street, S.W. Washington, D. C. 20590		13. Type of Report and Period Covered
		14. Sponsoring Agency Code
15. Supplementary Notes		
16. Abstract		
17. Key Words	18. Distribution Statement Available to the Public through the National Technical Information Service, Springfield, Virginia 22161.	

19. Security Classif. (of this report)	20. Security Classif. (of this page)	21. No. of Pages	22. Price
Unclassified	Unclassified		

Form DOT F 1700.7 (8-72) Reproduction of completed page authorized

In 1976 the Urban Mass Tra[illegible]ortation Administratioon of th[illegible].S. Depatment of Transportation established the present program--Study of Flywheel Energy Storage--directed toward the demonstration and ultimate production of energy efficient transit vehicles.

-- to determine the practicality and viability of flyweel propulsion for urban mass transit vehicles.

The study began with a review of the U.S. transit ~~000~~ properties requirements, which showed that the most suitable vehicle for deployment of flywheel propulsion is the full-size transit bus. Several propulsion concepts were hypothesized and subjected to comparative analysis with present diesel buses, trolley coaches, and battery buses in regard to performance and life-cycle economics. This screening resulted in the establishment of the following basic concepts that can provide various types of high quality transit service: Pure flywheel propelled bus; Flywheel/diesel enging hybrid bus; Flywheel-augmented trolley coach; and Flywhee/battery hybrid bus.

The design studies that were conducted for the four propulsion congigurations then showed a high degree of commonality of components among the four concepts. Final life-cycle cost analyses showed alll four concepts to be in a competitive range with present transit vehicles. Plans were made then for a Phase II development program that will result in the design, fabrication, and testing of a all four propulsion configurations in full-size buses within 36 months.

This final report, volume!, presents ~~the~~ a summary of the ~~res-~~ Phase I results of the Study of Flywheel Energy Storage, Part I and ~~the final report~~ comprises five separate volumes: "Executive Summary," "Systems Analysis," "SystemMechanization," "Life-Cycle Costs," and "Vehicle Tests." ~~All 5 volumes are availabe at NTIS.~~ ~~Phase I results~~ Phase I also includes the plans for a Phase II development program as well as conclusions, recommendations, and references

Industrial Relations

Information Aids

Inner City

Instrumentation

Interfaces

Instrumentation

Insulation

Insurance

Inter city Transportation

INTERNATIONAL

Intersections and Crossings

Intermodal, ~~Terminals~~ Competition
Integration
Terminals

Joints and Jointing

Joint Development

Joint

Labor Relations

Land, Acquisition
Use

Lane, Reserved
Separation

Life Cycle Costing

Lights and Lighting

Line Supervision

Logistics

Maintenance, Costs
Equipment
Facilities
Personnel

Management, Operations and Techniques
Planning and Analysis
Training Techniques

in

TITLE:

AUTHOR:

DATE: PROJECT NO.:

KEYWORDS:

NTIS ORDER NO.: PRICE:

TITLE:

AUTHOR:

DATE: PROJECT NO.:

KEYWORDS:

NTIS ORDER NO.: PRICE:

TITLE:

AUTHOR:

DATE: PROJECT NO.:

KEYWORDS:

NTIS ORDER NO.: PRICE:

TITLE:

AUTHOR:

DATE: PROJECT NO.:

KEYWORDS:

NTIS ORDER NO.: PRICE:

TITLE:

AUTHOR:

DATE: PROJECT NO.:

KEYWORDS:

NTIS ORDER NO.: PRICE:

TITLE:

AUTHOR:

DATE: PROJECT NO.:

KEYWORDS:

NTIS ORDER NO.: PRICE:

Technical Report Documentation Page

1. Report No.	2. Government Accession No.	3. Recipient's Catalog No.
UMTA-CA-06-0106-77-1		

4. Title and Subtitle	5. Report Date
STUDY OF FLYWHEEL ENERGY STORAGE VOLUME 1: EXECUTIVE SUMMARY	September 1977
	6. Performing Organization Code
7. Author(s) L.J. Lawson, A.K. Smith, and G.D. Davis	8. Performing Organization Report No.
9. Performing Organization Name and Address AiResearch Manufacturing Company of California 2525 W. 190th Street Torrance, California 90509	10. Work Unit No. (TRAIS) CA-06-0106
	11. Contract or Grant No. DOT-UT-60097T
12. Sponsoring Agency Name and Address U.S. Department of Transportation Urban Mass Transportation Administration 400 Seventh Street, S.W. Washington, D. C. 20590	13. Type of Report and Period Covered Final Report Volume 1 of 5 Volumes
	14. Sponsoring Agency Code

15. Supplementary Notes

Phase I of the program, Study of Flywheel Energy Storage, consists of 5 separate volumes, respectively: "Executive Summary," "Systems Analysis," "System Mechanization," "Life-Cycle Costs," and "Vehicle Tests."

16. Abstract

In 1976, the Urban Mass Transportation Administration established the present program--Study of Flywheel Energy Storage--to determine the practicality and viability of flywheel propulsion systems for urban mass transit vehicles. The study began with a review of the U.S. transit properties requirements, which showed that the most suitable vehicle for deployment of flywheel propulsion is the full-size transit bus. Several propulsion concepts were hypothesized and subjected to comparative analysis with present diesel buses, trolley coaches, and battery buses in regard to performance and life-cycle economics. This screening resulted in the establishment of the following basic concepts that can provide various types of high quality transit service: Pure flywheel propelled bus; Flywheel/diesel engine hybrid bus; Flywheel-augmented trolley coach; and Flywheel/battery hybrid bus. The design studies that were conducted for the four propulsion configurations then showed a high degree of commonality of components among the four concepts. Final life-cycle cost analyses showed all four concepts to be in a competitive range with present transit vehicles. Plans were then made for a Phase II development program that will result in the design, fabrication, and testing of all four propulsion configurations in full-size buses within 36 months.

This final report, Volume I, presents a summary of the Phase I results of this program, as well as conclusions, recommendations, references, and the plans for a Phase II development program.

17. Key Words		18. Distribution Statement
Buses	Regenerative Braking	Available to the Public through the National Technical Information Service, Springfield, Virginia 22161.
Flywheels	Kinetic Energy	
Energy Storage	Electric Drive	
Energy Conservation	Vehicles	
Electric Drive	Load Levelling	

19. Security Classif. (of this report)	20. Security Classif. (of this page)	21. No. of Pages	22. Price
Unclassified	Unclassified	126	

Form DOT F 1700.7 (8-72) Reproduction of completed page authorized

DEPARTMENT OF TRANSPORTATION

ROUTE SLIP

DATE 3/8/72

TO: NAME	ORG/RTG SYMBOL
~~Bill Allison~~	UOA-2
Room 9324	
PHIL HUGHES	

- [ ] PER YOUR REQUEST
- [ ] FOR YOUR INFORMATION
- [ ] PER OUR CONVERSATION
- [ ] NOTE AND RETURN
- [ ] DISCUSS WITH ME
- [ ] FOR YOUR APPROVAL
- [ ] FOR YOUR SIGNATURE
- [ ] COMMENT
- [ ] TAKE APPROPRIATE ACTION
- [ ] PLEASE ANSWER
- [ ] PREPARE REPLY FOR SIGNATURE

OF _____

REMARKS:

As promised here are my comments on what needs to be done concerning UMTA R+D reports

Carroll

+ copies for Pat, Boz + Bruno —

FROM:	TELEPHONE NO.	ORG/RTG SYMBOL
	64419	

FORM DOT F 1320.9 (5-67) FORMERLY FORM OST F 1320.1 GPO 904-204

Form DOT F 1320.1 (1-67)

UNITED STATES GOVERNMENT

Memorandum

DEPARTMENT OF TRANSPORTATION

OFFICE OF THE SECRETARY

DATE: March 7, 1972

In reply refer to: DOT/TPI-52

SUBJECT: Urban Transportation Reports

FROM : C. Carroll Carter
Office of International Programs

TO : Administrator, UMTA
Deputy Administrator
Assistant Administrator for Research, Development and Demonstrations

For nearly two years, efforts have been made to collect, inventory, abstract, index, publish, and disseminate the results of reports on UMTA financed research and development. The objective has been twofold: one, to make information available to the public on the research results and accomplishments of Federally financed projects and discharge the responsibility to disseminate data on the mass transit state-of-the-art; and two to provide DOT and UMTA managers with research results with which to better manage and direct the Federal urban transportation program.

The first step in the development of a system to provide this information is complete, namely the inventory, abstract and index to the research reports.

It seems to me it is now necessary to do the following to make the most of the good work that has gone before and to fully capitalize on the potential program value of a system of Urban Transportation Reports.

1) publish the abstract reports;

2) prepare an RFP for publication including design layout, format and periodic updating of publication; i.e., loose-leaf single page format, printed twice a year;

3) assignment of UMTA staff or interim contract for maintenance, updating and accessibility to reports;

4) contract for the preparation of a specification for Urban Transportation Reports to include:

a) layout, format and content;

b) keyword, title, author, NTIS PB number and project number index;

c) instructions to project sponsor;

d) instructions to URD and UAD on procedure to incorporate all reports into UMTA reports system and facilitate incorporation into larger DOT TRACE and other information retreival systems;

5) assist NTIS (National Technical Information Service, Springfield, Virginia) in adapting revised urban transportation key words and publishing annually a revised Urban Transportation Bibliography;

6) systematic issuing of abstracts and findings from research including press releases and interpretive stories and articles on significance and meaning of research; what have we learned?, what is the state of the art?, what do we need to research further? etc.

7) preparation of a request for proposal to now broaden the UMTA research information resource to include obtaining data, demonstration results and technical information from foreign and other sources against a common keyword index; the purpose is to avoid costly duplication of parallel national mass transit research cooperation with a view to cost- and task-sharing of projects. The systematic reporting of research information is the logical first step. UMTA would lead the Department in such an effort.

There is no duplication in the above proposals with the UMTA support of the Highway Research Board and its information program. Urban Transportation Reports goes to UMTA discharging its very specific responsibility to disseminate and use information derived from its research.

All that has been said above also applies to Technical Studies. Presently the findings of technical studies are not included in the UMTA literature. They should be. The present R&D research report effort should be broadened to include technical studies with reports abstracted against key words and results available as described above.

C. Carroll Carter

C. Carroll Carter

Enclosure

March 31, 1970

The Administrator

UPA-1

Assistant Administrator for Public Affairs

Public Transportation Reports

We are receiving an increasing number of requests for information on the findings and accomplishments of UMTA projects. This includes capital grant projects as well as those in Research, Development and Demonstrations.

There is a pressing need for us to make widely available and with bros distribution the results of our work and to have an orderly, systematic method of updating and distribution.

Attached is a proposal for organizing, writing and publishing a key word index with subject references and project summaries for a series of Public Transportation Reports. It is not unlike the Highway Research Board Abstracts and any number of other compilations of data on various other aspects of transportation. (There is no such compilation or systematic method of information dissemination in public transportation.)

Prior to having Public Transportation Reports available, we need to publish a short, quick, updated bibliography at the very least. It is quite clear that as the number of inquiries increase and our program gets larger, a systematic catalogue of project accomplishments and results is essential. The Federal Clearinghouse does not duplicate or otherwise make this same information available. The Clearinghouse complements this information for those who want copies of reports. The same would be true after publication of our index and project summaries.

Recommendation: That this office would like to proceed to work with Procurement in the solicitation and evaluation of this and other proposals to accomplish this very important information and public affairs objective. Following preparation of a request for proposal and the evaluation of various proposals received, we would then return to you with further recommendations as to the cost and whether or not to proceed.

CONCURRENCES	
RTG. SYMBOL	
INITIALS/SIG.	
DATE	
RTG. SYMBOL	
INITIALS/SIG.	
DATE	
RTG. SYMBOL	
INITIALS/SIG.	
DATE	
RTG. SYMBOL	
INITIALS/SIG.	
DATE	
RTG. SYMBOL	
INITIALS/SIG.	
DATE	
RTG. SYMBOL	
INITIALS/SIG.	
DATE	
RTG. SYMBOL	
INITIALS/SIG.	
DATE	
RTG. SYMBOL	
INITIALS/SIG.	
DATE	

cc: UCA-2
UAD
UPO
UPP
URD
UCC

C. Carroll Carter
Assistant Administrator for
Public Affairs

FAA Form 1360-14 (Rev.)

OFFICIAL FILE COPY

Phil Hughes

this is in response to your request / JP 6/27

6/27/72

Jerry –

From what I can make of this (I'm not aware of "the work done" mentioned in para 2 of the memo), I don't think it applies to T-9 reports, as these reports reflect, ~~are~~ basically, individual studies of unique situations for the primary ~~[illegible]~~ use of the quantum. Their universal, or broad, applicability is questionable, although prof. civil planning theories and practices are employed. I therefore believe that imposing a uniform format for T-9 reports would be of minimum benefit, particularly due to the fact they are of interest only as they relate to a particular situation,

rather than relating to a total R&D program, which concern appears to be the situation. This order addresses

S Bea

UNITED STATES GOVERNMENT

Memorandum

DEPARTMENT OF TRANSPORTATION
URBAN MASS TRANSPORTATION ADMINISTRATION

DATE: JUN 20 1972

In reply refer to:

Memo-action

SUBJECT: Section 9 Study Reports

FROM : Director, University Grant Programs Division

TO : Acting Associate Administrator for Program Operations

Attached is a draft copy of DOT Order 1700.18 pertaining to Publication and Distribution of DOT Scientific and Technical Reports.

I believe that you are aware of the work that has been done to bring together in useable form the reports resulting from UMTA projects including those of Section 9.

To help provide on a continuing basis reports that are easier to use, I would like to consider making the attached DOT Order applicable also to Section 9 reports.

Your comments on the application of the DOT Order will be appreciated.

Philip G. Hughes

Department of Transportation
Office of the Secretary
Washington, D.C.

ORDER

DOT ORDER 1700.18

SUBJECT: PUBLICATION AND DISTRIBUTION OF DOT SCIENTIFIC AND TECHNICAL REPORTS

---

1. PURPOSE. This order establishes DOT policy on the acquisition, format, and distribution of technical reports resulting from DOT-funded R&D projects.

2. CANCELLATION. DOT Order 1700.18, Format for Scientific and Technical Reports, 25 July 1969, is cancelled.

3. REFERENCE. DOT document, DOT-TST-72-1, "Format and Distribution Requirements for DOT Scientific and Technical Reports."

4. SCOPE. This order applies to interim and final technical reports prepared by and for the Office of the Secretary (OST), ~~Transportation Systems Center (TSC),~~ and all operating administrations. In addition, pursuant to delegation by the National Transportation Safety Board (NTSB) under Section 5(m) of the DOT Act, this order is applicable as a general guideline to NTSB. Excluded are NTSB accident reports and studies, non-technical studies, letter reports, technical or training manuals, catalogs, administrative or fiscal reports, or journal article manuscripts, preprints or reprints submitted as technical reports. However, if such documents are distributed to the National Technical Information Service, Springfield, Virginia 22151, the Technical Report Documentation Page, must be a part of each copy.

5. BACKGROUND. This order and the referenced DOT document are a product of the 1971 recommendations of the DOT Task Force on Technical Reports. The Task Force, convened to review the soundness and adequacy of DOT Order 1700.18 of 25 July 1969 (now cancelled), found that national interest dictates that all scientific and technical reports produced by the agencies of the United States Government are appropriately organized and available at a reasonable cost to the U.S. technological community. To this end, the Federal Council for Science and Technology (FCST) and its Committee on Scientific and Technical Information (COSATI) established certain policies concerning the payment of journal publication fees and the handling

---

DISTRIBUTION: All Secretarial Offices, all operating Admini- Dist: TST-25
strations, National Transportation Safety Board

of technical reports by the agencies of the U.S. Government. Additionally, COSATI issued "Guidelines to Format Standards for Scientific and Technical Reports Prepared by or for the Federal Government" and recommended their adoption by the executive agencies as part of their agency-wide reporting specifications. Using the Guidelines as a base, the Assistant Secretary for Systems Development and Technology established a Department-wide standard and issued it as the DOT document DOT-TST-72-1, "Format and Distribution Requirements for DOT Scientific and Technical Reports." This document is intended to aid in the interchange of scientific and technical data and in reducing the costs of preparing, storing, and retrieving scientific and technical documentation.

6. RESPONSIBILITIES.

a. The Assistant Secretary for Systems Development and Technology is responsible for the guidance and surveillance of the implementation of this order and for coordination of supplemental instructions issued by the operating administrations. Additionally, he will be responsible for providing the central point of control for R&D reports prepared by and for the Secretarial offices.

b. Operating administrations and other Secretarial offices' administrations are responsible for establishment of specific points of control for their technical reports, for the implementation of this order, and for establishment of internal procedures for review, acceptance, or non-acceptance of technical reports prepared by their organizations, contractors, grantees, and other recipients of R&D funds. Additionally, they are responsible for forwarding of one copy of the mandatory Technical Report Documentation Page (DOT Form F 1700.7) to TST-25 for entry into the Transportation Research Activities Information System (TRAIS). Contracting officers issuing R&D contracts, grants, and inter-agency agreements are responsible for incorporation in each such agreement the following clause:

"Interim and final technical reports resulting from this agreement shall be prepared and distributed in accordance with the specifications of the DOT-TST-72-1, 'Format and Distribution Requirements for DOT Scientific and Technical Reports.' Copies of this requirement document may be obtained from the National Technical Information Service, Springfield, Virginia, 22151, by ordering document number PB _____."
Price: $3.00 paper copy, $.95 microfiche per copy.

c. All DOT organizations that conduct or sponsor R&D are responsible for budgeting and paying for the costs of the subsequent dissemination of technical results. Included is the responsibility of paying for journal publication fees if such publications meet all of the following criteria:

(1) The work was supported by the DOT R&D contract, grant, or interagency agreement.

(2) The article is accepted by the DOT technical project monitor as a valid technical report, to be deposited at and distributed by the NTIS to any requesting government agencies or its R&D contractor.

(3) The journal involved is not operated for profit.

(4) The charges are levied impartially on all research papers published by the journal, whether by non-government or government authors.

(5) The journal article carries a notation acknowledging the DOT sponsorship of the work.

7. DOCUMENT AVAILABILITY. DOT-TST-72-1 is available from the DOT Distribution Operations Unit, TAD 484.3, for DOT agencies and the Contracting Officers only. Contractors and grantees should order DOT-TST-72-1 from the National Technical Information Service, Springfield, Virginia 22151.

8. IMPLEMENTING INSTRUCTIONS.

a. Operating administrations, TSC, and NTSB shall prepare within 60 days from the date of this order internal supplemental instructions in the expeditious implementation of this order. Internal instructions shall include processing procedures for review, acceptance, and non-acceptance of reports prepared by contractors, grantees, operating administrations, TSC, and other governmental agencies. Special reporting instructions not covered in DOT-TST-72-1 or the supplemental instructions shall be included in the appropriate agreement documentation.

b. Administration's supplemental instructions shall be coordinated with the Office of the Assistant Secretary for Systems Development and Technology, R&D Information Officer, TST-25.

FOR THE SECRETARY OF TRANSPORTATION

DOT-TST-72-1

FORMAT AND DISTRIBUTION REQUIREMENTS FOR DOT SCIENTIFIC AND TECHNICAL REPORTS

MARCH 1972

Office of Assistant Secretary for
Systems Development and Technology
Department of Transportation
Washington, D.C. 20590

FORMAT AND DISTRIBUTION REQUIREMENTS FOR DOT SCIENTIFIC AND TECHNICAL REPORTS

TABLE OF CONTENTS PAGE

FORMAT AND DISTRIBUTION REQUIREMENTS FOR DOT SCIENTIFIC AND TECHNICAL REPORTS

1. PURPOSE. This document establishes format and distribution requirements for scientific and technical reports prepared by or for the Department of Transportation. Purposes of this document are to aid in the interchange of scientific and technical information and to reduce the costs of preparing, storing, retrieving, reproducing, and distributing scientific and technical reports.

2. FORMS OF REPORTS. This document applies to reports furnished in the following forms:

Manuscript:	Text and illustrations assembled for review and editing.
Reproducible copy:	Text and illustrations ready for reproduction.
Reproduced copy:	Reports duplicated or printed for distribution; also referred to as paper copy (PC).
Microform:	Reports produced in miniature on on film (MF).

3. EXCLUDED DOCUMENTS. This document does not apply to NTSB accident reports and studies, special reports, staff studies, letter reports, technical or training manuals, catalogs, administrative or fiscal reports, or journal article manuscripts, preprints or reprints submitted as technical reports. However, if such documents are distributed to the National Technical Information Service, Springfield, Virginia, 22151, the Technical Report Documentation Page must be a part of each copy.

4. REFERENCES.

Federal Council for Science and Technology, Committee on Scientific and Technical Information. Guidelines to Format Standards for Scientific and Technical Reports Prepared by or for the Federal Government, PB 180 600, December 1968; Federal Microfiche Standards, PB 167 630, August 1965; and Standard for Descriptive Cataloging of Government Scientific and Technical Reports, PB 173 314, October 1966. Available from National Technical Information Service, Springfield, Virginia, 22151. Price: $3:00 each paper copy. $.95 microfiche per copy.

U.S. Congress Joint Committee on Printing. Current Government Printing and Binding Regulations. Available from the Joint Committee on Printing, U.S. Congress, Committee Room S-151 U.S. Capitol, Washington, D. C. 20510.

U.S. Government Printing Office. Style Manual (latest edition). Available from the Superintendent of Documents, U.S. Government Printing Office, Washington, D.C. 20402. Price: $3.00 (1967 edition).

Department of Defense/Engineers Joint Council. Thesaurus of Engineering and Scientific Terms, 1967, Engineers Joint Council, 345 East 47th Street, N.Y., N.Y. 10017. Price: $19.50.

Other references shall be as specified by the sponsoring agency.

5. DEFINITIONS.

a. Sponsoring Agency. The organizational element having program responsibility for scientific or technical effort. A public body (state, city, commission, etc.) also may be a sponsoring agency in cooperation with a DOT operating administration.

b. Performing Organization. The DOT element (either Headquarters, field or laboratory) contractor, grantee or recipient of DOT R&D funds reporting specific scientific or technical research findings resulting from investigations, tests or experiments.

c. Interim Report. An Interim Report is issued during the course of a project etc., or a major part thereof, to reflect completion of a specific phase of a project assignment, etc. This method of reporting also can be used where periodic report of progress is of vital interest to the transportation community at large. Interim reporting, for example, can be the communications medium for early reporting under a project etc., of considerable duration or relative complexity.

d. Final Report. A Final Report is issued at the completion of a project, or a major portion thereof, to signify the accomplishment and formal "close-out" of a project assignment, etc.

e. Transportation Research Activity Information Service (TRAIS). TRAIS is an R&D management information system in the Office of the Secretary of Transportation.

6. REQUIREMENTS. Scientific and technical reports shall conform to the requirements of DOT-TST-72-1, the references cited in (4) above, security regulations and further specifications of the sponsoring agency.

7. LEGAL CONSIDERATIONS. The Government may be subject to liability for misuse of the literary or intellectual property (patents, trademarks, "proprietary information") of others. To ensure that technical reports can receive the widest possible dissemination, report writers and editors should observe the following guidelines:

a. Copyright. No copyrighted material may be incorporated in a report unless written permission of the copyright owner has been obtained. Prior use of copyrighted material in another Government publication does not necessarily constitute permission to use it in a DOT publication. Where permission has been obtained and the material is used in a report, it shall be identified by a statement substantially as follows:

> "Reprinted from (title of publication) by (name of author) by permission of (name of copyright owner). Year of first publication_____."

Courtesy requires that acknowledgment or credit be given (by footnote, bibliographic reference, or a statement in the text) for the use of the material contributed or assistance rendered by someone else though no copyright notice is involved.

Unpublished work may be protected under common law or equity even though there is no copyright notice. Problems relating to the protection given to unpublished work will be referred to the Office of the General Counsel.

b. Privately Owned Information. To avoid restriction on availability of reports, every effort should be made to avoid the use of proprietary information accepted by the Government for limited purposes. Such proprietary information will be used only if it is essential to the understanding of a report and only after approval by the Office of the General Counsel. Reports containing such proprietary information will bear a statement restricting availability and handling, as required. (Paragraph 7.b.(9)DOT Order 1700.18)

c. Data Use Restriction. In the event that the Contractor furnishes any information or data which the Contractor considers to be proprietary, the Contractor shall affix the following use restriction legend to such proprietary data, shall mark such data with the number of the prime contract, and subcontract, if applicable; and shall deliver such proprietary data directly to the Government. No other legend is authorized and the Government will thereafter treat the data in accordance with such legend.

"DATA USE RESTRICTION"

This data, furnished under U.S. Government Contract No._____, may be duplicated and used by the Government with the express limitations that the data may not be disclosed outside the Government, nor be used for purposes of manufacture, without prior permission of the contractor. These restrictions do not limit the Government's rights to use or disclose any data obtained from another source without restriction. This legend shall be marked on any reproduction of this data in whole or in part."

d. Trademarks. The term "trademark" includes any word name, symbol, device or any combination thereof, adopted and used by a manufacturer or merchant to identify his goods and distinguish them from those manufactured or sold by others. It is improper to use a "trademark" to identify goods not manufactured or sold by the owner of a trademark or his licensee. In general the use of trademarks is discouraged. Where feasible, goods should be identified by a type designation or a structural feature that distinguishes them from other goods.

e. Trade Names and Manufacturers' Names. Under Section 522 of Title 5, United Stes Code, as implemented by DOT Regulation, Part 7, Public Availability of Information, effective 4 July 1967, reports, which once were not available to the public, may be obtained by anyone who wants them. Particularly to be avoided is the appearance of endorsing or favoring a commercial product, commodity, or servicee. Therefore, unless the report will not contain meaningful information without them, trade names or the names of manufacturers will not be given.

The use of trade names or manufacturers' names in a report will be specifically brought to the attention of the reviewing office before the report is approved. Such reports shall contain the following notice on the inside front cover (no border required):

> NOTICE
>
> The United States overnment does not endorse products or manufacturers. Trade or manufacturers' names appear herein solely because they are considered essential to the object of this report. Use of this report in any manner whatsoever for advertising purposes is prohibited.

8. FORMAT.

a. Order of Elements. When some or all of the following elements are appropriate for a report, they will be included and the standard order will be as follows:

	Front Cover
Front matter	Special Notices Technical Report Documentation Page Preface Table of contents List of illustrations List of tables List of abbreviations and symbols
Body of report	Introduction Main text Conclusions Recommendations
Reference material	Appendixes Glossary of terms References Bibliography Index
	Back Cover

GROUP I PAGE 8

Report No. CG-724104:004

DOT-TST-72-1
March 1972

GROUP II

Title

REMOTE SENSING OF OIL SLICKS

Subtitle (if any)

Author(s)

John R. Doe

Performing organization name and address

ABC Laboratories, Inc.
405 Main Street
Zedburg, Tenn. 37000

DOT insignia

Date

MARCH 1972

Type of report

FINAL REPORT

Distribution statement

Document is available to the public through the National Technical Information Service, Springfield, Virginia 22151.

GROUP III

Operating DOT administration
DOT headquarters element and address

Prepared for
DEPARTMENT OF TRANSPORTATION
UNITED STATES COAST GUARD
Office of Research and Development
Washington, D.C. 20590

Figure 1. Sample Front Cover

b. Front Cover.

(1) Outside Front Cover. Either self covers (of the same paper as the text) or separate covers (of different paper than the text) are required for all reports except those furnished in manuscript form. Include on the cover the information shown in the following groupings, plus special markings (such as security classification and distribution limitations) specified by the sponsoring agency. Group related items as shown in Figure 1.

(2) Report Number. Each report shall carry a unique alphanumeric designation provided by the sponsoring agency (for example, CG-714104.004; FAA-RD-72-1; or FHWA-PA-D-72 for state-sponsored report in cooperation with DOT operating administration). If none has been assigned, use an alphanumeric designation established by the performing organization (for example, TSC-SA-72-2, MIT-R-71-8737-1); or an alphanumeric designation derived from the contract or grant number (for example, FA71WA-8737-1). Performing agency numbers are also authorized.

(3) Title and Subtitle. Display the title prominently and make it indicate clearly andbriefly the subject of the report. Set subtitle, if used, in smaller type or otherwise subordinate it to the main title. When a report is prepared in more than one volume, repeat the primary title and have subtitle identify that specific volume; for example, Volume I, Volume II.

(4) Author(s). Place the author's name on the front cover only if the report was written by him to describe specific or technical research findings resulting from investigation, tests, or experiments which he conducted. If a name is placed on the backstrip (spine) of a report, the Government Printing and Binding Regulations require that it not be placed on the front cover. In any case, the author's name shall be subordinated in appropriately smaller type than the title. Give the name(s) of the author(s) in conventional order (for example, John R. Doe, or if author prefers, J. Robert Doe).

(5) Performing Organization Name and Address. Give name, street, city, state, and zip code. List no more than two levels of an organizational hierarchy.

(6) DOT Insignia. Place the DOT insignia on all reports as shown in Figure 1. In cases where a public body (state, city, commission, university, etc.) is a sponsoring agency, the DOT insignia may be deleted and appropriate public body substitution made.

(7) Date. Each report shall carry a date. The sponsoring agency may specify the basis for dating. If it does not, the author will provide a date and indicate the basis on which it was selected (for example, date of issue, date of approval, date of preparation, etc.).

(8) Type of Report and Period Covered. Indicate interim, final, etc., and if applicable, dates covered.

(9) Distribution Statement. Each DOT sponsoring agency shall assign a distribution statement, which is placed on the front cover and printed on all copies. The statement that appears on the cover must also appear in Block 18 of the Technical Report Documentation Page. Use one of the following as appropriate:

(a) Document is available to the public through the National Technical Information Service, Springfield, Virginia 22151.

(b) Approved for U.S. Government only. This document is exempted from public availability because (fill in reason). Transmittal of this document outside the U.S. Government must have prior approval of the (fill in DOT sponsoring agency).

(c) Approved for (fill in DOT sponsoring agency) only. This document is exempted from public availability because (fill in reason). Transmittal of this document outside the (fill in sponsoring agency) Department of Transportation must have prior approval of the (fill in responsible office).

(10) Sponsoring Agency's Name and Address. Give name, city, state, and zip code. When a public body (state, city, commission, university, etc.) is a sponsoring agency in cooperation with the DOT, grouping will reflect this cooperation, such as:

Prepared for
DEPARTMENT OF HIGHWAYS
Atlanta, GA 30334

in cooperation with
(DOT OPERATING ADMINISTRATION,
Headquarters element, address)

(11) Inside Front Cover. Special notices, such as reproduction, safety precautions, sponsor's disclaimers, and statements of compliance with special regulations are placed on the inside front cover as required by the sponsoring agency. Place the following notice on the inside front cover of all DOT reports (no border required).

NOTICE

This document is disseminated under the sponsorship of the Department of Transportation in the interest of information exchange. The United States Government assumes no liability for its contents or use thereof.

c. Front Matter.

(1) Technical Report Documentation Page. Include one completed Technical Report Documentation Page as the first right-hand page after the cover in each report. A model completed page is shown in Figure 2A, with instructions for completing the form given in Figure 2B. Attachment 1 is a reproducible blank form of the documentation page for the author's use. Adequate and accurate completion of this page will assist documentation of a report. This documentation page also may be distributed in lieu of copies of the published report. This form is available from DOT Distribution Operations Unit, TAD 484.3, for DOT agencies and from the Contracting Officers of the sponsoring agencies for contractors and grantees. Local reproduction is authorized.

Technical Report Documentation Page

1. Report No. OST-ONA-71-1, V	2. Government Accession No.	3. Recipient's Catalog No.
4. Title and Subtitle A STUDY OF THE MAGNITUDE OF TRANSPORATION NOISE GENERATION AND POTENTIAL ABATEMENT Volume V - Train System Noise		5. Report Date November 1971
		6. Performing Organization Code
		8. Performing Organization Report No.
7. Author(s) Joseph A. Rock, C. Thomas Paine		
9. Performing Organization Name and Address Serendipity, Incorporated Eastern Operations Division Suite 701, 2001 Jefferson Davis Hwy. Arlington, Virginia 22202		10. Work Unit No. (TRAIS) 1224-611
		11. Contract or Grant No. DOT-OS-A9-018
12. Sponsoring Agency Name and Address Department of Transportation Office of the Secretary Office of Noise Abatement Washington, D. C. 20590		13. Type of Report and Period Covered Final Report
		14. Sponsoring Agency Code
15. Supplementary Notes		

16. Abstract

The noise from an individual vehicle is a function of the physical characteristics of the vehicle, the way in which the vehicle is operated and the construction characteristics of the vehicle's guideway, e.g., rail condition, roadbed supporting structure. Noise reduction at the source can be obtained by altering the vehicle and/or the guideway and by changing the way the vehicle is operated.

Analysis of contemporary mass transit vehicle noise indicates that the rank order of conventional rail vehicle noise sources is: (1) wheel and rail system, (2) propulsion system and (3) auxiliary equipment.

Noise levels alongside the right-of-way, are a function of the vehicle type, its operation and the configuration of the roadbed and surrounding areas.

For a given vehicle and guideway, the right-of-way configuration has the greatest impact on the sound levels received at a specific wayside location. Rail vehicle wayside noise levels can be reduced by interrupting the sound transmission paths between the vehicle and the receiver. To the extent that this is achieved, rail vehicle wayside noise levels can be reduced in a manner which is similar to that used for highway noise reduction.

17. Key Words noise, transportation noise, rail vehicle noise, surface transportation, mass transit		18. Distribution Statement Document is available to the public through the National Technical Information Service, Springfield, Virginia 22151.	
19. Security Classif. (of this report) UNCLASSIFIED	20. Security Classif. (of this page) UNCLASSIFIED	21. No. of Pages 115	22. Price $3.00 PC .95 MF

Form DOT F 1700.7

Reproduction of this page is authorized

FIGURE 2A. SAMPLE, COMPLETED TECHNICAL REPORT DOCUMENTATION PAGE.

INSTRUCTIONS FOR COMPLETING TECHNICAL REPORT DOCUMENTATION PAGE

Make items 1, 4, 5, 7, 9, 12, and 13 agree with the corresponding information on the report cover. Use all capital letters for main title (item 4). Leave items 2, 6, and 14 blank. Complete the remaining items as follows:

3. Recipient's Catalog No. Reserve for use by report recipients.

8. Performing Organization Report No. Insert if performing organization wishes to assign this number.

10. Work Unit No. (TRAIS). Use the number code from the applicable research and technology resume which uniquely identifies the work unit in the Transportation Research Activity Information Service. For Highway Planning and Research (HP&R Program) reports, include the State project number.

11. Contract or Grant No. Insert the number of the contract or grant under which the report was prepared. For Highway Planning and Research (HP&R Program) reports, include also the State study number.

15. Supplementary Notes. Enter information not included elsewhere but useful, such as: Prepared in cooperation with...Translation of (or by)...Presented at conference of...To be published in...

16. Abstract. Include a brief (not to exceed 200 words) factual summary of the most significant information contained in the report. An abstract should state the purpose, methods, results, and conclusions of the work effort. For the purpose, include a statement of goals (objectives, aims). For methods, include experimental techniques or the means by which the results were obtained. Results (findings) are the most important part of the abstract and selection should be based on one, or several of the following: new and verified events, findings of permanent value, significant findings which contradict previous theories, or findings which the author knows are relevant to a practical problem. Conclusions should deal with the implications of the findings and how they tie in with studies in related fields. Do not repeat title or other items provided on this page. When a report consists of a number of volumes, include the title of each of the other volumes in each abstract.

17. Key Words. Select terms or short phrases that identify the principal subjects covered in the report, and are of sufficiently specific and precise to be used as index entries for cataloging. The sponsoring agency may specify that the key words shall conform to standard terminology, such as that given in the Department of Defense/Engineers Joint Council Thesaurus of Engineering and Scientific Terms, or a Thesaurus of Terms established by the sponsoring agency.

18. Distribution Statement. Enter one of the authorized statements (Paragraph 8b(1)(b)7) used to denote releasability to the public or a limitation on dissemination for reasons other than security of defense information. Refer questions on the statements to the sponsoring agency.

19. Security Classification (of report). NOTE: Reports carrying a security classification will require additional markings giving security and downgrading information as specified by the sponsoring agency.

20. Security Classification (of this page). NOTE: Because this page may be used in preparing announcements, bibliographies, and data banks, it should be unclassified, if possible. If a classification is required, identify the classified items on the page by an appropriate symbol.

21. No. of Pages. Insert the number of pages.

22. Price. Insert the price (paper copy and microfiche copy) set by the National Technical Information Service or the Government Printing Office, if known.

FIGURE 2B. INSTRUCTIONS FOR COMPLETING TECHNICAL REPORT DOCUMENTATION PAGE.

(2) Preface. Among possible uses, a preface may show the relation of the work reported on to associated efforts, give credit for the use of copyrighted material, and acknowledge significant assistance received.

(3) Table of Contents. In the table of contents (not suggested for a report of less than 10 pages), list principal headings as they appear in the report with the page numbers on which the headings occur. Do not list items from the front matter. Start the table of contents on a new right-hand page.

(4) List of Illustrations. Furnish a list of illustrations only if it is considered essential. List figure number, legend, and page number of each illustration. Abbreviate lengthy legends.

(5) List of Tables. Furnish a list of tables only if it is considered essential. List table number, caption, and page number of each table. Abbreviate lengthy captions.

(6) List of Abbreviations and Symbols. Define symbols and abbreviations where first introduced in the text. When symbols and abbreviations are numerous, furnish a separate list with definitions.

d. Body of Report.

(1) General. The contents and organization of the body of a report shall be determined by the nature of the work. Start the first section on a new page. This section usually provides background information and work objectives. Succeeding sections describe work procedures, apparatus involved, tests performed, results achieved, and related matters, as appropriate. The terminal sections usually present conclusions and recommendations.

(2) Headings. Headings shall stand out from the text with their relative importance apparent. Typical heading styles are illustrated in Figure 3.

METHODS ← *First-order head*

Macroplankton ← *Second-order head*

Third-order head

Sampling—The larger and more sparse macroplankton were sampled . . . . .

. . . . . .

METHODS ← *First-order head*

Macroplankton ← *Second-order head*

SAMPLING ← *Third-order head*

The larger and more sparse macroplankton were sampled . . . . . .

. . . . . .

FIGURE 3. TWO SAMPLES OF HEADINGS. Top example shows standard typewriter headings; bottom example shows headings prepared on composing equipment.

(3) Numbering System. Number headings and paragraphs only when the numbers are needed for clarity.

e. Reference Material.

(1) Appendixes. Start each appendix on a new page. When one or more appendixes are used, designate them Appendix A, Appendix B, etc. Each appendix shall be cited.

(2) Glossary of Terms. Define unusual technical terms where first introduced in the text. When many such terms are used, list them in alphabetical order with definitions in a glossary.

(3) References and Bibliography. Include complete identification of reference on bottom of page where first cited to aid in reading from microform. When references are numerous, they should be repeated in a reference list in the back of a report under "References. Arrange bibliographic entries not cited in the text but furnished as supplementary information under "Bibliography." Present entries in a uniform style which includes authors, titles, sources, identifying numbers, and dates.

(4) Index. When an index is considered essential, make it as complete as the nature of the report and its probable usuage requires.

f. Illustrations.

(1) General. Treat illustrations consistently throughout a report. Prepare them so that details and callouts (labels) will be clearly legible after final reproduction. Crop or mask photographs to eliminate insignificant detail. Do not add border frames to outline illustrations or use background tones in line drawings unless they contribute substantially to clarity. For reproducible copy, submit only clean tone or line art and only original photographs (or other types of tone art) rather than screened (halftone) reproductions.

(2) Placement. Locate illustrations near the first text reference made to them except in special situations, such as when a report contains only a few text pages and many illustrations. In such cases, place the illustrations in numerical sequence in the back of the report. It is preferable that illustrations be placed so that they may be viewed without turning the page sideways. If an illustration has to be placed sideways on a page, orient it so that the top of the illustration is at the left side of the page.

(3) Callouts (Labels). So far as practicable, place callouts horizontally, unboxed, and near the item called out, as shown in Figure 4. Make callouts consistent in size and typeface throughout a report. Use a typewriter or type size. Strive for high contrast and readability.

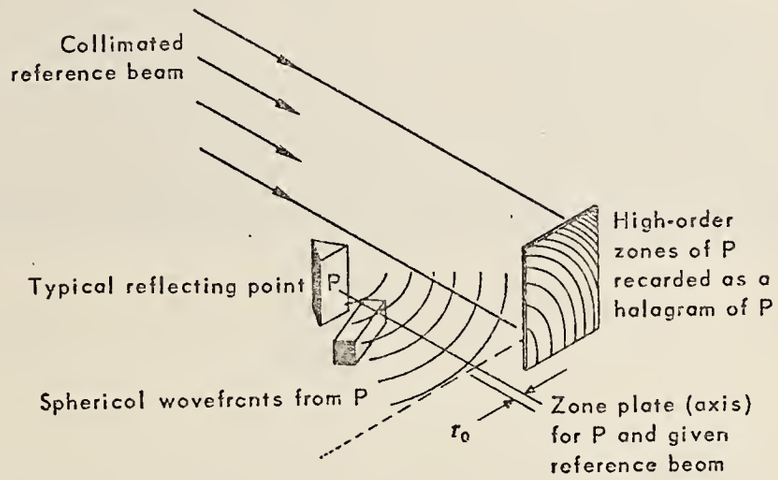

FIGURE 4. SAMPLE PLACEMENT OF CALLOUTS (LABELS)

(4) Color. Color must not be used unless specifically authorized by the sponsoring agency. Often screens, crosshatching, reverses, dots, or similar techniques can be used as effective substitutes for color (figure 5).

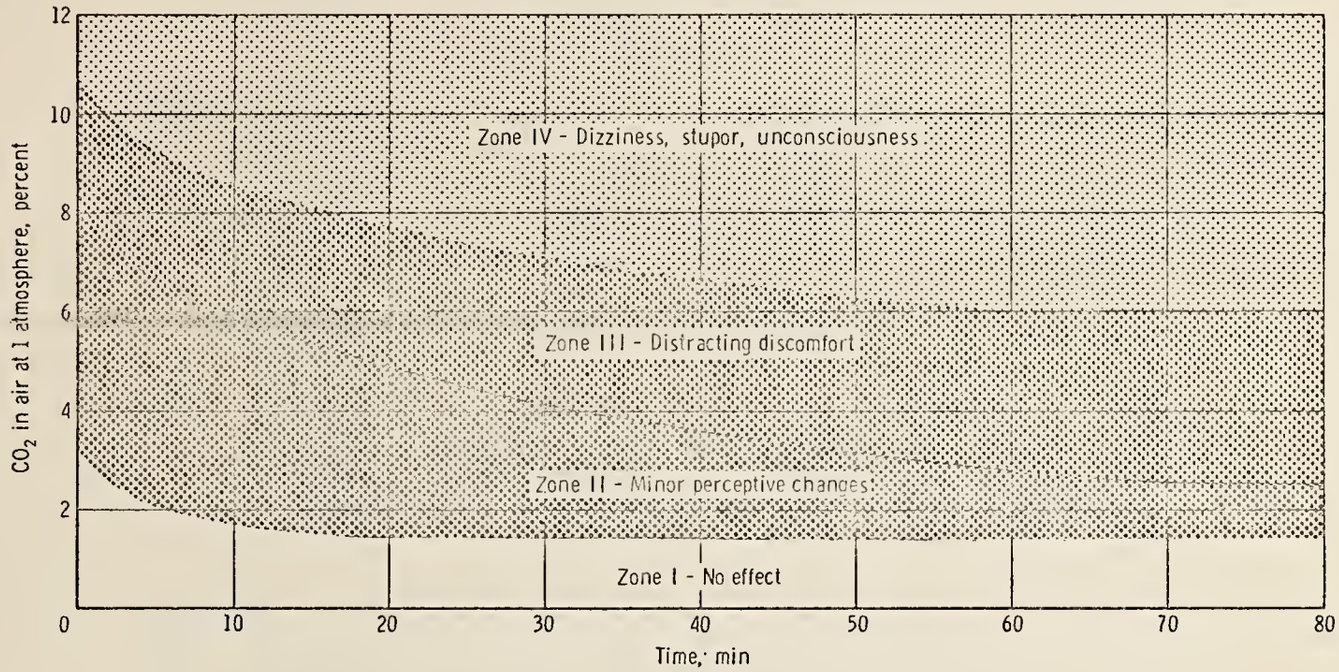

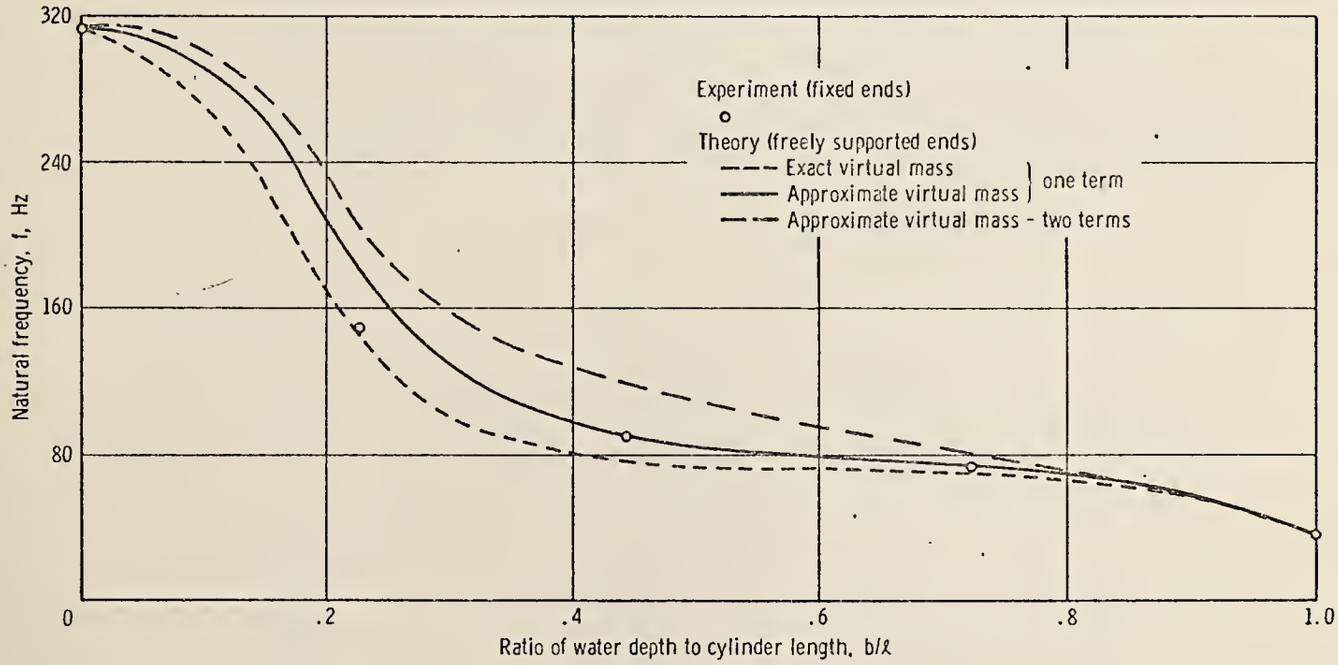

FIGURE 5. SAMPLE, SCREENING (TOP) AND CODING (BOTTOM) USED AS SUBSTITUTES FOR COLOR.

(5) Fold-ins. Wherever possible, avoid the use of oversize illustrations that must be folded. Often a large illustration can be divided to appear on facing pages. Make fold-ins or gate folds begin on a right-hand page.

(6) Numbering. Number illustrations to which reference is made in the text consecutively in Arabic numerals, preceded by the work "Figure," for example, Figure 1, Figure 2, or Figure 1-1, Figure 1-2, Figure 2-1, etc. Number illustrations within appendixes in a manner consistent with the appendix number, such as (Figure A-1, Figure B-2, etc.).

(7) Legends. Accompany each illustration, except for self-explanatory sketches, by a descriptive legend. The legend is ordinarily placed under the illustration and follows the figure number.

g. Tables.

(1) General. Tables should be as simple as possible so that the reader can easily grasp the meaning of the data. Use letters and numbers in tables that will be at least 6 point or higher in the final reproduced report. Prepare printout sheets from which electronically tabulated data are directly reproduced so that letters and numbers are sharp and unbroken. A sample table is shown in Figure 6.

TABLE 1.–SHORT-TIME XXXXXXXXXXXXXXXXXXXXXX ← *Caption*

Boxhead

Temperature, K	Specimen type (a)	Ultimate tensile strength, N/m^2	Elongation between buttonheads, cm	Reduction of area, percent
Footnote reference		Tungsten		
1700	1	2200×10^3	1.57	95
1900	1	1312	1.60	75
2060	1	987	.69	36
2260	1	674	.51	25

[a]Recrystallized at 2370 K for 1/2 hour in vacuum. ← *Footnote*

FIGURE 6. SAMPLE TYPICAL TABLE LAYOUT. For more complete information on tables, see the Government Printing Office Style Manual.

(2) Placement. Locate tables near the first text reference made to them, except in special situations, such as when a report contains only a few text pages and many tables. In such cases, place the tables in numerical sequence in the back of the report. It is preferable that tables be placed so that they may be viewed without turning the page sideways. If a table has to be located sideways on a page, orient it so that the top of the table is at the left side of the page

(3) Headings and Columns. Give applicable unit of measure or degree in the column headings of tables. Do not repeat in the columns. When tables continue on two or more pages, note the continuation and repeat the column headings and rules on each page.

(4) Numbering. Number tables to which reference is made in the text consecutively in Arabic numerals, preceded by the word "Table," for example, Table 1, Table 2, or Table 1-1, Table 1-2, Table 2-1, etc. Number tables within appendixes in a manner consistent with the Appendix number, such as "Table A-1, Table B-2", etc.

(5) Captions. Give each table, except short ones which run in with the text, a descriptive caption following the table number. Place caption above the table.

h. Equations.

(1) General. Prepare mathematical matter with extreme care. Use machine or transfer-type composition when available. Identify symbols after first use to aid in reading from microform or in a separate list. Make opening and closing parentheses, brackets, and braces the same height as the tallest expression they enclose. Separate numerator from the denominator with a line as long as the longer of the two. Center both numerator and denominator on the line.

(2) Placement. Indent or center a displayed equation in the line immediately following the first text reference made to it. Break equations before an equal, plus, or multiplication sign. Align a group of separate but related equations by the equal signs and indent or center the group as a whole. Short equations not part of a series may be placed in the text rather than displayed.

(3) Numbering. Number equations which are part of a series or which are referred to in the text consecutively in Arabic numerals; for example, (1), (2), or (1-1), (1-2), (2-1), etc. Enclose each number in parentheses at the right margin on the last line of the equation numbers. Number equations within appendixes in a manner consistent with the appendix number, such as (A-1), (B-2), etc.

i. Distribution. Do not include a distribution list in a published DOT report.

(1) Availability of Published Reports. Information resulting from DOT-sponsored R&D must receive proper dissemination throughout the DOT and the transportation community. Each sponsoring agency is to announce its published reports and their availability from the National Technical Information Service.

(2) Distribution of Published Reports. DOT sponsoring elements will establish a distribution list for each published report. As a minimum requirement such list shall specify 6 copies for the DOT Headquarters Library (TAD-491), and provide for adequate distribution within the DOT sponsoring agency and appropriate Departmental offices (for example, Transportation Systems Center, Cambridge, Massachusetts). When the report is to be made available to the public, the list shall specify at least 12 copies for the National Technical Information Service, Springfield, Virginia 22151.

(3) Distribution of Technical Report Documentation Pages. When the information needs of an addressee can be satisfied by copies of the completed Technical Report Documentation Page, consideration should be given to furnishing documentation pages in lieu of copies of published reports. DOT sponsoring agencies are to ensure that one copy of a completed documentation page of each accepted report, whether freely dissiminated or restricted from public distribution is forwarded to the DOT R&D Information Officer, TST-25.

i. Production.

(1) Composition.

(a) Type Size. Use a minimum 8-point type size or typewriter for the main text of the report.

(b) Typed Copy. Use black ribbon on opaque white paper to type reproducible copy.

(c) Line Spacing. Use single or 1½ spacing for reports prepared by typewriter for reproduction, except when extra spacing between lines is necessary to assure clarity of run-in equations, symbols, etc. Use 1½ or double-spacing for manuscripts.

(d) Margins. Use margins of at least 1 inch on all sides of text pages.

(e) Columns. Prepare text pages with a single column, not justified on the right margin, unless the sponsoring agency authorizes justification or use of more than one column.

(f) Page Numbering. Wherever practicable, number all pages throughout a report consecutively at the bottom with Arabic numerals. In special cases, number by section or chapter (1-1, 1-2, 2-1, etc,). Odd-numbered pages are right-hand pages and even-numbered pages are left-hand pages.

k. Limitation on Printing. Contractors shall not become prime sources of printing for agencies unless so authorized by the Joint Committee on Printing. See paragraphs 37 and 38, Government Printing and Binding Regulations (listed in paragraph "References"). Duplicating (not printing) shall conform to paragraph 2 of these Regulations. Printing shall not be a preplanned contractual requirement. Contractors shall furnish one reproducible copy of the final approved report within the time specified in the contract. Only clean tone or line art and original photographs and text suitable for camera copy for offset printing shall be submitted.

l. Workmanship. Filled-in or broken letters, illegible text or illustrations (including lettering), or similar imperfections are not acceptable. Only reproduced reports that will be legible in microform are acceptable.

m. Cover Size, Stock, and Ink. Reproduced reports may have separate covers or self covers cut to page size. Use 110-pound index (Government Specification JCP K10) 50-pound antique (JCP L20) 44-pound white ledger (JCP J10) or similar commercial weight paper for separate covers. Use black ink for self covers. Do not use covers with windows.

n. Page Size, Stock, and Ink. Reproduced reports shall be approximately 8 by 10½ inches or 8½ by 11 inches in size. Use black ink on opaque white paper. Use both sides of of the sheet to the maximum extent practicable.

o. Binding. Use side-stitching, saddle-stitching, or glue-back binding. Other types of binding require the approval of the sponsoring agency.

p. Decorative Features and Advertising. Do not use advertising display on pages.

9. REVIEW AND ACCEPTANCE. To ensure that DOT technical reports conform to the established standards of format and distribution and to protect the Government interest against possible litigation, all reports shall be reviewed and accepted as follows:

a. Review. Types of reports to be reviewed and criteria for the review will be according to the provisions of the individual work agreements (contract, project plan agreement, grant, etc.). Within 30 days after completion of the technical work related to a contract, grant, or project phase, the performing organization shall submit advance draft copies of the report with a letter of transmittal to the concerned element of the DOT sponsoring organization for review and approval. Such review is for the purpose of assuring that the report is in compliance with the project assignment or contract and in conformity with the format guidelines established by this order.

b. Approval. Approval or critique of reports prepared by DOT elements will be provided performing organizations in writing by the DOT sponsoring organization concerned, within 60 days of receipt of draft copies. For contractor prepared reports, approval will be provided in writing by the contracting officer concerned.

c. Resolution of Conflicts. In the event of a conflict which cannot be resolved between the performer and the sponsoring organization, the matter will be referred to TST-42 for resolution.

d. Waiver of Approval Authority. In cases where the sponsoring organization waives its review and approval authority, such waiver shall be specified in the agreement documentation.

DOT-TST-72-1

Attachment

Technical Report Documentation Page

1. Report No.	2. Government Accession No.	3. Recipient's Catalog No.
4. Title and Subtitle		5. Report Date
		6. Performing Organization Code
7. Author(s)		8. Performing Organization Report No.
9. Performing Organization Name and Address		10. Work Unit No. (TRAIS)
		11. Contract or Grant No.
12. Sponsoring Agency Name and Address		13. Type of Report and Period Covered
		14. Sponsoring Agency Code

15. Supplementary Notes

16. Abstract

17. Key Words	18. Distribution Statement

19. Security Classif. (of this report)	20. Security Classif. (of this page)	21. No. of Pages	22. Price

Form DOT F 1700.7

DEPARTMENT OF TRANSPORTATION

RECORD OF COORDINATION AND APPROVAL

CHECK ONE: [X] ORDER [ ] NOTICE [ ] PAGE CHANGE [ ] OTHER

IDENTIFICATION NO. DOT 1700.18A

SUBJECT: Publication and Distribution of Department of Transportation Scientific and Technical Reports

PERSON TO CONTACT ON ATTACHED

NAME	OFFICE	PHONE
J. F. McKeel	TAD-232	64738

EXPLANATION

This order would establish Department of Transportation policy for the acquisition, format, and distribution of technical reports resulting from DOT funded research and development projects and replace the December 1968 COSATI Guidelines with March 1972 TST guidelines.

Concurrence will be assumed if no response is received by the deadline date for coordination.

ORIGINATING OFFICE CLEARANCE

TITLE	SIGNATURE	DATE	DEADLINE DATE FOR COORDINATION
Director of Management Systems	[signature]	APR 26 1972	May 12, 1972

COORDINATION ROUTING

OFFICE/OFFICIAL	SIGNATURE	DATE	CONCUR NO COMMENT	CONCUR COMMENT	NON-CONCUR	COMMENT ADOPTED
Dep Under Secretary	Received					
Asst Sec for Policy & Int'l Affairs	MAY 3 1972					
Asst Sec for Env & Urban Systems	UMTA					
Asst Sec for Sys Development & Tech (info)						
Asst Sec for Safety & Consumer Affairs						
General Counsel						
Exec Sec (info)						
Commandant, USCG						
Administrator, FAA						
Administrator, FHWA						
Administrator, FRA						
Administrator, NHTSA						
Administrator, UMTA						
Administrator, SLSDC						
Gen Manager, NTSB						
DIRECTIVES CONTROL POINT CLEARANCE						
APPROVED (TITLE)	Should be finalized 9/30					

Phil: please review & have comments to me by 5/11

looks OK but check with LCA

OK

Approved

AFTER CLEARANCE, REPORT TO: [ ] DOT DIRECTIVES CONTROL POINT [ ] DIRECTIVES CONTROL POINT

FORM DOT F 1300.3 (1-67)

Department of Transportation
Office of the Secretary
Washington, D.C.

ORDER

DOT 1700.18A

DRAFT
4-19-72

SUBJECT: PUBLICATION AND DISTRIBUTION OF DEPARTMENT OF TRANSPORTATION SCIENTIFIC AND TECHNICAL REPORTS

1. PURPOSE. This order establishes Department of Transportation (DOT) policy for the acquisition, format, and distribution of technical reports resulting from DOT-funded research and development (R&D) projects.

2. CANCELLATION. DOT 1700.18, FORMAT FOR SCIENTIFIC AND TECHNICAL REPORTS, of 7-25-69.

3. SCOPE. This order applies to interim and final technical reports prepared by and for the Office of the Secretary (OST), and all operating administrations. In addition, pursuant to delegation by the National Transportation Safety Board (NTSB) under Section 5(m) of the Department of Transportation (DOT) Act, this order is applicable as a general guideline to NTSB. Excluded are NTSB accident reports and studies, non-technical studies, letter reports, technical or training manuals, catalogs, administrative or fiscal reports or journal article manuscripts, preprints or reprints submitted as technical reports. However, if such documents are distributed to the National Technical Information Service (NTIS), Springfield, Virginia 22151, a Technical Report Documentation Page (DOT F 1700.7) must be a part of each copy.

4. REFERENCE. DOT document, DOT-TST-72-1, "Format and Distribution Requirements for DOT Scientific and Technical Reports" of March 1972.

5. BACKGROUND. This order and the referenced DOT document are a product of the 1971 recommendations of the DOT Task Force on Technical Reports. The Task Force, convened to review the soundness and adequacy of order DOT 1700.18 (now cancelled), found that National interest dictates that all scientific and technical reports produced by the agencies of the United States Government shall be appropriately organized and available at a reasonable cost to the U.S. technological community. To this end, the Federal Council for Science and Technology (FCST) and its Committee on Scientific and Technical Information (COSATI) established certain policies concerning the payment of journal publication fees and the handling

DISTRIBUTION: All Secretarial Offices
All Operating Administrations
National Transportation Safety Board

OPI: Office of R&D Plans and Resources

of technical reports by the agencies of the U. S. Government. Additionally, COSATI issued 'Guidelines to Format Standards for Scientific and Technical Reports Prepared by or for the Federal Government" and recommended their adoption by the executive agencies as part of their agency-wide reporting specifications. Using the Guidelines as a base, the Assistant Secretary for Systems Development and Technology established a Department-wide standard and issued it as DOT document DOT-TST-72-1, 'Format and Distribution Requirements for DOT Scientific and Technical Reports." This document is intended to aid in the interchange of scientific and technical data and in reducing the costs of preparing, storing, and retrieving scientific and technical documentation.

6. RESPONSIBILITIES.

a. The Assistant Secretary for Systems Development and Technology is responsible for the guidance and surveillance of the implementation of this order and for coordination of supplemental instructions issued by the operating administrations. Additionally, he will be responsible for providing the central point of control for R&D reports prepared by and for the Secretarial Offices.

b. Other Secretarial Offices and operating administrations are responsible for establishment of specific points of control for their technical reports, for the implementation of this order, and for establishment of internal procedures for review, acceptance, or non-acceptance of technical reports prepared by their organizations, contractors, grantees, and other recipients of R&D funds. Additionally, they are responsible for forwarding one copy of the mandatory Technical Report Documentation Page (DOT F 1700.7) to the Office of the Assistant Secretary for Systems Development and Technology, TST-25, for entry into the Transportation Research Activities Information System (TRAIS). Contracting officers issuing R&D contracts, grants, and inter-agency agreements are responsible for incorporating in each such agreement the following clause:

> 'Interim and final technical reports resulting from this agreement shall be prepared and distributed in accordance with the specifications of DOT-TST-72-1, 'Format and Distribution Requirements for DOT Scientific and Technical Reports.' Copies of this requirement

document may be obtained from the National Technical Information Service, Springfield, Virginia, 22151, by ordering document number PB _____." Price: $3.00 paper copy; $ .95 microfiche copy.

c. All DOT organizations that conduct or sponsor R&D are responsible for budgeting and paying for the costs of the subsequent dissemination of technical results. Included is the responsibility of paying journal publication fees, if such publications meet all of the following criteria:

(1) The work was supported by DOT R&D contract, grant, or interagency agreement.

(2) The article is accepted by the DOT technical project monitor as a valid technical report, to be deposited at the NTIS and distributed by them to any requesting Government agencies or its R&D contractor.

(3) The journal involved is not published for profit.

(4) The charges are levied impartially on all research papers published by the journal, whether by non-Government or Government authors.

(5) The journal article carries a notation acknowledging DOT sponsorship of the work.

7. DOCUMENT AVAILABILITY. DOT-TST-72-1 is available from the DOT Distribution Operations Unit, TAD 484.3, for DOT agencies and contracting officers only. Contractors and grantees should order DOT-TST-72-1 from the National Technical Information Service, Springfield, Virginia 22151.

8. IMPLEMENTING INSTRUCTIONS.

a. Operating administrations, TSC and the NTSB shall, within 60 days from the date of this order, prepare internal supplemental instructions for the expeditious implementation of this order. Internal instructions shall include processing procedures for review, acceptance, and non-acceptance of reports prepared

by contractors, grantees, operating administrations, TSC and other Governmental agencies. Special reporting instructions not covered in DOT-TST-72-1 or the supplemental instructions shall be included in the appropriate agreement documentation.

b. Operating administration's supplemental instructions shall be coordinated with the Office of the Assistant Secretary for Systems Development and Technology, R&D Information Officer, TST-25.

DOT-TST-72-1

FORMAT AND DISTRIBUTION REQUIREMENTS FOR DOT SCIENTIFIC AND TECHNICAL REPORTS

MARCH 1972

Office of Assistant Secretary for
Systems Development and Technology
Department of Transportation
Washington, D.C. 20590

DOT-TST-72-1
March 1972

FORMAT AND DISTRIBUTION REQUIREMENTS FOR DOT SCIENTIFIC AND TECHNICAL REPORTS

TABLE OF CONTENTS PAGE

FORMAT AND DISTRIBUTION REQUIREMENTS FOR DOT SCIENTIFIC AND TECHNICAL REPORTS

1. PURPOSE. This document establishes format and distribution requirements for scientific and technical reports prepared by or for the Department of Transportation. Purposes of this document are to aid in the interchange of scientific and technical information and to reduce the costs of preparing, storing, retrieving, reproducing, and distributing scientific and technical reports.

2. FORMS OF REPORTS. This document applies to reports furnished in the following forms:

Manuscript:	Text and illustrations assembled for review and editing.
Reproducible copy:	Text and illustrations ready for reproduction.
Reproduced copy:	Reports duplicated or printed for distribution; also referred to as paper copy (PC).
Microform:	Reports produced in miniature on on film (MF).

3. EXCLUDED DOCUMENTS. This document does not apply to NTSB accident reports and studies, special reports, staff studies, letter reports, technical or training manuals, catalogs, administrative or fiscal reports, or journal article manuscripts, preprints or reprints submitted as technical reports. However, if such documents are distributed to the National Technical Information Service, Springfield, Virginia, 22151, the Technical Report Documentation Page must be a part of each copy.

4. REFERENCES.

Federal Council for Science and Technology, Committee on Scientific and Technical Information. Guidelines to Format Standards for Scientific and Technical Reports Prepared by or for the Federal Government, PB 180 600, December 1968; Federal Microfiche Standards, PB 167 630, August 1965; and Standard for Descriptive Cataloging of Government Scientific and Technical Reports, PB 173 314, October 1966. Available from National Technical Information Service, Springfield, Virginia, 22151. Price: $3:00 each paper copy. $.95 microfiche per copy.

U.S. Congress Joint Committee on Printing. Current Government Printing and Binding Regulations. Available from the Joint Committee on Printing, U.S. Congress, Committee Room S-151 U.S. Capitol, Washington, D. C. 20510.

U.S. Government Printing Office. Style Manual (latest edition). Available from the Superintendent of Documents, U.S. Government Printing Office, Washington, D.C. 20402. Price: $3.00 (1967 edition).

Department of Defense/Engineers Joint Council. Thesaurus of Engineering and Scientific Terms, 1967, Engineers Joint Council, 345 East 47th Street, N.Y., N.Y. 10017. Price: $19.50.

Other references shall be as specified by the sponsoring agency.

5. DEFINITIONS.

a. Sponsoring Agency. The organizational element having program responsibility for scientific or technical effort. A public body (state, city, commission, etc.) also may be a sponsoring agency in cooperation with a DOT operating administration.

b. Performing Organization. The DOT element (either Headquarters, field or laboratory) contractor, grantee or recipient of DOT R&D funds reporting specific scientific or technical research findings resulting from investigations, tests or experiments.

c. Interim Report. An Interim Report is issued during the course of a project etc., or a major part thereof, to reflect completion of a specific phase of a project assignment, etc. This method of reporting also can be used where periodic report of progress is of vital interest to the transportation community at large. Interim reporting, for example, can be the communications medium for early reporting under a project etc., of considerable duration or relative complexity.

d. Final Report. A Final Report is issued at the completion of a project, or a major portion thereof, to signify the accomplishment and formal "close-out" of a project assignment, etc.

e. Transportation Research Activity Information Service (TRAIS). TRAIS is an R&D management information system in the Office of the Secretary of Transportation.

6. REQUIREMENTS. Scientific and technical reports shall conform to the requirements of DOT-TST-72-1, the references cited in (4) above, security regulations and further specifications of the sponsoring agency.

7. LEGAL CONSIDERATIONS. The Government may be subject to liability for misuse of the literary or intellectual property (patents, trademarks, "proprietary information") of others. To ensure that technical reports can receive the widest possible dissemination, report writers and editors should observe the following guidelines:

a. Copyright. No copyrighted material may be incorporated in a report unless written permission of the copyright owner has been obtained. Prior use of copyrighted material in another Government publication does not necessarily constitute permission to use it in a DOT publication. Where permission has been obtained and the material is used in a report, it shall be identified by a statement substantially as follows:

> "Reprinted from (title of publication) by (name of author) by permission of (name of copyright owner). Year of first publication_____."

Courtesy requires that acknowledgment or credit be given (by footnote, bibliographic reference, or a statement in the text) for the use of the material contributed or assistance rendered by someone else though no copyright notice is involved.

Unpublished work may be protected under common law or equity even though there is no copyright notice. Problems relating to the protection given to unpublished work will be referred to the Office of the General Counsel.

b. Privately Owned Information. To avoid restriction on availability of reports, every effort should be made to avoid the use of proprietary information accepted by the Government for limited purposes. Such proprietary information will be used only if it is essential to the understanding of a report and only after approval by the Office of the General Counsel. Reports containing such proprietary information will bear a statement restricting availability and handling, as required. (Paragraph 7.b.(9)DOT Order 1700.18)

c. Data Use Restriction. In the event that the Contractor furnishes any information or data which the Contractor considers to be proprietary, the Contractor shall affix the following use restriction legend to such proprietary data, shall mark such data with the number of the prime contract, and subcontract, if applicable; and shall deliver such proprietary data directly to the Government. No other legend is authorized and the Government will thereafter treat the data in accordance with such legend.

"DATA USE RESTRICTION"

This data, furnished under U.S. Government Contract No._____, may be duplicated and used by the Government with the express limitations that the data may not be disclosed outside the Government, nor be used for purposes of manufacture, without prior permission of the contractor. These restrictions do not limit the Government's rights to use or disclose any data obtained from another source without restriction. This legend shall be marked on any reproduction of this data in whole or in part."

d. Trademarks. The term "trademark" includes any word name, symbol, device or any combination thereof, adopted and used by a manufacturer or merchant to identify his goods and distinguish them from those manufactured or sold by others. It is improper to use a "trademark" to identify goods not manufactured or sold by the owner of a trademark or his licensee. In general the use of trademarks is discouraged. Where feasible, goods should be identified by a type designation or a structural feature that distinguishes them from other goods.

e. Trade Names and Manufacturers' Names. Under Section 522 of Title 5, United Stes Code, as implemented by DOT Regulation, Part 7, Public Availability of Information, effective 4 July 1967, reports, which once were not available to the public, may be obtained by anyone who wants them. Particularly to be avoided is the appearance of endorsing or favoring a commercial product, commodity, or servicee. Therefore, unless the report will not contain meaningful information without them, trade names or the names of manufacturers will not be given.

The use of trade names or manufacturers' names in a report will be specifically brought to the attention of the reviewing office before the report is approved. Such reports shall contain the following notice on the inside front cover (no border required):

> NOTICE
>
> The United States overnment does not endorse products or manufacturers. Trade or manufacturers' names appear herein solely because they are considered essential to the object of this report. Use of this report in any manner whatsoever for advertising purposes is prohibited.

8. FORMAT.

a. Order of Elements. When some or all of the following elements are appropriate for a report, they will be included and the standard order will be as follows:

Front Cover

Front matter	Special Notices Technical Report Documentation Pag Preface Table of contents List of illustrations List of tables List of abbreviations and symbols
Body of report	Introduction Main text Conclusions Recommendations
Reference material	Appendixes Glossary of terms References Bibliography Index

Back Cover

GROUP I

Report No. CG-724104.004

DOT-TST-72-1
March 1972

GROUP II

Title

REMOTE SENSING OF OIL SLICKS

Subtitle (if any)

Author(s)

John R. Doe

Performing organization name and address

ABC Laboratories, Inc.
465 Main Street
Zedburg, Tenn. 37000

DOT insignia

Date

MARCH 1972

Type of report

FINAL REPORT

Distribution statement

Document is available to the public through the National Technical Information Service, Springfield, Virginia 22151.

GROUP III

Operating DOT administration DOT headquarters element and address

Prepared for
DEPARTMENT OF TRANSPORTATION
UNITED STATES COAST GUARD
Office of Research and Development
Washington, D.C. 20590

Figure 1. Sample Front Cover

b. Front Cover.

(1) Outside Front Cover. Either self covers (of the same paper as the text) or separate covers (of different paper than the text) are required for all reports except those furnished in manuscript form. Include on the cover the information shown in the following groupings, plus special markings (such as security classification and distribution limitations) specified by the sponsoring agency. Group related items as shown in Figure 1.

(2) Report Number. Each report shall carry a unique alphanumeric designation provided by the sponsoring agency (for example, CG-714104.004; FAA-RD-72-1; or FHWA-PA-D-72 for state-sponsored report in cooperation with DOT operating administration). If none has been assigned, use an alphanumeric designation established by the performing organization (for example, TSC-SA-72-2, MIT-R-71-8737-1); or an alphanumeric designation derived from the contract or grant number (for example, FA71WA-8737-1). Performing agency numbers are also authorized.

(3) Title and Subtitle. Display the title prominently and make it indicate clearly and briefly the subject of the report. Set subtitle, if used, in smaller type or otherwise subordinate it to the main title. When a report is prepared in more than one volume, repeat the primary title and have subtitle identify that specific volume; for example, Volume I, Volume I

(4) Author(s). Place the author's name on the front cove only if the report was written by him to describe specific or technical research findings resulting from investigation, tests, or experiments which he conducted. If a name is placed on the backstrip (spine) of a report, the Government Printing and Binding Regulations require that it not be placed on the front cover. In any case, the author's name shall be subordinated in appropriately smaller type than the title. Give the name(s) of the author(s) in conventional order (for example, John R. Doe, or if author prefers, J. Robert Doe).

(5) Performing Organization Name and Address. Give name, street, city, state, and zip code. List no more than two levels of an organizational hierarchy.

(6) DOT Insignia. Place the DOT insignia on all reports as shown in Figure 1. In cases where a public body (state, city, commission, university, etc.) is a sponsoring agency, the DOT insignia may be deleted and appropriate public body substitution made.

(7) Date. Each report shall carry a date. The sponsoring agency may specify the basis for dating. If it does not, the author will provide a date and indicate the basis on which it was selected (for example, date of issue, date of approval, date of preparation, etc.).

(8) Type of Report and Period Covered. Indicate interim, final, etc., and if applicable, dates covered.

(9) Distribution Statement. Each DOT sponsoring agency shall assign a distribution statement, which is placed on the front cover and printed on all copies. The statement that appears on the cover must also appear in Block 18 of the Technical Report Documentation Page. Use one of the following as appropriate:

(a) Document is available to the public through the National Technical Information Service, Springfield, Virginia 22151.

(b) Approved for U.S. Government only. This document is exempted from public availability because (fill in reason). Transmittal of this document outside the U.S. Government must have prior approval of the (fill in DOT sponsoring agency).

(c) Approved for (fill in DOT sponsoring agency) only. This document is exempted from public availability because (fill in reason). Transmittal of this document outside the (fill in sponsoring agency) Department of Transportation must have prior approval of the (fill in responsible office).

(10) Sponsoring Agency's Name and Address. Give name, city, state, and zip code. When a public body (state, city, commission, university, etc.) is a sponsoring agency in cooperation with the DOT, grouping will reflect this cooperation, such as:

Prepared for
DEPARTMENT OF HIGHWAYS
Atlanta, GA 30334

in cooperation with
(DOT OPERATING ADMINISTRATION,
Headquarters element, address)

(11) Inside Front Cover. Special notices, such as reproduction, safety precautions, sponsor's disclaimers, and statements of compliance with special regulations are placed on the inside front cover as required by the sponsoring agency. Place the following notice on the inside front cover of all DOT reports (no border required).

NOTICE

This document is disseminated under the sponsorship of the Department of Transportation in the interest of information exchange. The United States Government assumes no liability for its contents or use thereof.

c. Front Matter.

(1) Technical Report Documentation Page. Include one completed Technical Report Documentation Page as the first right-hand page after the cover in each report. A model completed page is shown in Figure 2A, with instructions for completing the form given in Figure 2B. Attachment 1 is a reproducible blank form of the documentation page for the author's use. Adequate and accurate completion of this page will assist documentation of a report. This documentation page also may be distributed in lieu of copies of the published report. This form is available from DOT Distribution Operations Unit, TAD 484.3, for DOT agencies and from the Contracting Officers of the sponsoring agencies for contractors and grantees. Local reproduction is authorized.

Technical Report Documentation Page

1. Report No. OST-ONA-71-1, V	2. Government Accession No.	3. Recipient's Catalog No.
4. Title and Subtitle A STUDY OF THE MAGNITUDE OF TRANSPORATION NOISE GENERATION AND POTENTIAL ABATEMENT Volume V - Train System Noise		5. Report Date November 1971
		6. Performing Organization Code
		8. Performing Organization Report No.
7. Author(s) Joseph A. Rock, C. Thomas Paine		
9. Performing Organization Name and Address Serendipity, Incorporated Eastern Operations Division Suite 701, 2001 Jefferson Davis Hwy. Arlington, Virginia 22202		10. Work Unit No. (TRAIS) 1224-611
		11. Contract or Grant No. DOT-OS-A9-018
12. Sponsoring Agency Name and Address Department of Transportation Office of the Secretary Office of Noise Abatement Washington, D. C. 20590		13. Type of Report and Period Covered Final Report
		14. Sponsoring Agency Code
15. Supplementary Notes		

16. Abstract

The noise from an individual vehicle is a function of the physical characteristics of the vehicle, the way in which the vehicle is operated and the construction characteristics of the vehicle's guideway, e.g., rail condition, roadbed supporting structure. Noise reduction at the source can be obtained by altering the vehicle and/or the guideway and by changing the way the vehicle is operated.

Analysis of contemporary mass transit vehicle noise indicates that the rank order of conventional rail vehicle noise sources is: (1) wheel and rail system, (2) propulsion system and (3) auxiliary equipment.

Noise levels alongside the right-of-way, are a function of the vehicle type, its operation and the configuration of the roadbed and surrounding areas.

For a given vehicle and guideway, the right-of-way configuration has the greatest impact on the sound levels received at a specific wayside location. Rail vehicle wayside noise levels can be reduced by interrupting the sound transmission paths between the vehicle and the receiver. To the extent that this is achieved, rail vehicle wayside noise levels can be reduced in a manner which is similar to that used for highway noise reduction.

17. Key words noise, transportation noise, rail vehicle noise, surface transportation, mass transit		18. Distribution Statement Document is available to the public through the National Technical Information Service, Springfield, Virginia 22151.	
19. Security Classif. (of this report) UNCLASSIFIED	20. Security Classif. (of this page) UNCLASSIFIED	21. No. of Pages 115	22. Price $3.00 PC .95 MF

Form DOT F 1700.7 Reproduction of this page is authorized

FIGURE 2A. SAMPLE, COMPLETED TECHNICAL REPORT DOCUMENTATION PAGE.

INSTRUCTIONS FOR COMPLETING TECHNICAL REPORT DOCUMENTATION PAGE

Make items 1, 4, 5, 7, 9, 12, and 13 agree with the corresponding information on the report cover. Use all capital letters for main title (item 4). Leave items 2, 6, and 14 blank. Complete the remaining items as follows:

3. Recipient's Catalog No. Reserve for use by report recipients.

8. Performing Organization Report No. Insert if performing organization wishes to assign this number.

10. Work Unit No. (TRAIS). Use the number code from the applicable research and technology resume which uniquely identifies the work unit in the Transportation Research Activity Information Service. For Highway Planning and Research (HP&R Program) reports, include the State project number.

11. Contract or Grant No. Insert the number of the contract or grant under which the report was prepared. For Highway Planning and Research (HP&R Program) reports, include also the State study number.

15. Supplementary Notes. Enter information not included elsewhere but useful, such as: Prepared in cooperation with...Translation of (or by)...Presented at conference of...To be published in...

16. Abstract. Include a brief (not to exceed 200 words) factual summary of the most significant information contained in the report. An abstract should state the purpose, methods, results, and conclusions of the work effort. For the purpose, include a statement of goals (objectives, aims). For methods, include experimental techniques or the means by which the results were obtained. Results (findings) are the most important part of the abstract and selection should be based on one, or several of the following: new and verified events, findings of permanent value, significant findings which contradict previous theories, or findings which the author knows are relevant to a practical problem. Conclusions should deal with the implications of the findings and [illegible] fields. Do not repeat title or other items provided on this page. When a report consists of a number of volumes, include the title of each of the other volumes in each abstract.

17. Key Words. Select terms or short phrases that identify the principal subjects covered in the report, and are of sufficiently specific and precise to be used as index entries for cataloging. The sponsoring agency may specify that the key words shall conform to standard terminology, such as that given in the Department of Defense/Engineers Joint Council Thesaurus of Engineering and Scientific Terms, or a Thesaurus of Terms established by the sponsoring agency.

18. Distribution Statement. Enter one of the authorized statements (Paragraph 8b(1)(b)7) used to denote releasability to the public or a limitation on dissemination for reasons other than security of defense information. Refer questions on the statements to the sponsoring agency.

19. Security Classification (of report). NOTE: Reports carrying a security classification will require additional markings giving security and downgrading information as specified by the sponsoring agency.

20. Security Classification (of this page). NOTE: Because this page may be used in preparing announcements, bibliographies, and data banks, it should be unclassified, if possible. If a classification is required, identify the classified items on the page by an appropriate symbol.

21. No. of Pages. Insert the number of pages.

22. Price. Insert the price (paper copy and microfiche copy) set by the National Technical Information Service or the Government Printing Office, if known.

FIGURE 2B. INSTRUCTIONS FOR COMPLETING TECHNICAL REPORT DOCUMENTATION PAGE.

(2) Preface. Among possible uses, a preface may show the relation of the work reported on to associated efforts, give credit for the use of copyrighted material, and acknowledge significant assistance received.

(3) Table of Contents. In the table of contents (not suggested for a report of less than 10 pages), list principal headings as they appear in the report with the page numbers on which the headings occur. Do not list items from the front matter. Start the table of contents on a new right-hand page.

(4) List of Illustrations. Furnish a list of illustrations only if it is considered essential. List figure number, legend, and page number of each illustration. Abbreviate lengthy legends.

(5) List of Tables. Furnish a list of tables only if it is considered essential. List table number, caption, and page number of each table. Abbreviate lengthy captions.

(6) List of Abbreviations and Symbols. Define symbols and abbreviations where first introduced in the text. When symbols and abbreviations are numerous, furnish a separate list with definitions.

d. Body of Report.

(1) General. The contents and organization of the body of a report shall be determined by the nature of the work. Start the first section on a new page. This section usually provides background information and work objectives. Succeeding sections describe work procedures, apparatus involved, tests performed, results achieved, and related matters, as appropriate. The terminal sections usually present conclusions and recommendations.

(2) Headings. Headings shall stand out from the text with their relative importance apparent. Typical heading styles are illustrated in Figure 3.

METHODS ——— *First-order head*

Macroplankton ——— *Second-order head*

Third-order head

Sampling—The larger and more sparse macroplankton were sampled . . . . .

. . . . . .

METHODS ——— *First-order head*

Macroplankton ——— *Second-order head*

SAMPLING ——— *Third-order head*

The larger and more sparse macroplankton were sampled . . . . . .

. . . . . .

FIGURE 3. TWO SAMPLES OF HEADINGS. Top example shows standard typewriter headings; bottom example shows headings prepared on composing equipment.

(3) Numbering System. Number headings and paragraphs only when the numbers are needed for clarity.

e. Reference Material.

(1) Appendixes. Start each appendix on a new page. When one or more appendixes are used, designate them Appendix A, Appendix B, etc. Each appendix shall be cited.

(2) Glossary of Terms. Define unusual technical terms where first introduced in the text. When many such terms are used, list them in alphabetical order with definitions in a glossary.

(3) References and Bibliography. Include complete identification of reference on bottom of page where first cited to aid in reading from microform. When references are numerous, they should be repeated in a reference list in the back of a report under "References. Arrange bibliographic entries not cited in the text but furnished as supplementary information under "Bibliography." Present entries in a uniform style which includes authors, titles, sources, identifying numbers, and dates.

(4) Index. When an index is considered essential, make it as complete as the nature of the report and its probable usage requires.

f. Illustrations.

(1) General. Treat illustrations consistently throughout a report. Prepare them so that details and callouts (labels) will be clearly legible after final reproduction. Crop or mask photographs to eliminate insignificant detail. Do not add border frames to outline illustrations or use background tones in line drawings unless they contribute substantially to clarity. For reproducible copy, submit only clean tone or line art and only original photographs (or other types of tone art) rather than screened (halftone) reproductions.

(2) Placement. Locate illustrations near the first text reference made to them except in special situations, such as when a report contains only a few text pages and many illustrations. In such cases, place the illustrations in numerical sequence in the back of the report. It is preferable that illustrations be placed so that they may be viewed without turning the page sideways. If an illustration has to be placed sideways on a page, orient it so that the top of the illustration is at the left side of the page.

(3) Callouts (Labels). So far as practicable, place callouts horizontally, unboxed, and near the item called out, as shown in Figure 4. Make callouts consistent in size and typeface throughout a report. Use a typewriter or type size. Strive for high contrast and readability.

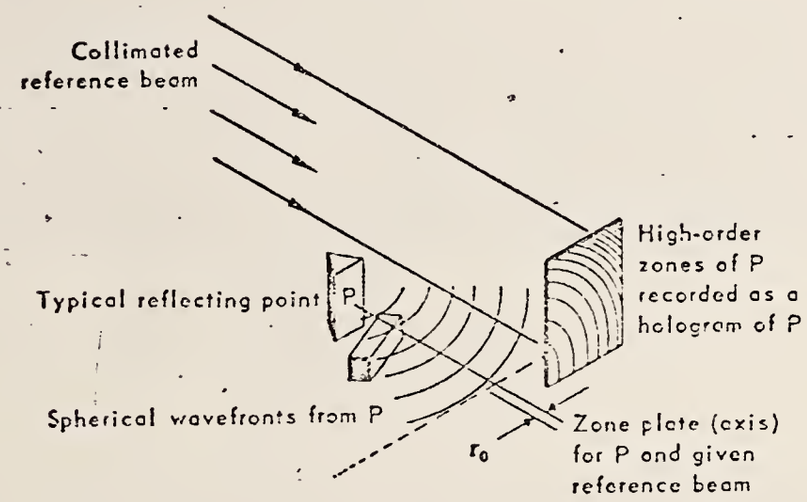

FIGURE 4. SAMPLE PLACEMENT OF CALLOUTS (LABELS)

(4) Color. Color must not be used unless specifically authorized by the sponsoring agency. Often screens, crosshatching, reverses, dots, or similar techniques can be used as effective substitutes for color (figure 5).

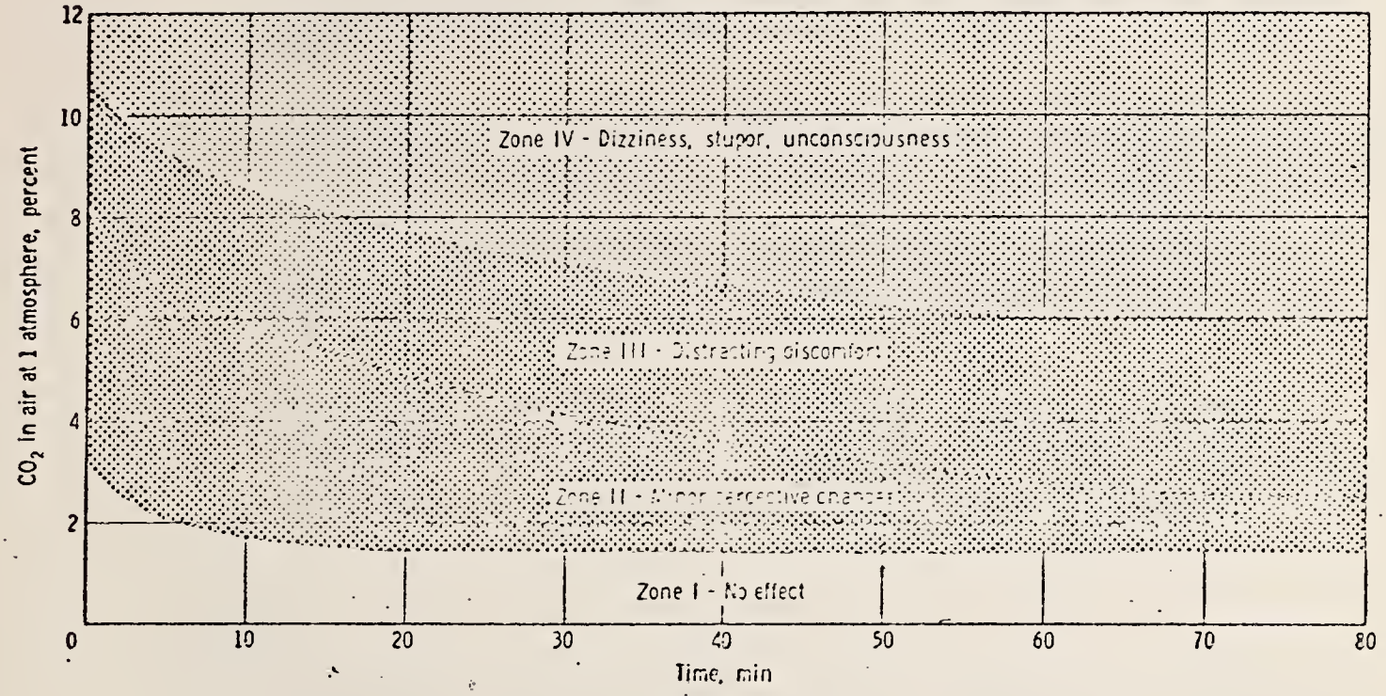

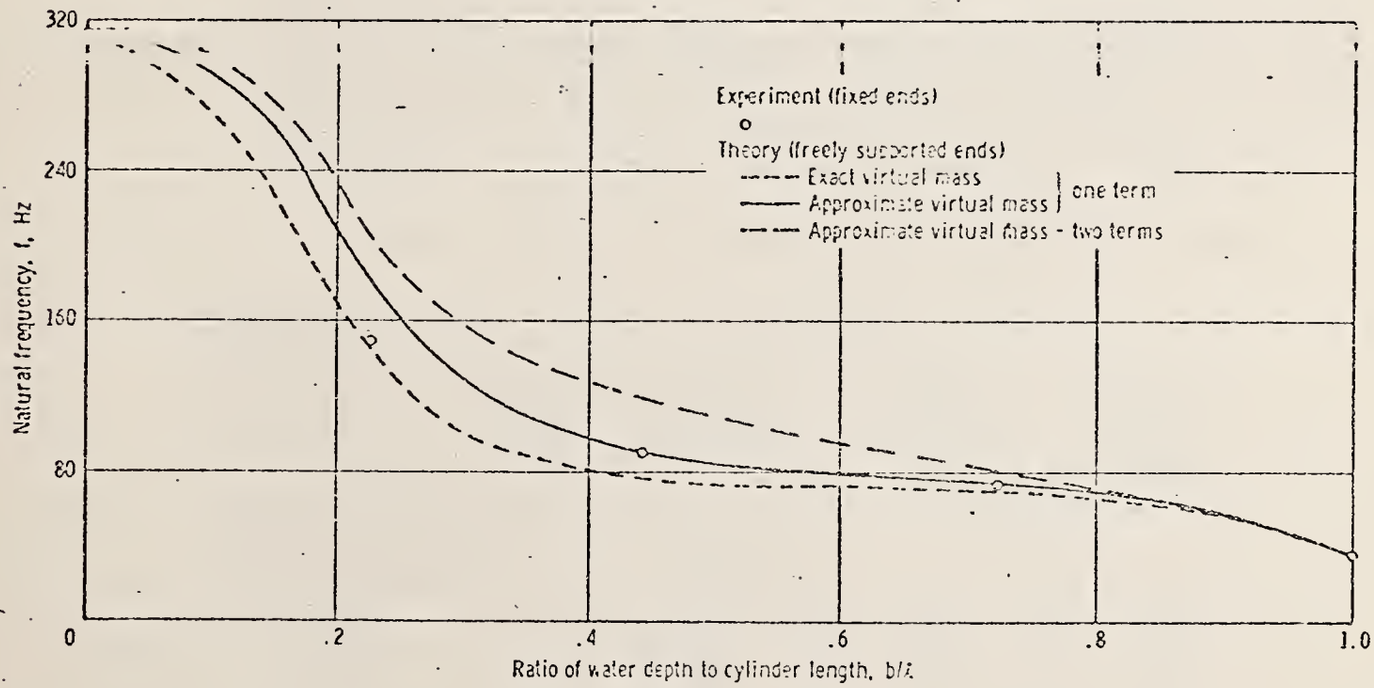

FIGURE 5. SAMPLE, SCREENING (TOP) AND CODING (BOTTOM) USED AS SUBSTITUTES FOR COLOR.

(5) Fold-ins. Wherever possible, avoid the use of oversize illustrations that must be folded. Often a large illustration can be divided to appear on facing pages. Make fold-ins or gate folds begin on a right-hand page.

(6) Numbering. Number illustrations to which reference is made in the text consecutively in Arabic numerals, preceded by the work "Figure," for example, Figure 1, Figure 2, or Figure 1-1, Figure 1-2, Figure 2-1, etc. Number illustrations within appendixes in a manner consistent with the appendix number, such as (Figure A-1, Figure B-2, etc.).

(7) Legends. Accompany each illustration, except for self-explanatory sketches, by a descriptive legend. The legend is ordinarily placed under the illustration and follows the figure number.

g. Tables.

(1) General. Tables should be as simple as possible so that the reader can easily grasp the meaning of the data. Use letters and numbers in tables that will be at least 6 point or higher in the final reproduced report. Prepare printout sheets from which electronically tabulated data are directly reproduced so that letters and numbers are sharp and unbroken. A sample table is shown in Figure 6.

TABLE 1.—SHORT-TIME XXXXXXXXXXXXXXXXXXXXXXX —— *Caption*

Boxhead

Temperature, K	Specimen type (a)	Ultimate tensile strength, N/m^2	Elongation between buttonheads, cm	Reduction of area, percent
Footnote reference		Tungsten		
1700	1	2200×10^3	1.57	95
1900	1	1312	1.60	75
2060	1	987	.69	36
2260	1	674	.51	25

[a]Recrystallized at 2370 K for 1/2 hour in vacuum. —— *Footnote*

FIGURE 6. SAMPLE TYPICAL TABLE LAYOUT. For more complete information on tables, see the Government Printing Office Style Manual.

(2) Placement. Locate tables near the first text reference made to them, except in special situations, such as when a report contains only a few text pages and many tables. In such cases, place the tables in numerical sequence in the back of the report. It is preferable that tables be placed so that they may be viewed without turning the page sideways. If a table has to be located sideways on a page, orient it so that the top of the table is at the left side of the page

(3) Headings and Columns. Give applicable unit of measure or degree in the column headings of tables. Do not repeat in the columns. When tables continue on two or more pages, note the continuation and repeat the column headings and rules on each page.

(4) Numbering. Number tables to which reference is made in the text consecutively in Arabic numerals, preceded by the word "Table," for example, Table 1, Table 2, or Table 1-1, Table 1-2, Table 2-1, etc. Number tables within appendixes in a manner consistent with the Appendix number, such as "Table A-1, Table B-2", etc.

(5) Captions. Give each table, except short ones which run in with the text, a descriptive caption following the table number. Place caption above the table.

h. Equations.

(1) General. Prepare mathematical matter with extreme care. Use machine or transfer-type composition when available. Identify symbols after first use to aid in reading from microform or in a separate list. Make opening and closing parentheses, brackets, and braces the same height as the tallest expression they enclose. Separate numerator from the denominator with a line as long as the longer of the two. Center both numerator and denominator on the line.

(2) Placement. Indent or center a displayed equation in the line immediately following the first text reference made to it. Break equations before an equal, plus, or multiplication sign. Align a group of separate but related equations by the equal signs and indent or center the group as a whole. Short equations not part of a series may be placed in the text rather than displayed.

(3) Numbering. Number equations which are part of a series or which are referred to in the text consecutively in Arabic numerals; for example, (1), (2), or (1-1), (1-2), (2-1), etc. Enclose each number in parentheses at the right margin on the last line of the equation numbers. Number equations within appendixes in a manner consistent with the appendix number, such as (A-1), (B-2), etc.

i. Distribution. Do not include a distribution list in a published DOT report.

(1) Availability of Published Reports. Information resulting from DOT-sponsored R&D must receive proper dissemination throughout the DOT and the transportation community. Each sponsoring agency is to announce its published reports and their availability from the National Technical Information Service.

(2) Distribution of Published Reports. DOT sponsoring elements will establish a distribution list for each published report. As a minimum requirement such list shall specify 6 copies for the DOT Headquarters Library (TAD-491), and provide for adequate distribution within the DOT sponsoring agency and appropriate Departmental offices (for example, Transportation Systems Center, Cambridge, Massachusetts). When the report is to be made available to the public, the list shall specify at least 12 copies for the National Technical Information Service, Springfield, Virginia 22151.

(3) Distribution of Technical Report Documentation Pages. When the information needs of an addressee can be satisfied by copies of the completed Technical Report Documentation Page, consideration should be given to furnishing documentation pages in lieu of copies of published reports. DOT sponsoring agencies are to ensure that one copy of a completed documentation page of each accepted report, whether freely dissiminated or restricted from public distribution is forwarded to the DOT R&D Information Officer, TST-25.

i. Production.

(1) Composition.

(a) Type Size. Use a minimum 8-point type size or typewriter for the main text of the report.

(b) Typed Copy. Use black ribbon on opaque white paper to type reproducible copy.

(c) Line Spacing. Use single or 1½ spacing for reports prepared by typewriter for reproduction, except when extra spacing between lines is necessary to assure clarity of run-in equations, symbols, etc. Use 1½ or double-spacing for manuscripts.

(d) Margins. Use margins of at least 1 inch on all sides of text pages.

(e) Columns. Prepare text pages with a single column, not justified on the right margin, unless the sponsoring agency authorizes justification or use of more than one column.

(f) Page Numbering. Wherever practicable, number all pages throughout a report consecutively at the bottom with Arabic numerals. In special cases, number by section or chapter (1-1, 1-2, 2-1, etc.). Odd-numbered pages are right-hand pages and even-numbered pages are left hand pages.

k. Limitation on Printing. Contractors shall not become prime sources of printing for agencies unless so authorized by the Joint Committee on Printing. See paragraphs 37 and 38, Government Printing and Binding Regulations (listed in paragraph "References"). Duplicating (not printing) shall conform to paragraph 2 of these Regulations. Printing shall not be a preplanned contractual requirement. Contractors shall furnish one reproducible copy of the final approved report within the time specified in the contract. Only clean tone or line art and original photographs and text suitable for camera copy for offset printing shall be submitted.

l. Workmanship. Filled-in or broken letters, illegible text or illustrations (including lettering), or similar imperfections are not acceptable. Only reproduced reports that will be legible in microform are acceptable.

m. Cover Size, Stock, and Ink. Reproduced reports may have separate covers or self covers cut to page size. Use 110-pound index (Government Specification JCP K10) 50-pound antique (JCP L20) 44-pound white ledger (JCP J10) or similar commercial weight paper for separate covers. Use black ink for self covers. Do not use covers with windows.

n. Page Size, Stock, and Ink. Reproduced reports shall be approximately 8 by 10½ inches or 8½ by 11 inches in size. Use black ink on opaque white paper. Use both sides of of the sheet to the maximum extent practicable.

o. Binding. Use side-stitching, saddle-stitching, or glue-back binding. Other types of binding require the approval of the sponsoring agency.

p. Decorative Features and Advertising. Do not use advertising display on pages.

9. REVIEW AND ACCEPTANCE. To ensure that DOT technical reports conform to the established standards of format and distribution and to protect the Government interest against possible litigation, all reports shall be reviewed and accepted as follows:

a. Review. Types of reports to be reviewed and criteria for the review will be according to the provisions of the individual work agreements (contract, project plan agreement, grant, etc.). Within 30 days after completion of the technical work related to a contract, grant, or project phase, the performing organization shall submit advance draft copies of the report with a letter of transmittal to the concerned element of the DOT sponsoring organization for review and approval. Such review is for the purpose of assuring that the report is in compliance with the project assignment or contract and in conformity with the format guidelines established by this order.

b. Approval. Approval or critique of reports prepared by DOT elements will be provided performing organizations in writing by the DOT sponsoring organization concerned, within 60 days of receipt of draft copies. For contractor prepared reports, approval will be provided in writing by the contracting officer concerned.

c. Resolution of Conflicts. In the event of a conflict which cannot be resolved between the performer and the sponsoring organization, the matter will be referred to TST-42 for resolution.

d. Waiver of Approval Authority. In cases where the sponsoring organization waives its review and approval authority, such waiver shall be specified in the agreement documentation.

DOT-TST-72-1

Technical Report Documentation Page

1. Report No.	2. Government Accession No.	3. Recipient's Catalog No.
4. Title and Subtitle		5. Report Date
		6. Performing Organization Code
7. Author(s)		8. Performing Organization Report No.
9. Performing Organization Name and Address		10. Work Unit No. (TRAIS)
		11. Contract or Grant No.
12. Sponsoring Agency Name and Address		13. Type of Report and Period Covered
		14. Sponsoring Agency Code

15. Supplementary Notes

16. Abstract

17. Key Words	18. Distribution Statement

19. Security Classif. (of this report)	20. Security Classif. (of this page)	21. No. of Pages	22. Price

Form DOT F 1700.7

Reproduction of this page is authorized.

UNITED STATES GOVERNMENT

Memorandum

DEPARTMENT OF TRANSPORTATION
URBAN MASS TRANSPORTATION ADMINISTRATION

DATE: September 7, 1972

In reply refer to:

SUBJECT: Extension of Requirements for Rooms 3328 and 9411

FROM : Office Services Manager

TO : Chief, Buildings Engineering & Design Division, TAD-47

Confirming yesterday's discussion, we have need to extend our "leases" on rooms 3328-30 and 9411.

The Arthur Anderson accounting team effort is in its final phase, and the project manager feels we will need to retain their services until November 15. At that time, barring unforseen changes, we will release and vacate that area.

The small, 3 room area of 9411 is now occupied by 4 UMTA employees and a considerable number of necessary file cabinets. This "island" has provided deeply needed relief for 2 of our program offices, and we cannot forsee any possibility of releasing it until ultimate relief is provided by the opening of the Buzzards Point building.

We appreciate your cooperation in this matter.

James L. Webb, UAD-45

cc: Mr. Williams, UCR-1
Mr. Hoadley, UAD-20
Mr. Hughes, URD-50

August 21, 1972

To: Mr. Hughes

From: David Lee

Re: Progress Report, week of August 14-18

The following work has been completed:

1. The proofreading of all abstracts was completed; all PB numbers were checked for accuracy at NTIS. All abstracts will be proofread one final time prior to publication.

2. The two Author Indexes (ie. by individual name and by organization) and the Title Index have been completed. These will require proofreading prior to publication, but it is not anticipated that any changes will be necessary.

3. Work on the Key Word Subject Index has begun.

7 August 1972

To: Mr. Hughes

From: David Lee

Re: Progress Report, week of July 31 to date

The following work has been completed:

1. All abstracts to be published have been proofread and corrected. In most cases, minor errors were corrected easily; in other cases, however, I have had to retype the entire abstracts.

2. In all, we now have 458 abstracts ready for publication. This number includes:

   144 MTD abstracts

   108 Tech. Studies abstracts

   132 RD & D abstracts (including 53 from the New Systems Study)

   74 URT abstracts

3. My next task will be to check the bibliographic information on each abstract against our card files and the actual reports. Following this, I shall run a final check of all NTIS accession numbers to ensure accuracy. At that point we shall be ready to begin the indexing.

4. Please find attached the preliminary results of our UMTA Reports Library Users Survey. These data indicate that the Library is receiving extensive use not only by UMTA personnel, but also by outside people who are often referred to us by other offices. Also note that although the card files have been used most often (usually to identify PB numbers for specific requests), substantial use of our abstracts has also been made. Most abstract users have made Xerox copies.

UMTA REPORTS LIBRARY
Users Survey

Date TO DATE

How Used:

Telephone	7
Letter	1
In Person	7

Materials Used:

Card Files	8
Key Word Index	4
Abstracts	6
Reports	6
Other Sources	1

User Profile:

UMTA Personnel	7
Other DOT	1
Other Fed.	0
Other	7

COMMENTS:

PRELIMINARY SURVEY FINDINGS

ISPOR

31 July 1972

To: Mr. Hughes

From: David Lee

Re: Progress Report, week of July 24-28

The following work was completed:

-- All abstracts of reports available from NTIS are being proofread and corrected. At present, about 60% of all such abstracts have been completed; these include all university studies, the New Systems Study, all RD & D reports, and about 1/2 of all technical studies. It is anticipated that these initial corrections will require the rest of this week. All abstracts will be proofread a second time prior to publication.

UNITED STATES GOVERNMENT

Memorandum

DEPARTMENT OF TRANSPORTATION
URBAN MASS TRANSPORTATION ADMINISTRATION

DATE: JUL 5 1972

In reply refer to:

SUBJECT: Availability of Manual Key Word Retrieval System for UMTA Reports

FROM: Deputy Administrator

TO: UMTA Executive Staff

As you have been aware, for some time work has been underway to bring together reports resulting from past UMTA projects, prepare abstracts and establish a report retrieval system. This effort is essentially complete and as of now the key word retrieval system is operational.

Both the Library of UMTA Reports and the Key Word Retrieval System have been set up in room 9411.

Briefly the system is as follows: A list of key words appropriate to urban transportation has been developed. A copy of the list is attached and additional printed copies will be available shortly. In the process of abstracting each report appropriate key words from the list have been identified and assigned. A file has been established with a folder for each key word. In the folder is a copy of each abstract for which that key word has been identified. This then enables anyone seeking to determine what UMTA reports exist on a particular subject to select the appropriate folder(s) in the key word file and a review of the abstracts contained therein will determine if there are any reports pertinent to his given need. Any given report may have from one to as many as twelve key words assigned.

Included in the system are Research, Development and Demonstration Reports, Technical Study Reports, Service Development Reports, Program Planning Reports, and University Research and Training Reports.

Although the abstracts contained in the key word files are not to be removed, another copy of that abstract can be borrowed for reproduction if desired.

Included in the information contained on the abstract is the National Technical Information Accession (PB) Number in the event the searcher desires to obtain a copy of the full text report for retention. One copy of the report is maintained in the UMTA Library and in most cases a copy is also in the DOT Library.

Responsibility for operation and maintenance of the system rests with Phil Hughes in URD. Please contact him if you have any questions. Mr. David Lee, located in room 9411, is maintaining the system for Mr. Hughes. Mr. Lee can be reached on extension 69624.

The system is available for use now by people in your respective organizations. I hope that they will take advantage of it. In doing so, I ask that you request that they respect the requirement not to remove materials from the files and to return any material used to its correct place. Mr. Lee has been asked to initially keep a log of system users together with comments or suggestions that can be of help in making improvements in the system.

William S. Allison

William S. Allison

UNITED STATES GOVERNMENT

Memorandum

DEPARTMENT OF TRANSPORTATION
URBAN MASS TRANSPORTATION ADMINISTRATION

DATE: JUL 5 1972

In reply refer to:

SUBJECT: Availability of Manual Key Word Retrieval System for UMTA Reports

FROM : Deputy Administrator

TO : UMTA Executive Staff

As you have been aware, for some time work has been underway to bring together reports resulting from past UMTA projects, prepare abstracts and establish a report retrieval system. This effort is essentially complete and as of now the key word retrieval system is operational.

Both the Library of UMTA Reports and the Key Word Retrieval System have been set up in room 9411.

Briefly the system is as follows: A list of key words appropriate to urban transportation has been developed. A copy of the list is attached and additional printed copies will be available shortly. In the process of abstracting each report appropriate key words from the list have been identified and assigned. A file has been established with a folder for each key word. In the folder is a copy of each abstract for which that key word has been identified. This then enables anyone seeking to determine what UMTA reports exist on a particular subject to select the appropriate folder(s) in the key word file and a review of the abstracts contained therein will determine if there are any reports pertinent to his given need. Any given report may have from one to as many as twelve key words assigned.

Included in the system are Research, Development and Demonstration Reports, Technical Study Reports, Service Development Reports, Program Planning Reports, and University Research and Training Reports.

Although the abstracts contained in the key word files are not to be removed, another copy of that abstract can be borrowed for reproduction if desired.

Included in the information contained on the abstract is the National Technical Information Accession (PB) Number in the event the searcher desires to obtain a copy of the full text report for retention. One copy of the report is maintained in the UMTA Library and in most cases a copy is also in the DOT Library.

Responsibility for operation and maintenance of the system rests with Phil Hughes in URD. Please contact him if you have any questions. Mr. David Lee, located in room 9411, is maintaining the system for Mr. Hughes. Mr. Lee can be reached on extension 69624.

The system is available for use now by people in your respective organizations. I hope that they will take advantage of it. In doing so, I ask that you request that they respect the requirement not to remove materials from the files and to return any material used to its correct place. Mr. Lee has been asked to initially keep a log of system users together with comments or suggestions that can be of help in making improvements in the system.

William S. Allison

William S. Allison

JUL 5 1972

Availability of Manual Key Word Retrieval System for UMTA Reports

Deputy Administrator

UMTA Executive Staff

As you have been aware, for some time work has been underway to bring together reports resulting from past UMTA projects, prepare abstracts and establish a report retrieval system. This effort is essentially complete and as of now the key word retrieval system is operational.

Both the Library of UMTA Reports and the Key Word Retrieval System have been set up in room 9411.

Briefly the system is as follows: A list of key words appropriate to urban transportation has been developed. A copy of the list is attached and additional printed copies will be available shortly. In the process of abstracting each report appropriate key words from the list have been identified and assigned. A file has been established with a folder for each key word. In the folder is a copy of each abstract for which that key word has been identified. This then enables anyone seeking to determine what UMTA reports exist on a particular subject to select the appropriate folder(s) in the key word file and a review of the abstracts contained therein will determine if there are any reports pertinent to his given need. Any given report may have from one to as many as twelve key words assigned.

Included in the system are Research, Development and Demonstration Reports, Technical Study Reports, Service Development Reports, Program Planning Reports, and University Research and Training Reports.

Although the abstracts contained in the key word files are not to be removed, another copy of that abstract can be borrowed for reproduction if desired.

Included in the information contained on the abstract is the National Technical Information Accession (PB) Number in the event the searcher desires to obtain a copy of the full text report for retention. One copy of the report is maintained in the UMTA Library and in most cases a copy is also in the DOT Library.

CONCURRENCES	
RTG. SYMBOL	URD-50
INITIALS/SIG.	Hughes
DATE	7/3/72
RTG. SYMBOL	URD-1
INITIALS/SIG.	Hemmes
DATE	7/3/72
RTG. SYMBOL	UOA-10
INITIALS/SIG.	Childs
DATE	
RTG. SYMBOL	
INITIALS/SIG.	
DATE	
RTG. SYMBOL	
INITIALS/SIG.	
DATE	
RTG. SYMBOL	
INITIALS/SIG.	
DATE	
RTG. SYMBOL	
INITIALS/SIG.	
DATE	
RTG. SYMBOL	
INITIALS/SIG.	
DATE	

JUL 5 1972

Availability of Manual Key Word Retrieval
System for UMTA Reports

Deputy Administrator

UMTA Executive Staff

As you have been aware, for some time work has been underway to bring together reports resulting from past UMTA projects, prepare abstracts and establish a report retrieval system. This effort is essentially complete and as of now the key word retrieval system is operational.

Both the library of UMTA Reports and the Key Word Retrieval System have been set up in room 9211.

Briefly the system is as follows: A list of key words pertinent to urban transportation has been developed. A copy of the list is attached and additional printed copies will be available shortly. In the process of abstracting each report appropriate key words from the list have been identified and assigned. A file has been established with a folder for each key word. In the folder is a copy of each abstract for which the key word has been identified. This then enables anyone seeking to determine what UMTA reports exist on a particular subject to select the appropriate folder(s) in the key word file and a review of the abstracts contained therein will determine if there are any reports pertinent to his given need. Any given report may have from one to as many as twelve key words assigned.

Included in the system are Research, Development and Demonstration Reports, Technical Study Reports, Service Development Reports, Program Planning Reports, and University Research and Training Reports.

Although the abstracts contained in the key word files are not to be removed, another copy of that abstract can be borrowed for reproduction if desired.

Included in the information contained on the abstract is the National Technical Information Accession (NTI) Number in the event the searcher desires to obtain a copy of the full text report for retention. One copy of the report is maintained in the UMTA Library and in most cases a copy is also in the DOT Library.

Responsibility for operation and maintenance of the system rests with Phil Hughes in URD. Please contact him if you have any questions. Mr. David Lee, located in room 9411, is maintaining the system for Mr. Hughes. Mr. Lee can be reached on extension 69624.

The system is available for use now by people in your respective organizations. I hope that they will take advantage of it. In doing so, I ask that you request that they respect the requirement not to remove materials from the files and to return any material used to its correct place. Mr. Lee has been asked to initially keep a log of system users together with comments or suggestions that can be of help in making improvements in the system.

/s/ William S. Allison

William S. Allison

cc:
UMTA File
URD Chron UOA-Z
URD-50
URD-50:HUGHES:taf:7/3/72

April 6, 1972

To: Mr. Hughes

From: David Lee

Re: Stanford University "Urban Passenger Transport Keyword Classification System"

Sent to Ruggles for comment 4/9/72

This system appears to be more applicable as a taxonomy for the general literature than as an indexing system for an UMTA reports library. Its principal disadvantage is that most UMTA reports embrace many topics simultaneously and thus do not fit easily into a structural classification system such as this. We have applied as many as a dozen Key Words to our abstracts, and these frequently reflect a highly diverse topical content. It was precisely because our literature did not fit easily into a taxonomy that the reports were indexed by project number rather than by subject as in a Dewey Decimal System or the "Keyword Classification System" proposed here. Several specific comments follow:

1. Use of DEMONSTRATION as a "Nature" category will drastically affect classification of MTD reports in more meaningful slots. For example, many DEMONSTRATIONS are EVALUATIONS and DESCRIPTIONS of TECHNOLOGY applied in specific CASES. Yet the author recommends that only a few "unusual" and "highly ambitious" studies should be classified by more than one Nature term.

2. The nature of many UMTA reports requires automatically that they embrace a MULTI-DISCIPLINARY viewpoint. Thus the classification by "Discipline or Field" of technical studies would be either very difficult or they would be lumped under the rather meaningless GENERAL term.

3. At least two of the five "Spacial Extent" categories -- INTERCITY and INTERNATIONAL -- would have minimal application to the UMTA literature.

4. "Regional Grouping" is of little or no value to most UMTA reports. This applies also to the "City" classification. Although many reports do pertain to specific urban areas (eg. technical studies, the Center City Project, etc.), many reports dealing with empirical methods or with system engineering make no such distinction.

5. The "Objective" categories are already included in our Key Word Subject List. Again, many reports embrace several of these categories at once. There are also a vast number of important "objective" categories not included in the Stanford list (eg. employment, poverty, security, ecology, economy, etc.).

6. By definition, nearly all of our reports would have to be filed under the "Commodity and Service Transported" category, PASSENGERS.

7. The distinction between the "Objectives" and "Problems" categories is unclear.

April 3, 1972

To: Mr. Hughes

From: David Lee

Re: Revised list of abstracts for which we do not have NTIS order numbers

I have completed a cross-check between our inventory of abstracts and the card file of UMTA reports which have PB order numbers from the National Technical Information Service. A total of 74 new order numbers were obtained, and I have eliminated those abstracts from the inventory.

Attached are the 251 remaining abstracts, broken down by project category, which still do not have NTIS order numbers.

I have also eliminated from the URT folder those abstracts marked "rejected."

Thott

Question separate index #/PB list ?

prefer to have up to 25 copies of UMTA documents submitted to NTIS (section 9 may not hold

Mr. Jim Jennings NTIS for price on bulk quantity
321-8549

PB # on bottom of sheet

number pages in lower right copy

watch # of copies UMTA wants to avoid GPO.

largest size report NTIS can handle 11 X 17 [can cut if larger]

24 July 1972

To: Mr. Hughes

From: David Lee

Re: Progress Report, week of July 17-21

The following work was completed:

1. Xeroxing of all reports for submission to the Highway Research Board was completed.

2. Ten new reports, previously ordered from NTIS, were catalogued, indexed, abstracted, keyworded, filed, and shelved.

3. Seventy-four abstracts have been proofread and corrected. A final proofreading of all appropriate abstracts will be performed prior to publication.

JUL 19 1972

Mr. Donald G. Capelle
Vice President for Research
Alan M. Vorhees & Assoc. Inc
1100 Glendon Ave.
Los Angeles, California 90024

Dear Don:

It looks as if in about 60 days the cross indexed booklet of abstracts of UMTA reports will be available. This will include about 550 UMTA reports.

Many of these reports are currently in the Department of Transportation Library on the second floor of the NASSIF Building here in Washington. Some of your people could search them out in the Library's index cards if there is an immediate need.

Sincerely,

/s/ Philip G. Hughes

Philip G. Hughes
Director, University
Grant Programs Division

cc:
UMTA File
URD Chron
URD-50
URD-50:HUGHES:taf:7/19/72

CONCURRENCES

RTG. SYMBOL	INITIALS/SIG.	DATE

JUL 19 1972

Mr. Donald G. Cogella
Vice President for Business
Alan M. Norman & Assoc. Inc
1100 Glendon Ave.
Los Angeles, California 90024

Dear Don:

If Tools as it is about to do does the great Federal Center of abstracts of data reports will be available. This will include about 150 DATA reports.

Many of these reports are currently in the department of Transportation Library on the second floor of the NASSIF Building here in Washington. Some of your people could search them out in the Library's index cards if there is an immediate need.

Sincerely,

/s/ Philip G. Hughes

Philip G. Hughes
Director, Informatics
Urban Transport Division

cc:
DOTA File
UTD Chron
UTD-40
UTD-50:HUGHES:kaf:7/19/72

1100 GLENDON AVENUE, LOS ANGELES, CALIFORNIA 90024 TWX 910/3[illegible]6893 213/477-2051

AMV

ALAN M. VOORHEES
& ASSOCIATES, INC.

TRANSPORTATION AND PLANNING CONSULTANTS

July 6, 1972

Mr. Philip Hughes
Office of Research
Urban Mass Transportation Administration
400 7th Street, N. W.
Washington, D. C. 20590

Dear Phil:

It was a pleasure meeting with you last month in Mr. Yu's office. As I indicated at that time, we are presently involved in a small research project for TEU concerning short-range transit planning. Your mention of the information program you are developing appears to have application in this project, and I would like to ask about the status of the program. Can you furnish me with details regarding its availability? I am especially interested in reviewing copies of UMTA reports (grants, demos, technical studies, etc.) having to do with short-range transit planning.

Any information you can furnish will be appreciated.

Sincerely yours,

Donald G. Capelle
Vice President for
Research

DGC:jo

cc: Ronald McCready
Joel Ettinger

PR DOT-UT-20029

JUL 19 1972

Director, University Grant
Programs Division

TAD-431
Mike College

Confirming our discussion of 7/19/72, Procurement Request DOT-UT-20029 should be cancelled.

Delays in arriving at the point of letting a contract and the necessity to do certain items of work in house during this period now make the award of any contract untimely. The possibility of problems in reaching agreement with potential sources of supply on the exact scope of work exist which would cause additional delays.

For these reasons then this request is cancelled.

/s/ Philip G. Hughes

Philip G. Hughes

cc:
UMTA File
URD Chron
URD-50
URD-50:HUGHES:taf:7/19/72

CONCURRENCES
RTG. SYMBOL
INITIALS/SIG.
DATE
RTG. SYMBOL
INITIALS/SIG.
DATE
RTG. SYMBOL
INITIALS/SIG.
DATE
RTG. SYMBOL
INITIALS/SIG.
DATE
RTG. SYMBOL
INITIALS/SIG.
DATE
RTG. SYMBOL
INITIALS/SIG.
DATE
RTG. SYMBOL
INITIALS/SIG.
DATE
RTG. SYMBOL
INITIALS/SIG.
DATE

JUL 19 1972

Director, University Grant
Programs Division

TEA-621
Mike Dotlego

Confirming our discussion of 7/19/72, procurement request
DOT-UT-2003-7 should be cancelled.

Delays in arriving at the notion of rejecting a contract and the necessity to do certain items of work in house during this period now make the start of any contract unlikely. The possibility of problems in reaching agreement with educational centers of people on the exact scope of work with which we can live additional delay for these reasons when this request is cancelled.

/s/ Philip G. Hughes

Philip G. Hughes

cc:
UMTA File
UPD Chron
UPD-50
UPD-50:HUGHES:bar:7/19/72

17 July 1972

To: Mr. Hughes

From: David Lee

Re: Progress Report, Week of July 10-14

The following work was completed:

1. All Keyword Index files and related material were moved into the new cabinet.

2. Six new reports were received, indexed, and filed. Two of these reports were abstracted and keyworded. The others were supplementary documents which did not require abstracting.

3. A preliminary listing of errors on abstracts which will require correction was begun. In general, these errors include improper keywords, punctuation or typographical errors, and other minor problems. The listing will serve to guide a final proofreading of all abstracts prior to their publication.

4. Xerox copies of all abstracts were made for the Highway Research Board.

To: Mr. Hughes July 10, 1972

From: David Lee

Re: Progress Report, Week of July 5-7

The following work was completed:

1. The move into our new office was completed.
2. Two new reports were catalogued, indexed, abstracted, key-worded, and shelved.
3. A seven-page "Guide for the Preparation of Abstracts" was prepared.
4. Definitions of selected keywords were developed.

To: Mr. Hughes 5 July 1972

From: David Lee

Re: Progress Report, week of June 26-30

The following work was completed:

1. Alterations to the Key Word Index File were completed. This process entailed the creation of appropriate sub-headings and the re-filing of corrected abstract copies.

2. The List of Key Word Subject Headings was finalized for distribution. All Key Words formerly capitalized were also underlined for easy reference.

3. An experiment was conducted to determine the feasibility of submitting conclusionary material in abstracts sent to NTIS. Four such abstracts were prepared.

4. A users survey for the UMTA Reports Library was designed and implemented. A copy of the survey form is attached.

5. Five new reports were abstracted, key-worded, indexed, and shelved.

6. The UMTA Reports Library was moved to a new location near room 9411 on Friday.

UMTA REPORTS LIBRARY
Users Survey

Date _____

How Used:

Telephone _____

Letter _____

In Person _____

Materials Used:

Card Files _____

Key Word Index _____

Abstracts _____

Reports _____

Other Sources _____

User Profile:

UMTA Personnel _____

Other DOT _____

Other Fed. _____

Other _____

_____

COMMENTS:

UNITED STATES GOVERNMENT

Memorandum

DEPARTMENT OF TRANSPORTATION
URBAN MASS TRANSPORTATION ADMINISTRATION

DATE: JUL 3 1972

In reply refer to:

SUBJECT: Abstracting of UMTA Reports

FROM : Philip G. Hughes

TO : William S. Allison

During the course of our meeting on the 22nd, I mentioned several thoughts concerning the handling of reports going to the National Technical Information Service and the abstracting of those reports.

Presently UMTA project reports selected for placement in the National Technical Information Service are sent to UAD-10 for processing. If accompanied by a title page, including abstract, the report is prepared for transmittal to the National Technical Information Service. Distribution of copies internally and to the Department of Transportation Library and the UMTA Library is also made. If a title page and abstract do not accompany the report, it is prepared by UAD. After the PB number has been returned by NTIS, UAD records the number and transmits it back to the program manager and also to the UMTA Library.

It would seem that there is a sound basis for combining the function just described with the activity of keeping up the UMTA Library and key word retrieval system. Concentrating all of this activity in one person, a higher degree of expertise and efficiency can be brought to bear. The Office of Administration currently uses approximately 25 to 35% of one person's time in handling these reports. The work load is quite fluctuating due to the bunching of arrival of incoming reports for processing.

The second point pertains to abstracting of the UMTA reports. Presently one abstract is utilized in transmitting the report to NTIS. It is restricted by NTIS to 200 words in length and generally describes the nature of the report. The abstracts prepared through the recent UMTA effort reached more nearly 400 words in length and include significant conclusions resulting from the project or study. It would appear that there is considerable advantage to be gained by using one abstract for both purposes. With this thought in mind, I have asked David Lee to prepare abstracts on about 1/2 dozen new reports that are to go to NTIS. These abstracts will conform in length to the requirements of NTIS but will include the type of information of value to the UMTA report retrieval system, i.e. conclusions. These abstracts will be sent to NTIS to determine if they will accept them. If so, then we should move towards utilization of just one abstract.

This would entail the preparation of instructions for contractors and grantees to use in preparing abstracts.

Subsequent to our discussions, David Lee has decided that he would like to continue working rather than returning to school full time. Based on his experience and performance, I am exploring bringing him aboard as a permanent employee.

cc: R. A. Hemmes

Abstracting of UMTA Reports

Philip G. Hughes JUL 3 1972

William S. Allison

During the course of our meeting on the 22nd, I mentioned several thoughts concerning the handling of reports going to the National Technical Information Service and the abstracting of those reports.

Presently UMTA project reports selected for placement in the National Technical Information Service are sent to UAD-10 for processing. If accompanied by a title page, including abstract, the report is prepared for transmittal to the National Technical Information Service. Distribution of copies internally and to the Department of Transportation Library and the UMTA Library is also made. If a title page and abstract do not accompany the report, it is prepared by UAD. After the PB number has been returned by NTIS, UAD records the number and transmits it back to the program manager and also to the UMTA Library.

It would seem that there is a sound basis for combining the function just described with the activity of keeping up the UMTA Library and key word retrieval system. Concentrating all of his activity in one person, a higher degree of expertise and efficiency can be brought to bear. The Office of Administration currently uses approximately 25 to 35% of one person's time in handling these reports. The work load is quite fluctuating due to the bunching of arrival of incoming reports for processing.

The second point pertains to abstracting of the UMTA reports. Presently one abstract is utilized in transmitting the report to NTIS. It is restricted by NTIS to 200 words in length and generally describes the nature of the report. The abstracts prepared through the recent UMTA effort reached more nearly 400 words in length and include significant conclusions resulting from the project or study. It would appear that there is considerable advantage to be gained by using one abstract for both purposes. With this thought in mind, I have asked David Lee to prepare abstracts on about 1/2 dozen new reports that are to go to NTIS. These abstracts will conform in length to the requirements of NTIS but will include the type of information of value to the UMTA report retrieval system, i.e. conclusions. These abstracts will be sent to NTIS to determine if they will accept them. If so, then we should move towards utilization of just one abstract.

CONCURRENCES
RTG. SYMBOL
INITIALS/SIG.
DATE
RTG. SYMBOL
INITIALS/SIG.
DATE
RTG. SYMBOL
INITIALS/SIG.
DATE
RTG. SYMBOL
INITIALS/SIG.
DATE
RTG. SYMBOL
INITIALS/SIG.
DATE
RTG. SYMBOL
INITIALS/SIG.
DATE
RTG. SYMBOL
INITIALS/SIG.
DATE
RTG. SYMBOL
INITIALS/SIG.
DATE

Abstracting of NATA Reports

Philip G. Hughes

JUL 3 1972

William S. Mattson

During the course of our meeting on the 22nd, I mentioned several thoughts concerning the handling of reports going to the National Technical Information Service and the abstracting of those reports.

Presently NATA project reports selected for placement in the National Technical Information Service are sent to NAO-10 for processing. If accompanied by a title page, including abstract, the report is prepared for transmittal to the National Technical Information Service. Distribution of copies internally and to the Department of Transportation Library and the NATA Library is also made. If a title page and abstract do not accompany the report, it is prepared by NAO. After the 20 months has been returned by NTIS, NAO records the number and transmits it back to the program manager and also to the NATA Library.

It would seem that there is a sound basis for combining the function just described with the activity of keeping up the NATA Library and for more rapidly systems. Concentration of this activity in one person, a higher degree of expertise and efficiency can be brought to bear. The Office of Administration currently uses approximately 25 to 30% of one person's time in handling these reports. The work load is quite fluctuating due to the bunching of arrival of incoming reports for processing.

The second point pertains to abstracting of the NATA reports. Presently one abstract is utilized in transmitting the report to NTIS. It is restricted by NTIS to 200 words in length and generally describes the nature of the report. The abstracts prepared through the recent NATA efforts reached more nearly 400 words in length and include significant conclusions resulting from the project or study. It would appear that there is considerable advantage to be gained by using one abstract for both purposes. With this thought in mind, I have asked David Lee to prepare abstracts on about 1/2 dozen new reports that are go to NTIS. These abstracts will conform in length to the requirements of NTIS but will include the type of information of value to the NATA remote retrieval system, i.e. conclusions. These abstracts will be sent to NTIS to determine if they will accept them. If so, then we should move towards utilization of just one abstract.

This would entail the preparation of instructions for contractors and grantees to use in preparing abstracts.

Subsequent to our discussions, David Lee has decided that he would like to continue working rather than returning to school full time. Based on his experience and performance, I am exploring bringing him aboard as a permanent employee.

/s/ Philip G. Hughes

cc: R. A. Hemmes

UMTA File
URD Chron
URD-50
URD-50:HUGHES:taf:7/3/72

This would entail the preparation of instructions for contractors and grantees to use in preparing abstracts.

Subsequent to our discussion, Walt Lee has decided that he would like to continue working rather than resigning to school full time. Based on his experience and performance, I am exploring retaining him above as a permanent employee.

/s/ Philip J. Hughes

cc: J. A. Kenney

UNTA File
UPD Chron
UPD-50
UPD-50:HUGHES:taf:5/9/72

June 26, 1972

To: Mr. Hughes

From: David Lee

Re: Progress Report, week of June 19-23

The following work was completed:

1. Xerox copies of all abstracts have been produced and filed in their respective "Key-Word" folders.

2. The large number of abstracts filed under certain Key Words required the development of additional subheadings. Subheadings for the two largest entries were conceived and the task of altering each abstract is now approximately 2/3 complete.

3. Two new reports have been indexed, abstracted, key-worded, catalogued, and shelved.

Access,
    planning and control

Advertising and Promotion

Aerodynamics

only Key words

Aerial Structures

Age: see also Elderly; see also Youth

Air Conditioning

Air Cushion Vehicle

Air Pollution: see also Environment and Environmental Control

Aircraft,
    VTOL
    STOL
    traffic control

Airport,
    access
    planning and operation

Algorithms

BART (Bay Area Rapid Transit)

Batteries and Cells

Benefit-Cost Analysis: see also Quality Control

Bi-Modal Systems: see also Interfaces; see also Dual-Mode Systems

Bibliographies

follows Keyword to show other Keywords

Boring and Boring Machines: see also Tunnels and Tunneling

Brakes and Braking,
    air
    disc
    dynamic
    friction
    hydraulic
    pneumatic
    regenerative

Budgets and Budget Planning

Bus,
    busway: see also Guideways
    commuter
    cost
    design: see also Vehicle, design
    driver
    express: see also Bus, priorities

Bus (cont'd)
- feeder: see also Bi-Modal Systems
- Intercity (between two or more greater metropolitan areas)
- intracity (within one greater metropolitan area)
- jitney
- minibus
- priorities: see also Lane, reserved
- rapid transit
- school bus
- stations and shelters
- transfers: see also Fares, inclusive; see also Trip Generation

Center City

Codes and Coding: see also Computer, programming

Communications

Community Response

Computer,
- applications
- programming

Construction,
- contracts
- cost
- equipment
- materials

Conveyors

Cooling Systems: see also Air Conditioning

Corridors

Couplings: see also Linkages

Crime and Crime Prevention

Curves and Curvatures

Demand-Responsive Systems,
- Dial-A-Ride
- Genie Transit System

Demography: see also Center City; see also Urban Development, inclusive

Depreciation: see also Urban Development, renewal

Distribution Systems: see also People Movers, inclusive

Drag: see also Aerodynamics

Dual-Mode Systems: see also Bi-Modal Systems

Elderly

Electronic Vehicle Guidance: see also Headways; see also Sensors

Elevators

Emergency Vehicles and Services

Environment and Environmental Control: see also Air Pollution; see also Noise and Noise Control; see also Land Use; see also Urban Development, inclusive; see also Crime and Crime Prevention

Fares,
- collection
- cost determination
- passes: see also specific ridership groups; see also Fares, reduction
- reduction

Fasteners and Fastenings

Ferries: see also Bus, jitney

Fills

Financing Mass Transportation

Fire Prevention and Control

Flanges

Fluids and Fluid Mechanics

Flywheels

Foundations, structural

Freight Movement

Fuel,
- cells
- consumption
- storage and supply: see also Batteries and Cells

Games and Game Theory: see also Computer, inclusive

Government,
- county
- Federal
- intergovernmental relations
- taxation
- state
- urban

Guides and Guidance: see also Electronic Vehicle Guidance

Guideways

Handicapped

Headways

Heating

Highway,
- costs
- financing
- maintenance
- planning
- surfaces
- types

Hill Climbing

Housing: see also Relocation

Hydraulics

Hydrofoils: see also Air Cushion Vehicles

Industrial and Labor Relations: see also Manpower and Personnel

Information Aids

Inner City

Instrumentation

Insurance

Intercity Transportation: see also specific modes

Interfaces

Intermodal Competition

Intersections and Crossings

Insulation

Joint Development

Joints and Joining

Kiss and Ride

Kinetic Energy

Land Acquisition: see also Rights-of-Way

Land Use: see also Urban Development, inclusive

Lane, reserved

Lane Separation

Lights and Lighting

Line Supervision

Linkages: see also Couplings

Logistics

Maintenance,
- costs
- equipment
- facilities

Management,
- operations and techniques: see also Budgets and Budget Planning
- planning and analysis: see also Budgets and Budget Planning
- training techniques

Manpower and Personnel: see also Recruitment

Maps and Mapping: see also Topography

Market Research: see also Demography

Materials Handling

Measuring and Measurements: see also Instrumentation

Medical Centers

Meters and Metering

Mobile Overpass Roadway Repair Vehicle (MORV): see also Maintenance, equipment; see also Highway, maintenance

Modal Split

Mufflers

New Towns

Noise and Noise Control

Off-Peak Traffic

Overpasses

Parking,
- capacity and demand
- cost
- facilities
- Park-and-Ride
- planning
- regulations

Passenger Counters

Pedestrians

People Movers,
- Aerial Transit Systems
- Alden StaRRcar
- cable car
- Carveyor
- Dashaveyor
- General Electric Aerial Transport
- Hovair
- monorail
- Scherer Monobeam
- Synchroveyor
- Transit Expressway
- Transivator
- Varo-Monocab

Personal Rapid Transit

Pipes and Pipelines

Pneumatics

Poverty: see also Inner City

Power Distribution

Pressure and Measurement

Private Transportation,
- automobiles
- bus
- cycles
- car pools
- driver
- taxicabs

Propulsion Systems,
- diesel
- electric: see also Batteries and Cells
- external combustion
- internal combustion
- Hybrid
- horsepower
- linear induction
- turbines

Public Ownership

Public Relations

Qualitative Analysis

Quality Control

Quantitative Analysis

Race

Rail: see also People Movers, specific types,
automatic control
commuter
cost
materials
rolling stock
stations and terminals
systems planning and design

Recreational Facilities

Recruitment: see also Manpower and Personnel

Relocation

Research Operations

Ridership: see also Surveys; see also specific aspects of ridership

Right-of-Way

Roadbeds

Routes and Routing: see also Schedules and Scheduling; see also Computer, applications; see also Trip Generation

Rural AReas: see also Small Cities

Safety

Schedules and Scheduling: see also Routes and Routing; see also Computer, applications

Sensors: see also Vehicle, monitoring

Sidewalks

Signs and Signals

Site Selections

Skirts

Skokie-Swift

Small Cities

Social Benefits

Speed and Speed Control

Structural Analysis

Suburbs,
business districts

Suspension

Surveys

Switches and Switching

Taxonomy

Testing Facilities

Topography

Tolls

Tracks and Trackage: see also Rail, materials

Traffic,
- analysis
- congestion
- control
- flow
- peak-hour

Trip Generation

Trucks and Truck Lines: see also Freight Movement; see also Rail, rolling stock

Tubes and Tube Vehicles

Tunnels and Tunneling

Underground,
- shelters
- storage
- structures

Universities

Urban Development,
- planning
- renewal

Vehicle,
- design: see also specific modes
- monitoring

Vibrations

Weather Effects

Wheels

Youth

Section 9 Study Reports

JUN 20 1972

Director, University Grant
Programs Division

Acting Associate Administrator for
Program Operations

Attached is a draft copy of DOT Order 1700.18 pertaining to Publication and Distribution of DOT Scientific and Technical Reports.

I believe that you are aware of the work that has been done to bring together in useable form the reports resulting from UMTA projects including those of Section 9.

To help provide on a continuing basis reports that are easier to use, I would like to consider making the attached DOT Order applicable also to Section 9 reports.

Your comments on the application of the DOT Order will be appreciated.

/s/ original signed by

Philip G. Hughes

cc:
UMTA File
URD Chron
URD-50
URD-50:HUGHES:taf:6/19/72

CONCURRENCES
RTG. SYMBOL
INITIALS/SIG.
DATE
RTG. SYMBOL
INITIALS/SIG.
DATE
RTG. SYMBOL
INITIALS/SIG.
DATE
RTG. SYMBOL
INITIALS/SIG.
DATE
RTG. SYMBOL
INITIALS/SIG.
DATE
RTG. SYMBOL
INITIALS/SIG.
DATE
RTG. SYMBOL
INITIALS/SIG.
DATE
RTG. SYMBOL
INITIALS/SIG.
DATE

CONCURRENCE	
RTG. SYMBOL	
INITIALS/SIG.	
DATE	
RTG. SYMBOL	
INITIALS/SIG.	
DATE	
RTG. SYMBOL	
INITIALS/SIG.	
DATE	
RTG. SYMBOL	
INITIALS/SIG.	
DATE	
RTG. SYMBOL	
INITIALS/SIG.	
DATE	
RTG. SYMBOL	
INITIALS/SIG.	
DATE	
RTG. SYMBOL	
INITIALS/SIG.	
DATE	
RTG. SYMBOL	
INITIALS/SIG.	
DATE	

JUN 2 0 1972

Section 2 Index Concern

Transport Aviation
Transport Division

Robert Associate Administrator for
Flight Operations

Attached is a draft copy of FAR Order 7400.2 concerning re
Publication and Distribution of FAR Interpretations and Technical
Memoranda.

I believe that you are aware of the work that has been done to
bring members of industry from the regards receiving from LAPA
members including those of Section 2.

To help provide us a continuing means regarding that are desire to
use, I would like to consider making the attached FAR memos available
also in Section 2 regards.

Your comments on the publication of the FAR Order will be appreciated.

/s/ original signed by

Philip M. Hughes

cc:
LAPA file
UPD Chron
UPD-50
UPD-50:HUGHES:ban:6/19/72

April 13, 1972

To: Mr. Hughes

From: David Lee

Re: Dividers for Key Word Index file

There are three basic types of file dividers available at the G.S.A. store. Because folders are generally used to file written material, there is not enough demand to require more than just the three types.

The first divider is shaped thusly and is not practical for our purposes: The bottom tab contains a hole for filing in cabinets which have a rod running through a groove at the bottom. This tab would prevent the dividers from being removed, but since our files do not have the rods, these dividers cannot be used.

The second type divider is attached. The complete set has three tabs across the top.

The third type divider cannot be purchased separately. It resembles the attached sample except that: (1) the raised tab on top is not reinforced, and (2) the complete set has five tabs across the top rather than three.

The principal disadvantage of all three alternative dividers is that their tabs do not contain enough space for cross references (eg. "Ecology: see Environment and Environmental Control" or "Fares, passes: see also specific ridership groups").

A possible solution to the latter problem would be to abandon the idea of using dividers at all. Instead, regular or reinforced manila folders could be used. This method would permit users of the Key Word Index to remove and replace abstracts easily, and because the top tab runs across the entire width of the folder, there is sufficient room for both key words and their cross-references. Since no abstracts would be filed behind "descriptor" words (ie. those followed by "see"), the flaps on their folders could be removed.

?

ould require
se six paper copies

May 19, 1972

To: Mr. Hughes

From: David Lee

Re: Progress Report on UMTA Reports Library

I. SUMMARY OF WORK COMPLETED TO DATE:

1. All reports on hand have been indexed and catalogued.

2. A total of 725 abstracts have been written and typed in final form.

3. A new edition of the key word list has been prepared.

4. All completed abstracts have been reviewed for length. More than 20 were edited and re-typed in order to accommodate placing NTIS order numbers beneath the text.

5. A prototype for the publication of our abstracts and indexes has been prepared for review.

II. SUMMARY OF WORK TOWARDS OBTAINING N.T.I.S. ORDER NUMBERS FOR ALL DOCUMENTS:

1. Of the 725 total abstracts written to date, 585 are for reports which either have an NTIS order number already assigned or were specifically not sent to NTIS.

2. Of the remaining 140 abstracts:

   a) Seven are for new URT reports on which a decision (whether or not they should be sent to NTIS) needs to be made.

   many are too old - others sent to Alice

   b) 106 are for reports of which we do not have a duplicate copy.

   do not send in

   c) 18 are for reports of which we do have duplicate copies, but which are more than two years old. Under current NTIS policy, accession numbers will not be assigned to reports which are two or more years old unless the agency specifies in writing that a demand of approximately ten copies per year is expected.

   3 sent to Alice - others too old.

   d) 9 are for reports of which we do have duplicate copies, and which are less than two years old. All necessary preparations for sending these reports to NTIS have been completed.

3. Twenty reports (available from NTIS) which were found missing from our inventory have been ordered.

III. SUMMARY OF WORK TOWARDS OPERATIONALIZING THE UMTA REPORTS LIBRARY

1. All basic elements of the manual retrieval system have been completed.

2. The following additional work must be completed:

   a) Index numbers on approximately 1/2 of all red and white cards must be typed.

   b) The new edition of the Key Word List must be typed and copied.

   c) Headings must be typed on the Key Word Index folders.

   d) NTIS order numbers, where applicable, must be typed on the abstracts.

   e) Abstracts must be Xeroxed and placed in their appropriate Key Word Index folders. [It is recommended that at least two duplicate sets of all abstracts be reproduced.]

   f) All materials needed for the publication of our abstracts and indexes must be typed in final form.

   g) New dividers for all six boxes of red, white, and blue cards must be typed.

   h) Alphabetizing in the red and white card files must be checked.

3. It is estimated that with a certain amount of clerical assistance, the entire retrieval system can be operationalized by July 1, 1972 -- or sooner if necessary.

IV. I am leaving after today for two weeks leave. My first day on the job after this time will be June 5, 1972. At that time, I shall begin working full-time until the end of the summer.

NOTE: FOUR ATTACHMENTS

'T R (QU)

READ INSTRUCTIONS ON REVERSE — NO CARBON REQUIRED — PAGE 1 OF 2 PAGES

DEPARTMENT OF TRANSPORTATION

PROCUREMENT REQUEST PROCESS RAPIDLY

PROCUREMENT REQUEST NO. DOT-UT-20029

DATE RECEIVED 6-1-72

1. NAME, PHONE NUMBER, AND ROUTING SYMBOL OF PERSON TO CONTACT
Philip G. Hughes ext. 60080 - UMTA - URD-50

2. TYPE OF REQUEST (Check one)
A. [X] NEW REQUEST
B. [ ] CHANGE TO PENDING PR NO. ____
C. [ ] MODIFICATION TO CONTRACT OR ORDER NO. ____

3. ORIGINATING OFFICE DATA
[redacted]

4. ADDITIONAL INFORMATION (Suggested supply sources, security data, etc.)
Transcendental Corporation
1010 Vermont Ave., N.W.
Washington, D. C. (Minority Small Business)

5. APPROVALS

APPROVING OFFICIALS (A)	ROUTING SYMBOL (B)	DATE (C)	INTERNAL ROUTING INITIALS (D)	INTERNAL ROUTING ROUTING SYMBOL (E)
(1) AUTHORIZED REQUISITIONER R. A. Hemmes	5/4/72 URD-1	4/28/72	RAH	URD-50
(2) ACCOUNTING CERTIFICATION OFFICER W. H. Boswell	UAD-1	5/6/72		
(3)				
(4)				

6. CONSIGNEE AND DESTINATION
Office of RD&D
Urban Mass Transportation Administration
Department of Transportation
7th & D Streets, S.W.
Washington, D. C. 20590

7. DATE(S) REQUIRED
ASAP

8. GOVERNMENT FURNISHED PROPERTY
[ ] YES [X] NO (If "YES," see par. 8 of Instructions on reverse.)

9. DESCRIPTION OF ITEMS OR SERVICES

ITEM NO. (A)	ITEM OR SERVICE (Include Specifications and Special Instructions) (B)	QUANTITY (C)	UNIT (D)	ESTIMATED COST UNIT (E)	ESTIMATED COST AMOUNT (F)
1	Contractor shall provide Services to perform the following tasks: 1. Set up and make operational a manual key-word retrieval system for approximately 600 report abstracts. This effort will include but not be limited to addition of NTIS accession numbers to abstracts, revise approximately 25 abstracts, prepare keyword dividers. 2. Prepare original document of reproduceable quality of Indexed Volume of UMTA report abstracts. This effort will include but not be limited to preparing Keyword index containing listing of reports (approximately 400), title index, author/organization index, verification of current and complete information on 3 sets of card index files (approximately 600 cards each), narrative description of the use and purpose of the document and number of document pages.	4 man-months			$6,000

TOTAL ESTIMATED COST $ 6,000

10. ACCOUNTING DATA
W2-01-60-01.02.00-67000-2590

FORM DOT F 4200.1 (3-71)

INSTRUCTIONS FOR PREPARATION OF PROCUREMENT REQUEST (PR)

GENERAL—Leave upper righthand corner blank. These spaces are for procurement office use. Complete all applicable blanks. If additional space is needed, use blank paper or Form DOT F 4200.2, Procurement Request Continuation Sheet.

ITEM 1—NAME, PHONE NUMBER, AND ROUTING SYMBOL of person to contact concerning the request.

ITEM 2—TYPE OF REQUEST

A. Check "New Request" if this is an initial request.

B. If this is a change to a pending PR, check box, and enter PR number assigned by procurement office.

C. If PR is for modifying an existing order or contract, check box, and enter order or contract number assigned by procurement office.

ITEM 3—ORIGINATING OFFICE DATA. Enter any internal data needed by the office preparing the PR, such as internal PR number, project or task number, etc.

ITEM 4—ADDITIONAL INFORMATION. Use this space to indicate suggested sources of supply, any applicable security classification, or for other instructions or data. If the items or services are proposed to be obtained from only one source of supply, furnish a "sole source" justification with the PR.

ITEM 5—APPROVALS.

COL. A—APPROVING OFFICIALS. Enter typed name and title for approving officials as indicated below:

(1) Authorized Requisitioner. Signature of person authorized to approve request for procurement action.

(2) Accounting Certification Officer. Signature of accounting representative having authority to certify that funds are available for the procurement.

(3) and (4) For use as may be required by local instructions.

COL. B—ROUTING SYMBOL. Self-explanatory.

COL. C—DATE. Give date of approval.

COL. D AND COL. E—INTERNAL ROUTING. Use these blocks only if internal review and intermediate approvals are required by approving officials.

ITEM 6—CONSIGNEE AND DESTINATION. Enter the name of the consignee and address location where requested items are to be delivered or services are to be performed. If shipments are to be made to more than one destination, enter the words "Multiple Destinations" in this block and attach a list of the consignee addresses where shipments are to be made.

ITEM 7—DATE(S) REQUIRED. Enter the date(s) that requested items are required. Do not use "as soon as possible" or similar terms. When the requested items and/or services are required sooner than the normal procurement lead-time would permit, a written justification should be attached to the PR. The justification should state why expedited handling is necessary and the probable results if the indicated delivery date(s) is not met.

ITEM 8—GOVERNMENT FURNISHED PROPERTY. If "Yes" is checked, describe each item to be furnished by the Government and state its acquisition cost (estimated if unattainable), and state the use to be made of the item(s) by the contractor.

ITEM 9—DESCRIPTION OF ITEMS OR SERVICES.

COL. A—ITEM NO. Enter item numbers in numerical sequence.

COL. B—ITEM OR SERVICE. Identify applicable specifications, drawings, and purchase descriptions, and attach a copy of each. Provide Federal Stock Numbers if known and manufacturer's part number, if applicable.

If a brand name or equal product, state the commercial brand name and model, and set forth those characteristics essential to Government needs.

Furnish any special shipping and routing instructions, and any preservation, packaging, packing, and marking instructions.

Furnish any other instructions, such as inspection and testing requirements.

COL. C—QUANTITY. Enter quantity of each item requested.

COL. D—UNIT. The measure, such as "each" or "set."

COL. E—ESTIMATED UNIT COST. Use the most current price available, i.e., the reasonable "going market price," as may be obtainable from commercial catalogs, price lists, bulletins, reports, trade journals and the like. If the requested item or service has been previously procured, and no other more current pricing data is available, use last known purchase price.

COL. F—ESTIMATED TOTAL COST. Enter the total estimated cost for each item, and grand total cost for all items.

ITEM 10—ACCOUNTING DATA. Enter the appropriation(s) under which funds have been made available, and any other accounting data required.

☆ U.S. GOVERNMENT PRINTING OFFICE: 1971—O-422-610

NO CARBON REQUIRED

PROCUREMENT REQUEST – CONTINUATION SHEET

21. PROCUREMENT REQ. NO.

PRN

9

13. ITEM NO.	14. DESCRIPTION OF ARTICLES AND/OR SERVICES *(Including specifications and other pertinent data)*	15. QUANTITY	16. UNIT	17. ESTIMATED COST *a.* UNIT	*b.* TOTAL

☆ U. S. GOVERNMENT PRINTING OFFICE: NOV. 1963 – 707-908

READ INSTRUCTIONS ON REVERSE — NO CARBON REQUIRED

DEPARTMENT OF TRANSPORTATION

PROCUREMENT REQUEST
PROCESS RAPIDLY

PROCUREMENT REQUEST NO.

DATE RECEIVED

1. NAME, PHONE NUMBER, AND ROUTING SYMBOL OF PERSON TO CONTACT

Pallin P. Hughes ext. 60000 - UMTA - UMD-10

3. ORIGINATING OFFICE DATA

OC-OOC-1

4. ADDITIONAL INFORMATION (Suggested supply sources, security data, etc.)

Transcendental Corporation
1010 Vermont Ave., N.W.
Washington, D. C. (Minority Small Business)

2. TYPE OF REQUEST (Check one)

A. [X] NEW REQUEST

B. [ ] CHANGE TO PENDING PR NO. _____

C. [ ] MODIFICATION TO CONTRACT OR ORDER NO. _____

5. APPROVALS

APPROVING OFFICIALS (A)	ROUTING SYMBOL (B)	DATE (C)	INTERNAL ROUTING INITIALS (D)	INTERNAL ROUTING ROUTING SYMBOL (E)
(1) AUTHORIZED REQUISITIONER				
T. A. Yemma	UTD-1			
(2) ACCOUNTING CERTIFICATION OFFICER				
W. H. Boswell	UAO-1			
(3)				
(4)				

6. CONSIGNEE AND DESTINATION

Office of RD&D
Urban Mass Transportation
Administration
Department of Transportation
7th & 8 Streets, S.W.
Washington, D. C. 20590

7. DATE(S) REQUIRED

ASAP

8. GOVERNMENT FURNISHED PROPERTY

[ ] YES [X] NO (If "YES," see par. 8 of Instructions on reverse.)

9. DESCRIPTION OF ITEMS OR SERVICES

ITEM NO. (A)	ITEM OR SERVICE (Include Specifications and Special Instructions) (B)	QUANTITY (C)	UNIT (D)	ESTIMATED COST UNIT (E)	ESTIMATED COST AMOUNT (F)
1	Contractor shall provide Services to perform the following tasks: 1. Set up and make operational a manual key-word retrieval system for approximately 600 report abstracts. This effort will include but not be limited to addition of NTIS accession numbers to abstracts, revise approximately 25 abstracts, prepare keyword dividers. 2. Prepare original document of reproducable quality of Indexed Volume of UMTA report abstracts. This effort will include but not be limited to preparing Keyword index containing listing of reports (approximately 400), title index, author/organization index, verification of current and complete information on 3 sets of card index files (approximately 300 cards each), narrative description of the use and purpose of the document and number of document pages.	4 man-months			14,000

TOTAL ESTIMATED COST $ 14,000

10. ACCOUNTING DATA

FORM DOT F 4200.1 (3-71)

INSTRUCTIONS FOR PREPARATION OF PROCUREMENT REQUEST (PR)

GENERAL—Leave upper righthand corner blank. These spaces are for procurement office use. Complete all applicable blanks. If additional space is needed, use blank paper or Form DOT F 4200.2, Procurement Request Continuation Sheet.

ITEM 1—NAME, PHONE NUMBER, AND ROUTING SYMBOL of person to contact concerning the request.

ITEM 2—TYPE OF REQUEST

A. Check "New Request" if this is an initial request.

B. If this is a change to a pending PR, check box, and enter PR number assigned by procurement office.

C. If PR is for modifying an existing order or contract, check box, and enter order or contract number assigned by procurement office.

ITEM 3—ORIGINATING OFFICE DATA. Enter any internal data needed by the office preparing the PR, such as internal PR number, project or task number, etc.

ITEM 4—ADDITIONAL INFORMATION. Use this space to indicate suggested sources of supply, any applicable security classification, or for other instructions or data. If the items or services are proposed to be obtained from only one source of supply, furnish a "sole source" justification with the PR.

ITEM 5—APPROVALS.

COL. A—APPROVING OFFICIALS. Enter typed name and title for approving officials as indicated below:

(1) Authorized Requisitioner. Signature of person authorized to approve request for procurement action.

(2) Accounting Certification Officer. Signature of accounting representative having authority to certify that funds are available for the procurement.

(3) and (4) For use as may be required by local instructions.

COL. B—ROUTING SYMBOL. Self-explanatory.

COL. C—DATE. Give date of approval.

COL. D AND COL. E—INTERNAL ROUTING. Use these blocks only if internal review and intermediate approvals are required by approving officials.

ITEM 6—CONSIGNEE AND DESTINATION. Enter the name of the consignee and address location where requested items are to be delivered or services are to be performed. If shipments are to be made to more than one destination, enter the words "Multiple Destinations" in this block and attach a list of the consignee addresses where shipments are to be made.

ITEM 7—DATE(S) REQUIRED. Enter the date(s) that requested items are required. Do not use "as soon as possible" or similar terms. When the requested items and/or services are required sooner than the normal procurement lead-time would permit, a written justification should be attached to the PR. The justification should state why expedited handling is necessary and the probable results if the indicated delivery date(s) is not met.

ITEM 8—GOVERNMENT FURNISHED PROPERTY. If "Yes" is checked, describe each item to be furnished by the Government and state its acquisition cost (estimated if unattainable), and state the use to be made of the item(s) by the contractor.

ITEM 9—DESCRIPTION OF ITEMS OR SERVICES.

COL. A—ITEM NO. Enter item numbers in numerical sequence.

COL. B—ITEM OR SERVICE. Identify applicable specifications, drawings, and purchase descriptions, and attach a copy of each. Provide Federal Stock Numbers if known and manufacturer's part number, if applicable.

If a brand name or equal product, state the commercial brand name and model, and set forth those characteristics essential to Government needs.

Furnish any special shipping and routing instructions, and any preservation, packaging, packing, and marking instructions.

Furnish any other instructions, such as inspection and testing requirements.

COL. C—QUANTITY. Enter quantity of each item requested.

COL. D—UNIT. The measure, such as "each" or "set."

COL. E—ESTIMATED UNIT COST. Use the most current price available, i.e., the reasonable "going market price," as may be obtainable from commercial catalogs, price lists, bulletins, reports, trade journals and the like. If the requested item or service has been previously procured, and no other more current pricing data is available, use last known purchase price.

COL. F—ESTIMATED TOTAL COST. Enter the total estimated cost for each item, and grand total cost for all items.

ITEM 10—ACCOUNTING DATA. Enter the appropriation(s) under which funds have been made available, and any other accounting data required.

☆ U.S. GOVERNMENT PRINTING OFFICE: 1971—O-422-610

NO CARBON REQUIRED

PROCUREMENT REQUEST – CONTINUATION SHEET

21. PROCUREMENT REQ. NO.

PRN

13. ITEM NO.	14. DESCRIPTION OF ARTICLES AND/OR SERVICES (*Including specifications and other pertinent data*)	15. QUANTITY	16. UNIT	17. ESTIMATED COST a. UNIT	b. TOTAL

☆ U. S. GOVERNMENT PRINTING OFFICE: NOV. 1963 — 707-908

UMTA Information Dissemination Operation

MAY 2 1972

Philip G. Hughes

Robert A. Hemmes

The following information is given to update status of the UMTA Information Dissemination Operation.

Abstracting of UMTA grant/contract reports for completed projects is essentially current. Approximately 600 abstracts have been prepared. A key word list has been completed. Work has been completed to determine if reports not sent to NTIS should in fact be sent. About 150 have been recommended to go to NTIS. A manual retrieval system will be set up and made available initially for UMTA internal use. Format ideas for publication of a book containing the abstracts have been prepared. The books will be made available to the public for reference use and to locate and order from NTIS, UMTA reports of interest.

A Procurement Request is being processed for effort to set up the retrieval system and abstract book.

A decision will be made as to whether a machine retrieval capability should be implemented to provide service to groups outside UMTA and to support data bank growth beyond the limitations of the manual system.

The use of DOT Order 1700.18 for report preparation is being looked into. If satisfactory, then it will not be necessary to prepare a separate spec.

/s/ original signed by

cc:
UMTA File
URD Chron
URD-50
URD-50:HUGHES:taf:5-1-72

CONCURRENCES

RTG. SYMBOL	INITIALS/SIG.	DATE

Form DOT F 1320.65 (4-67)

OFFICIAL FILE COPY

MAY 2 1972

UMTA Information Dissemination Operation

Phillip S. Hughes

Robert E. Dunmore

The following information is given to update status of the UMTA Information Dissemination Operation.

Extraction of UMTA requirements reports for remedial projects is essentially current. Approximately 150 extracts have been processed. A few more lists has been completed. Work has been completed to determine if reports are sent to UMTA already in fact or sent. About 150 have been processed so far in 1972.

A manual retrieval system will be set up and made available initially for UMTA internal use. Formal lines for publication of a report containing the abstracts have been developed. The report will be made available to the public for reference use and to locate and order from NTIS. UMTA reports of interest.

A Procurement Request is being processed for efforts to set up the retrieval system and internal use.

A decision will be made as to whether a monthly reminder should be implemented to provide reports to groups outside UMTA and to support data bank groups beyond the initiation of the manual system.

The use of PPP Report 1700.1A for report processing is being looked into. If satisfactory, then it will be necessary to develop a separate system.

Dr. Robert E. Dunmore

cc:
UMTA File
UPP Chron
UPP-30
UPP-30:RUNGUTS:MAF:5-1-72

GENERAL SERVICES

RTG. SYMBOL	INITIALS/SIG.	DATE
RTG. SYMBOL	INITIALS/SIG.	DATE
RTG. SYMBOL	INITIALS/SIG.	DATE
RTG. SYMBOL	INITIALS/SIG.	DATE
RTG. SYMBOL	INITIALS/SIG.	DATE
RTG. SYMBOL	INITIALS/SIG.	DATE
RTG. SYMBOL	INITIALS/SIG.	DATE
RTG. SYMBOL	INITIALS/SIG.	DATE
RTG. SYMBOL	INITIALS/SIG.	DATE

Form DOTF 1720.05 (Rev.)

OFFICIAL FILE COPY

UMTA Information Dissemination Operation

APR 7 1972

Philip G. Hughes

Robert A. Hemmes

The following information is given regarding current status of the UMTA Information Dissemination Operation (I have been referring to the effort in this manner until something more suitable is evolved). This was requested by you for use in the House hearings.

Abstracting of UMTA grant/contract reports for completed projects is essentially current. Approximately 600 abstracts have been prepared. A key word list has been completed. Currently work is under way to determine if any reports not sent to NTIS should in fact be sent. Upon completion of this task, a manual retrieval system will be set up and made available initially for UMTA internal use. Format ideas for publication of a book containing the abstracts are being prepared. The books will be made available to the public for reference use and to locate and order from NTIS, UMTA reports of interest.

A contract will be placed to prepare specifications to guide contractors/grantees in the formating of reports, abstracting and key wording.

A decision will be made in the next several weeks as to whether a machine retrieval capability should be implemented to provide service to groups outside UMTA and to support data bank growth beyond the limitations of the manual system.

The pros, cons and expense of preparing a motion picture briefing film on UMTA RD&D projects was looked into but the concept has been rejected by the Administrator.

Preparations are underway for a second annual URT research meeting June 1st and 2nd. Fourteen papers will be presented by as many schools. A panel discussion will be included on training aspects of the program.

/s/ Philip G. Hughes

cc:
UMTA File
URD Chron
URD-50
URD-50:HUGHES:taf:4-7-72

CONCURRENCES

RTG. SYMBOL	INITIALS/SIG.	DATE

April 28, 1972

To: Mr. Hughes

From: David Lee

Re: Progress Report, week of April 24-28

The following work was completed:

1. Eleven new reports were catalogued, indexed, abstracted, keyworded, and shelved. Of this number, five abstracts were written according to the regular 400-word specification. The other six were prepared for a maximum length of 200 words.

2. Approximately 40 abstracts written in the last month were proofread and are now ready for filing in final-form.

3. All materials were packed and labled in preparation for our move to a new office.

April 24, 1972

To: Mr. Hughes

From: David Lee

Re: Progress Report, week of April 17-21

During this week, the following work was completed:

- Seventeen new reports were catalogued, indexed, abstracted, and shelved.

April 17, 1972

To: Mr. Hughes

From: David Lee

Re: Progress report, week of April 10-14

The following work was completed:

1. Eleven new reports were catalogued, indexed, abstracted, and key-worded.

2. Copies of abstracts for which we do not have NTIS accession numbers were divided according to project manager for distribution.

APR 12 1972

Relocation of David Lee/Report Files

Philip G. Hughes

Jim Webb

I am confirming my understanding that the space in room 9200 must be vacated by the end of April and that replacement space will be available starting at that time in the DOT Library on the second floor.

I would appreciate your making the necessary arrangements to move the contents of room 9200 down to the second floor and also to have the telephone transferred.

At such time as you have scheduled the move, please let me know the date and the approximate time. If I can provide any information or be of help, please let me know.

cc:
UMTA File
URD Chron
URD-1 (Goss)
URD-50
URD-50:HUGHES:taf:4-11-72

CONCURRENCES	
RTG. SYMBOL	
INITIALS/SIG.	
DATE	
RTG. SYMBOL	
INITIALS/SIG.	
DATE	
RTG. SYMBOL	
INITIALS/SIG.	
DATE	
RTG. SYMBOL	
INITIALS/SIG.	
DATE	
RTG. SYMBOL	
INITIALS/SIG.	
DATE	
RTG. SYMBOL	
INITIALS/SIG.	
DATE	
RTG. SYMBOL	
INITIALS/SIG.	
DATE	
RTG. SYMBOL	
INITIALS/SIG.	
DATE	

RTG. SYMBOL	
INITIALS/SIG.	
DATE	

APR 12 1972

Request for Additional File Cabinets

Philip G. Hughes

Betty Goss

I would like to request that you obtain an additional five drawer file cabinet for use in conjunction with the UMTA Information Dissemination Operation. One of the actions being implemented is the establishment of a manual key word retrieval system for the 600 reports that have been abstracted over the past few months. In order to set up the retrieval system, approximately three shelves of the file cabinet will be required. The five drawer cabinet is requested so that the two additional drawers can be available for new final reports arriving in the future as grant and contract projects are completed.

/s/ Philip G. Hughes

cc:
UMTA File
URD Chron
URD-50
URD-50:HUGHES:taf:4-11-72

CONCURRENCES	
RTG. SYMBOL	
INITIALS/SIG.	
DATE	
RTG. SYMBOL	
INITIALS/SIG.	
DATE	
RTG. SYMBOL	
INITIALS/SIG.	
DATE	
RTG. SYMBOL	
INITIALS/SIG.	
DATE	
RTG. SYMBOL	
INITIALS/SIG.	
DATE	
RTG. SYMBOL	
INITIALS/SIG.	
DATE	
RTG. SYMBOL	
INITIALS/SIG.	
DATE	
RTG. SYMBOL	
INITIALS/SIG.	
DATE	

CONCURRENCES

RTG. SYMBOL	
INITIALS/SIG.	
DATE	
RTG. SYMBOL	
INITIALS/SIG.	
DATE	
RTG. SYMBOL	
INITIALS/SIG.	
DATE	
RTG. SYMBOL	
INITIALS/SIG.	
DATE	
RTG. SYMBOL	
INITIALS/SIG.	
DATE	
RTG. SYMBOL	
INITIALS/SIG.	
DATE	
RTG. SYMBOL	
INITIALS/SIG.	
DATE	

April 10, 1972

To: Mr. Hughes

From: David Lee

Re: Progress report, week of April 3-7, 1972

The following work was completed:

1. The abstracts of reports missing NTIS accession numbers were cross-checked against the Administration card file. Order numbers for a total of more than 70 reports were identified, and these numbers have been recorded on the appropriate blue cards.

2. The card file was also cross-checked against all blue cards to identify any reports available from NTIS which were not also shelved in the UMTA reports library. A total of 12 such reports were identified, and some may have to be obtained from NTIS.

3. A prototype format for publication of abstracts and indexes was completed using a sample of 50 randomly selected abstracts.

4. The "Keyword Classification List" proposed by Stanford University was reviewed.

5. Five new reports were catalogued, indexed, abstracted, keyworded, and shelved.

Memo for File

Meeting: Allison, Cass, Hughes 3/23/72

Purpose: to review status and agree on future actions on UMTA Info Program

The agreed upon course of action is as follows:

1. Complete task of preparing lists of abstracted reports that are not in NTIS; review lists with respective office heads for go/no go decision on whether to send to NTIS; send approved reports to NTIS, obtain accession (PB) numbers and add to abstracts

2. Determine best way to make abstracts available (ie NTIS, GPO etc); place contract to accomplish preparation of material and formating ready for printing.

3. UMTA policy will be to announce availability to public of abstracts from the source selected in 2. Limited distribution of a free copy will be made by UMTA to a selected, list. (subsequent) New abstracts will be batched about twice a year and made available in a similar manner.

4. Prepare suitable public announcement [of availability of abstract book] for sending out over DOT mailing list or other distribution lists.

5. Prepare manual Key word retrevial system for present abstracted reports. This would include all reports whether or not they went to NTIS. Abstracts made available to the public would include only reports in NTIS. [might include in contract placed in #2]

6. Place contract to prepare specification(s) for future RD&D, Tech Study, Planning and Service Development final reports; also prepare instructions for abstract sheet preparation and Key-wording to enable contractors to prepare in future.

7. make final recommendations as to computerization of all abstracts for Key-word (machine retrevial) search capability and possible expansion in future to include non UMTA material.

PK 3/24/72

April 3, 1972

To: Mr. Hughes

From: David Lee

Re: Work completed, week of March 27-31

1. All abstracts were reviewed to determine a comprehensive listing of those for which NTIS order numbers were missing. A total of more than ~~300~~ 375± abstracts were identified.

2. Some additional work was completed on a prototype publication of abstracts and indexes.

UMTA Info Syste

March 27, 1972

To: Mr. Hughes

From: David Lee

Re: Indexing system for UMTA reports library

Per your request, I have attached a brief description of the indexing system. The index employs a three-field, alpha-numerical system [ie. #-LLL-##.##] which was selected principally for its flexibility in accommodating new reports in all areas as they become available.

The description is admittedly in a rougher form than would appear in a standard user's manual, but I hope you will find it suitable to your needs.

March 27, 1972

To: Mr. Hughes

From: David Lee

Re: Indexing system for UMTA reports library

Per your request, I have attached a brief description of the indexing system. The index employs a three-field, alpha-numerical system [ie. #-LLL-##.##] which was selected principally for its flexibility in accommodating new reports in all areas as they become available.

The description is admittedly in a rougher form than would appear in a standard user's manual, but I hope you will find it suitable to your needs.

The First Field

The first field consists of a single digit representing the functional category under which a report was generated. For the reports currently on hand, there are four such categories to reflect the four basic grant programs administered by UMTA. The assignment of first-field digits to these categories is as follows:

First-field number	1	represents	Mass Transportation Demonstrations [MTD]
" " "	2	"	Technical Studies [T9]
" " "	3*	"	Transportation Research and Development [TRD]
" " "	4	"	University Research and Training [URT]

*The numbers 3A and 3B are used to denote Research and Development Contracts [RDC] and Research and Development Grants [RDG] respectively.

In addition, the system was originally developed to include first-field designations for several categories of related documents not sponsored directly by UMTA programs. Although such documents will not be included in the initial retrieval system, the assignment of first-field digits to these categories for possible later use is as follows:

First-field number	5	represents	OPEN FOR POSSIBLE NEW UMTA CATEGORY
" " "	6	"	Other Department of Transportation
" " "	7	"	Other Federal Government agencies
" " "	8	"	Foreign countries
" " "	9	"	Conference Reports and Papers
" " "	10	"	Private, State, and Local

The Second Field

The second field consists of a series of two or more letters representing the state in which a project was undertaken. Standard abbreviations are employed except for Interstate projects for which the designation is INT. Where no state name is included in the standard UMTA project number, the second-field will be 00. Thus for the following hypothetical UMTA projects, the first and second field index numbers are:

UMTA PROJECT NUMBER	FIRST AND SECOND FIELDS IN INDEX SYSTEM
CAL-MTD-5	1-CAL
INT-MTD-15	1-INT
ILL-T9-2	2-ILL
TRD-99	3-00
PA-RDC-1	3A-PA
URT-8	4-00
DC-URT-3	4-DC

One exception to the above classification is made for documents generated by the New Systems Study which was sponsored by HUD in 1967. Because only about half of the subcontracts in the Study were assigned standard TRD project numbers, it was necessary to create a special category for all reports generated by the New Systems Study. The first and second fields for these documents are: 3-NSS.

Lastly, it is anticipated that similar second-field abbreviations would be used to identify the sponsors of related documents (should these at some later date be integrated with the present system). In these cases, second-field abbreviations might include: (6) FRA, FHWA, OST; (7) HUD, HEW, NASA; etc.

The Third Field

The third field consists of the actual number assigned by UMTA to each project. Thus, for example, in the case of CAL-MTD-5, the project number is 5; in the case of TRD-99, the project number is 99; etc. Project numbers within the New Systems Study were assigned alphabetically to each of the 16 contractors who contributed to the total Study. Because no applicable project number exists for related documents, these can be numbered 1-n chronologically. Thus for the following several UMTA project numbers, the corresponding index numbers are:

UMTA PROJECT NUMBER	INDEX NUMBER
CAL-MTD-5	1-CAL-5
INT-MTD-15	1-INT-15
ILL-T9-2	2-ILL-2
TRD-99	3-00-99
PA-RDC-1	3A-PA-1
URT-8	4-00-8
DC-URT-3	4-DC-3

The Decimal Point

To identify specific documents within the individual projects, a decimal point is placed at the end of the typical index numbers shown above. On the shelves, documents are arranged internally within binders for each project and assigned a specific number from 1-n. Whenever possible, the final report should be given number 1 and sequential documents should be numbered in order. Where documents are missing, an appropriate space in the internal numbering system whould be left open. As new documents are received for already numbered projects, they may be assigned the next highest number; it is not necessary that documents (once they have been arranged by project number) be arranged hierarchically within projects.

By way of illustration, let us assume that a technical study in Chicago, Illinois, generated four documents including a final report, an interim report, and two progress reports. Since there had been five previous technical study projects in Illinois, the UMTA project number for this particular grant was ILL-T9-6.

THE FIRST FIELD number for all four documents would be 2 because the project was a technical study [T9].

THE SECOND FIELD number for all four documents would be ILL, representing the state in which the grant was authorized.

THE THIRD FIELD number for all four documents would be 6, representing the UMTA number for that specific project.

The INDEX NUMBER for the final report, then, would be 2-ILL-6.1
The INDEX NUMBER for the interim report would be 2-ILL-6.2
The INDEX NUMBER for the first progress report 2-ILL-6.3
The INDEX NUMBER for the second progress report 2- ILL-6.4

March 27, 1972

To: Mr. Hughes

From: David Lee

Re: Abstracts of reports which do not have NTIS order numbers

The attached folders contain copies of 355 abstracts for which we do not have accession numbers from the National Technical Information Service. The folders are divided among the five functional categories in our index: (1) Demonstrations [MTD]; (2) Technical Studies [T9]; (3) Research and Development [TRD]; (4) University Research and Training [URT]; and (5) a special category [NSS] of documents generated by the 1967 New Systems Study.

Our most recent inventory of documents on hand as of February, 1972, therefore indicates that only about one-half of the reports are known to be available through the NTIS.

It must be emphasized, however, that the fairly large number of abstracts included here contains several which have already been screened and are not intended for public distribution, others which probably should be screened, and still others for which we have simply been unable to identify the NTIS number.

MAR 28 1972

Extension of Space Assignment/Release
of Room 2212A

Associate Administrator for Administration

Director of Administrative Operations, TAD-40

Attached is a memorandum from Philip Hughes, Director of UMTA's University Grant Programs, outlining a requirement for a 6-month extension in the assignment of room 9200A. We wish to reinforce this requirement.

As you know, we have had this space some 60 days, and are not scheduled to release it until April 30. This past week, we released the contractors who were using this space, and hired an individual to maintain and operate the Information Dissemination System upon which they were working. We have no space in our "natural" 9th floor boundaries to house this function with the considerable files that go with it; therefore, this request.

In a related development, we have today vacated and cleared room 2212A (in the library) which was on loan for use by UMTA contractors. We have considered the ramifications of using this room for the above requirement, but have ruled it out, feeling that 9th floor accommodations are essential. We do "thank you" for the use of room 2212A.

Your assistance in extending our "lease" on room 9200A will be greatly appreciated.

/s/ original signed by

W. H. Boswell

Attachment
JWEBB:lms:64007:3-27-72
cc: CHRON FILE-UAD-1 DAY FILE
SUBJECT FILE

MAR 2 1972

Extension of Space Assignment/Release
of Room 2212A

Associate Commissioner for Administration

Director of Administrative Operations, TAD-40

Attached is a memorandum from Philip Burkes, director of UCLA's University Grant Programs, outlining a requirement for a month extension in the assignment of room 2212A. We wish to reinforce this requirement.

As you know, we have had this space some 60 days, and are not scheduled to release it until April 30. This past week, we released the contractors who were using this space, and hired an individual to maintain and operate our Information Dissemination System upon which they were working. We have no space in our "normal" 4th floor headquarters to house this function with the consultants that had to "rent it" therefore, this request.

In a related development, we have today vacated and closed room 2212A (in the library) which was on loan for use by UCSA contractors. We have considered the ramifications of using this room for the above requirement, but have ruled it out, feeling that the floor accommodations are essential. We do "thank you" for the use of room 2212A.

Your assistance in extending our "lease" on room 2200A will be greatly appreciated.

(s) original signed by

W. H. Sowell

Attachment
cc: Ins:6A007:3-27-72
cc: CURRN FILE-CAO-1 DAY FILE
SUBJECT FILE

March 27, 1972

To: Mr. Hughes

From: David Lee

Re: Work completed during week of March 20-24

(1) A total of 18 reports received after February 4, 1972, were catalogued, indexed, abstracted, key worded, and shelved.

(2) Seven new directors for the Key Word List were identified and added to the List.

(3) The remainder of the Xeroxing of final-form abstracts was completed.

DRAFT:HUGHE)taf:3-23-72

Memorandum

Thoughts on RD&D Information Program - Set forth in the following paragraphs is an attempt to recapitulate the past and present picture of the ~~RD&D~~ UMTA Information Program and to propose a future course of action.

Purpose of the Program - The basic purpose of this program is to establish an on going mechanism to gather, make known and make available the internally and publicly documented results of certain UMTA programs.

Scope of the Program - The Program will encompass Research, Development and Demonstration, Technical Study, University Research and Training and RD&D supported Planning and Service Development, projects funded by the Urban Mass Transportation Administration.

Activity to Date - A contract with Transcendental Corporation of Washington, D. C. (8A firm) was amended to provide services to accomplish the following tasks:

1. identify, locate, catalog, index and store approximately 1,500 documents. These documents consist of RD&D, URT, Technical Study, Planning and Service Development reports, both Final and Progress.
2. develop a urban transportation key word list using the UMTA RD&D catalog, NTIS list and Thesaurus and HRB list. Review of the list by 50 plus outsiders and final edit to 260 key words with approximately 640 Directors in two lists.

reviewed with Bill Allison & Bob Cass 3/23 BH

3. abstract and key-word approximately 600 of the reports identified in #1. All abstracts are in final form and 85% xeroxed. Documents other than final reports were abstracted only if original material was included.
4. File card indexes by author, title and project number have been prepared. Typing of index numbers on 50% of cards remains to be done.
5. NTIS numbers for documents identified in #1 have been obtained where the document is in NTIS, and put on the project number file card index.

The Transcendental contract work was completed on March 15, 1972. David Lee, formerly with Transcendental has been hired by UMTA to work part time (i.e. 20-25 hrs/wk). He is abstracting, indexing and cataloging approximately 20 reports that were received after February 4. Mr. Lee is also preparing by UMTA Office, lists of abstracted reports that have not gone to NTIS and will complete typing of index numbers on file cards as time is available.

URD has been assigned responsibility for continuing the development and operation of this information dissemination program.

Action Plan - Initially a number of actions are recommended as follows:

1. Identification of abstracted reports not yet sent to NTIS to be completed; lists reviewed with appropriated program directors for concurrence with sending to NTIS and the subsequent obtaining of NTIS accession (PB) numbers.

2. Publication and distribution of the abstracts currently completed in loose-leaf single page format. /Contract out the preparation of material ready for printing - Transcendental a possible source/

3. Print ___copies of abstract book and distribute free, or make available from NTIS and announce availability (or some combination).

4. Proceed with putting existing material on FHWA Computer. Estimated cost per A. B. Hallman is $7,000 and 60 days, (Question this action).

5. Contract for the preparation of a specification(s) for RD&D, Technical Study, Planning and Service Development for final reports.

   Same for title page/abstract sheet preparation

6. Prepare system use guide for external and internal use (might contract out as part of 5).

7. Determination of who UMTA should provide key work search service for, charges (if any) and how/who to provide such service. (only if 4 implemented)

8. Arrangements for work space availability for David Lee (Have requested 6 mo. extension of room 9200 space use).

9. Establish control of usage of reports in present files to prevent loss. (David Lee presently doing)

10. Develop some scheme to make data existence available to any interested parties.

3/24 meeting David Lee

PB numbers are <u>not</u> on abstract sheets at present

abstract book should (?) have title, author, subject cross references.

Clerk can do manual system set up.

3/8/72

Abstracting

Duke Green
David Lee

status

400 word

400 abstracts final reports
and worth while material
card files for retrieving documents
Key word index (260 words for filing)
900 - 260 - Directory

Make NTIS & UMTA abstracts comparable
get common key words (UMTA, NTIS, Thesaurus)
get copies of all UMTA reports to NTIS
write spec for reports (Nothing done yet)
odd size, etc
maintain system
state of art report
First publication -
(proposal from Transcendental)?
Distribute abstracts - develope distribution list

NTIS urban transportation bibliography - put out by NTIS but paid for UMTA

DOT Library Biblog #6 (white cover)

Abstracted where original mat'l involved
David Lee is part time with Gov't

est $7,000 to put on computer

reports to NTIS
public access

A B Hallman
(Boswell)

... may 19 – June 4th
wedding 27th

Book of Abstracts
1st reports to NTIS
can determine what reports not in NTIS
station,

Include all UMTA reports

PHIL HUGHES

WSA notes on INFO program

1. RDCD w/ Phil Hughes
2. David Lee hire
3. Automate system - program
4. Write control to DA
   - design report & abstract format for UAD
   - design report & abstract format for Tech studies
   - write format for abstract book & how you find your way around
5. briefing to staff on system and its use
6. GPO

TRANSCENDENTAL CORPORATION

March 18, 1972

Mr. A. B. Hallman
Director of Management Information
System Division
Department of Transportation
400 Seventh Street, S.W.
Washington, D. C. 20590

Dear Mr. Hallman:

Please be advised that as of March 15, 1972, Transcendental Corporation, under contract DOT-UT-10013 to the Urban Mass Transportation Administration, has completed all tasks as agreeded to in the orginal contract.

However, an explanation of the completed tasks and current situation is listed below.

(1) A total of approximately 1,500 documents have been catalogued, indexed, and shelved for retrieval. This figure includes a substantial number of reports which were not on hand at the beginning of this project and which had to be systematically identified and obtained.

(2) A total of between 600 and 700 final reports, interim reports, research papers, and other documents containing unique information have been abstracted and key-worded. All abstracts are now in final form; approximately 85% of these have been xeroxed to guarantee that duplicate copies are available.

(3) Three card file indexes have been constructed to permit manual retrieval of documents by author (both persons and organizations), title, and project number. Each card contains all relevant bibliographic information; the typing of index numbers on approximately 50% of the cards remains to be completed.

(4) An urban mass transportation key-word subject list has been developed and edited nine times to accommodate new concepts in the literature and the recommendations of more than 50 outside sources. The total list contains nearly 900 entries of which approximately 260 will have abstracts filed behind them.

1010 Vermont Avenue, N.W.
Suite 416
Washington, D.C. 20001
(202) 628-1470

1629 K Street, N.W.
Suite 520
Washington, D.C. 20006
(202) 296-7984

(5) Accession numbers for documents available through the National Technical Information Service, where available, have been identified and applied to the project number card file index.

We believe that one indication of the effectiveness of this system is the large number of persons both within UMTA and from other organizations who have already obtained information about UMTA programs by using this library resource. The comments received from reviewers of the Key Word List ("The UMTA Thesaurus") have been universally favorable.

It has been a pleasure serving you on this contract.

Sincerely,

Marion O. Greene, Jr.
President

AC Motors: see Propulsion Systems, electric

Acceleration: see Speed and Speed Control

Access,

planning and control
roads: see Highway, types

Accidents: see Safety

Acoustics: see Noise and Noise Control

Acquisition: see Public Ownership

Acquisition, land: see Right-of-Way; see Land Use; see Land Acquisition

Activity Center: see Center City

Adhesion: see Wheels; see Tracks and Trackage; see Brakes and Braking, inclusive

Adjacent Property: see Land Use

Administration: see Management, inclusive; see Government, inclusive

Advertising and Promotion

Aerodynamics

Aerial Structures

Age: see also Elderly; see also Youth

Air Conditioning

Air Cushion Vehicle

Air Pollution: see also Environment and Environmental Control

Aircraft,

VTOL
STOL
traffic control

Airport,

access
planning and operation

Alden Capsule Transit System: see People Movers, Alden StaRRcar

used only to Editor Director

Alden StaRRcar: see People Movers, Alden StaRRcar

Algorithms

Allocations and Allocation Models: see Budgets and Budget Planning

Alternating Current Motors: see Propulsion Systems, Electric

Aluminum: see Rail, Materials

Amortization: see Land Use

Analog Systems: see Computer, programming

Anti-Pollution Devices: see Air Pollution; see Environment and Environmental Control; see Instrumentation

Articulated Buses: see Bus, design

Auto Intercept: see Private Transportation, automobile; see Bus, commuter

Attitudes of Passengers: see Ridership

Automatic Headway Sensing: see Headways; see Sensors

Automatic Vehicle Monitoring: see Vehicle, monitoring

Automobiles: see Private Transportation, automobiles

BART (Bay Area Rapid Transit)

Batteries and Cells

Beds: see Roadbeds

Behavior Patterns: see Ridership; see Modal Split

Belt Conveyors: see Conveyors

Benefit-Cost Analysis: see also Quality Control

Bi-Modal Systems: see also Interfaces; see also Dual-Mode Systems

Bibliographies

this is a director

Bond Issues: see Financing Mass Transportation; see Government, urban

this is a Key word

Boring and Boring Machines: see also Tunnels and Tunneling

Brakes and Braking,
- air
- disc
- dynamic
- friction
- hydraulic
- pneumatic
- regenerative

this is total of 8 Key words

Bridges: see Overpasses

Budgets and Budget Planning

Bus,

articulated: see Bus, design
busway: see also Guideways
commuter
computer routing: see Computer, applications; see Routes and Routing
computer scheduling: see Computer, applications; see Schedules and Scheduling
cost
crime: see Crime and Crime Prevention
demand-responsive: see Demand-Responsive Systems, inclusive
design: see also Vehicle, design
Dial-A-Bus: see Demand-Responsive Systems, Dial-A-Ride
driver
exhaust control: see Air Pollution
express: see also Bus, priorities
fares: see Fares, inclusive
feeder: see also Bi-Modal Systems
information: see Information Aids
inner city: see Inner City
interc ity (between two or more greater metropolitan areas)
intracity (within one greater metropolitan area)
jitney
lanes: see Bus, priorities
maintenance: see Maintenance, inclusive
minibus
priorities: see also Lane, reserved
private: see Private Transportation, bus
propulsion: see Propulsion Systems, inclusive
rapid transit
routing: see Routes and Routing
run-cutting: see Schedules and Scheduling
schedules: see Schedules and Scheduling
school bus
scrip: see Fares, collection
shuttle: see Bus, feeder; see Bus, jitney
Skylounge: see Aircraft, VTOL
stations and shelters
transfers: see also Fares, inclusive; see also Trip Generation

Busway: see Bus, busway

Business Districts: see Center City; see Suburbs, business districts

Cable Car: see People Movers, cable car

Cabs: see Private Transportation, taxicabs

Capital Formation: see Financing Mass Transportation

Car Pools: see Private Transportation, car pools

Carbon Dioxide: see Air Pollution

Carbon Monoxide: see Air Pollution

Cargo Vehicles and Cargo Handling: see Freight Movement

Cars: see Private Transportation, automobiles

CARS (Computer-Aided Routing System): see Routes and Routing; see Demand Responsive Systems

Carveyor: see People Movers, Carveyor

Catalytic Muffler: see Mufflers

Cells: see Batteries and Cells

Cement: see Highway, surfaces; see Construction, materials; see Rail, materials

Census: see Demography

Center City

Central Business District: see Center City

Central City: see Center City; see Inner City

Citizen Participation: see Community Response

City Government: see Government, urban

Circulation Systems: see Air Conditioning; see Heating; see Distribution Systems

Codes and Coding: see also Computer, programming

Collection and Distribution Systems: see Distribution Systems

Collection of Fares: see Fares, collection

Comfort: see Vehicle, design

Commercial Vehicles: see Freight Movement

Common Carriers: see Freight Movement

Communications

Community Development: see Urban Development, inclusive

Community Planning: see Urban Development, inclusive

Community Relations: see Public Relations

Community Response

Commuter Bus: see Bus, commuter

Commuter Railroad: see Rail, commuter

Computer,
applications
programming

Computer Routing and Scheduling: see Computer, applications; see Routes and Routing; see Schedules and Scheduling

Concrete: see Highway, surfaces; see Construction, materials; see Rail, materials

Condemnation: see Urban Development, renewal

Congestion: see Traffic, congestion

Consolidation: see Public Ownership

Construction,
- contracts
- cost
- equipment
- materials

Consumer Surveys: see Surveys; see Ridership

Contact Rail: see Tracks and Trackage

Contracts and Contractors: see Construction, inclusive

Controlled Access: see Access, planning and control

Controversies: see Government, inclusive

Conversion Devices: see Instrumentation

Conveyors

Cooling Systems: see also Air Conditioning

Copper: see Rail, materials

Core City: see Center City

Core Drilling: see Boring and Boring Machines

Corridors

Cost Allocations: see Budgets and Budget Planning

Cost-Effectiveness Analysis: see Benefit-Cost Analysis

Counties and County Government: see Government, county

Counts and Counters: see Passenger Counters

Couplings: see also Linkages

Crime and Crime Prevention

Crossings and Intersections: see Intersections and Crossings

Cirricula: see Universities

Curves and Curvatures

Cybernetics: see Computer, inclusive

Cycles: see Private Transportation, cycles

Damping: see Noise and Noise Control; see Wheels; see Tracks and Trackage

DART: Demand-Actuated Road Transit: see Demand-Responsive Systems

Dashaveyor Transit System: see People Movers, Dashaveyor

Data Analysis: see Quantitative Analysis

Data Collection: see Surveys

Data Processing: see Computer, inclusive

Data Recording: see Surveys; see Instrumentation

Data Retrieval: see Computer, inclusive

Data Storage: see Computer, inclusive

Day Rates: see Fares, cost determination

DC Motors: see Propulsion Systems, electric

Delay Time: see Headways; see Time Costs

Delivery Service: see Freight Movement

Demand-Actuated Systems: see Demand-Responsive Systems; see Personal Rapid Transit

Demand-Responsive Systems,
    Dial-A-Ride
    Genie Transit System

Demography: see also Center City; see also Urban Development, inclusive

Density: see Demography

Depreciation: see also Urban Development, renewal

Destination: see Trip Generation

Deterioration: see Depreciation

Detours: see Traffic, control; see Traffic, congestion

Dial-A-Bus: see Demand-Responsive Systems, Dial-A-Ride

Dial-A-Ride: see Demand-Responsive Systems, Dial-A-Ride

Diesel Engines: see Propulsion Systems, diesel

Diesel Fuel: see Fuel, types

Digital Computers: see Computer, programming

Digital Systems: see Computer, programming

Direct Current Motors: see Propulsion Systems, electric

Disaster Preparedness: see Emergency Vehicles and Service

Disc: see Brakes and Braking, disc

Discriminate Analysis: see Quantitative Analysis

Dislocations: see Relocation

Distribution Systems: see also People Movers, inclusive

Distribution, power: see Power Distribution

Distribution, land: see Land Use

Divided Highways: see Highway, types; see Lane Separation

Drag: see also Aerodynamics

Drilling: see Boring and Boring Machines; see Tunnels and Tunneling

Driver: see Private Transportation, driver; see Bus, driver

Dual-Mode Systems: see also Bi-Modal Systems

Ecology: see Environment and Environmental Control

Economic Analysis: see Quantitative Analysis

Education: see Universities

Efficiency: see Quality Control

Elderly

Electric Automobiles: see Propulsion Systems, electric

Electric Batteries: see Batteries and Cells

Electric Locomotives: see Rail, rolling stock; see Propulsion Systems, electric

Electric Propulsion: see Propulsion Systems, electric

Electric Railroads and Railroad Vehicles: see Rail, rolling stock; see Propulsion Systems, electric

Electrolytic Cells: see Batteries and Cells

Electronic Vehicle Guidance: see also Headways; see also Sensors

Elevated Highways: see Highway, types

Elevation: see Topography

Elevators

Emergency Vehicles and Services

Empirical Equations and Methods: see Quantitative Analysis

Employment,
distance: see Trip Generation

Energy Storage: see Batteries and Cells

Engines: see Propulsion Systems, inclusive

Environment and Environmental Control: see also Air Pollution; see also Noise and Noise Control; see also Land-Use; see also Urban Development, inclusive; see also Crime and Crime Prevention

Equipment, cost and maintenance: see specific equipment; see Maintenance, equipment

Escalators: see Conveyors

Ethnic Groups: see Race

Exclusive Bus Lanes: see Bus, priorities

Exhaust Gases and Control: see Air Pollution

Express Buses: see Bus, express

Express Lanes: see Bus, priorities

Expressways: see Highway, types

External Combustion Engines: see Propulsion Systems, external combustion

Factor Analysis: see Quantitative Analysis

Fares,
collection
cost determination
passes: see also specific ridership groups; see also Fares, reduction
reduction

Fasteners and Fastenings

Federal Government: see Government, Federal

Feeders and Feeder Service: see Bus, feeder; see Bi-Modal Systems

Ferries: see also Bus, jitney

Fiber Glass: see Construction, materials; see Rail, materials

Fills

Financing Highways: see Highway, financing

Financing Mass Transportation

Fire Prevention and Control

Fixed Time Traffic Signals: see Signs and Signals

Flanges

Flexible Pavements: see Highway, surfaces

Flow, traffic: see Traffic, flow

Fluids and Fluid Mechanics

Flywheels

FORTRAN: see Computer, programming

Foundations, structural

Four-Lane Highways: see Highway, types

Free Transit Systems: see Fares, cost determination

Freeways: see Highway, types

Freight Service and Handling: see Freight Movement

Freight Movement

Frequencies, radio: see Communications

Frequencies, scheduling: see Headways; see Schedules and Scheduling

Fringe Area: see Demography; see Urban Development, inclusive

Frontage Roads: see Highway, types

Fuel,
- cells
- consumption
- exhaust: see Air Pollution
- storage and supply: see also Batteries and Cells
- types

Fumes: see Air Pollution

Games and Game Theory: see also Computer, inclusive

Garages: see Parking, facilities; see Maintenance, facilities

Gas Turbines: see Propulsion Systems, turbines

Gasoline Engines: see Propulsion Systems, internal combustion

General Electric Aerial Transport System: see People Movers, General Electric Aerial Transport

Hill Climbing

Horsepower: see Propulsion Systems, horsepower

Hovair: see People Movers, Hovair

Hospitals: see Medical Centers

Households: see Surveys; see Demography

Housing: see also Relocation

Hovercraft: see Air Cushion Vehicle; see Hydrofoil

Hydraulics

Hydrocarbons: see Air Pollution

Hydrofoils: see also Air Cushion Vehicles

Illumination: see Lights and Lighting

Income: see Demography; see Ridership

Indexes and Indexing: see Bibliographies

Industrial and Labor Relations: see also Manpower and Personnel

Industrial Areas: see Urban Development, inclusive; see Land Use

Information Aids

Information Dissemination: see Public Relations; see Signs and Signals; see Advertising and Promotion

Information Retrieval: see Computer, inclusive

Inner City

Input-Output Devices: see Computer, inclusive; see Instrumentation

Input Signals: see Signs and Signals

Instrumentation

Insurance

Intercity Transportation: see also specific modes

Interfaces

Intergovernmental Relations: see Government, intergovernmental relations

Interior Vehicle Design: see Vehicle, design

Intermodal Competition

Internal Combustion Engines: see Propulsion Systems, internal combustion

Intersections and Crossings

Insulation

Intermittant-Entry Systems: see Access, planning and control

Interstate Highways: see Highway, types

Interurban Transportation: see Intercity Transportation

Interviewing: see Surveys

Jitney Bus: see Bus, jitney

Jobs: see Employment

Joint Development

Joint Fares: see Fares, cost determination

Joints and Joining

Junctions: see Intersections and Crossings

Jurisdiction: see Government, inclusive

Kerosene: see Fuel, types

Key Punches: see Computer, programming

Kiss and Ride

Kinetic Energy

Labor Unions: see Industrial and Labor Relations

Land Acquisition: see also Rights-of-Way

Land Appraisal: see Land Acquisition

Land Use: see also Urban Development, inclusive

Lane, reserved

Lane Separation

Lasars: see Boring and Boring Machines

Lateral Forces: see Vibrations

Law Enforcement: see Crime and Crime Prevention

Legislation: see Government, inclusive

Leasing: see Public Ownership

Liabilities: see Insurance

Library: see Bibliographies

Lights and Lighting

Line Supervision

Linear Induction Motors: see Propulsion Systems, linear induction

Linear Programming: see Computer, programming

Linkages: see also Couplings

Local Government: see Government, urban

Logarithms: see Quantitative Analysis

Logic Circuits: see Computer, inclusive

Logistics

Maintenance,
- costs
- equipment
- facilities
- personnel: see Manpower and Personnel

Management,
- operations and techniques: see also Budgets and Budget Planning
- planning and analysis: see also Budgets and Budget Planning
- training techniques

Manpower and Personnel: see also Recruitment

Maps and Mapping: see also Topography

Market Research: see also Demography

Marketing: see Market Research; see Advertising and Promotion

Matching Funds: see Financing Mass Transportation

Materials Handling

Mathematical Analysis: see Quantitative Analysis

Measuring and Measurements: see also Instrumentation

Mechanical Fasteners: see Fasteners and Fastenings

Media: see Advertising and Promotion

Medians: see Lane Separation

Medical Centers

Merging Traffic: see Traffic, flow

Meters and Metering

Metropolitan Areas: see Urban Development, inclusive

Metropolitan Government: see Government, urban

Metropolitan Planning: see Urban Development, planning

Mileage: see Fuel, consumption; see Speed and Speed Control

Minibus: see Bus, minibus

Minicar: see Private Transportation, automobiles

Minirail: see People Movers, specific types

Mixed-Mode Systems: see Dual Mode Systems

Mobile Overpass Roadway Repair Vehicle (MORV): see also Maintenance, equipment; see also Highway, maintenance

Modal Selection: see Modal Split

Modal Split

Model Cities and Model City Residents: see Urban Development, renewal

Monitoring: see Vehicle, monitoring

Monorail: see People Movers, monorail

MORV: see Mobile Overpass Roadway Repair Vehicle

Motors: see Propulsion Systems, inclusive

Moving Sidewalks: see Conveyors; see Sidewalks; see Pedestrians

Moving-Way Systems: see Conveyors

Mufflers

Multivariate Analysis: see Quantitative Analysis

Muncipal Ownership: see Public Ownership

New Communities: see New Towns

New Towns

Node-Oriented Transportation: see Specific Systems; see Distribution Systems

Noise and Noise Control

Nonlinear Programming Systems: see Computer, programming

Nonuser Benefits: see Social Benefits

Nuclear Energy: see Fuel, types

Occupations: see Employment

Off-Peak Traffic

Off-Street Parking: see Parking, facilities

Office Buildings: see Center City; see Trip Generation

Open Cuts: see Tunnels and Tunneling

Open Space: see Land Use

Operating Costs: see Financing Mass Transportation

Origin-Destination Studies: see Trip Generation; see Surveys

Outlying Areas: see Demography; see Urban Development, inclusive; see Suburbs

Overhead Costs: see Financing Mass Transportation

Overpasses

Owl Service: see Schedules and Scheduling

Parallel Routes: see Routes and Routing

Park-and-Ride: see Parking, Park-and-Ride

Parking,
- capacity and demand
- cost
- facilities
- Park-and-Ride
- planning
- regulations

Passengers: see Ridership; see specific types

Passenger Counters

Pavements: see Highway, surfaces

Peak-Hour Traffic: see Traffic, peak-hour

Peak-Loads: see Bus, commuter; see Rail, commuter; see Traffic, peak-hour

Pedestrians

People Movers,
- Aerial Transit System
- Alden StaRRcar
- cable car
- Carveyor
- Dashaveyor
- General Electric Aerial Transport
- gravity-vaccum tube transit: see Tubes and Tube Vehicles
- Hovair
- monorail
- Scherer Monobeam

People Movers, (cont'd)
    Synchroveyor
    Transit Expressway
    Transivator
    Varo-Monocab

Personal Rapid Transit

Personal Transport Vehicles: see Private Transportation, inclusive

Personnel: see Manpower and Personnel

Piggyback: see Freight Movement

Pipes and Pipelines

Plastics: see Construction, materials; see Rail, materials

Pneumatics

Point-to-Point Transit: see Trip Generation

Police: see Crime and Crime Prevention

Politics: see Government, inclusive

Pollution: see Air Pollution; see Noise and Noise Control; see Environment and Environmental Control

Polyethylene: see Rail, materials

Population: see Demography

Poverty: see also Inner City

Power Collection and Power Collectors: see Power Distribution; see Instrumentation

Power Conversion Devices: see Instrumentation

Power Distribution

Power Lines: see Power Distribution

Power Plants: see Power Distribution

Precast Concrete: see Highway, surfaces; see Construction, materials

Pressure and Measurement

Prestressed Concrete: see Highway, surfaces; see Construction, materials

Primary Highways: see Highway, types

Private Roads: see Highway, types

Private Transportation,
    automobiles
    bus
    cycles

Private Transportation (cont'd)
    car pools
    driver
    taxicabs

Probability Theory: see Quantitative Analysis

Programming: see Computer, programming

Promotions: see Advertising and Promotion

Propulsion Systems,
    diesel
    electric: see also Batteries and Cells
    external combustion
    fuel cell: see Batteries and Cells
    internal combustion
    Hybrid
    horsepower
    linear induction
    turbines

PRT Systems: see Personal Rapid Transit

Public Address Systems: see Communications

Public Administration: see Government, inclusive

Public Highways: see Highways, inclusive

Public Opinions: see Ridership; see Surveys; see Community Response

Public Ownership

Public Parking: see Parking, inclusive

Public Relations

Public Support: see Financing Mass Transportation; see Community Response

Qualitative Analysis

Quality Control

Quantitative Analysis

Questionnaires: see Surveys

Race

Radio: see Communications

Rail: see also People Movers, specific types,
automatic control
bus: see Dual-Mode Systems
car: see Rail, rolling stock
commuter
cost
laboratory cars: see Testing Facilities
materials
rolling stock
stations and terminals
systems planning and design
tracks: see Tracks and Trackage

Rapid Rail: see Rail,

Real Estate: see Land Use; see Land Acquisition; see Urban Development, inclusive

Receivers: see Communications

Recorders: see Measuring and Measurements; see Instrumentation

Recreational Facilities

Recruitment: see also Manpower and Personnel

Rectifiers: see Instrumentation; see Propulsion Systems, electric

Referendum: see Government, inclusive; see Financing Mass Transportation

Regenerative Braking: see Brakes and Braking, regenerative

Regional Planning: see Urban Development, planning

Regulations: see Government, inclusive

Reinforced Concrete: see Highway, surfaces; see Construction, materials

Relocation

Remote Control: see specific devices

Replacement Costs: see Maintenance, costs

Research Operations

Reserved Lanes: see Bus, priorities; Lane, reserved

Residential Areas: see Urban Development, inclusive; see Demography; see Center City; see Suburbs

Resistors: see Batteries and Cells; see Propulsion Systems, electric

Revenue: see Financing Mass Transportation; see Fares, cost determination

Reversible Traffic Lanes: see Traffic, flow; see Traffic, control

Ride Quality: see Vehicle, design; see Quality Control

Ridership: see also surveys; see also specific aspects of ridership

Right-of-Way

Roadbeds

Roads: see Highway, inclusive

Roadside Development: see Highway, planning

Robbery Prevention: see Crime and Crime Prevention

Rock Cutting: see Boring and Boring Machines

Rock Formation: see Structural Analysis; see Topography

Routes and Routing: see also Schedules and Scheduling; see also Computer, applications; see also Trip Generation

Rubber Tires: see Wheels

Run Cutting: see Schedules and Scheduling

Rural Areas: see also Small Cities

Rush-Hour Traffic: see Traffic, peak-hour

STOL (Short Takeoff and Landing): see Aircraft, STOL

Safety

Schedules and Scheduling: see also Routes and Routing; see also Computer, applications

Scherer Monobeam: see People Mover, Scherer Monobeam

School Buses: see Bus, school

Scrip: see Fares, collection

Seats and Seating

Secondary Roads: see Highway, types

Security: see Crime and Crime Prevention

Sensors: see also Vehicle, monitoring

Sex

Shelters: see specific modes

Shipping: see Freight Movement

Shoppers: see Fares, reduction; see Ridership; see Trip Generation

Shops and Garages: see Maintenance, facilities

Shuttle Buses: see Bus, feeder; see Bus, jitney

Sidewalks

Sidewalks, moving: see Sidewalks; see Conveyors; see Pedestrians

Signals: see Signs and Signals

Signs and Signals

Simulations: see Games and Game Theory; see Computer, applications

Single-Lane Traffic: see Lane Separation; see Traffic, flow

Site Surveys: see Site Selections

Site Selections

Skirts

Skokie-Swift

Skylounge: see Aircraft, VTOL

Sjy-kar Transivator System: see People Movers, Transivator

Slums: see Urban Development, renewal; see Housing; see Poverty; see Inner City

Small Car Systems: see Private Transportation, automobiles

Small Cities

Smog Control: see Air Pollution

Social Benefits

Social Planning: see Social Benefits

Socioeconomic Status: see Ridership; see Poverty

Software, computer: see Computer, programming

Solid State: see Instrumentation

Sound Absorption: see Noise and Noise Control; see Mufflers

Spacing: see Headways

Spectrum Utilization: see Communications

Speed and Speed Control

Springs: see Suspension

Stabilizers: see Suspension

Staggered Hours: see Traffic, flow

Stainless Steel: see Construction, materials; see Rail, materials

State Government: see Government, state

Stations: see specific modes

Statistics: see Surveys; see Quantitative Analysis

Steel: see Construction, materials; see Rail, materials

Steel Wheel: see Wheels

Stopping Distances: see Speed and Speed Control; see Brakes and Braking, inclusive

Storage Batteries: see Batteries and Cells

Stratification: see Topography; see Demography

Stress: see Structural Analysis

Strikes: see Industrial and Labor Relations

Structural Analysis

Students: see Youth; see Universities; see Bus, school; see Ridership

Subsidies: see Government, inclusive; see Financing Mass Transportation

Subsurface Structures: see Underground, inclusive

Suburbs,
- business districts
- suburb-city bus service: see Bus, commuter
- suburb-city feeder bus: see Bus, feeder
- suburb-city rail service: see Rail, commuter
- suburb-city rapid transit: see Rail, commuter
- suburb-city youth services: see Youth

Subways: see Rail, inclusive; see Underground, inclusive
- air conditioning: see Air Conditioning
- car construction and design: see Rail, rolling stock; see Rail, systems planning and design
- planning: see Rail, systems planning and design
- stations: see Rail, stations and terminals

Summer Youth Programs: see Youth

Surface Effect Vehicle: see Air Cushion Vehicle

Surveillance: see Crime and Crime Prevention; see Vehicle, monitoring; see Sensors

Suspension

Surveys

Switches and Switching

Synchroveyor: see People Movers, Synchroveyor

Systems Analysis: see specific systems; see Quantitative Analysis; see Qualitative Analysis

TACV (Tracked Air Cushion Vehicle): see Air Cushion Vehicles

Taxes and Taxation: see Government, taxation

Taxicabs: see Private Transportation, taxicabs

Taxonomy

Television: see Advertising and Promotion

Terminals: see specific modes

Testing Facilities

Thermal Insulation: see Insulation

Time Costs: see also Speed and Speed Control

Topography

Tolls

Torque: see Speed and Speed Control; see Brakes and Braking; see Wheels

Tracked Air Cushion Vehicle: see Air Cushion Vehicles

Tracks and Trackage: see also Rail, materials

Traction Motors: see Propulsion Systems, electric

Traffic,
- analysis
- congestion
- control
- flow
- forecasting: see Traffic, analysis
- peak-hour
- safety: see Safety
- signals: see Signs and Signals
- Volume: see Traffic, flow

Train Protection: see Safety; see Rail, systems planning and design

Training Programs: see Management, Training Techniques; Manpower and Personnel; see Bus, driver; see Private Transportation, driver

Trains: see Rail, inclusive

Transit Authority: see Government, inclusive; see Public Ownership; see Management, inclusive

Transivator: see People Movers, Transivator

Travel Patterns and Demand: see Trip Generation; see Ridership; see Modal Split

Tread: see Wheels; see Brakes and Braking, inclusive

Trenching: see Tunnels and Tunneling

Trip Distribution: see Trip Generation

Trip Generation

Trip Length: see Ridership; see Time Costs; see Trip Generation

Trucks and Truck Lines: see also Freight Movement; see also Rail, rolling stock

Tubes and Tube Vehicles

Tunnels and Tunneling

Turbines: see Propulsion Systems, turbines

Two-Lane Highways: see Highway, types; see Lane Separation

Two-Way Communication: see Communications

Underground,
- parking: see Parking, facilities
- railroads: see Rail, inclusive
- shelters
- storage
- structures

Unemployment: see Employment

Urbmobile: see Bi-Modal Systems, see Dual Mode Systems, see PRT

Universities

Urban Development,
- planning
- renewal

User Benefits: see specific types

User Charges: see Fares, inclusive

V/STOL (Vertical/Short Takeoff and Landing): see Aircraft, VTOL; see Aircraft, STOL

VTOL (Vertical Takeoff and Landing): see Aircraft, VTOL

Vandalism: see Crime and Crime Prevention

Vehicle,
- design: see also specific modes
- guidance: see Guides and Guidance
- monitoring

Vehicular Communication: see Communications

Ventilation: see Air Conditioning; see Heating

Viaduct: see Overpasses

Vibrations

Visual Aids: see Signs and Signals; see Advertising and Promotion; see Information Aids

Waiting Time: see Headways; see Time Costs; see Schedules and Scheduling

Walkways: see Sidewalks

Warning Systems: see Signs and Signals; see Crime and Crime Prevention; see Vehicle, monitoring; see Safety

Weather Effects

Welfare: see Poverty

Westinghouse Transit Expressway: see People Movers, Transit Expressway

Wheels

Work Stoppages: see Industrial and Labor Relations

Work Trips: see Trip Generation; see Employment

Youth

Zoning: see Land Use

Cynthia Williams	$4,002.08
David Lee	$1,519.42
Cheryl Powell	$2,549.15
Lynette Rose	$1,400.67
Juan Laster	$336.00
Mary Ann McCarthy	$729.60
James Kain	$3,226.47

26188.27
1832.18
28020 45

13763.39
+91% + 7%

28020.45
+13400
41420 45

J. Good - could you give me a grand total

P.

13763.39
.91
13763.39
12387251
12524.8849

13763.39
12524.88
26188.27
.02
1832.1789

(a)

to: NSA

February 23, 1972

Abstracting of UMTA Reports

Assistant Administrator for Administration

Assistant Administrator for Research, Development & Demonstration

As we recently discussed, in the middle of next month the contractor who has been abstracting and indexing our reports will complete his task. As we agreed, it is now necessary that we establish a procedure to assure that future reports are brought into the system. It is suggested that perhaps one of your staff (Alex Abraham or Dennis Symes) could review the various alternatives for maintaining the system in the future.

Frankly, I believe that each grantee or contractor with his final report should include the necessary information to be placed into the system. Since this may take some time in accomplishing, it is felt that during the transient period, we could hire a temporary employee to carry out this function on a one- or two-day per week basis. What are your ideas ?

W. H. Boswell

WHBoswell:djm UAD-1 2/23/72
cc: Chron File; ~~Pat Cass~~

February 23, 1972

Abstracting of UMTA Reports

Assistant Administrator for Administration

Assistant Administrator for Research, Development & Demonstration

As we recently discussed, in the middle of next month the contractor who has been abstracting and indexing our reports will complete his task. As we agreed, it is now necessary that we establish a procedure to assure that future reports are brought into the system. It is suggested that perhaps one of your staff (Alex Abraham or Dennis Symes) could review the various alternatives for maintaining the system in the future.

Frankly, I believe that each grantee or contractor with his final report should include the necessary information to be placed into the system. Since this may take some time in accomplishing, it is felt that during the transient period, we could hire a temporary employee to carry out this function on a one- or two-day per week basis. What are your ideas?

W. H. Boswell

WHBoswell:ljm UAD-1 2/23/72
cc: Chron File; Pat Cass

February 22, 1972

Abstracting Effort - Memo of 2/17

Pat Cass

W. S. Allison

1) I believe an individual must be assigned at least half time in order to maintain the abstracting system--at least in the short term. Possibly in the future this amount of time will not be necessary. I had been told--many months ago--that it was to be made a requirement of a grant and contract that our grantee or contractor would provide an abstract of each report submitted. This has not yet been done but when and if it is, it will greatly simplify the abstracting effort.

Bill Boswell has talked with Robert Hemmes about taking over this effort and possibly retaining David Lee as a part-time temporary employee to fill in the gap for the time being.

2) We can brief the executive staff at any time, but I believe, it would be premature to do so before we know how it's going to be maintained and how exactly it's going to operate. Certainly we cannot send a memo to "All Hands" before these things are decided.

3) The work will never be complete--not as long, that is, as UMTA receives reports. Besides abstracting reports received since Feb. 4, there are a number of other tasks which could be done, and I believe should be done -

a) I would like to see a users manual.
b) I would like to see definitions added to the key words.
c) Do we want to accumulate and abstract non-UMTA, but related to UMTA, funded research?
d) Should all UMTA reports be housed in the National Technical Information Service.

February 22, 1972

Abstracting Effort - Memo of 2/17

Pat Case

W.S. Allison

1) I believe an individual must be assigned at least half time in order to maintain the abstracting system--at least in the short term. Possibly in the future this amount of time will not be necessary. I has been told--many months ago--that it was to be made a requirement of a grant and contract that our grantee or contractor would provide an abstract of each report submitted. This has not yet been done but when and if it is, it will greatly simplify the abstracting effort.

Bill Bossell has talked with Robert Hammond about taking over this effort and possibly retaining David Lee as a part-time temporary employee to fill in the gap for the time being.

2) We can brief the executive staff at any time, but I believe, it would be premature to do so before we know how it's going to be maintained and how exactly it's going to operate. Certainly we cannot send a memo to "All Hands" before these things are decided.

3) The work will never be complete--not as long, that is, as UMTA receives reports. Besides abstracting reports received since Feb. 4, there are a number of other tasks which could be done, and I believe should be done -

a) I would like to see a users manual.
b) I would like to see definitions added to the key words.
c) Do we want to accumulate and abstract non-UMTA, but related to UMTA, funded research?
d) Should all UMTA reports be housed in the National Technical Information Service.

4) Additional questions should be raised. Should we work with a manual system, should we put it into our own MICS or should we have the whole thing maintained outside UMTA by perhaps the Highway Research Board?

I don't know how much it would cost to go manual but as it's only a matter of xeroxing copies of the abstracts times the number of key words on each, it shouldn't be too expensive.

Basic set up costs for the MICS would be $7,000. This includes $2,000 to key punch, $2500 to code and a $2000 slush fund for contingencies--which there always are. Retrieval would be approximately 34¢ per abstract which would include a print out. We believe it would take approximately 50 days to get it into the computer.

Both of these options would, of course, require ongoing maintenance and control capability.

What it would cost for HRB to maintain and control the system, I have no idea. If what we are receiving for the $100,000 we already have in HRB is any criteria, I would believe the costs would be astronomical; but maybe not.

Pat Cass

4) Additional questions should be raised. Should we work with a manual system, should we put it into our own MICS or should we have the whole thing maintained outside HMTA by perhaps the Highway Research Board?

I don't know how much it would cost to go manual but as it's only a matter of scrutiny copies of the abstracts times the number of key words on each, it shouldn't be too expensive.

Basic cost up costs for the MICS would be $7,000. This includes $2,000 to key punch, $2500 to code and a $2000 stand fund for contingencies--which there always are. Retrieval would be approximately 3½¢ per abstract which would include a print out. We believe it would take approximately 50 days to get it into the computer.

Both of these options would, of course, require ongoing maintenance and control capability.

What it would cost for HRB to maintain and control the system, I have no idea. If what we are receiving for the $100,000 we already have in HRB is any criteria, I would believe the costs would be astronomical: but maybe not.

Pat Cass

UNITED STATES GOVERNMENT

Memorandum

DEPARTMENT OF TRANSPORTATION
URBAN MASS TRANSPORTATION ADMINISTRATION

DATE: 2/17

In reply refer to:

SUBJECT: Abstracting Effort

FROM : Patricia Cass PC

TO : William Allison

This project now being undertaken by Transendental Corp., will be closed out on 15 March. At that time we will have completed the following:

1) abstracting of all UMTA reports on hand on 2/4/72,

2) abstracting of 1/2 UMTA reports still to be received from NTIS (about 15)

3) final update of UMTA ~~Thesaurus,~~ KEY SUBJECT WORDS

4) Completion of indexing; i.e., index numbers put on reports,

5) NTIS catalog numbers added to index cards.

As of this time we will have spent over $41,000,00~~0~~ on the project.

There are a number of tasks which could be worked on after this date but I don't think it necessary to address them now.

The main problems facing us at this time are:

1) Final set up of manual retrieval system

2) Maintenance of system on a continuing basis -
   a) continue abstracting
   b) retrieve reports when requested
   c) continue up-date of index
   d) maintain check out of reports

We have run out of money in the pot set aside from RD&D for this effort. Boswell is discussing with Hemmes how this project should be continued as it is an RD&D function.

Pat Cass

cc: B. Boswell

TASKS :	MONTH OF JANUARY, 1972	MONTH OF FEBRUARY, 1972	MONTH OF MARCH, 1972	April 1, 1972 —
ABSTRACTING				
- of reports on hand, 2/4/72				
- of reports acquired between 2/4 and 3/31/72				
- of continuing acquisitions				
REVIEW AND UPDATE OF KEY WORD LIST				
- based on responses to "UMTA Thesaurus"				
- continuing				
- prep. of new edition				
NOTE PB ORDER NOS. ON BLUE CARDS				
INDEXING				
- of reports on hand, 2/4/72				
- of new acquisitions				
- correction of errors on cards or abstracts				
FINAL REVIEW OF CARDS & ABSTRACTS				
PROPOSED FUTURE TASKS: - publication of materials - definition of Key Words - analysis of materials - prep. of user's handbook - final set-up of library				

DEPARTMENT OF TRANSPORTATION

ROUTE SLIP

	NAME	ORG/RTG SYMBOL	DATE
TO:			
	~~A.B. HALLMAN~~		
	PAT CASS		

- [ ] PER YOUR REQUEST
- [ ] FOR YOUR INFORMATION
- [ ] PER OUR CONVERSATION
- [ ] NOTE AND RETURN
- [ ] DISCUSS WITH ME
- [ ] FOR YOUR APPROVAL
- [ ] FOR YOUR SIGNATURE
- [ ] COMMENT
- [ ] TAKE APPROPRIATE ACTION
- [ ] PLEASE ANSWER
- [ ] PREPARE REPLY FOR SIGNATURE OF _____

REMARKS:

Attached are copies of Transcentental's proposed task chart and related costs, by month, for our work between January 1 and March 31, 1972.

Funds committed to Pat Cass — $13,400.00 THRU 15 March

cc. Pat Cass

FROM:	TELEPHONE NO.	ORG/RTG SYMBOL
David Lee	69624	

FORM DOT F 1320.9 (5-67) FORMERLY FORM OST F 1320.1 GPO 904-204

— [illegible] —	[illegible]	[illegible]	[illegible]	[illegible] : [illegible]

91%
+ 7%

PAY PERIODS:	LABOR COSTS:	LABOR + OVERHEAD, GA
1 January - 31 January, 1972	$ 2,800.00	$ 5,350.00
1 February - 28 February, 1972	2,800.00	5,350.00
1 March - 31 March, 1972	2,800.00	5,350.00
TOTAL:		16,050.00

TRANSCENDENTAL CORPORATION
1629 K Street N.W., Suite 520
Washington, D.C. 20006
(202) 296-7984

Miss Patricia Cass,
Special Assistant to the Deputy Administrator
Urban Mass Transportation Administration
Room 9322
400 Seventh Street, SW
Washington, D.C. 20590

December 22, 1971

Re. Contract No. DOT-UT-10013; Code UAD-40; SBA 0578-8(2)71; Abstracting, Indexing, Cataloguing and Inventorying UMTA's Technical Reports

Dear Miss Cass,

I wish to inform you that the work on this contract has progressed smoothly and the quality of the abstracts has continued to be high. However, it seems that the original time projections must be reviewed and increased. There are a number of unforseen variables that have occurred and directly affected the abstracting schedules. Nevertheless, as in any original work of this type some problems do occur and through the solving of these problems the final product should be a better one. The problems and their details are explained in the attached memorandum.

After reviewing the average abstracting rates of the personnel and noting the types of reports that remain to be abstracted, the contract should be extended approximately 90 to 105 days. The payroll for this project averages approximately $2,800 plus $2,548 for overhead, general administration and profit for a total of $5,358/mo. Therefore, the additional money needed should be about $16,644.

IN STOCK AT THIS TIME

Sincerely,

M. Duke Greene, Jr.
President

11,300
27944

1/3

WSC says OK if we can find $. talk to AB about

JC

UNITED STATES GOVERNMENT

Memorandum

DEPARTMENT OF TRANSPORTATION
URBAN MASS TRANSPORTATION ADMINISTRATION

DATE: December 21, 1971

In reply refer to:

SUBJECT: Extension of Contract

FROM : M. O. Greene

TO : Pat Cass

In evaluating this request for an extension of our present contract, we feel several relevant factors should be noted. The initial projections were made based on abstracting the final reports on-hand only and the following additional factors such as reading speed, catalogueing time, inventorying time and indexing etc. were considered. However, since that time we have had to expand the abstracting to encompass pertinent project progress reports and interim reports. Additionally, we have had tremendous increase in the number of reports which is explained later. Therefore, the original projections were not extensive enough and at this time they should be revised. There was at that time no available information or past experience for developing a systematic retrieval system of this kind. Similar library systems were reviewed thoroughly, but not found applicable within the specifications outlined for an UMTA reports library. It was therefore necessary to create an essentially unique system which required special procedures and instruments. It is our opinion that initial estimates of the time required to develop this novel framework were owing to a variety of unforseen factors.

In particular, the Key Word List as originally prepared was found unsuitable and its revision proved to be more complex and challenging than could have been estimated. The original edition was created simply by combining indexes from the UMTA R&D Directory, HRB Index + Urban Transportation Bibliography ~~from three UMTA publications.~~ The final edition, however, was developed by the entire staff working as a team and each word was reviewed throughly. This effort took approximately three work weeks and considerably affected the original projections. The result was an instrument that from all indications is both comprehensive and functional -- the first truly mass transportation-oriented index of key words. The time consumed for this project was obviously greater than anticipated, but we feel the durability of the product justifies the more extensive effort.

A second factor concerns the abstracting of reports. An initial estimate that abstractors could produce five such summaries per day was based largely on the output during our very first few weeks. It is now apparent that while the substance of some reports is easily abstracted, many lack tables of contents or introductory material. The abstracting process therefore becomes far more difficult and time consuming if we are to maintain high standards of excellence in the work. The time required for abstracting highly technical reports which embrace broad topical material and often run to more than 300 pages is three to four times that required on the average. In our opinion, a realistic expectation for abstracting would have been more nearly three abstracts daily per person.

A third factor is that we have received a large number of new reports which were not in the initial inventory. More than 100 such reports have been received within the last two months alone, including both newly generated reports and older ones which had to be ordered through the National Technical Information Service. This number represents a more than 10% increase in total abstracts to be written and is expected to increase continually throughout the contract period.

Possible Additional Work -

1) Add ACH #'s
2) Add definitions to key words
3) update and maintenance
4) dissemenate

ACCOMPLISHMENTS

1) Basic index system established

2) All reports have been indexed & that system

3) Abstracting procedures established
10-15 key words
300 words per abstract
Title
Author - contractor
Project #

4) 6 cabinets of reports filed and catalogued

retype key word index

key word

SCHEDULE OF WORK TO BE COMPLETED:

1. Finish organizing material on hand by functional area classification
   - includes material in eighth cabinet

2. Check tentative classifications

3. Shelve remaining material

4. Remove all duplicates

5. Finalize Blue Card Index (ie. by project number)
   - includes final decision on card format
   - includes check of blue cards filed against documents shelved

6. Begin check of missing material
   - requires completion of item #5

7. Finalize shelving system; place dividers, binders, etc.

8. Assign Index Numbers; put material and corresponding blue cards in order

9. Begin final alphabetical title and author indexes
   - requires final decision on card format

10. Abstracting (to continue throughout)

11. Tentative writing of key words index (should occur after approx. 150 abstracts are completed)

12. Format of key word index must be determined

UNITED STATES GOVERNMENT

Memorandum

DEPARTMENT OF TRANSPORTATION
URBAN MASS TRANSPORTATION ADMINISTRATION

DATE: November 22, 1971

In reply refer to:

SUBJECT: Progress Report to Date

FROM : Cynthia Wilkins

TO : Pat Cass

The following work has been completed:

1. Approximately 425 abstracts have been written and typed in final form. An additional 25 abstracts are in the hands of the typist.

2. Forty missing reports ordered from the Clearinghouse were received and thirty new reports were channelled to us from the Office of Administration, making a total of 70 reports which have been checked-in, master carded, and filed.

3. A revised list of reports known to be missing has been prepared. The list contains 38 reports of which 32 are available from the Clearinghouse.

4. All three master card indexes are complete and up to date.

5. THE UMT THESAURUS WAS DISTRIBUTED TO ALL MEMBERS OF STAFF THROUGH THE EXECUTIVE STAFF. WE HAVE HAD 8 COMMENTS ON THIS - WAS DISTRIBUTED WEEK OF NOVEMBER 8.

PROGRESS REPORT: 29 September to 6 October 1971

TO: Pat Cass

FROM: Cynthia Wilkins

The typing of the master card indices is now eighty-five percent complete.

Approximately 160 abstracts have been written to date.

The key word list has been revised and by Friday, Oct. 15, the dynamic list of directives will be complete.

Progress Report: 23 September to 29 September, 1971

TO: Pat Cass

From: Cynthia Wilkins

To date approximately 155 abstracts have been written.

The key word list has undergone a thorough examination, and revision is nearly complete.

The master card indexes are now two-thirds complete.

UNITED STATES GOVERNMENT

Memorandum

DEPARTMENT OF TRANSPORTATION
URBAN MASS TRANSPORTATION ADMINISTRATION

DATE: September 15, 1971

In reply refer to:

SUBJECT: Progress Report: September 8 to 15, 1971

FROM : David Lee

TO : Pat Cass

The following work was completed during the past week:

1. Approximately 32 abstracts were written.

2. Cheryl Powell was brought on board as a typist/abstractor, beginning on September 13. She was given a brief orientation to the project, and has begun work.

3. Typing of final-form for the remaining half of the master card indexes was begun.

4. Andy Duckworth continued his work on the Key Word Index following last week's discussion. Copies of several subject heading circulars were received from the Northwestern University Transportation Center Library which may be useful in this effort.

5. David Lee returned to the project on September 13 as a part-time employee of Transcendental Corporation.

9/2/71

Progress on UMTA Retrieval

[illegible]

Storage Capacity - [illegible]

[illegible]

My Wish List - [illegible]

Continuing [illegible] of missing documents

Review of [illegible] - some [illegible]
[illegible]

1500 documents to be [illegible]

[illegible]
being [illegible]

$ Amount of [illegible] $ [illegible]

Publication [illegible]
[illegible]
[illegible]
[illegible]

25,000 (allocated)

TRANSCENDENTAL CORPORATION
1629 K Street N.W., Suite 520
Washington, D.C. 20006
(202) 296-7984

August 30, 1971

Miss Patricia Cass
Special Assistant to the
Deputy Administrator
400 7th Street S. W.
Washington, D. C. 20591

Dear Miss Cass:

This letter supersedes our letter of August 23, 1971. It is now our feeling that reports in UMTA's Technical Library can be abstracted and keyworded at an average rate of one every one and one-half hours.

If our assumption is correct that approximately 1500 documents will be abstracted, then the total effort involved approximates 2250 man hours (slightly over one man year).

As you know, we are not now funded for an effort of that magnitude. If so funded, we could proceed with the work on one of the schedules outlined below:

September - November '71	4 people
September - December '71	3 people
September - February '72	2 people

Budget:

Professional abstracter average hourly wage	$4.56
Audited and approved Overhead Rate at 91%	4.14
	$8.70

Budget: continued

Estimated Cost:

2250 man hours x $8.70 =	$19,575.00
Secretarial Services	
360 man hours x $5.73 =	2,063.00
($3.00 hourly + $2.73 overhead)	
	$21,638.00

Sincerely,

M. O. Greene, Jr.
President

MG:cw

UNITED STATES GOVERNMENT

Memorandum

DEPARTMENT OF TRANSPORTATION
URBAN MASS TRANSPORTATION ADMINISTRATION

DATE: August 25, 1971

In reply refer to:

SUBJECT: Two-Week Progress Report (August 11 - 25)

FROM : David Lee

TO : Pat Cass

During the past two weeks the following work was completed:

1. Typing of the master-card indexes continued; by Friday of this week we expect to have completed final-form for 1/2 the total number.

2. Thirty-five abstracts were written.

3. James Kain was brought on board and given an orientation to the project.

4. A Task Chart outlining projected progress was discussed and prepared.

5. Approximately 60 missing documents were identified; memoranda to relevant UMTA offices were prepared requesting information about missing documents and projects for which no documents were on hand.

6. All duplicate copies of documents on hand were boxed and set aside.

7. Approximately 20 new documents were received, catalogued, and shelved.

8. The Key Word Index was updated and retyped.

9. Work was begun on a chart to account for abstracts prepared and the time consumed in the preparation of each.

TRANSCENDENTAL CORPORATION

1629 K. Street N. W., Suite 520
Washington, D. C. 20006

(202) 296-7984

August 23, 1971

Miss Patricia Cass
Special Assistant to Deputy
Administrator
400 7th Street S. W.
Washington, D. C. 20591

Dear Miss Cass:

Based on our experience to date, it is now our feeling that the reports in UMTA's Technical Library can be abstracted and keyworded at an average rate of one every one and onehalf hours.

If our assumption is correct that approximately 4000 documents remain to be abstracted, then the total effort involved approximates 6000 man hours (slightly less than 3 man years).

As you know we are not now funded for an effort of that magnitude. If so funded, we could proceed with the work on one of the schedules outlined below:

September - November '71	12 people
September - December '71	9 people
September - February '72	6 people

Budget:

Professional abstracter average hourly wage	$4.56
Audited and approved Overhead Rate at 91%	4.14
Average hourly total	$8.70

TRANSCENDENTAL CORPORATION

1629 K. Street N. W., Suite 520
Washington, D. C. 20006

(202) 296-7984

August 23, 1971

Miss Patricia Cass
Special Assistant to Deputy
Administrator
400 7th Street S. W.
Washington, D. C. 20591

Dear Miss Cass:

Based on our experience to date, it is now our feeling that the reports in UMTA's Technical Library can be abstracted and keyworded at an average rate of one every one and onehalf hours.

If our assumption is correct that approximately 4000 documents remain to be abstracted, then the total effort involved approximates 6000 man hours (slightly less than 3 man years).

As you know we are not now funded for an effort of that magnitude. If so funded, we could proceed with the work on one of the schedules outlined below:

September - November '71	12 people
September - December '71	9 people
September - February '72	6 people

Budget:

Professional abstracter average hourly wage	$4.56
Audited and approved Overhead Rate at 91%	4.14
Average hourly total	$8.70

Budget: continued

Estimated Cost	
6000 man hours x $8.70 =	$52,200.00
Secretarial Services	
1000 man hours x $5.73 =	5,730.00
($3.00 hourly + $2.73 overhead)	$57,930.00
Present Approved Contract Cost	- 14,768.00
Additional Funds needed	$43,162.00

Sincerely,

M. O. Greene, Jr.
PRESIDENT

MG:c

1st O

UNITED STATES GOVERNMENT

Memorandum

DEPARTMENT OF TRANSPORTATION
URBAN MASS TRANSPORTATION ADMINISTRATION

AN

DATE: August 23, 1971

In reply refer to: UPA-1

SUBJECT: R&D and University Studies Project Reports

FROM: Assistant Administrator for Public Affairs

TO: Assistant Administrator for Research

As you may know, we are currently setting up a comprehensive index of all reports generated by UMTA grants. Once this is completed, we expect to have all reports indexed and shelved in a library fashion, with detailed abstracts for each document filed by key words in a special cross-reference index.

At this time, our inventory of reports on hand is missing several titles, and there are a number of research projects and university studies for which we have no reports at all. Attached is a list of reports we have identified as missing from our inventory and a listing of projects for which we are missing all or most reports.

Any assistance you can provide in locating these documents will be greatly appreciated. Please contact David Lee in room 9307B (telephone extension 60081) with any pertinent information.

C. Carroll Carter

C. Carroll Carter

UNITED STATES GOVERNMENT

Memorandum

DEPARTMENT OF TRANSPORTATION
URBAN MASS TRANSPORTATION ADMINISTRATION

DATE: August 23, 1971

In reply refer to: UPA-1

SUBJECT: R&D and University Studies Project Reports

FROM: Assistant Administrator for Public Affairs

TO: Assistant Administrator for Research

As you may know, we are currently setting up a comprehensive index of all reports generated by UMTA grants. Once this is completed, we expect to have all reports indexed and shelved in a library fashion, with detailed abstracts for each document filed by key words in a special cross-reference index.

At this time, our inventory of reports on hand is missing several titles, and there are a number of research projects and university studies for which we have no reports at all. Attached is a list of reports we have identified as missing from our inventory and a listing of projects for which we are missing all or most reports.

Any assistance you can provide in locating these documents will be greatly appreciated. Please contact David Lee in room 9307B (telephone extension 60081) with any pertinent information.

C. Carroll Carter

C. Carroll Carter

AN

R&D Projects for Which Some or All Documents are Missing *

TRD-3	Alan M. Voorhees
TRD-6	American Society of Civil Engineers
TRD-16	RAND Corp.
TRD-43	Johns Hopkins Univ., Applied Physics Lab
TRD-59	Sperry Rand Corp., Sperry Systems Devt.
TRD-65	R.L. Banks & Associates
TRD-66	Planning Research Corp.
TRD-73	Johns Hopkins Univ., Applied Physics Lab
TRD-74	Bureau of the Census
TRD-85	Tube Transit Corp.
TRD-86	Nat'l. Academy of Engineers; Telecommunications Committee
TRD-89	HUD/HEW
TRD-91	Urban Info. Systems Interagency Committee
TRD-92	Charles River Associates
TRD-94	Urban Corridor Demo. Program
TRD-95	Teledyne/Cubic/RCA
TRD-97	Northwestern University

* It is anticipated that in some cases, no reports have been generated yet by a particular project.

AN N

R&D Documents Known to be Missing

PROJECT #	TITLE
TRD-3	"Urban Mass Transit Planning Project: Factors Influencing Transit Planning" by Alan M. Voorhees & Associates [PB-180-484]
	"Urban Mass Transit Planning Project: Computer Program Specifications" [PB-180-485]
	"Urban Mass Transit Planning Project: Volume I, IBM 7090/94 Computer Programs General Information Manual" [PB-180-486]
	"Urban Mass Transit Planning Project: Volume II, IBM 7090/94 Computer Programs Users' Reference Manual" [PB-180-487]
	"Urban Mass Transit Planning Project -- Modal Split Simulation Model" [PB-180-488]
	"Urban Mass Transit Planning Project: Recommendations for Urban Mass Transportation Research" [PB-180-489]
TRD-6	"Sources of Information on Urban Transportation: Sources and Dissemination, Report #1" by American Society of Engineers, Urban Transportation Research Council" [no PB number]
	"Sources of Information on Urban Transportation: Comparative Economics of Urban Transit Operations, Report #5" [no PB number]
TRD-43	"Alden Capsule Transit System Control Subsystem" by Johns Hopkins University Applied Physics Lab [PB-192-737]
	"Transportation Technology Distribution System for a High Density Urban Area" [PB-192-739]

R&D Documents Known to be Missing (cont.)

PROJECT #	TITLE
TRD-43 (cont.)	"Human Sensitivity to Whole-Body Vibration in Urban Transportation Systems: a Literature Review" [PB-192-257]
	"Technical Evaluation of Advanced Urban Transportation Systems: Summary Report" [PB-192-731]
	"Collection and Distribution Systems: Technical Reviews of Six Baseline Definitions" [PB-192-759]
TRD-59	"Advanced Control Technology in Urban Traffic Control Systems -- Volume I: System Description" [PB-188-963]
	"Advanced Control Technology in Urban Traffic Control Systems -- Volume IA: Bus Priority Systems Description" [PB-190-847]
	"Advanced Control Technology in Urban Traffic Control Systems -- Volume II: UTCS/DPS Programming Specifications" [PB-190-848]
	"Advanced Control Technology in Urban Traffic Control Systems -- Volume III: UTCS/BPS System Equipment" [PB-190-849]
TRD-85	"Study of Technical and Cost Questions Related to the Feasibility of the Gravity-Vacuum Transit System" by Tube Transit Corporation; July 28, 1970 [PB-196-844]

UNIVERSITY STUDIES MISSING ALL DOCUMENTS *

URT-6	Univ. of California - Berkeley
URT-13	Brooklyn Polytechnic
URT-18	Missouri
URT-22	Northeastern
URT-23	Newark College of Engineering
URT-24	University of Illinois - Chicago
URT-29	Brooklyn Polytechnic
URT-32	Iowa
URT-37	Consortium, D.C.
URT-38	University of South Carolina
URT-43	Atlanta
URT-44	Milwaukee
URT-45	North Carolina A&T
URT-47	Southern University
URT-50	Pittsburgh
URT-52	Florida State

* It is anticipated that in some cases, no reports have been generated yet by a particular project.

UNIVERSITY STUDIES REPORTS REPORTS TO BE MISSING

PROJECT #	TITLE
URT-11	"Specialized Trip Generation Study of Metropolitan Recreation: A Case Study of Auto Accessibility to Recreational Facilities in the Washington, D.C. Metropolitan Area" By: Theodore F. Erlich; Spring, 1970 [PB-194-036]
	"Methodological and Parametric Foundations for Urban Transport Technology Evaluation: a Method Approach to Comparing Different Transport Systems" By: Phillip Graham ; Spring, 1970 [PB-194-097]
	"Commuter Railroad Service in the National Capital Region" By: Arthur J. Smith; Spring, 1970 [PB-194-104]
	"The New Town and Transportation Planning -- General Overview with a Case Study of Columbia, Maryland" By: Cameron Wiegand; Spring, 1970 [PB-194-203]
	"Research Project Summaries" By: Urban Transportation Fellows, Consortium of Universities, Washington, D.C.; Spring, 1970 [PB-194-107]
URT-49	"Interactive Editing of Transportation Networks, a Conceptual Approach to Interactive Network Editing" By: Matthias H. Rapp (University of Washington); December, 1970 [PB-199-381]

UNITED STATES GOVERNMEI

Memorandum

DEP/ MENT OF TRANSPORTATION
URBAN MASS TRANSPORTATION ADMINISTRATION

DATE:

In reply refer to:

SUBJECT: Progress Report: August 4-10

FROM : David Lee

TO : Pat Cass

1. A complete set of Blue Cards was completed; information on the cards originally typed by Mary Anne was insufficient.

2. Duplicate copies of all documents were removed from the cabinet shelves and stacked.

3. Three new stacks of documents from the Administration Office were indexed and shelved.

4. The new typist began work on August 9; she was given a brief orientation to the project and has already typed final-form for approximately 25% of the blue cards.

5. Identification of several unknown documents was completed.

6. Formats for further card indexing were agreed upon.

We have fallen slightly behind our progress estimates made last week for two reasons: (1) In the absence of Mr. Carter, David Lee has had to spend approximately two hours daily in work for the Public Affairs Office; (2) The arrival of three new stacks of unsorted documents has delayed our completion of the blue card index.

A decision should be made as soon as possible on the relocation of duplicate copies of documents. They are currently stacked randomly on the floor. This is not in itself a particular problem, but we have had several people (both UMTA and non-UMTA personnel) coming in to ask for duplicate copies and often asking if they may "just look through" the stacks. A possible solution might be to shelve duplicates in the three cabinets outside our office.

Progress Report: Wednesday, 28 July - Tuesday, 3 August, 1971

To: Pat Cass

From: Cynthia Wilkins

(1) Eight abstracts have been written in rough draft form

(2) Finished cataloguing reports in cabinets A, B, C, & D by project number. Upon contacting knowledgeable personnel, cabinet "C" has been sorted and arranged by project number (this cabinet contained unidentifiable reports); removed duplicate copies of reports in cabinets "B" and "C".

(3) summarized and edited a 42-page keyword index, condensing it to 22 pages using the abstracts on hand with keywords.

(4) began finalizing blue card index by title in preparation for typist

NOTE: Typist is to begin work Monday, 9 August.

Progress Report: Thursday, 22 July - Tuesday, 27 July 1971

To: Pat Cass

From: Cynthia Wilkins

Mary Anne McCarthy

(1) Compiled booklet of handy hints for abstracting.

(2) worked with Cynthia Wilkins on Orientation and abstract writing.

(3) organized card file index

~~(4) took inventory of supplies and purchased same~~

David Lee

(1) organized file cabinets of reports (A, B, C, D).

(2) started the organization of cabinets F, G, & H.

(3) worked on the card file index

(4) started a card file check with reports in cabinets A, B, C, & D.

Cynthia Wilkins

(1) reviewed several reports

(2) wrote 6 abstracts in semi-final form

(3) worked with David Lee on card index

~~(4) took inventory of and purchased supplies.~~

Note: Additional information is needed in order to proceed with the organization of file cabinet C. This information will be sought from HUD and knowledgeable personnel.

Mary Anne McCarthy terminated her position, Friday, 23 July 1971.

Progress Report: Monday, 12 July - Wednesday, 21 July, 1971
To: Pat Cass
From: Mary Anne McCarthy

Mary Anne McCarthy:	(1) wrote abstracts - 20 are in final form
	(2) began inventory of the three new file cabinets of reports.
	(3) wrote job description and writer's booklet.
	(4) worked with Cynthia Wilkins on orientation and abstract writing.
David Lee: [began Thursday, July 15]	(1) developed index system
	(2) wrote 17 abstracts [they are in rough draft form]
	(3) edited keyword index
	(4) worked on inventory of new reports
Cynthia Wilkins [began Monday, 19 July]	(1) orientation
	(2) wrote 3 abstracts

Note: Cynthia and/or David will prepare the progress reports to be handed in each Wednesday.

Progress Report: 28 June to 9 July, 1971

To; Pat Cass

From: Mary Anne McCarthy

28 June to 2 July:

(1) ordered reports in one file cabinet.
technical studies by city
university reports by university
research reports and demonstrations by title

(2) catalogued all reports on 3 x 5 index cards
once by project number, and once by title

(3) completed inventory of reports
three lists compiled for each report category: (1) reports listed on inventory sheet but not on hand; (2) reports not listed on " " but are on hand; (3) reports both listed and on hand.

6 July to 9 July:

(1) summarized three available indices into one, 42-page index.

(2) wrote abstracts for 8 reports.

Plan for 12 July to 16 July:

(1) condense summary index into workable document, relying on the 8-abstract sample and accompanying keywords.

(2) continue writing abstracts, at projected rate, for this week, of 3 or 4 abstracts per day. This rate will probably increase to 5 abstracts per day.

TRANSCENDENTAL CORPORATION
1629 K Street N.W., Suite 520
Washington, D.C. 20006
(202) 296-7984

June 29, 1971

U.S. Department of Transportation
Urban Mass Transit Administration
400 7th Street S.W.
Washington, D.C.

Attn: Miss Patricia Cass

Dear Pat,

Confirming our conversation today, I would like to summarize the points we discussed.

I believe that we tenatively agreed that, after Mary Anne finishes the indexing and cataloging in which she is now engaged, she will condense and organize the several different keyword lists currently available to us. Following that, she will abstract and keyword a random sample of the technical reports in each of your funding classification categories - - this to establish the workability of the consolidated keyword list. Having satisfactorily completed these tasks, we will then press on with the work, the abstracting, keywording and indexing for retrieval of UMTA's library of technical reports. I understand that our product from this phase should be both usable manually and easily convertible to automated processing.

I suggest that, for each document in your library, we produce a 5"x7" index card configured approximately as illustrated in Enclosure 1. Each of these cards would contain the following data:

Title, author, and date information

An arbitrarily assigned document number (which would be stamped or otherwise entered on the source document)

The UMTA assigned project number

Up to twelve keywords

An abstract (of around three hundred words)

Each of these cards would be reproduced as many times as it had keywords, and would be filed under each keyword, by (arbitrary)

document number in a file or files organized (obviously) by keyword. The original card would be stored in a file organized in document number sequence. An additional index file by project type and number could also be maintained if desirable.

The source documents themselves would be stored in sequence by document number. A master list of keywords would of course be maintained.

This method would allow easy retrieval of documents by up to several keywords. If, for example, one desired information concerning reverse commuting by rail from New York City to Norwalk, Connecticut (although to my knowledge none exists), the index cards filed under the keyword phrase "reverse commuting" could be examined, and the cards "eyeballed" for the presence of the keyword phrases "New York City", "rail" and "Norwalk, Connecticut". This relatively simple procedure would yield a suprisingly great degree of selectivity in retrieval. The documents meeting the selection criteria would then be accessed by their document numbers and reviewed, reproduced or whatever, as appropriate.

I trust that this tentative working plan will meet with your approval.

Thank you for the cherries.

Sincerely yours,

P. A. Duckworth

P. Andrew Duckworth
Project Director

Enclosure

PAD/bd

Title, Authors, Date, etc. xxxx
xxxxxxxxxxxxxxxxxxxxxxxxxxxxx

Document #xxxxx
Project #xxxxxx

Keyword
Keyword
Keyword

Keyword
Keyword
Keyword

Keyword
Keyword
Keyword

Abstract xxxxxxxxxxxxxxxxxxxxxxxxxxxxxxxxxxxxxxxxxxx
xxxxxxxxxxxxxxxxxxxxxxxxxxxxxxxxxxxxxxxxxxxxxxxxxxx
xxxxxxxxxxxxxxxxxxxxxxx

TRANSCENDENTAL CORPORATION
1629 K Street N.W., Suite 520
Washington, D.C. 20006
(202) 296-7984

May 25, 1971

Department of Transportation
Office of the Secretary
Procurement Operations Division, TAD-43
400 7th Street, S.W. Room 9132
Washington, D.C. 20590

Reference: Request for Proposal to Accomplish Additional Work.
DOT-UT-10013 (SBA-0578-8(a)71)
Statement of Work: DOT-UT-353-4

Dear Sir:

We are submitting for your consideration this proposal outlining our plan to carry out all technical services related to the gathering, reviewing and transcribing of data as described in work statement DOT-UT-353-4.

Attached are four copies of the proposal. Mr. Marion D. Greene, Jr. can conduct negotiations and bind the company. He can be reached at (202) 296-7984 or (301) 593-7472 after 5:30 P.M.

Sincerely,

Marion D. Greene, Jr.
President

Transcendental Corporation proposes to first establish a system of guidelines and instructions for its staff to follow in gathering, reviewing and transcribing data from UMTA's technical scientific reports and studies.

In establishing the basic rules for the staff to follow, there will be three basic types of data considered from each technical report:

1. Identification Information: title, subtitle, subject data, authors, contractor, contractor number, date, et cetera.
2. Report Abstract: which will be extracted in brief form according to established guidelines.
3. Keywords and keyword phrases: which will be extracted for indexing and cross referencing.

TC will develop a detailed Thesaurus such that each document can be referenced by several identifiers and variables.

This shall consist of a master list of keywords and keyword phrases so that all staff personnel will have a ready reference that will insure uniformity and consistency. This master reference list will be categorized and listed by hierarchy and alphabet.

As the work progresses this master list will be constantly reviewed and updated. Allowances will be made for additions, deletions and unique word combinations. It is very important that the system established for abstracting and indexing accommodate future changes and modifications; TC envisions new words, phrases, and indices coming about in the future such as mass transit, rapid rail, monorail, cloverleaf, microsecond, et cetera. Accordingly, the instruction and rules for the staff will allow changes to occur with a minimum of problems.

PERSONNEL

TC will make available a professional consultant experienced in data extraction, transcription and indexing for the initial development of the formats, guidelines and staff procedure.

TC will make available three experienced staff members to actually review each technical and scientific report. These persons will be well trained and tested to insure that the work is performed with the greatest care and attention to detail.

The staff will be encouraged to continuously ask questions and make suggestions in order to develop a team spirit. Since volume and quality are very important to the success of this project, TC will insist that it's staff keep a rather fast pace.

JACK S. FISHER

PROFESSIONAL HISTORY

Director of Public Relations, Delta Automated Systems, Inc. This corporation is newly formed (as of October 1, 1970) from the merger of three metropolitan Washington area computer firms: Delta Data Systems, Inc.; National Institutes of Computer Professions, Inc.; and Computer Marketing Industries, Inc. As Public Relations Director, it was his responsibility to promote the merger through the EDP trade press, the financial trade press, and several geographical markets, including, of course, the Washington newspapers.

He held the same position with Delta Data Systems, Inc., prior to the merger. In this capacity he was totally responsible for all promotional campaigns for Delta Data Systems and its two subsidiaries, Delta Caribe, Inc. (San Juan), and Association Processing Corporation (Philadelphia). He conducted a daily press release campaign aimed at specific markets (i.e., new product announcements, personnel promotions, contract awards, office openings, acquisitions, etc.). His material aggregated several thousand column inches in nearly every EDP trade journal, in many financial and professional publications, and in newspapers across the nation. He coordinated official Open Houses for Delta subsidiaries. He is bi-lingual (Spanish) and, therefore, was totally responsible for promotional activities in Puerto Rico for Delta Caribe. He also oversaw all publication activities for Delta and subsidiaries, with respect to informational and marketing materials.

Concurrently, he directed the marketing activities for a year-old Division that he helped form: the Proprietary Systems Division. The product line offered by this division includes proprietary computer software systems for such applications as Accounts Payable, Accounts Receivable, Payroll-Personnel, and General Ledger. He was personally responsible for national accounts, and sold $230,000 worth (at approximately $12,000 each) during the last 18 months. He also oversaw the activities of three regional sales agencies, who covered, respectively, New England, a five-state Midwest region, and a seven-state Mid-Atlantic region. It was also his responsibility to analyze the product line and make change recommendations that would best suit the primary market for Delta's proprietary systems: Bank customer service operations, and commercial service bureaus.

He participated in corporate-level decisions with respect to acquisitions, mergers, marketing, personnel policies, public relations and advertising. Other members included the president, executive vice president, and treasurer.

He was responsible for the timely and accurate preparation of all technical proposals prepared for both military and commercial clients. He also set standards for technical documentation of all systems and programming efforts undertaken by Delta, including client user and operator documentation that accompanies each proprietary system sold by Delta.

Proposal Director, C-E-I-R Professional Services Division of Control Data Corporation. He was responsible for timely and accurate completion of all technical and pricing proposals. He coordinated final proposal inputs between Management, Marketing, and five Operations Directorates. He established formats, preparation procedures, style guidelines, and deadlines. He had final editorial authority, and coordinated reproduction with the press room.

Information Systems Specialist/Technical Editor, United States Underseas Cable Corporation. He was involved in the marketing effort with respect to information systems and technical publication services, dealing with several Government agencies. He had final responsibility for editing and production of all technical and pricing proposals, advertising literature and job brochures, as well as engineering and marketing reports.

City Editor, THE ENTERPRISE. He had final editorial responsibility for this Southern Maryland weekly newspaper (circulation 12,000). Oversaw the efforts of six reporters and a photographer. Personally covered police, courthouse, and state politic beats. Also was one of two photographers contributing regularly to the paper.

Journalist, U.S. Navy. He was Layout Editor and re-write man for two years on the staff of DIRECTION magazine. This monthly publication was aimed at Navy Public Affairs Officers and Commanding Officers, and then had a circulation of 120,000. This and other publications to which he contributed had a combined monthly readership of over one million.

He was a Radio-Television newswriter and commentator in the Panama Canal Zone, assigned to the Southern Command Network, an affiliate of the Armed Forces Radio and Television Service. He was responsible for the preparation and broadcasting of more than two hours of news material daily, both on radio and television. He did live coverage, on-scene, of the Panama Canal Zone riots of 1964. He is experienced as a TV Director, Audio Technician, Cameraman, and Disc Jockey. His newscasts were made both in Spanish and English.

PERSONAL INFORMATION

Age: 27
Married (no children)
Education: St. Mary's College of Maryland
U.S. Navy School of Journalism
USAF School for Latin America (Spanish)

RESUME

Name: Mary Anne V. McCarthy
Address: 1220 East-West Highway, Apt. 1216, Silver Spring, Maryland
Phone: (301) 588-2735
Date of Birth: 27 August 1946

Education. September 1968 to the present: A graduate student in the Psychology Department, University of Maryland, College Park, Maryland 20742. Master's degree (general psychology) awarded in August 1970; requirements for the doctoral degree (major area: social psychology; minor area: industrial psychology) to be completed in January 1972.

September 1964 to June 1968: Attended Trinity College, Washington, D. C. 20017. B.A. in philosophy awarded with honors in June 1968; strong minors in pre-medical studies and in psychology.

September 1960 to June 1964: Attended Bishop Denis J. O'Connell High School in Arlington, Virginia 22205; graduated in June 1964.

Experience. September 1968 to the present: Employed as a graduate teaching assistant by the Psychology Department, University of Maryland. In this capacity, assisted in an upper-division course in experimental social psychology, advising senior undergraduates in the design, execution and analysis of their original experiments. Duties included programming in FORTRAN IV and V for the University's IBM 7094 and UNIVAC 1108 computers. Immediate supervisor: Dalmas Taylor, Ph.D. Salary: $300.00 per month, plus remission of tuition for graduate courses.

June 1970 to October 1970: Employed as a science writer by Biospherics, Inc., 4928 Wyaconda Road, Rockville, Maryland. In this capacity, summarized and evaluated research proposals and reports submitted to the National Institute of Mental Health by scientists in various social, psychological and bio-medical specialities. This position required familiarity with current developments in such fields as computer simulation, psychopharmacology, experimental psychology, and man-machine interaction. Immediate supervisor: (Miss) Claire Drullard. Salary: $640.00 per month.

June 1969 to September 1969: Employed as a technical editor by THOR, Inc., 8055 13th Street, Silver Spring, Maryland 20910. In this capacity, edited the FAA report on Air Traffic Control from rough drafts to final copy. Immediate supervisor: (Miss) Carole Brownlee. Salary: $560.00 per month.

Honors. Summer, 1970: Awarded a teaching assistantship by the Psychology Department, University of Maryland.

1968: Awarded a stipend for graduate study in clinical psychology by both The American University and The Catholic University, Washington, D. C.

1964 to 1968: Full-tuition academic scholarships awarded by Trinity College, Washington, D. C.

1963: State (Virginia) semi-finalist in the Westinghouse Science Talent Search.

June 1963 to August 1963: National Science Foundation Fellowship for summer study at the Georgetown University School of Medicine, Washington, D. C.

June 1962 to August 1962: National Science Foundation Fellowship for summer study, awarded through Howard University, Washington, D. C. The summer was spent in the construction of a nuclear magnetic resonance absorption apparatus, under the direction of Mr. Oded ben Dov. The apparatus was awarded third prize in the senior division of the High School Science Fair for Arlington County, Autumn, 1962.

Activities. Current interests include: reading and writing science fiction, photography, and sewing. Journals and magazines read regularly: Journal of Personality and Social Psychology, Journal of Applied Psychology, Psychological Bulletin, Personnel Administration, and The National Geographic.

BUDGET

80 professional man hours @ $8.20	$ 656.00
1,600 estimated man hours reviewing, extracting,-indexing @8.82 hour billing rate to UMTA	$14,112.00
estimated total price	$14,768.00

Optional

A typing and clerical person will be made available at a billing rate of $5.75 per hour.

ZIMMERMAN	$ 8,500
ROSALER	$ 9,200
McCARTHY	$10,000
	$27,700

$27,700 / 3 = $9,233 average

$ 9,233 / 2000 hours per yr. = $4.62 avg. hourly

$ 8,500 / 2000 " " " = $4.25 " "

$4.62 + $4.20 (91%)* = $8.82

$4.25 + $3.86 (91%) = $7.91

*
DOT audited and approved consolidated overhead rate.

UNITED STATES GOVERNMENT

Memorandum

DEPARTMENT OF TRANSPORTATION
URBAN MASS TRANSPORTATION ADMINISTRATION

DATE: May 17, 1971

In reply refer to:

SUBJECT: National Technical Information Service Microfiche Subscription Service

FROM : Assistant Administrator for Public Affairs

THRU: Deputy Administrator DSA

TO : Assistant Administrator for Administration

We have a pressing need and anticipate an even heavier future demand for a complete file of UMTA project reports and studies. In order to efficiently utilize information gained through completed projects an efficient information retrieval system is essential. Space and personnel being at a premium, microfiche copies are less expensive to acquire and maintain than printed copies and they are less likely to disappear.

In order to keep current on clearinghouse acquisitions after the UMTA bibliography is completed later this month, I propose that we subscribe to the Clearinghouse microfiche service now and acquire microfiche copies of all reports in the near future. By subscription copies are 35¢ each, individually they are 95¢ each. We estimate the cost of the subscription service will be $60 per year.

A reading machine will also be required, prices vary from a few dollars for a simple machine and up for machines with a print-out capability. The print-out machine would be desirable, the cost negligible when considering the thousands of dollars we can save the cities by reducing duplication of effort in planning transit systems. Prices will be obtained and a procurement made in light of all factors.

This capability will make it possible for UMTA to furnish specific information on projects UMTA has financed.

C. Carroll Carter

Jim Webb
See what they want
& phone order

HB
5/20/71

.9 K

UNITED STATES GOVERNMENT

Memorandum

DEPARTMENT OF TRANSPORTATION
URBAN MASS TRANSPORTATION ADMINISTRATION

DATE: May 20, 1971

In reply refer to:

SUBJECT: National Technical Information Service Microfiche Subscription Service

FROM : Assistant Administrator for Administration

TO : Assistant Administrator for Public Affairs

Implied in your memorandum on the above subject is that a reading machine with print-out capability would be used to prepare copies of reports to be forwarded to our "clientele" in the transit world. If this is your intent, I must firmly take exception to such a proposal. This would put us in direct competition with the National Technical Information Service which is staffed, equipped, organized and charged to act as the Federal government's broker for all reports and studies funded with government assistance. In addition, by law, at any but the smallest scale, providing reports to the public would require UMTA to establish positions and pricing and cash collection procedures to carry this out. This we can not do.

As soon as the above is clarified, we are prepared to give you immediate assistance in the search for and procurement of the required items. Presently, we have a deposit account with the N.T.I.S. which will greatly facilitate the procurement of the microfiche service.

W. H. Boswell

cc: Deputy Administrator

TRA CENDENTAL CORPORATION
1629 K Street N.W., Suite 520
Washington, D.C. 20006
(202) 296-7984

May 2,1971

Mr. A.B. Hallman
Department of Transportation
400 7 th Street, S.W.
Washington, D.C.

Dear Mr. Hallman:

In order to futher assist the Urban Mass Transportation Administration in its efforts to collect and abstract all of its technical reports the following course of action is proposed.

Personnel College level experienced abstracting personnel will be provided to assist in the more complicated collection and assembling of all technical reports that are to be used as input to the final management information system.

Keywording A master list or dictionary of keywords will be compiled and defined for the benefit of all abstracting personnel. The master list will be catagorized and continous reviews will be made along with the contracting officer. The keyword master list will be purified as time progresses. Consideration will be made for unique words and unique word combinations.

Abstracting Abstracting guidelines will be developed so as to coordinate and insure continuing consistency throughout the project. A random sampling of the technical documents will be used to determine the viability of the keyword list as it relates to the phrases and established cross indexes. In conjunction with the UMTA contracting officer character and word limits will be established so that uniformity in abstracting patterns will be ensured.

Indexing Procedures for the sequential indexing will be established. Various types of indices will be used as cross references. As an example the abstracted information will have a capability of being indexed by title, by keyword, by phrase, by document number, by subtitle,etc.

Thesaurus Development As the abstracting and keyword development is taking place a detailed Thesaurus will be developed. Eventually a capability to reference each report by several variables and parameters will exist.

Costing It is estimated that the total keywording, abstracting, indexing, etc.will take 2000 man hours at a billing rate to UMTA of $7.50 per hour which includes overhead burden and profit. The estimated total cost is $15,000.

Sincerely,

Marion Greene, Jr.

UNITED STATES GOVERNMENT

Memorandum

DEPARTMENT OF TRANSPORTATION
URBAN MASS TRANSPORTATION ADMINISTRATION

DATE: APR 28 1971

In reply refer to:

SUBJECT: Retrieval of Reports

FROM : Deputy Administrator

TO : UMTA Staff

We are attempting to collect all UMTA reports generated from research grants, university grants and technical studies in order to have these maintained in a single place for easy reference. We are also going to abstract these and make the abstracts readily available by key words through a retrieval system. The following is a list of those reports which are missing from our central files. Would you kindly check in your desk, files, book shelves to see if you have any of the missing reports and send them to Harriet Hawkins-UAD-10.

William S. Allison

William S. Allison

cc: UGA

Demonstration Projects

CAL-MTD-8	Skylounge System
DC-MTD-2	The Minibus in Washington, D. C.
MASS-MTD-1	Mass. Transportation in Massachusetts
NY-MTD-6	VIP - Transportation (Rome, N. Y.)
TENN-MTD-1	Mass. Transportation Studies in Memphis
INT-MTD-5	Suburban Service Adjustment Service (New York Central Harlem Division)

Technical Studies Projects

MICH-T9-2	City of Ann Arbor
OHIO-T9-1	Akron Metropolitan Regional Transit Authority
VA-T9-2	Fairfax Co. Va. - Reston
INT-T9-3	Kansas City Area Transportation Authority
CAL-T9-6	City of San Jose
CAL-T9-8	City of San Diego
CAL-T9-9	Oakland Airport Access Task Force
FLA-T9-2	City of Hollywood
MINN-T9-1	Twin Cities Area Metro. Transit Commission
ORE-T9-2	City of Portland

April 2, 1971

Conversation with Carroll Carter
RE: Retrieval System for UMTA Reports

Carroll still talks about the BIG picture of having a bibliography of all transportation reports having to do with urban mass. I agreed that on the long term this is commendable but short term goals as I understand it is to be able to retrieve UMTA information. I also discussed with him the use of non-librarians to abstract our reports, and he seemed agreeable to this. I asked him about budget, and he said there was no such thing and not to worry about it. I told Carroll I would prepare the key word index and we discussed various ways of doing this.

Conversation with A.B. Hallman
RE:

I discussed with A.B. use of members of his minority firm in abstracting our reports and coding the abstracts to get the information into the computer he is contracting with. He threw this back at me with a description of a very limited retrieval system developed at NASA which is designed to store and for retrieval of only the kind of reports we are interested in. This system does not have the flexibility of the large computer systems necessary to produce instantaneously a wide variety of data. As we are talking about only report retrieval using key words (descriptors of projects, possibly geographic locations and anything else we deside) only, we probably don't need to tie into an elaborate, costly system. A.B. is going to arrange a preview of this system for me.

MOREY

DEPARTMENT OF TRANSPORTATION
URBAN MASS TRANSPORTATION ADMINISTRATION
WASHINGTON, D.C. 20590

OFFICE OF
THE ADMINISTRATOR

March 24, 1971

Conversation with Carroll Carter
Re: UMTA Reports

C. C. wants the following three efforts performed immediately and stated them in this priority order:

1) UMTA to contribute to Highway Research Board in order to have UMTA reports cataloged in Highway Research Information Service (HRIS).

2) Assignment of 2 librarians from OST to UMTA who will catalog (including writing abstract) and index all UMTA Research Reports, and Technical Studies. Hopefully, one of the librarians will have familiarity with computer language.

3) Physical compilation of all UMTA Reports to be housed in Office of Public Affairs.

Regarding 1st Point

The HRB compiles selected abstracts of papers generated by Bureau of Public Roads, British Road Research Laboratory, Canadian Good Road Association, American Society of Civil Engineers, National Cooperative Highway Research Program, universities and others. I talked to Mr. Hoshovsky in TST, who is DOT representative to Board. I asked him what the Board could do for UMTA and what the costs were for sponsors. After listening to drivel about our not fulfilling our responsibilities - and I asked him did he mean to the public - he said "no" to the government, but he really meant to the Board - he said he was going to see that each administration pick up their fair share of the costs of the Board. He did say that we should get our shop in order as far as our own reports were concerned and then he should come in and help us plan our involvement with the Board. Anyway, this action is a long way off and Hoshovsky agreed.

Regarding 2nd Point

Carroll Carter requested the loan of 2 librarians from OST thru Heffelfinger. This was bated about for a bit and ended up in Office of Administration - management systems branch and specifically with a guy named Len Johnson. Somehow Hoshovsky got involved and the recommendation is now going back up the line that we do not get these librarians. I frankly at this point don't believe we need librarians as our primary goal is to get past UMTA funded projects into our computer information retrubal system. This simply requires compilation of a key word index which has already been started - see SI-1 of Directory of RD & D projects - other possible retrieval modes and abstracts of the finished reports. I don't feel that it is necessary to have professional librarians perform this task. A. B. Hallman has a minority business on contract, who are programming current project data for the M/S and he feels that this firm could make qualified individuals available to us to perform these tasks. Carroll's desire for librarians seems to stem from the idea that they must know all the library numbering systems estant so our reports can be coded to fit the National Technical Information Service (formerly Commerce Clearing House) system, the Library of Congress system, university library systems, the Highway Research Board System, and so on and so on. For the short term, I think this is absurd, and I really donlt see the need at anytime for number systems compatibility. The DOT library is presently receiving copies of our reports as is, of course, National Technical Information Service.

Regarding 3rd Point

Our files are now being checked to see what reports we do here. After that, I propose sending a list internally of those reports we're missing in order to retrieve copies which individuals might have hidden in their files. After that, we'll track through the various libraries, HUD, Congress, et al. This is priority #1 as far as I'm concerned and I am proceeding with it on that basis.

The other thing which should be in the works is the compilation of key word index which I feel has basically been started in the RDD directory. I propose we send a memo to the special assistants in each office and ask them to add to this any words they can think of which they postulate we might wish information on. Agreed?

Miss Helvesine
Key Words
DOT - Miss Burk
✓ Doug's Book
HUD
HRB - Faulkner
CEC
✓ Lib of Congress
KE
Mr. Neuringer

March 9, 1971

Catalog, Index and Abstract of Urban Transportation Reports, UMTA Financed Projects

UPA-1

Assistant Administrator for Public Affairs, UMTA

Assistant Administrator for Administration, UAD-1

Would you kindly mark the attached copy of the RD&D Directory showing availability of reports on UMTA sponsored projects.

For each report, please indicate:

1. Report in UMTA file,

2. Report on file at Clearinghouse (National Technical Information Center),

3. Report available only from grantee or contractor, or

4. Other.

We are proceeding to collect catalogue, index and abstract of urban transportation reports from UMTA financed projects. The first step is to determine the exact status of the availability of reports and collect them in one place.

Please pull file copy of the report and have delivered to this office. Indicate in the file record that the report temporarily is assigned to the Office of Public Affairs. Only by collecting all reports will we be able to determine key word index and scope of urban transportation reports indexing requirements.

C. Carroll Carter

cc: UOA-1, Cross
UOA-2, Allison

March 9, 1971

UPA-1

Catalog, Index and Abstracts of Urban
Transportation Reports, UMTA Financed Projects

Assistant Administrator for Public Affairs, UMTA

Assistant Administrator for Administration, UAD-1

Would you kindly insert the attached copy of the RDGID Directory showing availability of reports on UMTA sponsored projects.

For each report, please indicate:

1. Report in UMTA file.

2. Report on file at Clearinghouse (National Technical Information Center).

3. Report available only from grantee or contractor, or

4. Other.

We are processing to collect catalogue, index and abstract of urban transportation reports from UMTA financed projects. The first step is to determine the local status of the availability of reports and collect them in one place.

Please call the copy of the report and have delivered to this office. Indicate in the file record that the report temporarily is assigned to the Office of Public Affairs. Only by collecting all reports will we be able to determine key word index and scope of urban transportation reports indexing requirements.

C. Carroll Carter

cc: UOA-1, C. Ms
UOA-3, Allison

February 9, 1971

Urban Transportation Reports UPA-1

Assistant Administrator for Public Affairs

Deputy Administrator, UMTA

More than a year ago, I proposed that UMTA organize, catalogue and index all reports from Federally financed urban transportation projects.

1. We need to assemble, index, abstract and catalogue reports growing out of UMTA projects and publish the results in such a way as to give them the widest possible distribution in the urban transportation field.

2. Mr. A. B. Hallman and I have discussed the matter and we are proceeding to determine what needs to be done. The Management Information and Control System (MIC) can carry an easily retrievable reference to reports on file, but for the most part, the MIC will develop data and information for project management purposes rather than history and report references. So although the MIC can tell us whether we have a report, we need to see whether it should be used for keeping our urban transportation reports file and updating it.

3. I am reviewing what is presently being done by NASA, Lockheed, and the Library of Congress on computerized reference retrieval. A. B. Hallman is reviewing what is being done in HUD, the Highway Research Board, and by various software contractors who are now presently engaged in this work.

4. We will complete this preliminary evaluation and have some suggestions for the executive staff to consider shortly.

5. At present, there is no complete, single source for copies of UMTA reports. Some are in our project files, some are at the National Technical Information Service. At some point we will need to assemble a single, original file copy of all reports as the data base from which our urban transportation reports will be built.

6. Some weeks ago, we proceeded with having the National Technical Information Service prepare for us their bibliography on urban transportation, including our reports, and that work is proceeding. DONE

C. Carroll Carter

cc: UOA-1, info; UAD-1, Hallman; UOA-2, Cass