GPS Antenna Data Needed

GPS Adjacent Band Compatibility Workshop
Volpe Center, Cambridge MA

Date: 09/18/2014

Presenter: George Dimos
Hadi Wassaf, Ph.D.
Stephen Mackey

Topics

1. Technical Objective: Receiver Antenna Mask and Electronics Data
2. Definition of Receiver Antenna Mask
3. Use of Receiver Antenna Mask
4. Approaches to Generate the Antenna Mask
5. Request for Receiver Antenna Data
6. Next Steps

Technical Objective: Receiver Antenna Mask and Electronics Data

Generate models of antenna gain masks for all existing categories of GPS receivers (except the FAA certified GPS receivers) in the L1 band and obtain RF electronics specifications for the active antennas

Technical Objective: Receiver Antenna Mask and Electronics Data

Example of receiver antenna mask: the antenna mask for certified aviation GPS receivers [ref: RTCA DO 327, fig. 2-2,3]

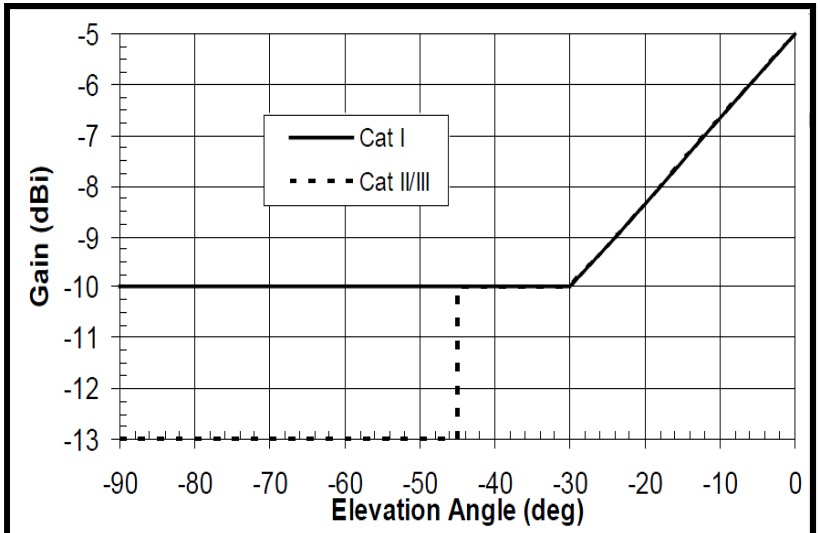

Figure 2-2 GPS Receive Antenna Lower Hemisphere Max. Gain Model
(G_{RCV-1} = -10 dBi for -90° ≤ el <-30°; = -10+(5+elev/6) for -30°≤ el ≤ 0°)
(G_{RCV-2} = -13 dBi, el <-45°, = -10 dBi,-45° < el < -30°; =-10+(5+el/6), -30°≤ el ≤ 0°)

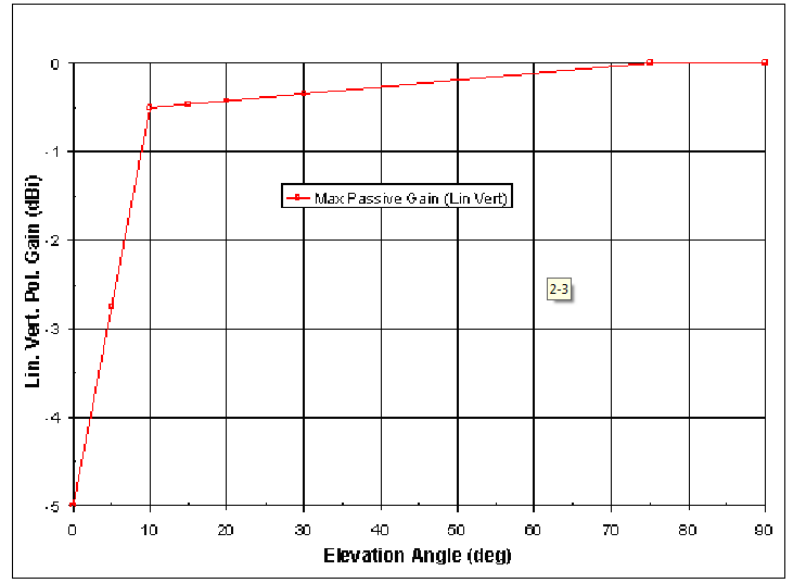

Figure 2-3 GPS Receive Antenna Upper Hemisphere Max. Gain Model
G_{RCV} = 0 dBi, 75°≤ el; = -0.5+0.0077·(el-10), 10°≤ el ≤ 75°; = -5+4.5·el, 0 ≤ el < 10°)

Near the ground GPS applications will depend mostly on the upper hemisphere pattern

- ***Vertical polarization more appropriate for interference from wireless networks***
- ***Antenna gain: 0 dBi at zenith, (-5) dBi at horizon***
- ***3-degrees of freedom model for CAT-I elevation mask near the horizon***

Definition of Receiver Antenna Mask (1/3)

- Assume that the receiver antenna is omni-directional with respect to the azimuth pattern ← reasonable assumption, as shown later.
- The receiver antenna mask then refers to the elevation antenna pattern.
- For near-the-ground GPS applications, the receiver antenna will be below the transmitter antennas and therefore it will affect the generated interference through its upper-hemisphere elevation pattern.
- The lower-hemisphere elevation pattern affects the contributed interference from ground reflections.
- For the vast majority of the interference sources, the contributed interference will be mainly affected by the receiver antenna characteristics near the horizon
- It is desirable to obtain the vertical polarization gain for interference calculations, or generate it from the circular polarization gain which is typically available for GPS antennas.

Definition of Antenna Mask (2/3)

- We stress the need to obtain the antenna gain pattern in units of dBi. That is:
  - That is, the gain relative to an ideal isotropic antenna with an aperture size of $\frac{\lambda^2}{4\pi}$ and no losses.
  - This means that any antenna losses or gains relative to the ideal isotropic antenna are factored in this antenna dBi gain pattern
  - This should pertain only to the passive antenna or the passive section of an active antenna. The information needed for the active part are discussed later in this brief.
- Circular and vertical polarization gain patterns are desired. In the absence of a vertical pattern, a nominal reduction factor (or offset in dB) is needed to derive the vertical polarization gain pattern from the circular one

Definition of Receiver Antenna Mask (3/3)

Example of simplified receiver antenna mask for parameter sensitivity studies of interference modeling.

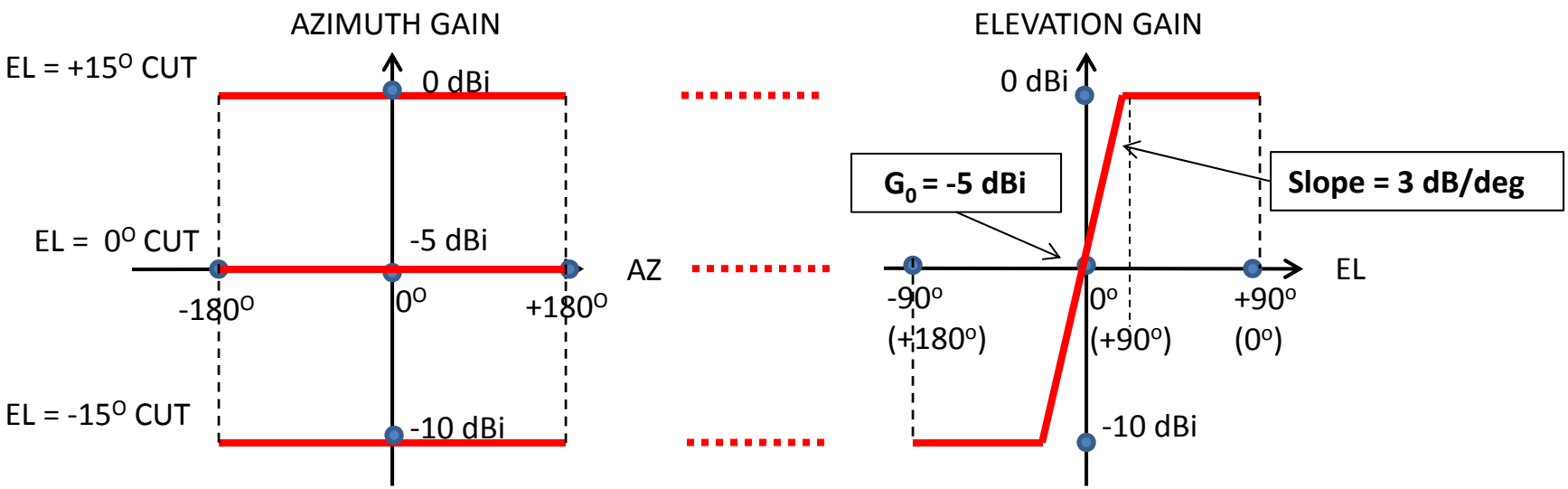

omni-directional antenna

2-degrees of freedom model of the elevation mask near the horizon

Use of Receiver Antenna Mask and Electronics Data

- The Receiver Antenna Mask models the receiver antenna pattern in order to generate the variable (Receiver Antenna Gain), which is necessary for the task of modeling the interference generated by a network of wireless sources.
- (Receiver Antenna Gain) is one of the factors determining the interference power affecting a GPS receiver. The other factors are:
  - (Transmitter EIRP) which is the search variable,
  - (Transmitter Antenna Relative Gain) which has been modelled for base stations, as shown in the next page, and
  - (Propagation Loss) which uses the transmitter/receiver geometry of the interference scenario and established models for RF propagation.
- The assumptions regarding the Receiver Antenna Mask can easily affect the estimated interference by 10 dB.

Use of Receiver Antenna Mask and Electronics Data

Example of transmitter antenna mask: the antenna mask ATC base station transmitters [ref: RTCA DO 327, fig. 2-7,8]

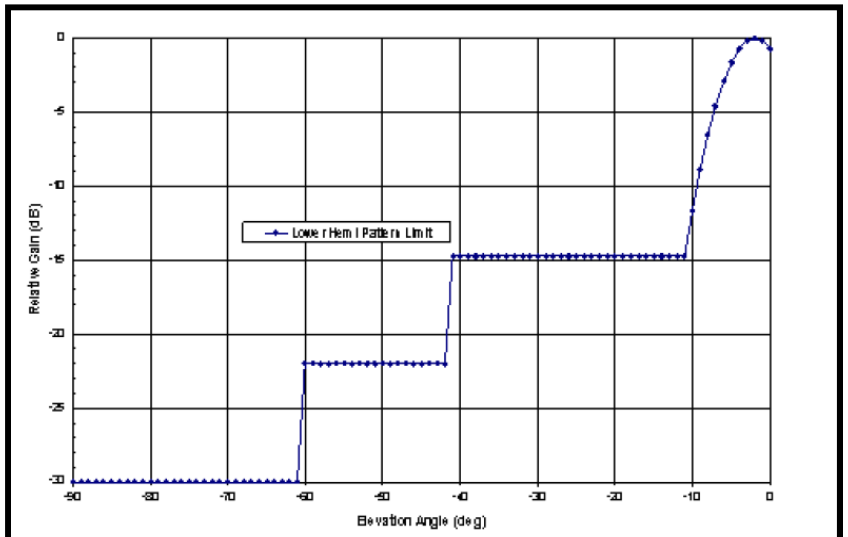

gure 2-7 ATCt Base Station Lower Hemisphere Vertical Gain Pattern Model

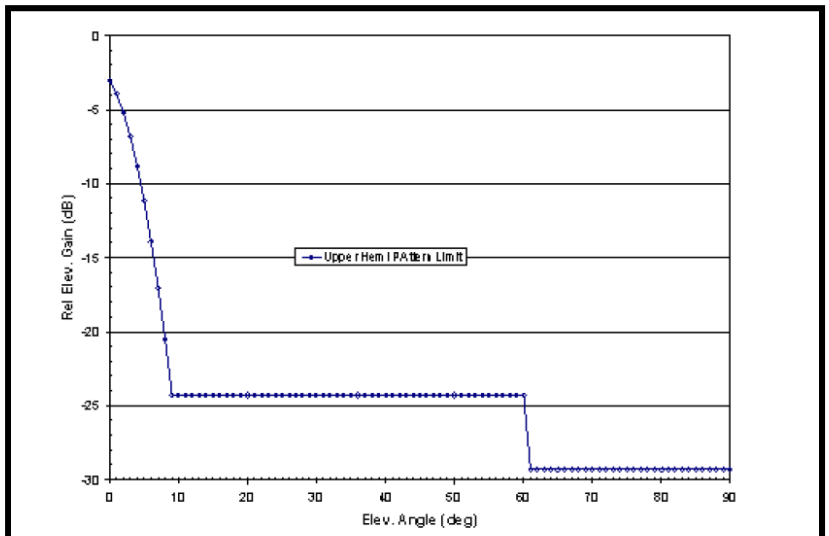

Figure 2-8 ATCt Base Station Upper Hemisphere Vertical Gain Pattern Model

Near the ground GPS applications will depend mostly on the lower hemisphere pattern

- *Vertical polarization more appropriate for interference*
- *Relative Gain: 0 dBi at peak → requires EIRP*

Use of Receiver Antenna Mask and Electronics Data

- The Receiver Antenna Electronics affects the performance of receiver front end, and therefore such information is necessary for the GPS Adjacent Band Compatibility program task of modeling the receiver interference mask.

- This information includes noise figure, 1-dB compression power, RF filtering characteristic, and RF architecture.

- This information pertains to an active antenna, and although provided separately it will be combined later with similar information of the GPS receivers using that active antenna.

Approaches to Generate the Receiver Antenna Mask

- *ANTENNA MANUFACTURER DATA*
  - Antenna manufacturers identify representative models which have relatively large footprint in the GPS user community, and provide antenna masks for those models.
  - Collect GPS receiver antenna datasheets from the publicly available technical literature, and generate average elevation patterns
    → examples shown next

- *ANTENNA MODELING FOR INTERFERENCE CALCULATION*
  - Use simple receiver antenna masks to conduct sensitivity studies for the effect of the antenna pattern characteristics on the aggregate interference from a large network of wireless sources.
  - Adopt a receiver antenna model, similar to the approach taken for the transmitter antenna.
  - Need different antenna models for different receiver categories and/or antenna technologies.

Approaches to Generate the Receiver Antenna Mask

- *Notice difference between the directivity pattern and the gain pattern: gain at zenith is +4.5 dBi instead of -8 dBi*
  ➔ need additional information, besides directivity pattern, for interference analysis
  ➔ refer to the antenna gain at zenith as 'Reference Gain'

- *This issue is avoided for the transmitter antenna by using <u>relative</u> gain (max at 0 dBi) and EIRP*

- *About (-7) dBi gain at horizon*

- *Circular polarization*

Example of a GPS receiver antenna:
SENSOR SYSTEMS FRPA3 (Blue Book v1 pg. 342)

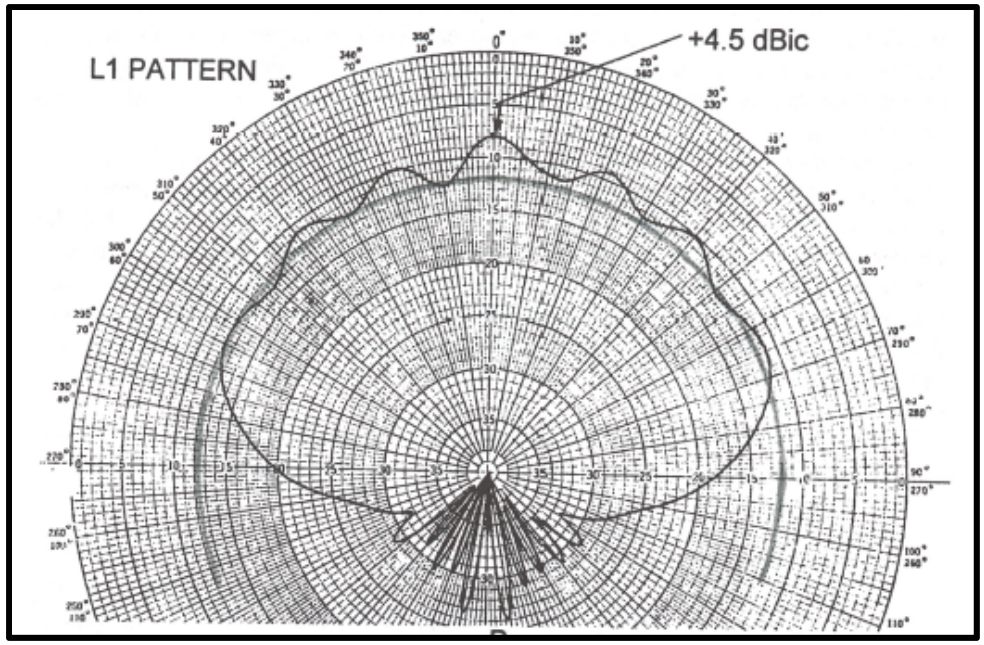

Approaches to Generate the Receiver Antenna Mask

SPECIFICATIONS

Part Number	Outline Dimension	Ground Plane
DAK1575MS50	25 mm	70 x 70mm

Center Frequency	1580.5 MHz*
Bandwidth	9 MHz min.
Impedance	50Ω
Gain @ Zenith **Gain @ 10° Elevation**	+5 dBi typical -1 dBi typical
Temperature Coefficient	20 ppm/°C max. (-40 to +105°C)
*Center frequency is shifted 5MHz down when covered with a radome.	

Example of a GPS receiver patch antenna: TOKO DAK series

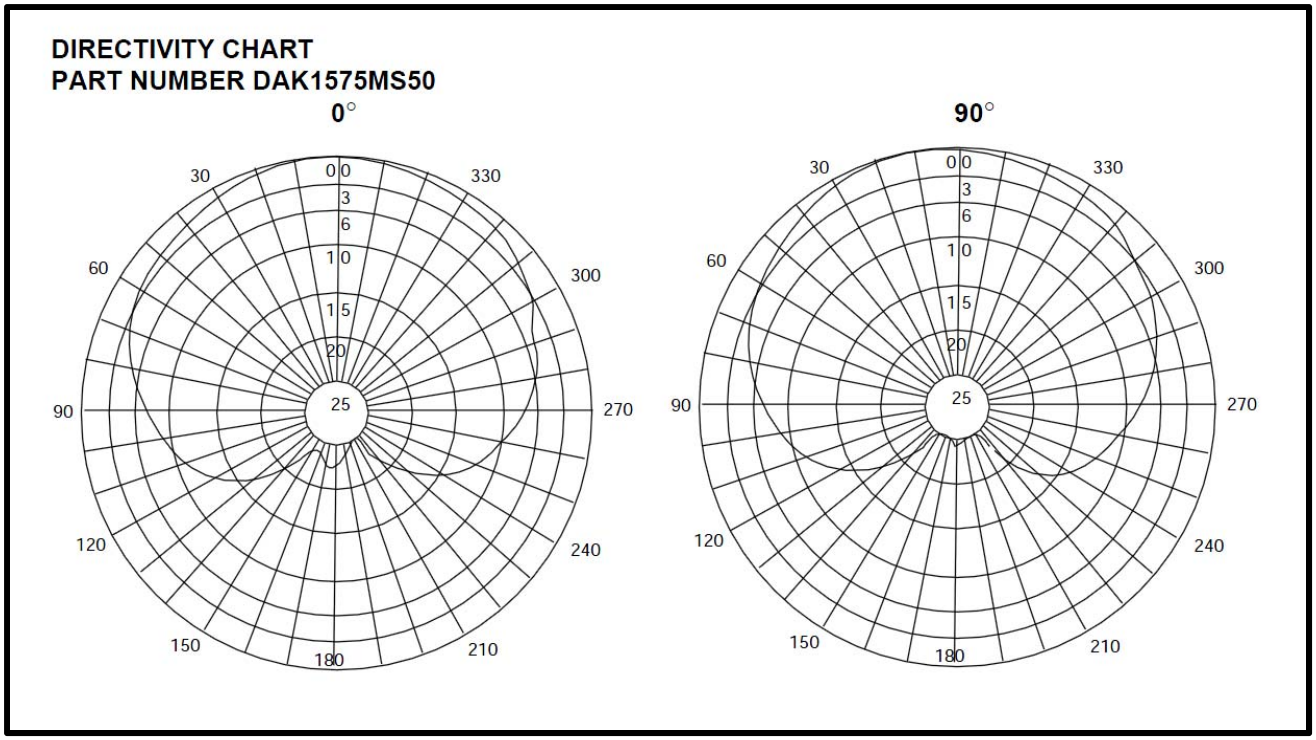

- ***Directivity and Ref. Gain provided***
- ***(– 2) dBi antenna gain at horizon***
- ***Slight asymmetry with respect to the omni-directional assumption as shown from the XZ (0°) and YZ (90°)cuts***

Approaches to Generate the Receiver Antenna Mask

	Geodetic	Rover	Handheld
Frequency Bands	Single to multiband	Single to multiband	Singleband
Bandwidth	Broadband	Narrow to Broadband	Narrowband
Radiation Pattern	Controlled	Controlled	Not controlled
Multipath suppression	High	Medium	None
Sensitivity	High	Medium to high	Low
Interference Handling	High rejection	Good rejection	Minimal rejection
Phase centre	Very important	Important	Not important
Dimensions	Large	Portable	Very small
Weight	Heavy	Portable	Lightweight
Cost	High	Medium	Low

Table 1: **GNSS antenna applications and characteristics.**

European Space Agency (ESA)
navipedia "Antennas"
(Fig.3: Example of patch antenna pattern)

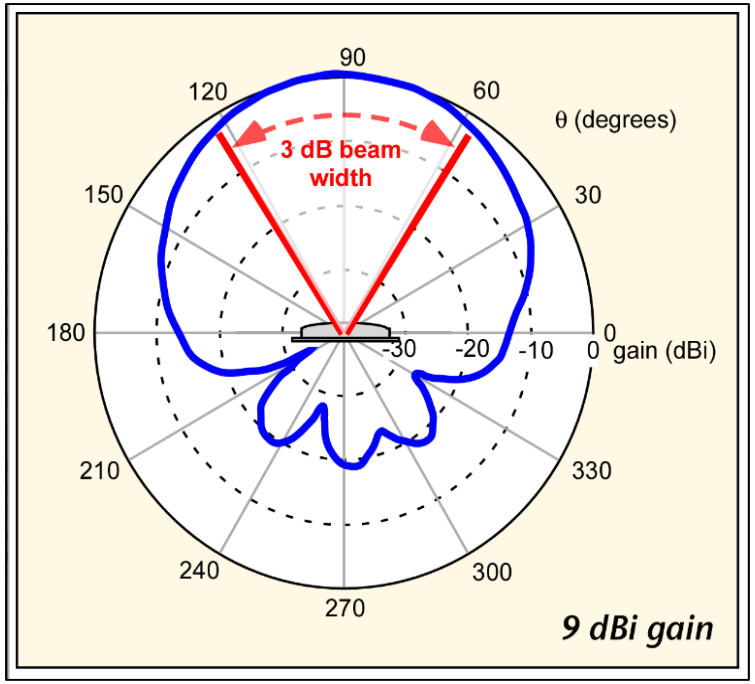

- ***If ref. gain = (+9) dBi, we have (+9) dBi at zenith and (-4) dBi at horizon***
  → unlikely for patch antenna

- ***We need different antenna models for different receiver categories***

Approaches to Generate the Receiver Antenna Mask

Electrical Characteristics at T_A = 20°C ± 5
Vcc = 3.30V, Frequency = 1575.42MHz

Parameter	Min	Typ	Max	Units
Frequency	1573.42	1575.42	1577.42	MHz
Vcc	3.0		5.0	V
Current		20		mA
Gain	18	20	24	dBic
Beamwidth		>120		degrees
Noise Figure		1.6		dB
VSWR			2.3:1	dB
Input Third-Order Intercept Point		-14		dBm
Operating Temperature Range	-40		+85	°C

Example of a GPS receiver quantrifilar helix active antenna: SARANTEL GeoHelix-H™

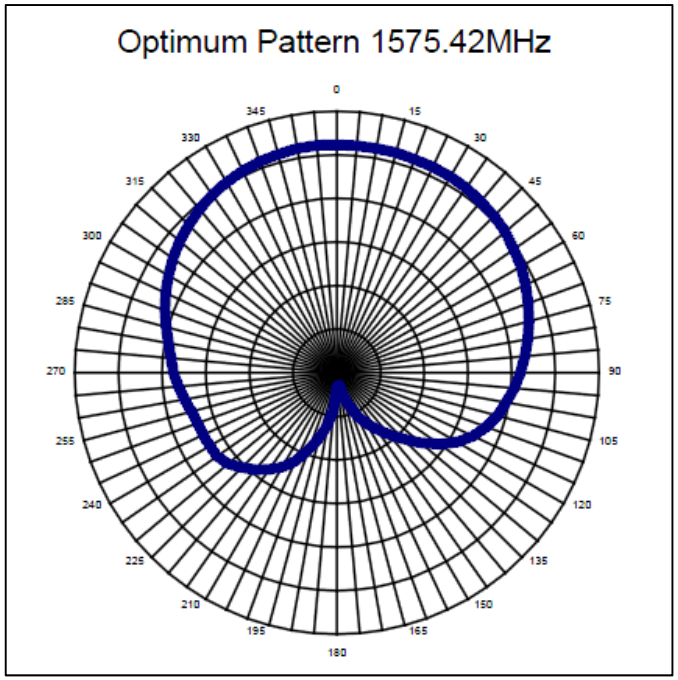

- *Ref. gain and directivity pattern unclear:*
  - *Gain has antenna pattern units but looks like RF preamp gain*
  - *Pattern does not have grid values*

- *Assuming 5 or 10 dB grid for pattern, antenna obtains (+20) dBi at zenith and (+15) or (+10) dBi at horizon*

Approaches to Generate the Receiver Antenna Mask

SPECIFICATIONS — **CHOKE RING/GPS S96-1575-139**

ELECTRICAL

Frequency	1575.42 MHz
VSWR	2.0:1
Polarization	RHCP
Impedance	50 ohms
Gain Coverage	+7.5 dBic @ 0° (zenith)
	+6.4 dBic @ 20°
	+3.2 dBic @ 40°
	-3.6 dBic @ 60°
	-8.7 dBic @ 80°
	-14.0 dBic @ 90°
Gain (preamp)	26.0 dB
Noise Figure	2.8 dB
Power Handling	1 watt
Voltage	+4 to +24 VDC
Current	25 mA
Lightning Protection	DC grounded

MECHANICAL

Weight	12.5 lbs.
Height	14.75 in.
Diameter	13.75 in.
Material	Radome - Polycarbonate
	Antenna - 6061-T6 aluminum / thermoset plastic
	Base - 6061-T6 aluminum
Finish	Radome - White polycarbonate
	Antenna - Skydrol resistant enamel
Connector	TNC

ENVIRONMENTAL

Temperature	-67°F to +185°F
Vibration	10 G's
Altitude	20,000 ft.

Example of a GPS receiver choke ring active antenna: SENSOR SYSTEMS Choke Ring/GPS

1575 MHz L1 & L2 available

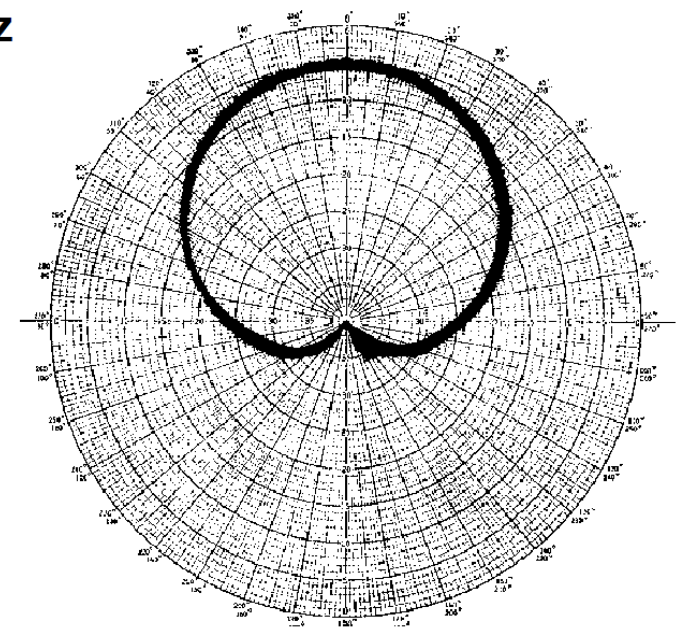

RADIATION PATTERN

- *Ref. gain and radiation pattern specified (5 dB grid) and preamp gain specified*
- *From (+7.5) dBi at zenith to (-14) dBi at horizon → 21.5 dB variation → very different from patch antenna*

Approaches to Generate the Receiver Antenna Mask

TRIMBLE GNSS CHOKE RING ANTENNA

Minimum tracking elevation	0 Degrees
Practical tracking elevation	<5 Degrees
Supported positioning signal bands	L1/L2/L5/G1/G2/G3/E1/E2/E5ab/E6/Compass
Supported SBAS signal bands	WAAS, EGNOS, QZSS, Gagan, MSAS, OmniStar
Phase-center accuracy	2 mm or better
Phase-center repeatability	<1 mm
Maximum phase-center eccentricity	2 mm
Antenna gain	50 dB ±2dB
LNA features	Advanced filtering to reduce interference by high power out-of-band transmitters
LNA signal margin	13 dB
Supply voltage	3.5 V DC to 20 V DC
Supply current (maximum)	125 mA
Power consumption (maximum)	440 mW
Dimensions	38 cm diameter x 14 cm height 15 in diameter x 5.5 in height
Weight	4.3 kg (9.5 lb)
Element type	Phase-ripple-tested Dorne & Margolin AIL C-146
Polarization	Right-hand circular
Axial ratio	2 dB at Zenith
Voltage Standing Wave Ratio	2.0 maximum
Left-hand circular polarization (LHCP)	20 dB minimum
RoHS compliant	No
Multipath mitigation technologies	LHCP rejection and 1/4 wave choke ring ground plane
Ground plane design	JPL designed 1/4 wave choke ring
Coaxial connector	N Female
External radome required	59314 available
NGS model available	Yes
NGS model with radome available	Yes
Shock rating	Demonstrated to survive a repeated 1 m (3.28 ft) drop onto plywood over concrete (all edges)
Vibration rating	4.3 GRMS, random vibration profile; Z axis only
Humidity	100% humidity proof, fully sealed
Temperature	
Operating	–40 °C to 70 °C (–40 °F to 158 °F)
Storage	–40 °C to 70 °C (–40 °F to 158 °F)
Mounting thread	5/8"–11 Female

ZEPHYR GEODETIC 2 GNSS ANTENNA

Minimum tracking elevation	0 Degrees
Practical tracking elevation	<3 Degrees
Supported positioning signal bands	L1/L2/L5/G1/G2/G3/E1/E2/E5ab/E6/Compass
Supported SBAS signal bands	WAAS, EGNOS, QZSS, Gagan, MSAS, OmniStar
Phase-center accuracy	2 mm or better
Phase-center repeatability	<1 mm
Maximum phase-center eccentricity	2 mm
Antenna gain	50 dB ±2 dB
LNA features	Advanced filtering to reduce interference by high power out-of-band transmitters
LNA signal margin	13 dB
Supply voltage	3.5 V DC to 20 V DC
Supply current (maximum)	125 mA
Power consumption (maximum)	440 mW
Dimensions	34.3 cm diameter x 7.6 cm height 13.5 in diameter x 3 in height
Weight	1.36 kg (3 lb)
Element type	Dual four-point-feed patch
Polarization	Enhanced right-hand circular
Axial ratio	2 dB at Zenith
Voltage Standing Wave Ratio	2.0 maximum
LHCP rejection at boresight	20 dB minimum
RoHS compliant	Yes
Multipath mitigation technologies	LHCP rejection and resistive ground plane
Ground plane design	Trimble Stealth resistive
Coaxial connector	TNC Female
External radome not required	46291-00 available
NGS model available	Yes
NGS model with radome available	Yes
Shock rating	MILSTD-810-F to survive a 2 m (6.56 ft) drop onto concrete
Vibration rating	MIL-STD-810-F on each axis
Humidity	100% humidity proof, fully sealed
Temperature	
Operating	–40 °C to 70 °C (–40 °F to 158 °F)
Storage	–40 °C to 70 °C (–40 °F to 158 °F)
Mounting thread	5/8"–11 Female

Example of a GPS receiver choke ring / resistive plane active antenna: TRIMBLE Geodetic

- ***Emphasis on phase-center accuracy, but no antenna gain pattern information***

Approaches to Generate the Receiver Antenna Mask

Technical Specification	
Leica AR25	
Design	Dorne-Margolin antenna element with 3D choke ring ground plane
Signals tracked	GPS: L1, L2, L2c, L5 GLONASS: L1, L2, L3 Galileo: E2-L1-E1, E5a, E5b, E6, AltBOC Compass: B1, B2, B3, L5 L-Band (incl. SBAS, OmniSTAR and CDGPS)
Dimensions	380 mm x 200 mm
Weight	7.6 kg
Connector	N-Type with TNC adapter supplied
Supply Voltage	3.3 –12 VDC
Nominal Impedance	50 ohms
Gain	typically 40 dBi
Noise Figure	0.5 – 1.2 dBi
Temperature, operating	–55° C to +85° C
Temperature, storage	–55° C to +90° C
Environmental Protection	Humidity: up to 100% Rain, dust, sand, wind: IP67 – Protection against blowing rain and dust. Waterproof to temporary submersion into water (1m)
Accessories	Weatherproof radome available
Antenna Cables	Are available in lengths of 1.2/2.8/10/30/50/70 metres. Longer cables available on request

Example of a GPS receiver choke ring active antenna: LEICA AR25

- ***No antenna gain pattern information***
- ***Units for 'Gain' and 'Noise Figure' indicate that the shown gain is preamp gain***

Request for Receiver Antenna Data

- *ANTENNA GAIN PATTERN DATA FROM MANUFACTURERS*

  - ***Directivity Pattern***
    Preferably we would like more than one elevation cuts (XZ and YZ) to determine whether the omni-directional assumption is reasonable

  - ***Reference Gain at Zenith***

  - ***Vertical Polarization OR Conversion from Circular to Vertical Polarization***

Request for Receiver Antenna Data

- *ANTENNA PREAMP DATA FOR ACTIVE ANTENNAS*
  - ***Receiver Make/Models Using Active Antenna***
  - ***Noise Figure***
  - ***Filtering Characteristics***
  - ***1-dB Compression Point***
  - ***RF Architecture***

Next Steps

- *DATA COLLECTION*
  - ***Data from Manufacturers***

    Allow four months to collect responses → deadline January 2015

    As is the case for the Receiver data, We plan to provide a condensed list for the antenna data needed for the analysis.

  - ***Data from Public Sources***

- *WG CONSENSUS REGARDING ANTENNA GAIN PATTERNS*
  - ***Ideally a gain pattern per antenna make/model*** For the case of standalone antennas, and a gain pattern per receiver make/model for the case of integrated antennas is desired to facilitate the agreement on a pattern per category through the Adjacent Band WG.
  - ***Number of Model Patterns for Various Categories :*** At a minimum, we need one model for the gain pattern of the smaller low-gain antennas for GLN category and another model for the larger high-gain antennas for HPR category
  - ***Agreement for the Model Gain Pattern of Each Category*** For each antenna category, a model of the Gain Pattern must be generated and agreed upon. This process can be helped by sensitivity analysis of the interference calculation.