Connected Vehicle Impacts on Transportation Planning

Technical Memorandum #5: Case Studies

www.its.dot.gov/index.htm
December 2015
FHWA-JPO-16-281

U.S. Department of Transportation

Notice

Quality Assurance Statement

Technical Report Documentation Page

1. Report No.	2. Government Accession No.	3. Recipient's Catalog No.
FHWA-JPO-16-281		

4. Title and Subtitle	5. Report Date
Connected Vehicle Impacts on Transportation Planning: *Technical Memorandum #5: Case Studies*	December 2015
	6. Performing Organization Code
7. Author(s) Daniel Krechmer, May Gin Cheung, Jason Hyde, James Osborne, Mark Jensen, Erin Flanigan	**8. Performing Organization Report No.**
9. Performing Organization Name And Address Cambridge Systematics, Inc. 4800 Hampden Lane, Suite 800 Bethesda, MD 20814	**10. Work Unit No. (TRAIS)**
	11. Contract or Grant No. DTFH61-12-D-00042
12. Sponsoring Agency Name and Address U.S. Department of Transportation ITS Joint Program Office-HOIT 1200 New Jersey Avenue, SE Washington, DC 20590	**13. Type of Report and Period Covered** Technical Memorandum February 2015 to December 2015
	14. Sponsoring Agency Code HOP

15. Supplementary Notes

16. Abstract

The principal objective of this project, "Connected Vehicle Impacts on Transportation Planning," is to comprehensively assess how connected vehicles should be considered across the range of transportation planning processes and products developed by States, Metropolitan Planning Organizations (MPO), and local agencies throughout the country. This report summarizes the results of one of the key tasks, development of illustrative scenarios of C/AV planning, based on real-world planning environments, that highlight the various ways that C/AVs can be addressed in planning processes and products. The first section includes a comprehensive overview of C/AV technology and deployment, followed by C/AV case studies. While the impact of C/AV on each of the planning products will differ, the fundamental technical and policy aspects are the same.

Case studies included are: 1) Transportation Improvement Program; 2) Regional ITS Architecture; 3) Bicycle and Pedestrian Plan; 4) Long-Range Metropolitan Transportation Plan; 5) Asset Management Plan; 6) Strategic Highway Safety Plan; 7) State Implementation Plan; 8) Transit Development Plan; 9) Public Involvement Plan; 10) Freight Plan; and 11) Financial Plan.

Each case study includes an overview of the planning product and explores potential impacts of C/AV on the planning product, the process used to develop it, and related tools and techniques. In addition, a sample C/AV project is presented for nine of the case studies. The Public Involvement Plan (case study #9) and the Financial Plan (case study #11) do not include specific project examples, since development of the plan itself is the only activity.

17. Key Words	18. Distribution Statement
Connected vehicles, automated vehicles, transportation planning products and processes	No restrictions

19. Security Classif. (of this report)	20. Security Classif. (of this page)	21. No. of Pages	22. Price
Unclassified	Unclassified	91	N/A

Form DOT F 1700.7 (8-72) **Reproduction of completed page authorized**

SI* (MODERN METRIC) CONVERSION FACTORS

APPROXIMATE CONVERSIONS TO SI UNITS				
SYMBOL	**WHEN YOU KNOW**	**MULTIPLY BY**	**TO FIND**	**SYMBOL**
		LENGTH		
in	inches	25.4	millimeters	mm
ft	feet	0.305	meters	m
yd	yards	0.914	meters	m
mi	miles	1.61	kilometers	km
		AREA		
in^2	square inches	645.2	square millimeters	mm^2
ft^2	square feet	0.093	square meters	m^2
yd^2	square yard	0.836	square meters	m^2
ac	acres	0.405	hectares	ha
mi^2	square miles	2.59	square kilometers	km^2
		VOLUME		
fl oz	fluid ounces	29.57	milliliters	mL
gal	gallons	3.785	liters	L
ft^3	cubic feet	0.028	cubic meters	m^3
yd^3	cubic yards	0.765	cubic meters	m^3
	NOTE: volumes greater than 1000 L shall be shown in m^3			
		MASS		
oz	ounces	28.35	grams	g
lb	pounds	0.454	kilograms	kg
T	short tons (2000 lb)	0.907	megagrams (or "metric ton")	Mg (or "t")
		TEMPERATURE (exact degrees)		
ºF	Fahrenheit	5 (F-32)/9 or (F-32)/1.8	Celsius	ºC
		ILLUMINATION		
fc	foot-candles	10.76	lux	lx
fl	foot-Lamberts	3.426	candela/m^2	cd/m^2
		FORCE and PRESSURE or STRESS		
lbf	poundforce	4.45	newtons	N
lbf/in^2	poundforce per square inch	6.89	kilopascals	kPa

APPROXIMATE CONVERSIONS FROM SI UNITS				
SYMBOL	**WHEN YOU KNOW**	**MULTIPLY BY**	**TO FIND**	**SYMBOL**
		LENGTH		
mm	millimeters	0.039	inches	in
m	meters	3.28	feet	ft
m	meters	1.09	yards	yd
km	kilometers	0.621	miles	mi
		AREA		
mm^2	square millimeters	0.0016	square inches	in^2
m^2	square meters	10.764	square feet	ft^2
m^2	square meters	1.195	square yards	yd^2
ha	hectares	2.47	acres	ac
km^2	square kilometers	0.386	square miles	mi^2
		VOLUME		
mL	milliliters	0.034	fluid ounces	fl oz
L	liters	0.264	gallons	gal
m^3	cubic meters	35.314	cubic feet	ft^3
m^3	cubic meters	1.307	cubic yards	yd^3
		MASS		
g	grams	0.035	ounces	oz
kg	kilograms	2.202	pounds	lb
Mg (or "t")	megagrams (or "metric ton")	1.103	short tons (2000 lb)	T
		TEMPERATURE (exact degrees)		
ºC	Celsius	1.8C+32	Fahrenheit	ºF
		ILLUMINATION		
lx	lux	0.0929	foot-candles	fc
cd/m^2	candela/m^2	0.2919	foot-Lamberts	fl
		FORCE and PRESSURE or STRESS		
N	newtons	0.225	poundforce	lbf
kPa	kilopascals	0.145	poundforce per square inch	lbf/in^2

Table of Contents

List of Tables

List of Figures

1.0 Introduction

The principal objective of this project, "Connected Vehicle Impacts on Transportation Planning," is to comprehensively assess how connected vehicles should be considered across the range of transportation planning processes and products developed by States, Metropolitan Planning Organizations (MPO), and local agencies throughout the country.

While the focus is primarily on connected vehicle (CV) technology, it is clear that, to incorporate the full range of planning products and activities, automated vehicle (AV) technology should be considered as well; thus, the subject of this effort is referred to as connected-automated vehicle (C/AV) technology in the document. Background information regarding both types of technologies is provided later in this report.

To fulfill the objectives of this project, the U.S. Department of Transportation (U.S. DOT) has identified four types of analyses to be undertaken:

1. Identifying how C/AV technology should be considered in transportation planning processes and products under a variety of circumstances (Task 2);
2. Identifying new or enhanced tools, techniques, and data to support various C/AV planning activities and approaches for how to develop them (Task 3);
3. Developing a number of illustrative scenarios of C/AV planning, based on real-world planning environments, that highlight the various ways that C/AVs can be addressed in planning processes and products (Task 4); and
4. Identifying the roles and responsibilities of stakeholders and organizational and workforce skills, expertise, and capabilities needed to carry out C/AV planning (Task 5).

The results of these tasks will be summarized in a final report that will document the findings of the project and actions that planning agencies can take to address C/AV impacts. In addition, related materials will be prepared in support of public outreach efforts by U.S. DOT and other organizations.

1.1 Illustrative Connected Vehicle Planning Case Studies

This report is the second of two reports to be prepared under Task 4. The overall research objective of Task 4 is as follows:

- Select and refine 11 case studies from a larger list defined in Technical Memorandum #2. The case studies should represent the broad spectrum of planning products developed by States, MPOs, and local agencies and should illustrate the potential impacts of C/AV technologies on the planning process and related activities.
- Create a framework to analyze case studies. Each case study will include an overview of a specific transportation plan/program, explore potential impacts of C/AV on the planning process and related activities, and present an example C/AV project that might be included within that product.

- Provide a comprehensive overview of technical and policy details of C/AV for planners of various knowledge levels. Topics include C/AV technology, infrastructure, potential benefits, planning tools, and financial considerations.
- Discuss how C/AV can be incorporated into planning and programming functions in the short and medium to long term, roles and responsibilities of stakeholders and existing U.S. DOT planning guidance and tools that can provide support.
- Discuss how C/AV technology can support the reporting requirements imposed by the Moving Ahead for Progress in the 21st Century Act (MAP-21).

This report (Technical Memorandum #5) analyzes the 11 selected case studies, building on the framework for the first case study analyzed in Technical Memorandum #4.

1.2 Resources

The U.S. DOT ITS Joint Program Office (JPO) Web site on ITS research is the main resource for planners to learn about and stay up to date on C/AV topics. Planners can sign up for the email newsletter and get news updates on policy, technology, and pilot progress, along with notice of upcoming guidance documents and webinars. Furthermore, the site serves as a repository of other resources and links—most of the resources cited in this report also can be found on the Web site. Technical Memorandum #2 (section 5.0) contains best practices and recommendation from stakeholders (State DOTs, MPOs, and academia), including how the planning community is developing knowledge of C/AV technology.

The American Association of State Highway and Transportation Officials (AASHTO) and U.S. DOT are collaborating on efforts to identify and define a vehicle-to-infrastructure (V2I) program and provide guidelines to States, MPOs, and local agencies for implementation. One of the more important document referenced throughout this report is the *National Connected Vehicle Field Infrastructure Footprint Analysis*, developed by AASHTO, with support by U.S. DOT and Transport Canada. The Footprint describes the value of current research about connected vehicle deployments, along with applications analysis, deployment concepts, and a preliminary cost estimation.

Additional resources are cited throughout this report and in appendix B. Technical Memorandum #2 provides a review of connected vehicle literature, including a list of guidance documents.

1.3 Framework to Analyze C/AV Case Studies

Planners should have a working knowledge of C/AV in order to find the C/AV case study analysis useful. Section 2.0 through 4.0 provides this information and should be read before reviewing the case studies. However, as this information is constantly evolving, planners should utilize the resources provided throughout the report to continue to develop and update their knowledge.

The overall framework is a comprehensive overview of C/AV technology and deployment, followed by C/AV case studies. While the impact of C/AV on each of the planning products will differ, the fundamental technical and policy aspects are the same. C/AV topics specifically related to individual planning products will be discussed within each case study, as needed.

The remainder of this report is organized as follows:

- Section 2.0 introduces the connected vehicle environment, providing an overview of C/AV technology and potential benefits.
- Section 3.0 discusses connected vehicle deployment, including estimated timeframes, stakeholder roles, preliminary cost estimation, and potential challenges and limitations.
- Section 4.0 provides a summary of current intelligent transportation system (ITS) technologies and the potential role of C/AV in supplementing or replacing these existing technologies.
- Section 5.0 contains the 11 C/AV case studies developed for the project:
    1. Transportation Improvement Program.
    2. Regional ITS Architecture.
    3. Bicycle and Pedestrian Plan.
    4. Long-Range Metropolitan Transportation Plan.
    5. Asset Management Plan.
    6. Strategic Highway Safety Plan.
    7. State Implementation Plan.
    8. Transit Development Plan.
    9. Public Involvement Plan.
    10. Freight Plan.
    11. Financial Plan.

Each case study includes an overview of the planning product and explores potential impacts of C/AV on the planning product, the process used to develop it, and related tools and techniques. In addition, a sample C/AV project is presented for nine of the case studies. The Public Involvement Plan (case study #9) and the Financial Plan (case study #11) do not include specific project examples, since development of the plan itself is the only activity.

2.0 The Connected Vehicle Environment

This section provides the background and context of C/AV technology. It will first describe the elements of the CV environment and their interactions and then present the motivation for and potential benefits of deployment. The reader to should reference pages 16-37 of the AASHTO Footprint Analysis for more explanation of the CV environment. Additional sources are cited as needed.

2.1 Background

A CV environment enables wireless communications among vehicles (vehicle-to-vehicle, or V2V), infrastructure (vehicle-to-infrastructure, or V2I), and mobile devices. Vehicles include light vehicles, trucks, and transit vehicles. Pedestrians, bicyclists, or motorcyclists can carry mobile devices, allowing vehicles and infrastructure to communicate with other CV participants and vice versa. The information shared through these communications may include the following:

- Presence, speed, location, and direction of travel;
- Road and traffic conditions; and
- On-board vehicle data, such as emissions, braking, and windshield wiper activation. (The availability of on-board vehicle data for planning purposes is subject to privacy and legal agreements that have not yet been established.)

Connected vehicle communications types include Dedicated Short-Range Communications (DSRC), cellular, and Wi-Fi.

- DSRC operates over the 75 megahertz (MHz) of spectrum in the 5.9 gigahertz (GHz) band, allocated for transportation safety purposes by the Federal Communications Commission (FCC) in 1999. This dedicated network provides a low-latency, short- to medium-range wireless communications medium that permits very fast and reliable data transmissions critical for safety applications.
- Cellular technology uses fourth-generation (4G) and third-generation (3G) mobile networks provided by private carriers such as Verizon and AT&T. The speed, quality, and wireless range depend on a variety of factors, including distance to cellular towers and volume of communications traffic. Cellular communications currently do not consistently provide the low latency required for critical safety applications, but this medium can carry longer-range communications for transfer of data that support some mobility and environmental applications, along with supporting agency data. (Agency data refers to information disseminated/collected by transportation agencies such as traffic and pavement data.)
- Wi-Fi communications are typically short range and are not as reliable as DSRC for communications with moving vehicles. Wi-Fi can carry large data transfers in areas where vehicles may be stationary for extended periods of time.

2.2 Infrastructure and Equipment

The DSRC environment consists of mobile elements, field infrastructure, and center terminals that engage in multipath, real-time communications.

- Mobile elements include vehicle on-board units (OBU) and mobile devices. OBUs are either from embedded or aftermarket and communicate via DSRC. Mobile devices are smartphones communicating on cellular and Wi-Fi networks. There also are portable DSRC radios and DSRC-enabled smartphones in development.
- Field infrastructure includes roadside units (RSU) deployed along corridors and intersections. RSUs exchange data with and send warnings to vehicle OBUs and DSRC-enabled devices via DSRC. They also may interface with local infrastructure such as signal controllers, roadside sensors, and dynamic message signs (DMS). Communication with back-office facilities such as traffic management centers (TMC) will typically occur through backhaul (fiber optic) or cellular links.
- Center terminals are back-office facilities that collect, store, and process the raw data generated by vehicles and the roadside system. The data are converted into information and distributed through in-vehicle systems over the DSRC network, mobile devices over the cellular-based legacy traveler information systems such as 511, and DMSs.

Data will originate from mobile elements and pass through field infrastructure to be processed at center terminals. Alternatively, data originating from mobile elements can directly travel to center terminals. Data originating from field infrastructure and center terminals will be accessed and used by travelers and vehicles to inform travel decisions. The communication logic is summarized in figure 2.1.

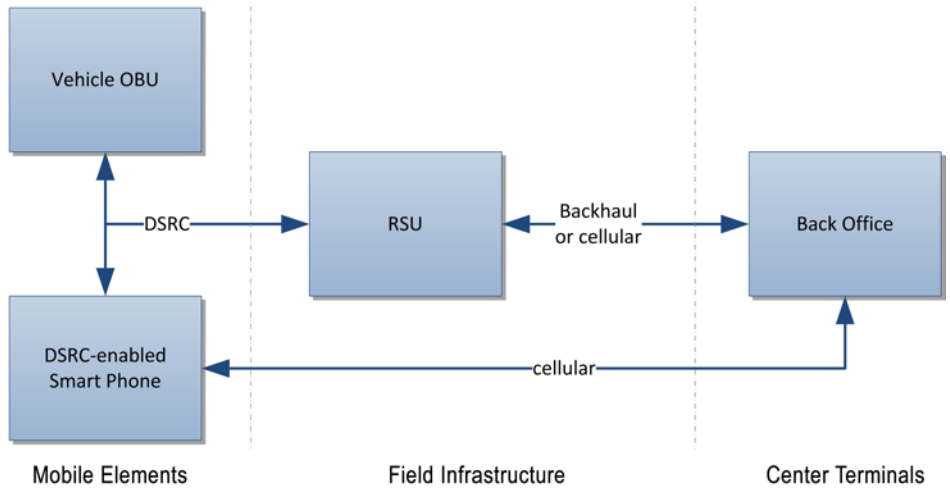

Figure 2.1 Flowchart. Simplified Communication Logic
(Source: U.S. DOT 2015)

2.3 Automated Vehicles

AVs are those in which at least some aspect of a safety-critical control function (e.g., steering, throttle, or braking) occurs without direct driver input. Advances in AV technologies are expected to occur in parallel with these advances in CV technology. Although it is expected that both CV and AV technologies will provide the vehicle and the driver with a greater awareness of their surroundings, they are fundamentally different in that AVs, unlike CVs, rely on on-board sensors to collect information about the vehicle's surroundings and to operate the vehicle. While AV technology can be implemented without the ability to communicate with other vehicles or roadway infrastructure, higher levels of automation will likely need CV technology to achieve their full potential. Thus, when discussing connected-automated vehicles, C/AVs, this report refers to automated functions that fuse the data from on-board sensors with the data stream from CV technologies.

AV technology, with its access to vehicle control functions, will be strictly controlled by vehicle manufacturers rather than by public agencies and DOTs; however, public agencies will provide a regulatory or supervisory role regarding the operations of AVs on public roads (e.g., licensing, insurance requirements, and permitted conditions for testing). While AV deployment may occur without significant involvement by the public sector, vehicle manufacturers are working towards a convergent solution, with CV systems playing an important role in enabling AVs.

While a transportation system consisting primarily of highly automated vehicles may be decades away, partially automated solutions assisted by V2V and V2I applications will be available sooner. For example, CVs share their locations and speeds, allowing for vehicle platooning. Vehicles can travel in synchronization with closer headways, increasing road capacity and reducing energy consumption. At the same time, V2I systems can provide information about real-time traffic conditions, queue warnings, and Signal Phase and Timing (SPaT) to allow for proactive responses by AVs.

2.4 Potential Benefits

C/AV technologies have the potential to provide a broad range of benefits to the transportation system and its users, whether they be drivers, passengers, pedestrians, or bicyclists. There are four main categories of C/AV benefits:

1. **Safety.** The injuries and fatalities of both vehicle occupants and vulnerable road users will be reduced and mitigated. Users share information such as speed, location, and direction or travel information, allowing drivers/vehicles to take preemptive actions to avoid and/or mitigate crashes.
2. **Mobility.** The information about travel conditions and options for both system users and operators will be increased and improved. Users can make decisions in real time and operators can manage road network performance in real time.
3. **Environment.** The impact of vehicle travel will be reduced by promoting greener transportation choices and driver/vehicle behavior. Vehicles can communicate with infrastructure to enhance fuel efficiency by avoiding unnecessary stops or excessive idling.
4. **Data.** There will be new cost effective data sources and collection methods introduce that will improve asset management, network operations, just-in-time maintenance, and incident response, among other functions.

The development of C/AV and its benefits currently is focused on light vehicles, freight, and transit, with limited applications under development for motorcyclists, bicyclists, and pedestrians. The safety and mobility of those not participating in the CV environment should be considered in planning and deployment activities. For example, the private sector has tested C/AV safety applications with after-market modifications to smartphones, but it is not possible to estimate how many users will adopt this technology until more information is available regarding cost and impact on performance. Safety applications should then be considered as an additional safety measure, not a replacement for current safety measures. Safe crossing of an intersection should be ensured by the local infrastructure and not rely on external technology.

Potential Applications

This report focuses on V2I applications that are practical for agencies to deploy in the short and scale over the medium to long term. In the short term, the market penetration of connected vehicles will be limited. Furthermore, as discussed in section 2.3, the short-term availability of automated capabilities will also be limited. As a result, short-term benefits will most likely be realized from V2I applications that provide driver alerts. In the medium to long term, as market penetration grows and automated capabilities are expanded, V2V applications and AV responses will become more practical. While the benefits delivered by CV infrastructure are greater with both V2V and V2I applications in place, the development of V2V and V2I applications can occur independently. However, the impacts of V2V applications and higher levels of automation are still analyzed in the case studies.

The rest of this section describes short-term (0 to 5 years), medium-term (5 to 20 years) and long-term (20+ years) benefits under each category, along with a summary of some applications that can deployed in the short term. In this report, the timeframes are defined as follows:

- The short term will focus on pilot deployments, other demonstration projects and early technology adopters;
- The medium term will introduce CV-equipped vehicles with increasingly automated functions, to the market and transition pilot deployments to field operations. It is likely that during this phase, Connected and Automated technologies will become linked together.
- The long term will result in the market maturity of CV-equipped vehicles with fully automated capabilities and field maturity of CV-enabled infrastructure.

These defined timeframes are established solely for the purposes of evaluating impacts on planning and are linked to the estimated deployment timeline discussed section 3.0. The applications are summarized from the U.S. DOT CV Web site, where more detailed descriptions and Concept of Operations can be accessed.

Safety

Short Term: Drivers will be provided with warnings based on information regarding relatively static conditions such as SPaT, work zones, and sharp curves. Examples of short-term applications include the following:

- **Red Light Violation Warning (RLVW).** SPaT information from a signal controller, along with vehicle position and speed, is used to determine if a warning to the driver is needed.
- **Reduce Speed/Work Zone Warning (RSWZW).** Information is provided to the vehicle to enable alerts or warnings relating to the specific situation, such as warning drivers to reduce speed, change lanes, or come to a stop within or approaching work zones.

- **Pedestrian in Signalized Crosswalk (PSCW).** An application that warns vehicles of a potential conflict with pedestrians that are within the crosswalk of signalized intersection.
- **Curve Speed Warning (CSW).** Geometric information is provided to the vehicle to enable a warning that the speed of the vehicle is too high to safely negotiate the curve.

C/AV applications are expected to offer some of the most promising opportunities for crash reduction. Research conducted by the National Transportation Systems Center for the National Highway Traffic Safety Administration (NHTSA) estimates that V2I and V2I system can potentially address up to 81 percent of vehicle crashes.

Longer Term: In addition to providing warnings, vehicle-based applications may determine if automated braking or steering is required.

Mobility

Short Term: Benefits include increased operating efficiency for transit/truck vehicles and access to more accurate traffic information for system users. Examples of short-term applications include the following:

- **Emergency Vehicle Preemption (PREEMPT).** Traffic signal controllers detect oncoming emergency vehicles and change desired direction to green.
- **Transit Signal Priority (TSP).** Transit vehicles request an extended green from traffic signals.
- **Freight-specific Dynamic Planning and Performance (FSDPP).** Applications provide enhanced freight-related travel information, such as wait times at ports, road closures, work zones, and route restrictions.
- **Mobile Accessible Pedestrian Signal System (PED-SIG).** An application that allows for an automated call from the smartphone of a visually impaired pedestrian to the traffic signal, as well as audio cues to safety navigate the cross.

Longer Term: Vehicles traveling at closer headways can increase operating capacity, and the availability of real-time traffic data allows for active traffic management by system operators.

Environment

Short Term: Applications provide drivers with signal timing information to promote eco-friendly behavior. Short-term applications include the following:

- **Eco-Approach and Departure at Signalized Intersections (EADSI).** SPaT information is used to provide speed advice, allowing the driver to adapt in order to pass the next signal on green or to decelerate to a stop in the most eco-friendly manner.

Longer Term: Sufficient environmental data allows for larger portions of the system to be optimized and made more eco-friendly.

Agency Data (All applications in the other category have a data component. This agency data category captures applications primarily focus on improve data collection and may have secondary impacts on safety, mobility, or environment categories.)

Short Term: New data sources and collection methods will supplement current sources and methods. Short-term applications include the following:

- **Probe-based Pavement Maintenance (PBPM).** This technology detects vertical wheel movement and/or body acceleration to measure road quality, such as pothole location and size and surface roughness.

Longer Term: New data sources and collection methods can allow agencies to reduce or phase out more expensive traffic monitoring methods such as loop detectors and cameras.

3.0 Connected Vehicle Deployment

The previous section discussed the “what” and “why” of the CV environment, describing the technology, its interactions, and potential benefits of deployment. The section provides the details of the “when,” “who,” and “how,” identifying the estimated timeline to a mature CV environment, the key stakeholders involved, and methods of deployment planning, including resource estimation and challenges.

3.1 Current Research and Estimated Timeline

The reader should refer to pages 73-96 of the AASHTO Footprint Analysis for more discussion on an estimate timeline to national deployment.

ITS Deployment and 511 Program

The deployment of previous ITS systems may provide some insight into the approach that will be taken by the agencies responsible for deploying the field infrastructure components of the connected vehicle environment. For example, the national infrastructure deployment of 511 traveler information program, while much more limited in scope than the connected vehicle program, provides certain useful parallels. In July 2000, after U.S. DOT submitted a formal petition, the FCC designated “511” as the nationwide traffic information telephone number. This ruling left nearly all implementation issues and schedules to States, MPOs, local agencies, and telecommunications carriers. There are no Federal requirements or nationally designated funding sources for 511 implementation.

Two principal efforts were undertaken to encourage a nationwide 511 deployment. First, AASHTO established a 511 Deployment Coalition to facilitate information sharing and dialogue. Second, a 511 Program Support Assistance Program provided grants in amounts of up to $100,000 for public agencies to develop implementation plans. Deployment began with early that had existing telephone-based traveler information service infrastructure, with subsequent deployments apparently strongly influenced by assistance grants and participation in the Deployment Coalition.

National Connected Vehicle Footprint

The rollout of national CV infrastructure and the roles played by stakeholders could follow a template similar to that of the 511 program. AASHTO has established a V2I Deployment Coalition to begin discussion and information sharing on CV field infrastructure deployment by States, MPOs, and local agencies. Furthermore, U.S. DOT is sponsoring the CV Pilots Deployment Program, which has recently awarded three locations (New York City, Tampa, and Wyoming) to pilot connected vehicle technologies in the field and provide insight into the real-world outcomes. More details on the pilot program and ongoing progress can be found on the U.S. DOT CV Pilots Web site.

Deployment of connected vehicle infrastructure to date has occurred in test beds built in several States through the cooperation of Federal, State, and local agencies and vehicle and equipment manufacturers. These test beds serve as prototypes for larger-scale infrastructure deployments and

provide some basis for the cost estimation describe later in this report. There currently are seven active U.S. test beds, with each test bed implementing a set of CV technologies configured to particular test objectives and applications. More details on the test beds and ongoing progress can be found on the U.S. DOT CV Test Bed Web site.

These State and local agencies are likely to be among the first to deploy and operate V2I and applications. As technologies and applications mature, agencies could move directly to operational deployments. This pattern would closely resemble the rollout of ITS and 511 technologies as they move from the lead States into national deployment. Both in-vehicle devices and mobile devices used in these deployments will be provided primarily by the private sector, with their rate of adoption subject to market forces. It is therefore essential that planners stay aware of developments in both the private and public sectors.

In October 2014, AASHTO kicked off the near-term V2I Transition Phasing and Analysis project. The purpose of the project is to understand the initial, near-term (first five years) V2I investments and decisions that States, MPOs, and local agencies can make to facilitate a transition to CV operations. Building on the AASHTO Footprint Analysis, the project will do the following:

- Develop a process and tool for prioritizing V2I application deployments;
- Develop a process and tool for phasing V2I deployments;
- Develop cost-benefit tool for V2I components; and
- Develop scenarios that represent various V2I deployments.

Another important resource under development is the 2016 Federal Highway Administration (FHWA) V2I Deployment Guidance. The guidance is intended to assist agencies deploying V2I technology in meeting Federal-aid highway program requirements and ensuring interoperability and efficient and effective planning/procurement/operations. It will describe how to implement CV infrastructure and supporting systems, presenting best practices and toolkits.

Deployment Milestones

The following is a list of projected policies and developments impacting C/AV deployment:

- NHTSA released an advance notice of proposed rulemaking in August 2014 that requires DSRC capability as a standard for light vehicles manufacturers. NHTSA has stated that a similar V2V mandate may be extended to heavy vehicles. NHTSA intends to complete the light vehicle proposal in 2016.
- General Motors plans to launch in 2017 one car model equipped with V2V technology and another with expanded automated capabilities.
- Federal Communications Commission (FCC) released an advance notice of proposed rulemaking in February 2013 regarding the potential sharing of unlicensed bands in the 5.9 GHz band, including portions originally allocated to DSRC. Given concerns that unlicensed devices may cause interference with DSRC signals, the U.S. DOT, the Federal Communications Commission (FCC) and the National Telecommunications and Information Administration (NTIA) are conducting a joint test to analyze whether connected-vehicle and Wi-Fi applications are able to share the spectrum. The results are expected in 2017.
- As previously mentioned, FHWA will develop V2I Deployment Guidance describing how to implement infrastructure and supporting systems, including best practices and toolkits.

Based on these activities, figure 3.1 presents the current estimated deployment timeline for achieving a mature CV environment.

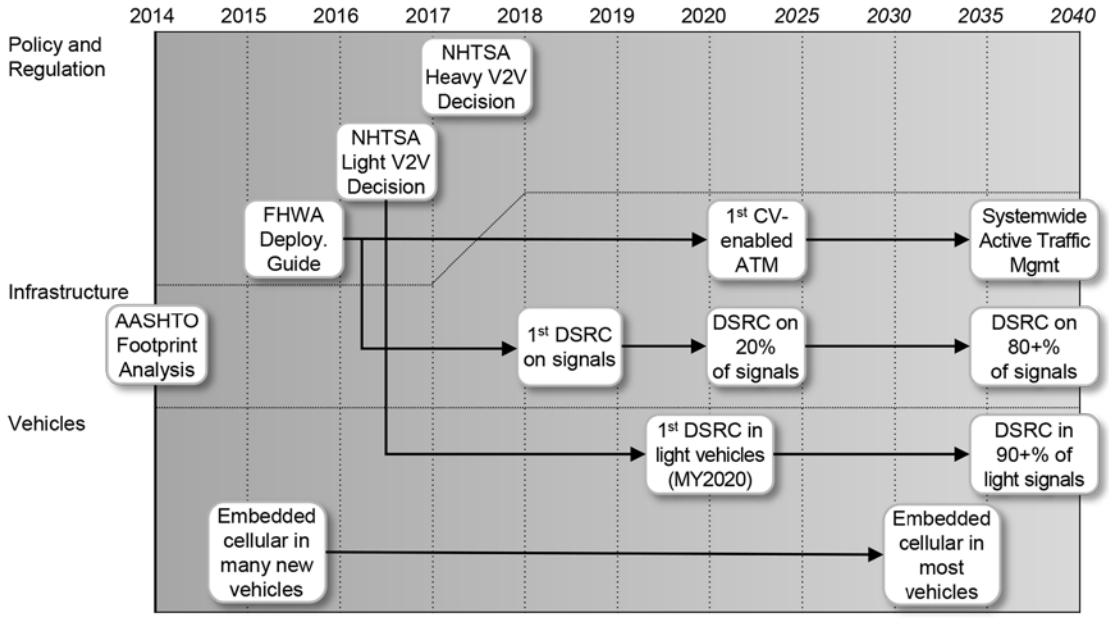

Figure 3.1 Timeline. Estimated Connected Vehicle Infrastructure Deployment Milestones
(Source: AASHTO Footprint Analysis 2014)

Based on current information regarding when DSRC for light vehicles will be mandated by NHTSA, it is estimated that light vehicle manufacturers will have developed DSRC capability for 2020 car models. Deployment of DSRC RSU at traffic signals is estimated to start in 2018/2019. Market penetration will develop gradually over 25 years, maturing in 2040 to include 80 percent of traffic signals and 90 percent of light vehicles. As part of NHTSA's proposed rulemaking, the report on V2V technology readiness includes market penetration models. Note that the lack of dedicated funding sources makes the estimate for signal deployments, and infrastructure in general, much less certain than that for vehicle deployments (assuming that the DSRC mandate is implemented).

The trend of embedded cellular in new vehicle models will continue, with cellular units available in most vehicles before 2040. Access to accurate real-time localized information will grow in parallel, allowing for next-generation active traffic management systems.

3.2 Agency Impacts

The reader should refer to pages 115-118 of the AASHTO Footprint Analysis for more discussion on potential agency impacts.

Steps to Deployment

Deploying CV infrastructure is similar to any other transportation infrastructure and is generally an extension of existing ITS practices. The first step is to identify the needs and appropriate deployment opportunities. During this needs identification stage, it is important to develop institutional awareness and support for local and regional deployments. Depending on the application(s) considered, it may

be appropriate to deploy a local demonstration pilot project. When an agency decides to deploy, that intent becomes part of the agency's planning process. CV deployments will track closely with an agency's ITS deployment practices. However, one difference is the need for agencies to pay close attention to planning for external factors. For example, given the cooperative nature of the CV environment that require connected vehicles and smartphone to participate, the market penetration of these technologies are will directly impact the effectiveness of infrastructure deployment. See section 3.4 for more discussion on these challenges.

Data Needs

States, MPOs, and local agencies involved in deployment should consider how to develop both the physical capacity to store data and the staff capacity to analyze the data. Physical capacity includes computer hardware as well as office space. Staff capacity refers to both the number of personnel and the enhanced technical skills they should possess. Given agencies' greater responsibilities related to data collection, data certification, and RSU maintenance (among others), it is clear that organizations should significantly increase their capacities.

It is unclear whether this assistance will come in the form of new staff with new skills or in the form of private partnerships and contract agreements with the private sector. Ultimately, however, it is public agencies that should manage public infrastructure and spaces. Regardless of the source of additional staff capacity, a new mix of technical and professional expertise will be required to deliver on the promised benefits of public safety, personal mobility, congestion management, and consumer value. Some of these skills will be needed by operating agencies or contractors that install, monitor, and maintain equipment. While planners may not be directly involved in these activities, they will need some familiarity with the requirements and costs in order to develop plans and funding strategies. In any event, they will need to call upon new skills in the areas of data management and analysis.

Funding Strategies

While it is not likely, at least in the short term, that there will be congressionally designated funding to support the deployment of centrally coordinated nationwide infrastructure rollout, V2I field infrastructure deployment and associated operations and maintenance (O&M) costs will have broad eligibility under various Federal-aid funding programs in the same manner as ITS field infrastructure. The same processes for identifying funding sources and allocating funding that involve States, MPOs, and local agencies will be adopted.

In parallel with the development of the 2015 FHWA Deployment Guidance, AASHTO could encourage the creation of an incentive program (similar to the 511 planning and deployment assistance program) that would provide grants to deploying agencies.

Another source of support may be public/private partnerships, including relationships with data service providers and commercial application developers. State agencies may be able to charge for private use arrangements, which are subject to 23 U.S.C. 156. Private-sector secondary use must be in the public interest, must not interfere with primary safety and mobility applications, and must allow road users to decide whether to make their data available. The 2015 FHWA Deployment Guidance will include a discussion on "private secondary use" of rights-of-way.

3.3 Deployment Cost Estimation

The reader should refer to pages 97-114 of the AASHTO Footprint Analysis for more explanation on deployment cost estimation. This section provides a high-level overview of the costs of various CV deployment components. As discussed in section 3.1, a cost-benefit tool will be developed as part of AASHTO Near-Term V2I Transition Phasing and Analysis.

CV infrastructure deployment has been limited to date; as a result, there are very few data points to use in developing deployment cost estimates. As demand for CV infrastructure and equipment increases and mass production begins, deployment costs are expected to decrease over the medium to long term.

The U.S. DOT has created a high-level cost estimation tool for the CV Pilots Deployment Program, the Cost Overview for Planning Ideas and Logical Organization (COPILOT). COPILOT provides a spreadsheet of preliminary cost estimates based on the AASHTO Footprint Analysis, opinions provided by subject matter experts, vendor quotes, and other online sources. From COPILOT, table 3.1 summarizes some of the most important capital costs that will be used in the example projects described in section 5.0.

As market penetration of DSRC increases and economies of scale are applied to the production of these devices, unit prices could fall significantly. Larger markets also may provide incentives for technological innovation that could drive costs down even further.

The following is a brief overview of the components in table 3.1:

- DSRC RSU communicates with vehicles via OBU and DSRC-enabled smartphones. Associated costs include those for hardware, planning and design, and installation labor.
- Backhaul communication establishes connectivity to back-end servers and transportation management centers. Associated costs include those for hardware, planning and design, and bandwidth allocation.
- Signal controllers interface with DSRC RSU to provide SPaT and roadside geometry. Associated costs include those for hardware and installation.
- Light vehicle OBU is an aftermarket device that can run applications, transmit and receive DSRC messages, and issue alerts to drivers.
- Transit/Truck Retrofit kit and OBU is an aftermarket device similar to the light vehicle OBU, but it also connects to the vehicle system (e.g., sensors) and has a graphic interface.

Table 3.1 June 2014 Preliminary Estimate of Deployment Costs per Unit

Deployment Component	Minimum	Maximum	Average Costs (weighted by deployment size (e.g., deployment with more units will have its cost weighted more))
DSRC Roadside Unit	$13,100	$21,200	$17,600
Backhaul Communication (the backhaul costs depend greatly on the existing infrastructure; which varies from integrating with existing equipment to installing a completely new backhaul)	$3,000	$40,000	$27,700
Signal Controller	–	–	$3,200
Light Vehicle OBU	–	–	$4,200
Transit/Truck Vehicle OBU	–	–	$10,000

Source: FHWA COPILOT program.

There are additional cost components about which insufficient data are available to use in the example projects. For example, there are hardware annual O&M power demands, system checks, licensing fees, and security credential updates. Other costs include system engineering, public outreach, and resources to store and analyze data.

While deploying a connected vehicle infrastructure will require financial investment, the potential benefits (discussed in section 2.0) can result in costs savings in both the short term and the medium to long term. For example, as a result of the reduction of crashes and generation of improved real-time information:

- System operators would require fewer resources to manage incidents while still improving response time, and
- System users would experience cost savings in the form of reduced congestion, either through improved system operations or avoidance of traffic jams.

3.4 Challenges and Limitations

Most of this section is summarized from Technical Memorandum #2 (section 6.0). The reader should refer to that document for more details.

Regional Coordination

Deploying the CV environment will have benefits at the local level, however, coordination at the regional and State level will enable the full potential to be realized. Furthermore, C/AV applications will likely involve a great number of transactions and stakeholders, from both the public and private sector. There will need to be clear agreement on the roles and responsibilities off various stakeholders, from the initial deployment of infrastructure and equipment to the ongoing operations and data management. Standards for data exchange may be required for agencies operating across multiple jurisdictions. At a minimum, the originators and users of the data need to agree on system interfaces and protocols. Regional coordination is discussed further in section 5.2, the regional ITS Architecture case study.

Security/Privacy

System security and privacy are critical issues for C/AV development. Safe and effective interfaces for V2I communications will be essential if these systems are to gain acceptance by the public. Most of these issues are unresolved, and some involve complicated problems relating to data ownership, data/infrastructure performance and liability, and user privacy protections. Progressive policy and new technical standards need to answer these and other important questions:

- How is data ownership treated in an environment featuring private ownership/operation of infrastructure and systems?
- How is the quality of data verified and maintained (i.e., how does a vehicle verify outside communications in either a V2I or V2V setting, and who is liable when systems fail or security is compromised)?
- Who will manage a user credentialing/certificate system to control secure access?
- How will C/AV infrastructure and data be utilized for law enforcement purposes?
- What personal information will users be willing to trade for mobility/safety benefits, and will users be offered incentives to opt in and share personal data?

At the present time, it is unclear whether a central or distributed approach would be the best way to address these and other important risks relating to security and privacy. Many of the challenges may best be addressed by private C/AV application development companies that will benefit from access to C/AV data; however, a large role for States and the Federal Government is anticipated in developing equitable policies, writing contracts, and managing private-sector contractors and service providers. While the planning community may not be directly involved in settling these issues, the ability to utilize C/AV-related information will be an important consideration. As a result, planners should track developments in the privacy/security area, understand limitations on data availability and use, and weigh in on regulatory processes as appropriate.

Market Penetration

Market penetration is an important factor in assessing the feasibility of C/AV applications and in selecting which to deploy. Even with relatively low market penetration, many V2I applications can provide opportunities for traffic and incident management by communicating real-time notifications

and warnings. In the short term, fleet vehicles (agencies vehicles, transit buses and freight trucks) may provide a valuable opportunity to deploy C/AV technology in a cost effective and comprehensive way. Fleet vehicles may allow for lower costs due to economies of scale and similar vehicle types. Furthermore, since fleet vehicles are subject to less privacy concerns, more comprehensive data can be collected. However, in order to scale V2I applications and for V2V applications to be practical to implement, higher market penetration rates will be required.

As discussed in section 3.1, NHTSA is considering a V2V mandate and General Motors has announced its own V2V initiative. It is anticipated that that public policy-makers and private manufacturers will support market penetration for the general vehicle population in a continuous, gradual manner, as private owners make individual purchases of C/AV-equipped vehicles over time. Retrofitting of older vehicles with C/AV technology are a possibility, but issues related to standards and compatibility are significant and still need to be addressed. Car sales data can be a potential resource for planners to track market penetration of C/AV-equipped vehicles. This may require paying private parties and/or coordinating with public agencies (e.g., Department of Motor Vehicles).

Technology Phasing

As C/AV technology is rapidly improving, it is important for agencies stay current with C/AV industry developments. Medium- to short-term C/AV investments should not be tied to particular technologies; rather, they should focus on developing a systems framework that allows particular technologies (control systems, sensor technologies, connectivity solutions, analytics, and others) to be phased in and out depending on their performance and their utility. Planners should prepare for more rapid technology upgrades and changes in C/AV technology. Not only must basic safety messages and other information be secure, but the security of the software and hard products that are broadcasting or receiving such information most like must be updated. The hardware placed in early deployment will likely become obsolete more quickly than other transportation infrastructure. Given this likelihood, planners should understand the phrase “planning for obsolescence.”

4.0 Current ITS and C/AV

The previous two sections provided an overview of C/AV technology and discussed deployment. Much of the anticipated rollout process, costs, and functionality are identified by comparing C/AV, an emerging ITS technology, to existing ITS technology. This section provides an overview of current ITS technology (along with a few related traffic engineering improvements) and highlights the potential roles of C/AV.

C/AV technology will potentially change the way existing ITS functions are carried out and thereby affect the development of various transportation planning products, as well as investment decisions related to transportation operations. Operational improvements and investments recently have become more integrated into the planning process, making it important for planners to understand the changes that may occur.

It is assumed that deploying agencies will seek to preserve and enhance their existing infrastructure and ITS investments. In the short term, C/AV technology will complement existing ITS capabilities. In the medium to long term, C/AV technology may come to replace equivalent existing ITS solutions. Table 4.1 identifies a subset of ITS systems that may be affected by C/AV technology and describes the various roles of that technology:

- **Complementary solution.** C/AV technology can enhance existing ITS solutions. C/AV capabilities may not provide equivalent functionality, however, so C/AV technology is not expected to replace existing ITS solutions.
- **Supplementary solution.** C/AV technology can enhance and partially replace existing ITS solutions. C/AV capabilities may provide equivalent functionality to some aspects of existing ITS solutions and may therefore be phased in to partially replace existing ITS solutions.
- **Alternative solution.** C/AV can enhance and fully replace existing ITS solutions. C/AV capabilities may provide equivalent functionality and therefore provide more cost effective alternatives to existing ITS solutions. It is anticipated C/AV can be phased in as existing ITS equipment becomes obsolete and market penetration increases, resulting in a hybrid system that can extend coverage in the short term and provide replacements over time.

As discussed in section 2.0, it is important that the safety and mobility of transportation users not participating in the CV environment are not impaired, so some C/AV solutions are listed to complement and/or supplement existing ITS solutions. For example, at intersections with actuated traffic signals, pedestrian push buttons allow pedestrians to request a walk signal in the absence of vehicles that would trigger sensors. A C/AV complement to this solution could improve the mobility of disabled/senior pedestrians by allowing them to request walk signals using a DSRC-enabled smartphone. Still, pedestrian push buttons are important mobility (and safety) tools for pedestrians not participating in the CV environment.

Table 4.1 Current ITS Solutions and the Role of C/AV

ITS Technology	Traditional/Existing Solutions	C/AV Potential
Dynamic Message Systems	Electronic signs provide real-time travel information to motorists.	**Complementary solution:** Motorists can directly receive information inside vehicle.
Travel-Time System	In-pavement or roadside-mounted point-to-point sensors read a unique signal and estimate travel time. Existing probe data systems (primarily using Bluetooth technology) provide travel-time data to both agencies and private customers.	**Alternative solution:** DSRC can, in the short term, increase the density of probe data and potentially transition to replace current methods. Benefit can be extended to motorcyclists and bicyclists. This is effective even with low market penetration.
Signal Coordination Study	Pretimed signals allow traffic to flow freely through a corridor based on a manual field survey.	**Alternative solution:** Field survey data can be automatically collected through DSRC. This requires medium to high penetration for data accuracy.
Intersection Monitoring and Detection	This technology converts signals from pretimed to actuated logic, where signals will skip approaches when sensors detect no vehicle and the pedestrian push button is not active.	**Complementary solution:** Mitigate negative impacts on motorcyclists and bicyclists who are not detected by complementing sensor data with DSRC signal data.
Adaptive Traffic Signal Technologies	These technologies allow signal logic to change based on traffic condition information collected by sensors.	**Supplementary solution:** Traffic conditions data can be collected through DSRC instead of sensors. This would require medium to high market penetration for data accuracy.
Traffic Signal Interconnect	The interconnect slaves traffic signals to a common clock for executing pretimed plans via fiber optics or wireless communication.	**Supplementary solution:** DSRC can serve as the wireless communication medium for intersections that are within a 400-meter line of sight of each other.
Closed-Circuit Television (CCTV) Cameras	CCTV cameras provide real-time visual monitoring of a road facility requiring a high-capacity communications network.	**N/A:** Existing CCTV would help CV deployment, as the existing backhaul communications can be utilized.
Transit Signal Priority (TSP)	Transit vehicle requests extend green to clear intersection.	**Alternative solution:** DSRC can serve as a wireless communication medium and provide a response to the vehicle advising whether priority has been granted.
Emergency Vehicle Preemption	An emergency vehicle requests overrides of signal timing to provide green lights.	**Alternative solution:** DSRC can serve as a wireless communication medium and provide a response to the vehicle advising whether preemption has been granted.
Pedestrian Push Buttons and Countdown Signals	Pedestrians request walk signals (particularly for adaptive traffic signals) and are provided with a visual count-down of remaining crossing time left.	**Complementary solution:** Disabled or senior pedestrians can request a walk signal and/or extended green time through a DSRC-enabled smartphone.

Source: Cambridge Systematics, Inc.

5.0 C/AV Case Studies

This section's goal is to examine how to incorporate C/AV into specific transportation plans/programs. The background provided in sections 2.0 through 4.0 informs the discussion of potential impacts and recommended strategies.

There are a total of 11 selected C/AV case studies. The following is a list of the selected planning products on which the case studies are based:

1. Transportation Improvement Program.
2. Regional ITS Architecture.
3. Bicycle and Pedestrian Plan.
4. Long-Range Metropolitan Transportation Plan.
5. Asset Management Plan.
6. Strategic Highway Safety Plan.
7. State Implementation Plan.
8. Transit Development Plan.
9. Public Involvement Plan.
10. Freight Plan.
11. Financial Plan.

Each case study includes an overview of a specific transportation plan/program, explores potential impacts of C/AV on the planning process and related activities, and presents an example C/AV project. Topics discussed include the role of C/AV, potential impacts of incorporating C/AV, and financial considerations. The C/AV applications discussed in the example projects have been introduced in section 2.4

5.1 Transportation Improvement Program (MPO)

MPOs develop TIPs to identify the transportation projects and strategies from the MTP that they plan to undertake over the next four years. The TIP must include all projects that are receiving Federal funding, are subject to a Federally required action, or are regionally significant and must provide public involvement opportunity through the programming process (23 U.S.C. 154(j)). The TIP contains funding information for all modes of surface transportation, including highways and transit capital and operating costs.

The TIP represents an agency's intent to construct or implement a specific project and the anticipated flow of Federal funds and matching State or local contributions. As part of the performance-based TIP, project selection criteria are used to narrow the long-range list into a short-range program. Also included is a discussion of how the selected projects will support the performance targets established in the MTP as part of the performance-based planning and programming process required under MAP-21.

The key elements of the TIP are as follows:

1. **Project Selection Criteria.** Develop a set of evaluation metrics, such as "scoring techniques" or other quantitative approaches to rank projects.
2. **Project List.** Prioritize a list of projects and strategies from the MTP to be programmed over the four years. Discuss the connection to the goals and objectives established in the MTP.
3. **Financial Plan.** Determine the funding sources and match to projects and strategies.
4. **Monitor and Evaluate.** Monitor funded projects and strategies and evaluate their effectiveness in supporting performance targets established in the MTP.

This case study will focus on MPOs; however, the C/AV discussion also is relevant to the State Transportation Improvement program (STIP). The STIP is the short-range program for the State LRTP and must include all projects from the TIP.

TIP Elements and the Role of C/AV

One of the important roles of C/AV in the TIP will be to spur a modification of project selection criteria to better incorporate advances in technology. As C/AV technology evolves, agencies may find it useful to reevaluate their selection criteria and/or scoring process to account for benefits associated with C/AV technology and projects.

Below, the role of C/AV is examined in more detail within the framework defined above. A summary of each element is provided, followed by a discussion of how to incorporate C/AV and its potential impact.

Element 1. Project Selection Criteria

In the first element of the TIP, MPOs develop evaluation metrics to score and rank projects. In general, projects are evaluated and scored based on technical measures of how well they fulfill the goals of the MTP. Examples of project selection criteria include whether the project will improve air quality, access to job opportunities, or system reliability. Scoring techniques vary between MPOs, but the end result is a ranked list of projects to be submitted for inclusion in the STIP. C/AV considerations relevant to this step include the following:

- As C/AV is an emerging technology, it may be difficult to quantitatively rank C/AV projects using traditional evaluation metrics, such as benefit-cost ratio. The estimates for costs and benefits are still preliminary, and depend on many factors such as market penetration, industry competition, and regional coordination. FHWA is developing a tool for estimating cost benefits and economic development benefits of CV deployment at the local, regional and statewide level. This tool is expected to be complete and posted on the FHWA Web site in spring 2016.
- Lessons for C/AV in the TIP selection process can be gleaned by examining ITS projects in agencies' TIP programming. Compared to traditional capital projects (roadway expansion, new transit service, etc.), ITS projects have relatively low capital costs but require ongoing O&M costs. C/AV investments and O&M costs are eligible for Federal-aid funds in the same manner that ITS investments are. More detail will be available in the 2015 FHWA V2I Deployment Guidance.
- Project selection criteria should be modified to better incorporate advancements in C/AV technology. As C/AV technology evolves, agencies may find it useful to reevaluate their selection criteria and/or scoring process to account for benefits associated with C/AV technology and projects. This process requires that benefits and costs of deployment be tracked to the extent possible once projects are implemented.

- Existing ITS project selection criteria and existing pilot deployments should be used as a starting point. For example, the North Jersey Transportation Planning Authority (NJTPA) assigns points to projects that utilize technology to effectively address traffic congestion.

Element 2. Project List

The project prioritization and scoring process discussed above results in a list of projects from the MTP to be programmed over the four years of the program. In general, projects with higher scores serve to best advance the goals and objectives established in the MTP. Projects also should be vetted through a public participation process. Once the project list is finalized, the TIP should include a discussion of how the selected projects will support the performance targets establish in the MTP. C/AV considerations relevant to this step include the following:

- As C/AV technology is continually improving, the C/AV application identified in the MTP should be reviewed and updated to assess short-term applications bundles ready to be programmed.
- Public involvement techniques should accommodate awareness of C/AV technology, which will require development of an educational component oriented toward the general public. Case Study #9, Public Involvement Plan, provides a discussion of these techniques.
- In the short term, C/AV deployment will likely take the form of small-scale pilot projects that are assessed and adjusted with each TIP. In the medium to long term, C/AV deployment can potentially become a standard strategy, with large-scale investments over multiple TIPs. It is important to note that even when C/AV pilots are funded with special grants, ongoing maintenance and operations funding should be provided if the project is to continue after initial funds run out.

Element 3. Financial Plan

The third element is the financial plan, in which agencies identify funding sources and match these sources to projects and strategies. The financial plan should include a discussion of how the TIP can be implemented, resources from public and private sources that are reasonably expected to be available to carry out the program, and innovative financing techniques to finance projects, programs, and strategies. The fiscal constraint mandate of Federal law requires that the TIP include only projects for which funding is reasonably available, but for illustrative purposes, the financial plan can highlight additional projects that would be included in the approved TIP if reasonable additional resources were available. C/AV considerations for the financial plan are analyzed in Case Study #11.

Element 4. Monitor and Evaluate

The final element involves monitoring and evaluating progress toward the goals, objectives, and performance targets established in the MTP. This process includes the analysis of performance data to help agencies better understand projects and approaches that best enhance the performance of the transportation system within the agency's financial constraints. The analysis should then inform future decisions about investments and priorities. Key C/AV considerations relevant to this element include the following:

- When C/AV pilots are still ongoing, results are preliminary and much of the collected data is still being analyzed. While formal reports may not yet be available, there may still be many valuable lessons to learn. Agencies should share information with other agencies about their works in progress.

- Agencies should thoroughly document the impact of C/AV investments on the transportation system, along with costs and best practices. In order to motivate future investment in C/AV technology, it is critical to evaluate the effectiveness of C/AV deployments on supporting performance targets, both directly (installing infrastructure) and indirectly (collecting data).

Example Project: Emergency Vehicle Preemption

Emergency response vehicles (EV), including police vehicles, ambulances, and fire trucks, provide visual and audio alerts of their presence (e.g., sirens and flashing lights) to prompt surrounding vehicles to clear a path. Unfortunately, the effectiveness of these alerts is limited by background and in-vehicle noise, with drivers sometimes having difficulty determining the source and path of the EV. This confusion has resulted in collisions, creating concerns about both safety and mobility.

Traffic signal controllers enable signal preemption by detecting oncoming EVs and changing the desired direction to green, while stopping traffic on all other approaches. EVs are equipped with emitters that provide one-way communication requesting preemption. Unfortunately, conflicting requests from multiple EVs needing preemption have resulted in collisions.

A recent study supported by U.S. DOT researched CV-based strategies that could improve safety and response times for EVs in congested urban environments. Through V2V and V2I communication, an EV can broadcast its location, route, and final destination to vehicles and infrastructure in its path. This information can be processed to provide directions that clear a safe path for EVs to their destination. Traffic signals along this path can be optimized to clear downstream intersections. Preliminary results from Arizona's Test Bed in Maricopa County have concluded that DSRC is a viable medium for traffic signal priority.

The TIP example project is a subset of the MTP example C/AV strategy described in Case Study #4 Long-Range Transportation Plan. The large-scale strategy is to be implemented over time, over many TIP cycles. For this example project, an MPO is implementing the Emergency Vehicle Preemption (PREEMPT) application and related infrastructure.

Table 5.1 presents a high-level preliminary estimate of the capital costs to deploy and pilot C/AV infrastructure, equipment, and PREEMPT application. The pilot will be on part of the corridor, a 10-mile urban arterial section. There is about one-half-mile spacing between intersections, totaling 20 intersections. There will be DSRC RSUs installed at all intersections and aftermarket OBUs installed on 10 emergency vehicles. The total budget for the initial deployment and testing of the C/AV strategy ranges from a $433,000 to $1.7 million. There are other costs not captured here, such as annual operations and maintenance costs. (See section 3.3 for an explanation of the deployment elements.)

Table 5.1 Preliminary Cost Estimates for PREEMPT

Item	Quantity	Per Unit Cost	Total Costs
DSRC RSU	20 intersections	$13,100-$21,200	$262,000-$424,000
Signal controller upgrade	20 intersections	$3,200	$64,000
Backhaul communications	20 intersections	$3,000-$40,000	$60,000-$800,000
Light Vehicle OBU with additional features	10 vehicles	$4,700	$47,000
C/AV Project Total	–	–	**$433,000-$1,657,000**

Source: Cambridge Systematics, Inc.

5.2 Regional ITS Architecture (State)

A regional ITS architecture is required by the FHWA Rule/FTA Policy for regions that have deployed, or will be deploying, ITS projects funded from the Highway Trust Fund. The regional ITS architecture is developed from the National ITS Architecture and a list of projects that involve ITS and, in some cases, operational improvements. The definition of a "region" in this context varies; it can be a county, a metropolitan planning area, a State DOT district/region, or a multistate region. The region is responsible for the development, use, and maintenance of the regional ITS architecture. The timeframe and update cycle should be coordinated with transportation plans such as the LRTP or TIP.

To create a bridge between regional ITS architecture and transportation plans, some regions choose to develop an ITS Strategic Plan (which defines the approach to deploying ITS over time in the region) or a transportation systems management and operations plan (which defines the strategic vision for operations). These "ITS/operations plans" and the leveraging of regional ITS architecture in support of planning for operations also are discussed in this section.

The essential steps to developing and using a regional ITS Architecture include the following:

1. **Scope and Stakeholders.** Based on the scope of the region, identify the relevant stakeholders, one or more champions, and the team involved in architecture development.
2. **Data.** Inventory existing and planned ITS systems in the region, define the roles and responsibilities of each stakeholder, and identify the ITS services that should be provided in the region.
3. **Interfaces.** Define existing and planned interfaces between ITS systems, including connections and information exchange. Interfaces are basically connections between different systems, between systems and equipment or between different pieces of equipment. For example, a connection between a regional freeway operations center and a local traffic signal management center would be identified and defined in this step.
4. **Agreements and Standards.** Define additional products to guide implementation of projects that will flow from the regional ITS architecture, including a sequence of projects, a list of requisite agency agreements, and a list of standards.
5. **Regional Architecture Use.** Utilize the architecture in transportation planning and project implementation to identify opportunities for making ITS investments in a more cost effective fashion.

6. **Regional Architecture Maintenance.** A maintenance plan guides controlled updates to the regional ITS architecture baseline so that it continues to accurately reflect the region's existing ITS capabilities and future plans.

The focus of this section will be on State DOTs and discuss how to integrate CV into the statewide ITS Architecture; however, the C/AV discussion is relevant to all regions developing an ITS Architecture.

Statewide ITS Architecture Steps and the Role of CV

The important roles of C/AV in the statewide ITS Architecture will be to enhance current ITS services, strengthen the linkage between operations and planning, and change operations planning priorities.

Below, the role of C/AV is examined in more detail within the framework defined above. A summary of each step is provided, followed by a discussion of how to incorporate C/AV and its potential impact.

Step 1. Scope and Stakeholders

The first step in building the statewide ITS Architecture is for DOTs to engage stakeholders and determine the basic scope. Potential stakeholders can be contacted through ITS working groups already in place. To engage stakeholders, DOTs prepare outreach materials that provide examples of benefits of ITS Architecture. The basic scope includes identifying State-level and potential interregional services over specified geographic areas and timeframes. Important C/AV considerations relevant to this step include the following:

- DOTs should identify and/or train agency staff who are knowledgeable about CV architecture and who can engage both public and private stakeholders. This process also should identify champions who can lead this effort.
- Potential stakeholders in CV architecture can be contacted through existing ITS working groups and public agencies. Traffic engineers, transit agencies, emergency response personnel, and planners are among the more important participants. Agencies also should contact private organizations involved in providing connected vehicle services in the State, such as OEMs and telematics companies.
- Agencies should present information about C/AV technology, its benefits, and the objectives of enabling a connected vehicle environment in order to gain support from stakeholders. Discussion of challenges and ongoing research initiatives will help when responding to concerns identified by the stakeholder community.
- DOT's should create a regular process for reviewing documents relating to CV standards, including interfaces, equipment, and related policy development. The U.S. DOT currently has a major effort underway to develop the Connected Vehicle Reference Implementation Architecture (CVRIA). CVRIA is being developed as the basis for identifying the critical interfaces across the connected vehicle environment such as how CV-related roadside equipment would interface with a Traffic Management Center. CVRIA also will inform policy considerations regarding certification, standards, core system implementation, and other elements of the connected vehicle environment.
- Regions interested in CV systems should coordinate with each other to ensure cost effective deployment and adherence to a standard CV architecture. Given that CV standards are still in development, agencies may need to adjust the Statewide ITS Architecture timeline accordingly.

Step 2. Gather Data

The second step is to develop an inventory of ITS systems, document needs, develop an operational concept, and identify functionality requirements. The comprehensive inventory will be based on existing inventories and stakeholder input, including existing and planned ITS systems in the State. Through stakeholder collaboration, the agency should document State-level and interregional needs and identify candidate services that will address those needs. An operation concept outlines stakeholder roles and responsibilities for the implementation of the ITS elements. High-level functional requirements describe the functions that the ITS elements perform to provide ITS services. Important C/AV considerations relevant to this step include the following:

- DOTs should document existing assets to create a baseline for CV deployment in the State, including existing and planned CV elements of pilots and projects at the State and interregional level. It also may be useful to identify CV elements in place at the regional or local level. “CV elements” include the field (e.g., RSU), vehicles (e.g., aftermarket OBU), and centers (e.g., traffic management centers).
- DOTs also should identify CV services that could address State-level and interregional needs, including CV technology that can enhance current ITS services, serve as an alternative to ITS services, or provide new CV services. Section 4.0 provides some examples.
- Agencies should spell out stakeholders’ roles and assign responsibility for deployment, operation, and maintenance of CV elements, including infrastructure, equipment, and data. Existing roles and responsibilities should be updated as CV technology is transitioned in, and new ones may be necessary.
- Agencies also should clearly define the functional requirements of CV elements and explain them to all stakeholders. There should a consensus on the role of CV elements in providing new CV services or enhancing existing ITS services. For functional requirements associated with system integration and data sharing, security requirements that protect the privacy, integrity, and availability of the connected system also should be identified.

Step 3. Interfaces

The third step is to define interfaces between the ITS elements: the connections and information flows. Based on the inventory, services, operational concept, and functional requirements determined in previous steps, DOTs identify the inventory elements with connections. Information flows are described by a source element, a destination element, and a descriptive name for the information itself. The National ITS Architecture will be used to identify potential connections and define information flows, with customization as needed. Important C/AV considerations relevant to this step include the following:

- The process should identify the inventory elements of existing and planned ITS systems that can potentially communicate with the CV environment, including emergency vehicles, traffic management centers, and security equipment. A visual diagram is a useful way to present connections between CV elements and to existing/planned ITS elements.
- The agency should define the means of information flow between the CV elements and to existing/planned ITS elements, taking into account whether the CV element is providing or consuming information (or both) and describing the content itself. Information flows should be evaluated against the security requirements previously defined. A visual diagram is a useful way to present information flows between CV elements and to existing/planned ITS elements.
- In the short term, CV elements will enhance the functionality of current ITS services. Over the medium to long term, CV elements will replace some applicable ITS elements and/or provide new

services. A transition plan may be useful in describing how existing interfaces will be updated and new interfaces integrated.

- The most recent National ITS Architecture 7.1, along with the Turbo Architecture software tool, has added new linkages that connect services packages with CV applications defined in CVRIA; however, many CV applications are still being developed and/or tested, so CVRIA continues to be updated. Agencies should check the CVRIA Web site for the most current information and participate in future updates.

Step 4. Agreements and Standards

The fourth step is to sequence ITS projects and develop agreements and standards. To implement the statewide ITS Architecture effectively, DOTs should coordinate and sequence ITS projects, taking into account the feasibility, benefits, and dependencies of each project. Information exchange agreements between stakeholders should be developed along with a list of other required agreements (operations, integration, funding, etc.). Using the information flows identified in Step #3, agencies can identify the relevant ITS standards for the region, using interim standards where necessary.
Important C/AV considerations relevant to this step include the following:

- Agencies should identify CV projects in order to update the architecture of existing ITS systems so that it can accommodate CV infrastructure and equipment. An assessment of project dependencies and the degree to which information, facilities, and infrastructure can be shared between CV projects will allow CV projects to incrementally build on each other.
- Agencies should coordinate CV project documentation with existing State documents such as the STIP and State LRTP in order to mainstream CV projects into the transportation planning process. Short-term CV projects should be defined in as much detail as possible so that they can flow directly into the State programming or budgeting processes. For projects proposed for the medium to long term, categories of projects can be defined as initiatives; those initiatives can then be included in the State LRTP.
- Agreements needed for implementation of CV projects will include multiple stakeholders as parties. As CV projects will likely be implemented through public-private partnerships. Private companies could operate CV infrastructure, manage security credentials, and provide cellular communications. Agencies will be required to incorporate provisions relating to data ownership and use of rights-of-way into those agreements.
- Agencies should identify common standards for CV projects in order to provide interregional connectivity and a consistent user experience for the traveling public. U.S. DOT will use CVRIA to identify interfaces, prioritize candidate standards to implement the interfaces, and create a Standardization Plan.
- As noted above, agencies should work with the private sector. Private-sector entities play a role in the technology arena and can share information about emerging technologies and support development of mutually beneficial standards, among other activities.

Step 5. Regional Architecture Use

The fifth step is to use the statewide ITS Architecture to identify opportunities for making ITS investments in a cost effective fashion. To support planning *processes*, the statewide ITS Architecture can improve interjurisdictional integration and serve as the basis for O&M strategies. To support ITS project *programming*, the statewide ITS Architecture should provide project definition, sequencing recommendations, and critical system engineering analysis activities.

Important C/AV considerations relevant tor this step include the following:

- The process of integrating CV elements into the statewide ITS Architecture can help to enhance the linkage between operations and planning through involvement of a wider array of stakeholders. For example, creation of new data sources and integration with existing ITS elements can increase data sharing between planning and operations.
- In the medium to long term, CV technology may result in a large reduction in numbers of crashes and change operations planning priorities, with fewer resources allocated to incident management. O&M strategies in State LRTP and ITS/operation plans should be updated accordingly to include CV applications.
- The CV project definitions and sequencing recommendations can serve as direct input to the TIP and project program. CV project sequencing contains information about matters such as stakeholders, costs, and benefits that are useful to the evaluation and prioritization process. The ITS/operations plan may provide more information regarding the needs addressed by ITS and funding considerations.
- Utilization of the statewide ITS Architecture to implement CV projects, especially at the regional level, provides context for how that project fits within surrounding systems. Furthermore, it provides a starting point for system engineering analysis. Part of the CVRIA, the Systems Engineering Tool for Intelligent Transportation (SET-IT) is a software tool that can used to draw project architectures specific to CV.

Step 6. Regional Architecture Maintenance

The final step is to identify individuals to lead the maintenance effort and develop a maintenance plan. This includes identifying outputs/documents to be maintained and a change management process. A maintenance plan is used to guide controlled updates to the statewide ITS Architecture baseline so that it continues to accurately reflect the State's needs, stakeholders, and existing and planned ITS systems.

Important C/AV considerations relevant to this step include the following:

- Agencies *should* identify the organization that can lead the maintenance process regarding CV elements. As CV is an emerging technology that is rapidly improving, this entity should track the progress of CV pilots and CVRIA; furthermore, the change management process should allow for frequent updates.
- Agencies should revisit the maintenance plan frequently in order to keep the CV elements of the statewide ITS Architecture up to date. As CV technology improves, there may be more opportunity for CV services to meet the State's needs, as well as those of more interested stakeholders.

Example Project: Virtual Dynamic Message Signs

Dynamic message signs (DMS), also known as variable message signs, are installed on highways so that the traffic management center can provide current information to the traveling public about matters such as accidents, detours, and weather warnings. These traditional DMS systems are expensive to deploy and require ongoing maintenance. Aside from the sign itself, agencies also need to invest in supporting structures and communications. Although DMSs provide valuable information to the traveling public, limitations such as legibility distance and language barriers can cause comprehension issues and excessive braking.

The Mid-Atlantic Universities Transportation Center (MAUTC) has studied the potential benefits and costs of utilize CV technology to provide a virtual DMS system. CV technology can provide a more cost effective and flexible solution through virtual DMS. The messages can be received through an in-vehicle system using DSRC communications. Messages can be made audible and/or converted to a different language.

For the ITS example project, capital costs of traditional and virtual DMS systems are compared at a high level. The traditional DMS system project consists of two DMSs for each side of the freeway, related supporting structures and controllers, and a half-mile of fiber-optic communication. The virtual DMS project consists of two RSUs for each side of the freeway and backhaul communications for each site.

Table 5.2 lists and compares the capital costs of a traditional and DSRC-based system. The total average cost of the traditional DMS system is $560,000 and total high-end cost of the CV-based virtual DMS system is $122,000. The CV-based system can potentially cost must less because of the lower asset requirements and labor costs. For example, while a traditional DMS needs to be mounted across the highway so that it is in line of sight for drivers, a DSRC RSU can be installed along the road since messages are received inside the vehicle. In addition to being less expensive, the DSRC RSU may be a more versatile investment, as it can be utilized for other in-vehicle messages such as work zone and queue warnings. (There are other costs not captured here, such as annual operations and maintenance costs. See section 3.3 for an explanation of the deployment elements.)

Table 5.2 Preliminary Capital Cost Comparison of Traditional and Virtual DMS

Traditional DMS Item	Traditional DMS Total Average Cost	CV-based Virtual DMS Item	CV-based Virtual DMS Total Maximum Cost (preliminary estimates have large ranges; the maximum value is presented here)
DMS (2)	$217,000	RSU (2)	$42,400
Support structures (2)	$231,400	–	–
Communications and Power (0.5 mile)	$67,500	Backhaul Communications (2)	$80,000
Controller and Other (2)	$43,800	–	–
Total	$559,700	Total	$122,400

Source: Cambridge Systematics, Inc. with input from “An Evaluation of the Economic Feasibility and Implementation of Virtual Dynamic Message Signs,” Alona Green, Morgan State University, July 2015.

In order to receive and display messages from the RSU, the traveling public would need be in a DSRC-equipped vehicles. In the short term, the traveling public would be responsible for investing in an aftermarket OBU (similar to toll transponders). Given that current DMS systems provide

information to the public at no cost, it would be difficult to motivate voluntary investment if this were the only benefit. Agencies may consider providing incentives or offering to install aftermarket units in order to pilot the virtual DMS system and introduce it to the traveling public. Over the medium to long term, DSRC technology is anticipated to become standard and will not require additional investment from the traveling public.

As market penetration of CV-enabled passenger vehicles matures and as traditional DMSs reach the end of life, agencies should consider investment and transition to a CV-based virtual DMS. During the transition to market maturity, agencies may need to operate in a mixed environment with both traditional and virtual DMS systems.

5.3 Bicycle and Pedestrian Plan (MPO)

MPOs are required by Federal legislation to include bicycle and pedestrian elements in MTPs and TIPs, such as policy statements and goals, specific projects and programs, and financial resources (23 U.S.C. 134(c)(2) and 135(a)(2)). These elements are subject to procedural MTP and TIP requirements, including those requiring public involvement, specifying timeframes, and imposing an update cycle. (Bicycle and pedestrian facilities are exempt from air conformity requirements, however.) Some MPOs also choose to develop a standalone pedestrian and/or bicycle plan. FHWA provides guidance to agencies on how to implement bicycle and pedestrian provisions.

Elements of a bicycle and pedestrian plan should include the following:

1. **Vision, Goals, and Performance Measures.** Develop high-level vision statements, measureable goals, and performance measures.
2. **Current Conditions and Needs.** Collect baseline information such as current level of use, injuries and fatalities, and infrastructure conditions. Use the developed performance measures to assess needs and identify gaps.
3. **Strategies to Meet Vision and Goals.** Identify strategies to meets the stated goals and determined needs. These can include policies, educational efforts, or infrastructure improvements.
4. **Inclusion in MTP and TIPs.** Incorporate the identified strategies into the MTP and TIP, following the timeframe and update cycle.
5. **Evaluation of Progress.** Monitor progress toward identified vision and goals and update strategies accordingly.

The focus of this case study will be on MPOs; however, the C/AV discussion also is relevant to the State bicycle and pedestrian plan.

Bicycle and Pedestrian Elements and the Role of C/AV

One of the important roles of C/AV in the Bicycle and Pedestrian Plan will be to increase the visibility of bicyclists and pedestrians to both the traffic system and motor vehicles, potentially improving both safety and mobility. C/AV probe applications also may provide an innovative way to collect bicycle infrastructure condition and performance data.

Below, the role of C/AV is examined in more detail within the framework defined above. A summary of each element is provided, followed by a discussion of how to incorporate C/AV and its potential impact.

Element 1. Vision, Goals, and Performance Measures

The first element of the Bicycle and Pedestrian Plan is a description of the vision, goals, and performance measures associated with the plan. Vision statements are intended to concisely express what the plan is expected to accomplish. Next, measureable goals should be defined which serve to achieve the vision. Finally, network performance measures—i.e., facility continuity, number of bicycle links with transit, cost, etc.—should be developed to support locally determined bicycle and pedestrian program implementation efforts. C/AV considerations relevant to this element include the following:

- C/AV technology can make bicyclists and pedestrians more visible to both the traffic system and motor vehicles, potentially improving both safety and mobility. Bicyclists and pedestrians that participate in the CV environment through DSRC-enable smartphones can broadcast their location to infrastructure and motor vehicles.
- In order to encourage the traveling public to participate in the C/AV environment (e.g., provide location data), agencies should clearly explain the technology and benefits, along with responding to any concerns.
- Transportation Performance Management rules now under development would include bicycle and pedestrian infrastructure performance measures (condition, safety, etc.). Theses rules would encourage expansion of data collection options regarding the bicycle/pedestrian network and overall safety. C/AV probe applications may provide a means to collect data for use in bicycle and pedestrian infrastructure performance measures.

Element 2. Current Conditions and Needs

The second element of the plan is an assessment of current conditions and needs. This element will help determine the extent to which the existing transportation system meets the needs of bicyclists and pedestrians. The assessment may include an analysis of current levels of use for bicycling and walking transportation trips and the number of injuries and fatalities involving bicyclists and pedestrians. It also can include an evaluation of the existing transportation infrastructure (including on- and off-road facilities) to determine current conditions and capacities and to identify gaps or deficiencies in terms of accommodating potential and existing bicycle and pedestrian travel. Agencies may choose to identify desired travel corridors for bicycle and pedestrian trips. C/AV considerations relevant to this element include the following:

- C/AV probe applications are an innovative way to collect bicycle infrastructure condition and performance data.
- Agencies should identify existing infrastructure that should be upgraded or integrated in order to support C/AV bicycle and pedestrian applications. For example, signal controllers may need to be modified and/or upgraded in order to communicate with DSRC RSUs.
- A major role of C/AV technology will be to introduce cost effective data sources and collection methods. In the short term, baseline information will continue to be collected by traditional methods. Over the medium to long term, C/AV technology can supplement and replace existing sources and methods. For example, bicycle travel times, pavement condition, and routing data can be collected by C/AV technology in the short term to aid in the identification of system gaps and/or deficiencies. Section 4.0 provides more examples.
- Agencies should assess the potential needs created by C/AV investments, particularly the resources needed to store and analyze the increased volume of data generated by C/AV applications. As noted in section 3.0, the development of policies and regulations related to data availability and usage should be tracked by agencies wishing to use the data. Planning agencies may play a role in influencing related laws, policies, and regulations.

Element 3. Strategies to Meet Vision and Goals

The third element of the plan involves the identification of strategies required to achieve the vision and goals developed in Element 1. These strategies may include policies and infrastructure improvements. Examples of potential policies include the development and application of criteria to prioritize and identify specific facility-related improvements. They also may include changes to planning, design standards, and agency policies, and ensuring that statewide, MPO, and local plans for bicyclists and pedestrians are coordinated among the involved jurisdictions. Infrastructure improvements include modifications to the existing transportation system of on- and off-road facilities to facilitate safe bicycle and pedestrian travel. C/AV considerations relevant to this element include the following:

- Agencies should deploy small-scale pilots to generate interest in and safely test C/AV applications, as there are limited C/AV pilot deployments focused on bicyclists and pedestrians.
- Over the medium to long term, C/AV may reduce vehicle travel lane and parking requirements, which could free up space for bicycle and pedestrian infrastructure.
- C/AV technology can improve safety by warning vehicles of the presence of pedestrians and bicyclists (PSCW application) and improve the mobility of disabled and/or elder pedestrians by extending walk indications (PED-SIG application). Furthermore, the PED-SIG application also can integrate audio and tactile feedback, providing a novel way to improve accessibility at intersections for the visually impaired pedestrians. The PED-SIG application is discussed in more detail in the example project.
- While C/AV technology can potentially provide benefits to bicyclist and pedestrians, it is important to continue to consider the safety and mobility of bicyclists and pedestrians not participating in the CV environment.

Element 4. Inclusion in MTP, TIPs, and Transition Plans

The bicycle and pedestrian elements, as a set of policy statements and/or a list of projects, should be included in the MTP, TIPs, and accessibility transition plans. (When pedestrian infrastructure is not accessible the responsible agency is required to develop a plan to make it accessible (e.g., off/on ramps.) These elements should be updated as State LRTP and MTP plans are updated. Additionally, the bicycle and pedestrian elements of the transportation plan should be implemented by including identified projects in the TIP in accordance with priorities established by MPOs, States, and transit operators. C/AV considerations relevant to this element include the following:

- Agencies should coordinate with appropriate points of contact to ensure compliance with accessibility requirements.
- Agencies should collaborate with MPOs and local transit agencies to integrate bicycle and pedestrian elements into transit- and motor vehicle-focused C/AV investments.
- Bicycle and pedestrian advocacy groups are often active participants in these planning efforts. They can serve to inform their communities about the potential benefits of C/AV technology and help recruit members of the public to test and ultimately adopt the technology.
- While data on the capital, operations, and maintenance costs of C/AV is available, it is preliminary. As an emerging technology, C/AV has costs that are subject to change due to such factors as geography, vendor product differentiation, and software options. As the technology is produced in larger volumes, costs will decrease. Agencies should understand the current limitations of cost estimates, track ongoing deployments, and build into their plans the ability to make cost estimate adjustments over time.

Element 5. Evaluation of Progress

As the final element of the plan, MPOs regularly determine progress in reaching the identified vision and goals using the performance measures developed in Element 1. As part of the performance-based planning and programming feedback process, appropriate changes should be made either to the vision and goals or to the strategies and proposed projects. MPOs also should provide a mechanism for evaluating the performance of the transportation system (reflecting implemented projects) against the performance of the base system. C/AV considerations relevant to this element include the following:

- Agencies should foster realistic expectations about short-term impacts of C/AV applications, as initial applications will be modest in terms of scope, geography, and capabilities. In the medium to long term, C/AV technology is expected help regions meet more ambitious goals and objectives. Measurable goals for nonmotorized programs are likely to include reduced bicycle/pedestrian crashes and increased usage and mode split for these modes.
- Agencies should thoroughly document the effectiveness of C/AV deployments in improving the transportation system for bicyclist and pedestrians, along with costs and deployment best practices. As there are limited C/AV applications focused on bicyclists and pedestrians, this information is valuable and can motivate more research in this area. Smartphone-based applications provide an opportunity to collect much of this information, but privacy concerns should be addressed through methods such as opt-in programs.

Example Project: PED-SIG

The mobile pedestrian (and bicyclist) signal system (PED-SIG) application allows users to broadcast his/her location and request extend walk (green) time. Users interface with infrastructure through an application on a DSRC-enable smartphone. The use case for pedestrians is for senior citizens and the disabled who need more time to cross the intersection. The application also can provide visual and haptic feedback to help visually impaired users. The use case for bicyclists is at actuated intersections where bicycle detection and travel time is not sufficient. The application also can collect data and inform authorities of traffic signals that should be adjusted to better accommodate bicyclists.

The Arizona Test Bed in Maricopa County currently is testing various applications, include a pedestrian mobility application. The Savari SmartCross was demonstrated to and positively received by of group visually impaired stakeholders (PED-SIG is the generic application name, while SmartCross is a specific application developed by Savari.)

The bike/ped example project explores the costs and benefits of a pedestrian and bicyclist mobility application. In this application, a bicyclist or pedestrian broadcasts his or her location information and makes an extension request to the RSU. The user will receive a response if the request was successful. The RSU processes the request and interfaces with the traffic signal controller.

Table 5.3 presents a high-level estimate of capital costs to deploy CV infrastructure, equipment, and the PED-SIG application. DSRC RSUs will be installed at each of the 10 intersections and pedestrians/bicyclists will be equipped with DSRC-enable smartphones. Each intersection will require a signal controller and backhaul upgrade. While there are separate applications with various mobility and safety features, to develop a comprehensive application will require more software development costs. The total budget of this project ranges from $502,000 to $1.1 million. (There are other costs not captured here, such as annual operations and maintenance costs and public outreach costs. See section 3.3 for an explanation of the deployment elements.)

Table 5.3 Preliminary Cost Estimate for PED-SIG

Item	Quantity	Per Unit Cost	Total Costs
DSRC RSU	10 intersections	$13,100-$21,200	$131,000-$212,000
Signal controller upgrade	10 intersections	$3,200	$32,000
Backhaul communications	10 intersections	$3,000-$40,000	$30,000-$400,000
Mobile application development	1	$300,000	$300,000
Mobile Smartphone Upgrade	30 units	$300	$9,000
C/AV Project Total	–	–	**$502,000-$1,114,000**

Source: Cambridge Systematics, Inc.

Agencies should take precautions to provide consistent and intuitive information for the safety of all users. For example, if the extended walk time is been granted, the walk countdown and traffic signals needs to be coordinated.

Along with the data collected from the mobile applications, surveys also should be conducted to assess both the actual and perceived impact. A secondary performance measure of level of service for motor vehicle traffic also may be useful.

In the short term, CV technology introduces a novel way for road infrastructure to respond to needs of vulnerable users. Over the medium to long term, as market penetration of CV-enabled smartphones and passenger vehicles increases, the benefits of a connected vehicle environment can be fully realized.

5.4 Long-Range Metropolitan Transportation Plan

States and MPOs both develop long-range transportation plans (LRTP). For States, this is known as the State LRTP. For MPOs, this is known as the Metropolitan Transportation Plan (MTP), also referred to as the regional LRTP and regional transportation plan (RTP). This section focuses on MPOs and thus the term “MTP” will be used; however, the analysis also is applicable to the State LRTP.

The MTP serves to guide regional decision-making, identifying strategies to meet desired outcomes of the transportation system and setting a framework for the investments made within a region. The plan must cover all modes of surface transportation over a 20-year or longer forecast, with an update required every five years (four years if the project is located within an air quality attainment area) (23 U.S.C. 134(i)). During the period covered by an MTP, emerging C/AV technologies may revolutionize transportation, making it imperative that the MTPs include planning to ensure that the infrastructure and data environment will support C/AV applications. In one of the first instances of this, the San Diego Association of Governments (SANDAG) has included a CV system strategy as in its 2050 RTP, which was adopted in 2011 (SANDAG, 2050 Regional Transportation Plan (RTP) and Sustainable Communities Strategy (SCS)).

As part of MAP-21 Federal requirements, MPOs are required to incorporate performance measures, targets, a system performance report, and a financial plan into their MTP. These performance

requirements supplement rather than replace existing planning requirements. MPOs are required to coordinate with their State DOTs to establish MTP performance measures to support national goals. To assist States and MPOs, FHWA created a guide describing the eight steps to develop a performance-based LRTP.

From the FHWA guide, the following are modified performance-based MTP steps:

1. **Gather Information on the Baseline Transportation System.** Identify existing transportation assets, compile estimates on travel patterns and land use, review relevant documents, and incorporate analysis of system revenue and cost.
2. **Establish Goals and Objectives.** Engage the public and stakeholders to help establish goals and objectives.
3. **Develop the Performance Measures and Targets.** Determine the performance measures and targets used to track progress toward objectives.
4. **Analyze Alternatives.** Identify system needs and analyze the alternatives that will move the system toward established targets.
5. **Develop a Financial Plan and Investment Priorities.** Assess funding sources, prioritize alternatives, and select the most cost effective solutions.
6. **Perform Transportation Planning and Programming.** Develop the transportation plan, documenting the data and methodology used to identify the selected investment strategy.
7. **Implement and Monitor.** Implement the transportation plan and monitor the performance measures.

MTP Steps and the Role of C/AV

One of the important roles played by C/AV in the performance-based MTP will be to provide some of the necessary data to track performance measures. In particular, performance measurement using C/AV technologies will be more comprehensive in coverage, provide significantly more granularity, and should in some cases be more reliable than current methods.

A summary of each step is provided, followed by a discussion of how to incorporate C/AV and its potential impact.

Step 1. Gather Information on the Baseline Transportation System

This first step includes identification of existing transportation facilities and intermodal connectors, compilation of estimates on demographics, land use, and travel patterns, and documentation of assumptions and forecasted trends. It also includes review of relevant studies, policies, and planning documents and incorporates analysis of system revenue and cost. Incorporating important C/AV considerations for this step require the following actions:

- Identify existing infrastructure that needs to be upgraded or integrated in order to support C/AV applications. For example, signal controllers may need to be standardized in order to communicate with DSRC RSUs.
- Compile estimates of the regional market penetration of C/AV technology over the short term and the medium to long term. As C/AV infrastructure is still isolated and only aftermarket units are available, initial deployment planning should consider transit and truck fleets, as well as public agency-owned passenger and maintenance vehicles.
- Establish a regular process for review of relevant documents addressing C/AV technology and applications, including test bed program reports, deployment guidance, proof-of-concept reports,

industry product information, and use-cases. U.S. DOT has a Web site that serves as a good starting point for planners looking for information.

- Understand capital and O&M costs associated with C/AV infrastructure and applications.
- Leverage the increasing C/AV planning engagement activities among States, MPOs, and local agencies; new agreements, standards, and methods can assist all parties in the baselining process.

Step 2. Establish Goals and Objectives

The second step is to envision the future of the region's transportation system. Stakeholders and the public are engaged to develop a vision that provides an overarching statement of desired outcomes, and leads to leads to well-defined goals and objectives. Goals reflect the key priorities of the desired outcomes and objectives are specific statements that support the achievement of those goals. Key C/AV considerations for this step include the following:

- A description of how C/AV can enhance and fulfill the vision of transportation for the region. Agencies should be realistic about short-term impacts of C/AV applications, as initial applications will be modest in terms of scope, geography, and capabilities. In the medium to long term, C/AV is expected help regions meet more ambitious goals and objectives. For example, NHTSA estimates that V2I and V2V systems can potentially address up to 81 percent of vehicle crashes. These potential impacts could be accommodated by identifying "stretch" goals that assume: 1) large-scale adoption of these technologies; and 2) close to the maximum impacts currently estimated are actually achieved. These goals will need to be revisited as the technology advances and empirical data on impacts becomes available.
- Clear presentation of the nature, benefits, and objectives of C/AV technology is an essential element in gaining support from the public and other stakeholders. MPOs should have an understanding of current and future challenges and ongoing research initiatives in order to answer questions and address concerns that the public and stakeholder community may have.
- As regional C/AV infrastructure is envisioned, issues such as environmental sustainability, social equity, and public acceptance (e.g., safety, privacy, liability, and data security) should be factored into policy development and decisionmaking. The impact of C/AV technology in setting and meeting these goals may be addressed through scenario planning techniques that are documented by FHWA in the "FHWA Scenario Planning Guidebook." For example the Guidebook identifies methods of developing and evaluating different land use density scenarios. Planners may use these as starting points and incorporate potential long-range impacts of automation and car-sharing such as reduced need for parking allowing greater residential and commercial densities.

Step 3. Develop the Performance Measures and Targets

Performance measures are an important element of comparing solutions and tracking system performance. As required by MAP-21, regional performance measures contained in the MTP should be inclusive of national transportation performance measures defined by FHWA. Moreover, for each performance measure, it is important to both identify and measure the preferred trend (reduce, increase, maintain) and to determine the specific target level(s) (e.g., freeway level of service). Elements specific to C/AV technology relevant to this MTP step include the following:

- A key strength of C/AV technology is the availability of expanded types of data, such as using vehicles as probes that will permit an expanded set of performance measures and improve tracking of set targets. In addition, C/AV infrastructure can efficiently support multiple applications

across multiple areas of performance measurement. For example, the same RSU that collects vehicle speed data for the EADSI application also can collect on-time performance data for the TSP application.

- C/AV is projected to significantly reduce crash rates over time. Performance target setting should consider both the short-term and medium- to long-term potential of C/AV technology to affect crash rates and safety.
- Planners should consider how performance measures and targets may be impacted by different scenarios. For example, current high levels of congestion make reducing vehicle miles traveled a desirable target. However, automated vehicle and car sharing could combine in the future to eliminate congestion in many areas that now experience it. When that happens, priority for mobility improvement could be providing access to those who are excluded due to cost or lack of service. In this case Person-Miles of Travel may become the primary mobility measure, with a goal of increase rather decrease.

Step 4. Alternatives Analysis

The assessment of alternatives involves two substeps. First is the creation of a systems report document that addresses baseline conditions and the performance of the transportation system in relation to measures and targets. This baseline information is needed to contextualize future expected performance under various investment scenarios. An important C/AV consideration relevant to this substep includes the following:

- A major role of C/AV technology will be to introduce cost effective data sources and collection methods. In the short term, baseline information will continue to be collected by traditional methods. Over the medium to long term, C/AV technology can supplement and replace existing sources and methods. For example, travel times and pavement conditions data can be collected by C/AV technology in the short term. Section 4.0 provides more examples.
- In the medium to long term, as C/AV vehicles enter the market, agencies should track these trends (as part of the baseline conditions) and assess the impact of the performance of the transportation system. For example, C/AVs may increase highway capacity by allowing closer headways but also may increase demand by making it easier for drivers to sit through traffic. Understanding existing trends and impacts are important for incorporating C/AV into the baseline in order to analyze expected performances under various scenarios.

The second substep in the assessment of alternatives is the identification of system needs and potential solutions, including needs assessment, identification of possible solutions and their costs, and solutions screening (based on environment and social considerations, policies, and other factors). Important C/AV considerations relevant to this substep include the following:

- Prioritization of potential C/AV solutions requires comparison of the potential benefits of short-term and medium- to long-term C/AV applications with system needs. AASHTO will develop an application prioritization tool to assist agencies with this process. C/AV solutions should be considered as a bundle of applications that complement each other and utilize the same infrastructure.
- Impacts of C/AV technology on major medium- to long-term investments will increase as market penetration of C/AV technology and users mature. Reduced crash rates and roadway capacity requirements could impact the benefit-cost ratios of medium- to long-term high-cost capital investments such as new fixed-rail transit lines and new/expanded freeways. Given the uncertainties in technology adoption and timing, agencies should, as part of the alternatives analysis process, analyze different scenarios and conduct a more rigorous level of risk analysis

than in the past, as well as evaluate alternative economic and land use assumptions. These assumptions should be revisited on a regular basis as C/AV technologies advance. Technical Memorandum #3 addresses this topic in more detail.

- While data on the capital, operations, and maintenance costs of C/AV is available, it is preliminary. As an emerging technology, C/AV has costs that are subject to change due to such factors as geography, vendor product differentiation, and software options. As the technology is produced in larger volumes, costs are expected to decrease. Agencies should understand the current limitations of cost estimates, track ongoing deployments, and build into their plans the ability to make cost estimate adjustments over time.
- Agencies should consider the potential requirements created by C/AV investments, particularly the resources needed to store and analyze the increased volume of data generated by C/AV applications. As noted in section 3.0, the development of policies and regulations related to data availability and usage should be tracked by agencies wishing to use the data. Planning agencies may play a role in influencing related laws, policies and regulations.
- Attention should be provided to the potential adverse impact to vulnerable road users, such as pedestrians. It is important that the safety and mobility of transportation users not participating in the connected vehicle environment are not compromised. Section 4.0 provides more discussion.
- Planners will need to work with a variety of technical personnel to develop and evaluate these alternatives. For example, alternative scenarios will be needed regarding roadway configuration for Level 3 and 4 automated vehicles. Several questions could be asked in building these alternative scenarios: Should a separate lane be set aside for Level 4 (fully automated vehicles), and if so, at what market penetration level should that be done? Can the same lane(s) accommodate both Level 3 and Level 4 vehicles? As market penetration increases what technologies could be used to set aside additional lanes without having to do major reconstruction? Defining these alternatives will require input from highway engineering, operations personnel and modelers among others. The decisions made could have an impact on the mix of project selected for the long-range plan.
- Development of alternatives also will involve consideration of impacts beyond the transportation system. Widespread adoption of automation by the commercial vehicle industry, for example, could bring economic changes to the industry that may result in significant shifts in location of warehouse and manufacturing employment. Alternative land use and economic scenarios thus become an important element of the long-range analysis. The FHWA Scenario Planning Guidebook provides an example of how to conceptualize various land use alternatives for purposes of environmental impact review. This methodology could be adapted to evaluation of C/AV technologies as follows:

Table 5.4 Relationship of Land Use Scenarios and Automated Vehicle Market Share

AV Threshold Market Share	Land Use Alternatives (Dispersed)	Land Use Alternatives (Town Centers)	Land Use Alternatives (Moderate-Density Core)	Land Use Alternatives (High-Density Core)
30% Market	Yes	Yes	No	No
60% Market	Yes	Yes	Yes	No
90%+ Market	Yes	Yes	Yes	Yes

Source: Cambridge Systematics, Inc.

- Scenario planning uses a set of assumptions to explore potential trajectories of change. For example, one scenarios may be based on the assumption that greater land use densities can be achieved with higher penetration of automated vehicles. Scenarios could then be modeled to look at impacts on the transportation system and determine whether the initial assumptions are realistic. This would in turn inform decisions regarding future investment and policy. As the timeline of a mature CV environment is still not certain, long-term scenario planning should still consider a mixed environment of CV, AV, and nonequipped vehicles.

Step 5. Financial Plan and Investment Priorities

Development of the financial plan and investment priorities in an MTP involves two major substeps. First, the financial plan is developed to estimate the available public and private funding and sources and, if needed, identify strategies to generate additional funding. This plan thus plays a critical role in investment analysis and project selection. C/AV considerations for the financial plan are analyzed in Case Study #11.

The second major process in this step is the analysis of alternative investment choices in order to develop a preferred investment strategy. This comprehensive process includes public and stakeholder engagement and involves assessment of how the selected alternative contributes to performance outcomes. Important C/AV considerations relevant to this substep include the following:

- The first generation of C/AV technologies is still emerging and being tested. This convergence of not-yet-mature technologies and short-term pilot infrastructure deployments challenges agencies to think strategically about C/AV investments and to develop solutions broad enough to be "future-proofed." This requires understanding of the some of the strategic issues raised in section 3.4 related to technology phasing and market penetration. For example, where is the convergence point at which market penetration and technological advances will allow increases in lane or roadway capacity, thus influencing expansion proposals?
- Region-specific prototype installations are recommended to assessing the opportunities and challenges of C/AV adoption. Pilot projects will help inform future analysis of investment decisions and allow agencies to cultivate their internal professional capacity. Agencies should plan and budget for technical development activities. As discussed in section 3.1, there are existing pilot deployments that will serve as a valuable resource. Partnerships with institutions of higher education can be helpful in developing training courses and tracking the progress of pilot deployments.
- The alternative of not investing in C/AV infrastructure and technology should be assessed (i.e., "do-nothing" alternative). Many safety and mobility benefits will potentially be delivered by automakers and third-party applications developers in the absence of public-sector investments. These applications will be limited to V2V applications, as States, MPOs, and local agencies will spearhead the deployment of V2I infrastructure. Public agency participation is likely to extend beyond transportation agencies, also including utility regulatory agencies, for example.
- Clear presentation of C/AV costs and benefit over the short and medium to long term is critical in gaining support from the public and stakeholders. For example, cost considerations should include both initial investments and ongoing O&M. Furthermore, agencies should clearly document the current limitations of cost estimates and build into their plans the ability to make cost estimate adjustments over time.
- Some planning agencies already have begun to incorporate C/AV into their long-range plans recognizing that there are unknowns but that recognition of impacts is important to planning investment priorities. The recently released Capital District Transportation Authority's 2040 Plan has a New Technologies section that specifically discusses Automated Vehicle Impacts and their

potential implications for future investment policy: "The potential for future increased capacity resulting from totally automated vehicles should be strongly considered in highway and bridge design. Designing a larger footprint to anticipate 2040 traffic conditions may be totally necessary if automated vehicles are fully established in the fleet by then. Designing a larger footprint that is unnecessary is not only prohibitively expensive but can work against the New Visions policies to encourage complete streets and demand management."

Step 6. Transportation Plan and Programming

As the MTP is developed, all technical data and methodologies used, as well as all references and other reports cited, should be clearly documented. The resulting MTP will document an investment strategy to meet performance targets to be funded over the next 20 years or more. The MTP provides direction to the transportation improvement program (TIP), a document that allocates or programs funding for specific projects over a four-year term. Important C/AV considerations relevant to this step include the following:

- In the narrative discussion that translates the plan to the program, agencies can cite emerging and planned short-term C/AV deployments also while explaining that applications, cost estimates, and technical capabilities are expected to change over time.
- Agencies should identify the short-term C/AV applications bundles that are ready to be programmed, along with applications that will be assessed in the future.
- The MTP should explain the importance of coordinating State and Federal investment, as C/AV technology, like most ITS technology, is more effective when networked rather than deployed in isolation.
- C/AV implementation plans should take advantage of the lessons learned and best practices from C/AV test beds and pilots, such as the goals and performance measures used, costs and funding, how pilot projects are programmed, deployment challenges, and institutional agreements. Furthermore, agencies should seek recommendations for recommendations of potential private-sector companies for C/AV products and services, such vehicle manufacturers, aftermarket products, and security management.
- Agencies should consider deploying C/AV technology when existing infrastructure and equipment are scheduled for upgrades or replacement. In the short term, C/AV technology will enhance the functionality of current ITS infrastructure. In the medium to long term, C/AV technology can be expected to supplement and/or replace applicable ITS infrastructure elements.

Step 7. Implement and Monitor

The final MTP step involves creating the implementation framework and monitoring progress towards plan vision, objectives, goals, and performance targets. This process includes analysis of performance data to inform future decisions about investment and priorities. Important C/AV considerations relevant to this step include the following:

- Given the multiagency/multijurisdictional nature of metropolitan areas, MPOs should clearly identify the responsibilities of stakeholders in infrastructure deployment and ongoing O&M.
- The effectiveness of C/AV deployments in meeting their objectives should be thoroughly documented along with costs and deployment best practices. This information is valuable and should be continually assessed over time. Local experiences should be shared with State and Federal parties as the nation's CV footprint emerges.
- As C/AV technology is rapidly improving, agencies should monitor technology developments and adjust the MTP and TIP accordingly. In particular, major capital investments in the MTP should be

revisited on a regular basis to identify how C/AV technology can be used to improve the effectiveness of these investments and whether the benefits and changes brought about by C/AV actually reduce or eliminate the need for these investments.

Example Projects: Various C/AV Applications

Major urban areas host the largest concentrations of both traffic and transportation infrastructure, and typically encompass larger, systemwide legacy ITS deployments. Consideration should therefore be given to the interaction and integration of C/AV applications with existing ITS. The potential impact of C/AV technology in urban areas is likely to be high relative to other types of transportation regions (e.g., rural), with a broad variety of C/AV applications expected to be applied. For this reason, the focus of the MTP example project will be on an urban arterial.

An MPO in a major urban area is considering a C/AV strategy to reach goals in the following areas:

- **Safety—**reduce vehicle-related injuries and fatalities;
- **Mobility—**decrease emergency vehicle response time;
- **Environment—**reduce vehicle emissions; and
- **Agency Data—**maintain and enhance the quality of pavement condition data.

The following C/AV applications are identified:

- In Pedestrian/Bicyclist in Signalized Crosswalk for Transit Vehicles (PSCWT), a pedestrian/bicyclist carries a portable DSRC and warns vehicles of potential conflict. Speed, location, and direction of travel are broadcast from smartphone and vehicle OBU. The RSU processes this data and sends warnings to users if a there is a potential conflict. If the RSU is interfaced with the signal controller, it also can transmit SPaT information to the vehicle OBU, so the driver will receive a warning if there is insufficient time to turn left.
- In Probe-Based Pavement Maintenance (PBPM), a driver's smartphone application would track vertical displacement, assess if it was a pothole, and send location and pothole size through the cellular network to a back office.
- In Emergency Vehicle Preemption (EVP), traffic signal controllers detect oncoming emergency vehicles and change desired directions to green lights.
- In Eco-Arrival and Departure at Signalized Intersections (EADSI), the RSU interfaces with a signal controller and broadcasts SPaT information. The vehicle OBU processes this data and suggests a speed to driver, allowing the driver to pass the next signal on green or to decelerate to a stop in the most eco-friendly manner.

This sample C/AV strategy is a medium- to long-term strategy, evolving a small-scale pilot to a large deployment. Table 5.5 summarizes the agency goals and desired performance of the corridor and compares traditional solutions to potential C/AV solutions.

Table 5.5 Summary of C/AV Potential Solutions for an Urban Arterial

Goal Areas	Desired Performance	Traditional Solution	Potential C/AV Solution
Safety: Reduce vehicle injuries and fatalities	Mitigate crashes on left turns between vehicles and pedestrians/bicyclists	Install protected left-turn signals	Pedestrian/Bicyclist in Signalized Crosswalk for Transit Vehicles (PSCWT)
Agency Data: Maintain pavement data	Capture real-time pavement condition so repairs can be expedited where necessary	Manual field survey of pavement	Probe-Based Pavement Maintenance (PBPM)
Mobility: Improve emergency vehicle response time	Allow system to dynamically respond to emergency vehicle needs	Emergency Vehicle Signal Priority	DSRC-based Emergency Vehicle Signal Priority (EVP)
Environmental: Reduce emissions	Promote greener driving behavior through signalized intersections	N/A	Eco-Arrival and Departure at Signalized Intersections (EADSI)

Source: Cambridge Systematics, Inc.

The C/AV infrastructure and applications will be deployed on an urban arterial section with the following existing characteristics:

- One lane in each direction with both transit bus and regular motor traffic;
- Painted center median with left-turn lanes;
- One buffered bicycle lane in each direction; and
- Signalized intersections with crosswalks.

There are intersections at every cross section, but the signal controllers vary between pretimed and actuated. Pretimed signals will cycle through both types of signal controllers automatically while actuated signals will cycle through the same direction until a pedestrian button is pressed or a vehicle is detected. The corridor is 10 miles long and, assuming one-half-mile spacing between intersections, there are 20 intersections.

Table 5.6 presents a preliminary high-level estimate of capital costs to deploy C/AV infrastructure, equipment, and applications. There will be DSRC RSUs installed at all intersections and in aftermarket OBUs on 30 emergency vehicles that frequently utilize the corridor. Pedestrians and bicyclists will receive upgrades to their smartphones to enable DSRC. Since there already are mobile applications similar to PBPM, software development costs will be low. The total budget detailed here for the C/AV strategy ranges from $3.1 million to $9.2 million. (There are other costs not captured here, such as annual operations and maintenance costs. See section 3.3 for an explanation of the deployment elements.)

Table 5.6 Preliminary Capital Cost Estimates for a C/AV Strategy

Deployment Element	Quantity	Per Unit Cost	Total Costs
DSRC RSU	100 intersections	$13,100-$21,200	$131,000-$2,120,000
Signal controller upgrade	100 intersections	$3,200	$320,000
Backhaul communications	100 intersections	$3,000-$40,000	$300,000-$4,000,000
Emergency Light Vehicle OBU	200 vehicles	$4,700	$940,000
Mobile Device Upgrade (enables DSRC)	100 pedestrians and bicyclists	$300	$30,000
PBPM mobile application development	1 application	$200,000	$200,000
C/AV Project Total	–	–	**$3,100,000-$9,220,000**

Source: Cambridge Systematics, Inc.

5.5 Transportation Asset Management Plan (State)

A transportation asset management plan (TAMP) contains an inventory of transportation system assets and conditions, along with the management strategies to maintain or improve asset conditions and system performance. Each State is required to develop a risk-based asset management plan for the National Highway System (NHS). Asset management uses engineering and economic analysis to identify maintenance and rehabilitation actions to achieve a state of good repair for the life of the assets. Risk-based TAMPs factor in risk at some point in the asset management process, such as through risk and tradeoff analyses.

The elements of a risk-based TAMP include the following:

1. Asset Inventory and Condition. Summarize the inventory of pavement bridge assets on the NHS in the State and their condition; assess historic condition information, current and future traffic volumes, and new assets being built as part of a capital expansion program.
2. Objectives and Measures. Define objectives of the asset management program, levels of service and measures, and short-term and medium- to long-term condition targets.
3. Performance Gap Assessment. Define planning horizons and forecast demand; identify the gap between existing conditions and future conditions.
4. Alternative Investment Plans. Use life-cycle cost and risk assessment analysis to develop alternative investment plans; define both programmatic and system risks.
5. Financial Plan. Identify funding sources and forecast funding levels over the short and medium to long term; analyze implications of various funding levels in terms of asset valuation and financial sustainability.
6. Investment Strategy. Compare investment plans and develop a fiscally constrained investment strategy.

TAMP Elements and the Role of C/AV

One of the important roles of C/AV in the TAMP will be to enable the collection of real-time system information, including both traffic and infrastructure conditions. Real-time monitoring of traffic conditions and infrastructure deterioration will allow agencies to better understand materials performance, rapid repair techniques, and associated maintenance activities.

Below, the role of C/AV is examined in more detail within the framework defined above. A summary of each element is provided, followed by a discussion of how to incorporate C/AV and its potential impact.

Element 1. Asset Inventory and Condition

In the first element of the risk-based TAMP, the DOT develops an inventory and condition assessment of a State's transportation system. As part of this inventory and assessment, agencies should summarize, at a minimum, the condition of all bridges and pavements on the NHS. The assessment also may include historic condition information, current traffic volumes and future traffic projections, and a list of new assets being built as part of a capital expansion program. C/AV considerations relevant to this step include the following:

- C/AV technology enables the collection of real-time system information regarding both traffic and infrastructure conditions from probe vehicles. Current pavement condition data is largely collected by specially outfitted vehicles and manual inspection. CV applications provide a potential alternative by tapping into the accelerometers native to vehicles and smartphones. Michigan DOT has tested this functionality by collecting accelerometer data on a fleet of agency vehicles, with results showing substantial potential. More details are discussed in the next section of this report.
- In the short term, CV applications will reside on agency vehicles and can supplement existing data collection methods. Over the medium to long term, as market penetration of CV technology for the traveling public increases, crowdsourced data collected from the public can potentially replace existing data collection methods.
- States accustomed to scheduled inspection cycles will have to update existing methods or create new methods to manage and effectively use the continuous data from C/AV applications.

Element 2. Goals and Measures

This element includes developing or updating objectives, measures, and targets for the asset management program. Objectives are high-level statements about the asset management process or strategies that frame the TAMP's purpose. Measures are defined to meet objectives; they track the performance and condition of the transportation assets. For each measure, the short- and medium- to long-term targets should be realistic. As part of this process, public input should be incorporated based on the result of customer surveys and other means of soliciting information. C/AV considerations relevant to this step include the following:

- In order for the traveling public to participate in the C/AV environment (e.g., provide condition data), agencies should clearly explain the technology and its benefits as well as address any concerns relating to matters such as privacy of data from individual automobiles and security. Opt-in agreements may be required, similar to those on many traffic applications. Automobile industry manufacturers and suppliers should be involved in addressing these concerns.
- C/AV technology can potentially reduce the cost of collecting asset management data and allow enable real-time condition. This will provide the opportunity for agencies to identify poor

performing assets earlier and take proactive actions. However, a potential concern is the ability to report real-time conditions may heightened the traveling public's expectations regarding agency responsiveness. The requests for quick repairs may take resources away from medium- to long-term rehabilitation needs (e.g., covering potholes as oppose to repaving), potentially affecting both short-term and medium- to long-term condition targets. Planning agencies also can play a role in communicating to the public that faster identification of issues does not guarantee rapid response, which is still a function of available resources.

Element 3. Performance Gap Assessment

This element includes defining the planning horizons, forecasting demand, and identifying the gaps between existing conditions and future conditions. This assessment begins with a definition of the short- and medium- to long-term planning horizons and a description of traffic trends and forecast demands on the system during these horizons. Agencies then present an analysis of future funding versus condition scenarios. After conducting this analysis, agencies illustrate the performance gap between existing condition levels and future condition levels. C/AV considerations relevant to this step include the following:

- The continuous collection cycle potentially offered by C/AV technology allows gap assessment to be performed more frequently, or even on an ongoing basis, enabling dynamic adjustment for changing traffic patterns. Forecasting assumptions and models will need to be updated accordingly. New tools will be needed to process large amounts of data from individual vehicles, identify patterns, and create actionable information.
- During the transition period from manual data collection to probe data collection, agencies should be aware of gaps that may occur between these two datasets. It is likely that some funding will be needed to continue manual methods for some time, in order to create a baseline.

Element 4. Alternative Investment Plans

For the fourth element of the plan, agencies use life-cycle cost and risk assessment analysis to develop alternative investment plans. As part of the first substep—life-cycle cost considerations—agencies define life-cycle costs and explain their importance. This process includes detailing how the agency manages its assets from inception to disposal, including construction, maintenance, preservation, rehabilitation, improvement, and reconstruction. Agencies also should describe the methodology used to address these life-cycle costs in the plan.

C/AV considerations relevant to the life-cycle analysis substep include the following:

- Asset management probe data will be collected from devices on vehicles that will be provided by automobile manufacturers and suppliers or aftermarket companies. In terms of asset management, public agencies will be concerned primarily with the roadside equipment that will collect that data, as well as the back-office processing and data management services. Agencies should plan for the likelihood that CV equipment and related systems will improve rapidly, particularly in the early stages of development, and may require replacement sooner than most ITS equipment.
- As C/AV cost estimates are only preliminary, there is a level of uncertainty in calculating life-cycle costs. It is important that deploying agencies track operations and maintenance costs so that the life-cycle costs of future deployments can be projected with greater confidence. Planning agencies should track these costs as well, in order to evaluate alternative investments for the TIP.

- New tools and personnel will be needed to process and analyze the large amount of probe data provided by on-board devices. Even if third parties perform this work, planning agencies will need to have a basic understanding of the process and the ability to assess the reliability and quality of the information provided.

Agencies begin the risk management analysis substep by defining key *programmatic* risks associated with implementation of the plan (e.g., cost escalations, budget cuts, and environmental delays). Next, agencies define *system* risks that could adversely affect the transportation system (e.g., asset failure and external events such as floods, earthquakes, and hurricanes). After conducting the risk management analysis, agencies should provide a map showing the NHS assets most at risk and include a register that provides the following for each programmatic risk: likelihood of occurrence, consequences of occurrence, and mitigation activities. C/AV considerations relevant to the risk management analysis substep include the following:

- Agencies should identify risks associated with various technological options and investments related to asset management data collection and analysis. Rapid changes in technology require agencies to keep up with developments and share experience through peer exchanges and other communications methods.
- Because C/AV technology permits the collection of real-time system information (including both traffic and infrastructure condition), it will allow a more indepth and accurate picture of the likelihood and consequences of an asset being taken out of service (for example, due to deterioration).

Element 5. Financial Plan

The fifth element of the plan is the financial plan, which begins with a summary of historic funding levels for asset management. Agencies then define the amount of funds expected to be available for the asset management program, describe where the funds will come from, and explain how these funds will be allocated in the short term and medium to long term as part of the respective planning horizons. Agencies should then determine the current value of assets and describe the implications of various funding levels in terms of asset valuation and financial sustainability. C/AV considerations for the financial plan are analyzed in section Case Study #11.

Element 6. Investment Strategy

In the final element of the plan, agencies outline the asset management investment strategy. The strategy should describe the best investment strategies for operations, maintenance, replacements, and improvement resulting from the analyses in previous steps. This description includes average unit costs, typical timing for when each strategy should be considered, and/or a description of how asset management projects are prioritized and programmed. C/AV considerations relevant to this step include the following:

- Real-time monitoring of traffic conditions and infrastructure deterioration allows for better understanding of materials performance, rapid repair techniques, and associated maintenance activities.
- State-specific prototype installations are a recommended resource for assessing the opportunities and challenges of C/AV adoption, such as comparison of the data accuracy between manual and probe-based collection methods.

Example Project: Probe-Based Pavement Maintenance

State DOTs collect pavement condition data for the U.S. DOT Highway Performance Monitoring System. Most agencies collect data through both visual surveys and driving vehicles with surface profile measurement equipment. The data is collected on back-end services and the analysis informs maintenance and refurbishment strategies. Performance categories include surface distress (e.g., rutting and cracking) and ride quality (e.g., international roughness index). This time-consuming and expensive process is usually done once every few years.

As part of the U.S. DOT Connected Vehicle Research Program, Michigan DOT's Data Use Analysis and Processing (DUAP) project evaluated the uses and benefits of CV data in transportation agency management and operations. As noted in the previous section, one of the research focus areas evaluated the use of probe vehicles to collect pavement data, with the results showing substantial potential. Figure 5.1 provides an overview of the methodology and results.

Michigan DOT has continued these efforts and concluded that new CV databased pavement condition metrics could be used in the TAMP in the next three to five years.

Many agencies have started supplementing agency data with reports that system users make through mobile applications and Web sites. Boston currently is testing a mobile smartphone application that automatically collects pothole data. Using the mobile smartphone's accelerometer and GPS, vertical displacements are collected and sent to a back-end server for analysis. Ultimately, for crowdsourced data to be a viable replacement for current methods, there be a critical mass of users and adequate system coverage.

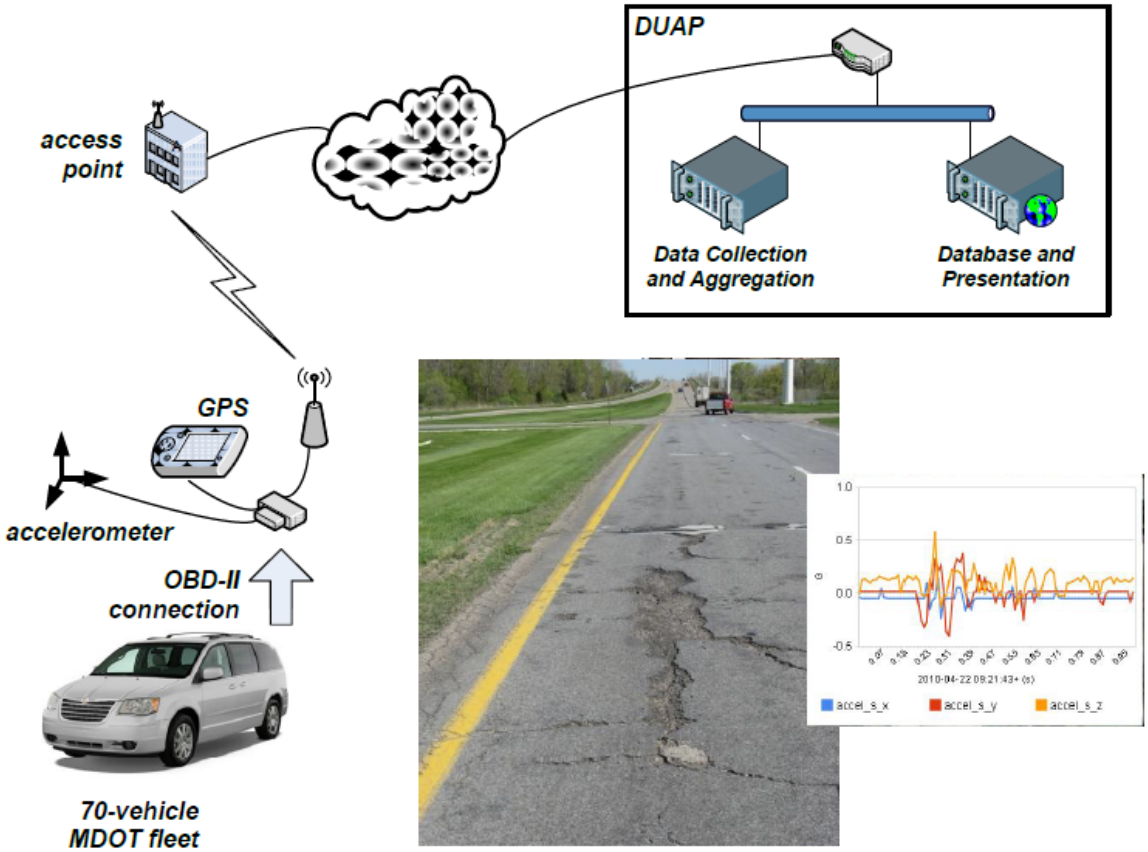

Figure 5.1 Graphic. Michigan DOT DUAP Pavement Accelerometer Test and Results
(Source: Vehicle Infrastructure Integration (VII) Data Use Analysis and Processing, Project Summary Report, page 30)

The TAMP example project provides a preliminary cost estimate for the deployment of PBPM. The project's timeframe is three years, a duration that reflects typical engineering practices for collecting new types of data, and a process that requires time to develop a baseline condition and establish trends on which decisions can be based. Also relevant is the impact of CV market penetration rates on data quality. One study has estimated that a market penetration rate of at least 1 percent would be necessary to provide adequate condition monitoring.

Table 5.7 presents a high-level preliminary cost estimate to deploy and pilot C/AV infrastructure, equipment, and PBPM application. Since this is a cellular-based application, there is no DSRC infrastructure. Aftermarket OBUs will be installed into agency-owned vehicles. The total cost of the project is $123,000. (There are other costs not captured here, such as acquiring resources to store and analyze the data. See section 3.3 for an explanation of the deployment elements.)

Table 5.7 Preliminary Cost Estimate for PBPM

Item	Quantity	Per Unit Cost	Total Costs
Smartphone	30 users	$500	$15,000
Cellular Data Plan ($50 per month)	3 years	$600	$1,800
PBPM mobile application development	1	$100,000	$100,000
PBPM mobile application support	30 users	$200	$6,000
C/AV Project Total	–	–	**$122,800**

Source: Cambridge Systematics, Inc.

The goal is to test the PBPM application and explore the potential to enhance existing pavement collection efforts. The new data source is compared to existing methods (e.g., visual survey and vehicle surface profilers) to evaluate its ability to identify poor pavement performance.

5.6 Strategic Highway Safety Plan (State)

The Highway Safety Improvement Program (HSIP) was established to significantly reduce the number of transportation-related injuries and fatalities on all public roads. The Strategic Highways Safety Plan (SHSP) is a major component of the HSIP. The Safe, Accountable, Flexible, Efficient Transportation Equity Act—A Legacy for Users (SAFETEA-LU) established the HSIP as a core Federal program and required all States to develop and implement a SHSP. MAP-21 continued the program and added the requirement that States evaluate and update an SHSP.

An SHSP identifies a State's greatest safety needs and guides investment decisions regarding those strategies and countermeasures with the most potential to save lives and prevent injuries. It is a data-driven, multiyear comprehensive plan that establishes statewide goals, objectives, and key emphasis areas and integrates the four “E”s of highway safety—engineering, education, enforcement, and emergency medical services. States should evaluate and update their SHSPs in a five-year cycle.

The essential elements of the SHSP are the following:

1. **Leadership and Vision.** Identify personnel to lead the development effort and relevant stakeholders to involve in the process of developing a vision of the SHSP. Establish an organizational structure and collaboration framework.
2. **Data Collection and Analysis.** Analyze available data to identify critical highway safety issues and safety improvement opportunities. Identify mechanisms and improvement strategies for data sharing, accuracy verification, and analysis methods.
3. **Emphasis Areas**. Develop emphasis areas based on data analysis and input from stakeholders representing the four “E”s of safety. For each emphasis area, establish goals and measurable objectives along with performance measures.
4. **Strategies and Countermeasures.** Develop strategies to achieve goals and countermeasures to support and implement strategies, while incorporating funding considerations. Evaluate and select preferred strategies and countermeasures.

5. Action Plans. Identify specific action steps for each countermeasure, assign responsibility to stakeholder(s), and document time lines.
6. Implement and Evaluate. Document implementation approach and evaluation methods. Evaluate the extent to which the SHSP is achieving its goals and objectives. Improve existing programs and develop new programs.

SHSP Elements and the Role of C/AV

One of the important roles of C/AV in the Strategic Highway Safety Plan will be introducing cost effective data sources and collection methods. Supplemental crash, traffic, and vehicle data may eventually be collected by C/AV technology. Additionally, certain types of crashes may be reduced over time as various V2I safety applications are adopted in vehicles. In the medium to long term, C/AV technology may eliminate most crashes, allowing significant reductions in investments related to safety and capacity.

Below, the role of C/AV is examined in more detail within the framework defined above. A summary of each element is provided, followed by a discussion of how to incorporate C/AV and its potential impact.

Element 1. Leadership and Vision

In the first element of the SHSP, the agency identifies personnel to lead the development effort and relevant stakeholders to involve. Stakeholders can include engineers, law enforcement personnel, emergency responders, outreach professionals, and other safety personnel. The group's leadership will establish an organizational structure, collaboration framework, and a vision that will guide the remainder of the plan. C/AV considerations relevant to this element include the following:

- The agency should identify and/or train staff who are knowledgeable about C/AV safety applications and can engage both public and private stakeholders. Leadership support generally comes from the State DOT, State Highway Safety Office or Governor's Highway Safety Office (SHSO/GHSO), State Commissioners, etc. Leadership also can use the existing FHWA Roadway Safety Professional Capacity Building Program to increase staff knowledge, skills, and abilities regarding C/AV safety applications.
- Implementation of C/AV-related safety investments may need the involvement new stakeholders such as private companies to provide C/AV equipment and services. Furthermore, a higher level of cooperation may be needed between existing stakeholders, specifically between the government (policy, traffic engineering, parking management, maintenance) and MPO member municipalities.
- There should be discussion among existing and new stakeholders on the potential of C/AV investments to achieve the vision of the SHSP. Furthermore, the medium- to long-term impact of C/AV can change the nature of the vision itself. For example, fully automated vehicles can prevent accidents without driver interaction, which may remove the need to focus on distracted drivers.
- The public and other stakeholders should be provided with a clear presentation of the nature, benefits, and objectives of C/AV technology in order to gain their support. States should have an understanding of current and future challenges and ongoing research initiatives in order to answer questions and address concerns that the public and stakeholder community may have.

Element 2. Data Collection and Analysis

The second element of the plan involves the collection and analysis of safety data. All elements of the plan's process, from development to evaluation, require States to analyze and make effective use of State, regional, local and tribal safety data. The types of data generally used to support the development of the plan include crash, injury surveillance, roadway and traffic, vehicle, driver, and law enforcement data. States should analyze the available safety data to identify critical highway safety issues and safety improvement opportunities. The analysis is used to develop emphasis area goals, objectives, and strategies and action plans; monitor and evaluate results; and provide feedback for future updates to the SHSP. C/AV considerations relevant to this element include the following:

- A major role of C/AV technology will be to introduce cost effective data sources and collection methods. This can include in the short term, baseline information will continue to be collected by traditional methods. Over the medium to long term, C/AV technology can supplement and replace existing sources and methods. Section 4.0 provides more examples of potential C/AV data collection applications.
- C/AV technology also can collect new data that were previously unavailable or difficult to collect. For example, near-crashes can be reported which can help agencies proactively identify trouble location.
- Staff should consider the potential needs created by C/AV investments, particularly the resources needed to store and analyze the increased volume of data generated by C/AV applications. As noted in section 3.0, policies and regulations related to data availability and usage should be tracked by agencies wishing to use the data. Planning agencies may play a role in influencing related laws, policies, and regulations.
- Staff should identify C/AV-related investments (applications and deployment locations) that would optimize safety benefits and track the progress of the C/AV safety-related applications tested in pilot programs either planned or underway in Michigan, Florida, California, Nevada, Virginia, Texas, and other States.

Element 3. Emphasis Areas

The next element of the SHSP process entails defining emphasis areas, which are types of crashes for which there exists a particular safety problem. Data analysis is used to discern trends in the frequency of certain types of crashes (e.g., rear-end collisions, lane departures, impaired driving), and crash type data are used to identify SHSP emphasis areas with input from stakeholders. By identifying and describing safety problems quantitatively, States know the magnitude of the problem and can focus efforts on areas with the greatest potential to improve safety. C/AV considerations relevant to this element include the following:

- Emergency response applications can serve as effective early deployments of C/AV technology. Emergency vehicles equipped with DSRC technology, for example, could communicate with roadside units to obtain information on traffic conditions at upcoming intersections. Working with first responders is a way to engage a wider audience beyond transportation agencies and build public support for broader deployments. RSU instrumentation plans should include input (both qualitative and quantitative) from first responders. RSU deployment should be prioritized at appropriate levels in the LRTP and TIP.
- C/AV applications, such as curve speed warnings and vehicle warnings for drivers to reduce speed in a work zone, have the potential to reduce certain types of crashes such as those related to speed. Agencies should track the progress of the Safety Pilot Program in Michigan for the latest

information on C/AV safety benefits. The CSW application is described in more detail in the example project.

- In the medium to long term, C/AV technology may result in a large reduction in crashes, reducing the resources required for incident management and freeing them for use to meet other safety goals and objectives. In planning medium- to long-term projects, planning agencies need to consider how these changes will impact project prioritization.

Element 4. Strategies and Countermeasures

The fourth element of the plan involves the development of strategies and countermeasures. Analysis of safety data helps managers to select and prioritize strategies and countermeasures. Strategies and countermeasures are behavioral and infrastructure tactics that effectively reduce highway fatalities and serious injuries. High priority should be given to those strategies and countermeasures that could significantly reduce highway fatalities and serious injuries in the key emphasis areas. Consideration also should be given to systemic safety improvements, which address high-risk roadway features that are correlated with specific severe crash types, rather than crash frequency. C/AV considerations relevant to this element include the following:

- Agencies should actively educate stakeholders and the public to ensure that "safety complacency" does not occur, as C/AV systems will not be foolproof.
- In the short term, V2I infrastructure can be installed to provide dynamic roadside warnings at high-crash locations through various types of electronic signing. In the medium to long term, as C/AV market penetration matures, safety warnings can potentially be sent directly to vehicles and/or be integrated with automated driver functions. Furthermore, fully automated vehicles that utilize both sensors and safety warnings can recognize safety hazards and adjust their actions accordingly. Through this transition to a mature CV environment, agencies will still need to plan for the presence of vehicles without CV technology, utilizing traditional methods such as static warning signs.
- Agencies should identify existing infrastructure that needs to be upgraded or integrated in order to support C/AV safety applications. For example, signal controllers may need to be standardized in order to communicate with DSRC RSUs and/or with pedestrians and cyclists via smartphone.
- Agencies should foster realistic expectations for short-term impacts of C/AV applications, as initial applications will be modest in terms of scope, geography, and capabilities. In the medium to long term, C/AV is expected help States meet more ambitious goals and objectives. For example, NHTSA estimates that V2I and V2V systems can potentially address up to 81 percent of vehicle crashes.

Element 5. Action Plans

The fifth element of the SHSP involves the creation of action plans. Action plans create a link between the goals and objectives of the SHSP and the prioritization and selection of projects within existing transportation planning and programming activities (e.g., S/TIPs). Agencies create action plans for each emphasis area identifying specific action steps required for each countermeasure, the responsible agency or agencies, and implementation timelines. Action plans also should provide details regarding how to implement each countermeasure, such as measurable objectives, performance measures, strategies, action steps, tracking measures for action steps, and funding sources. C/AV considerations relevant to this element include the following:

- Projected changes and safety improvements from C/AV applications can be refined as more pilot projects, field tests, and actual deployments occur and impact evaluations are reported.

- Leadership should recognize that flexibility is needed in development of action plans for C/AV deployment since both the technology and estimates of market penetration levels will change. How well the technology performs in meeting goals, objectives, and measures should be continually reevaluated.
- Action plans should identify the skills needed to implement C/AV, from planning to design to deployment. Agencies that partner with private-sector stakeholders may be required to acquire expertise in areas such as communications, security, and data management. This topic is addressed as part of Task 5 (Skills and Training Needs) of this project.

Element 6. Implement and Evaluate

The final element of the SHSP is to implement and evaluate the plan. There are several critical components of successful SHSP implementation. These include creating emphasis area teams and action plans, integrating the SHSP with existing transportation safety plans, and marketing the plan. States also are required to evaluate their SHSPs on a regular basis to ensure the accuracy of the data and priority of proposed strategies. Evaluation enables States to maintain an SHSP process that is open to continuous examination, change, and improvement. It includes establishing continual monitoring and feedback to track progress and communicate results. C/AV considerations relevant to this element include the following:

- In order to motivate future C/AV-related safety investment, it critical to evaluate how effectively C/AV investments support safety targets, both directly (installing infrastructure) and indirectly (collecting data).
- Impacts of C/AV technology on major medium- to long-term investments will increase as market penetration of C/AV technology and users matures. Reduced crash rates and roadway capacity requirements could impact the benefit-cost ratios of medium- to long-term high-cost capital investments such as new fixed-rail transit lines and new/expanded freeways. Given the uncertainties in technology adoption and timing, agencies should, as part of the alternatives analysis process, analyze different scenarios and conduct a more rigorous level of risk analysis than in the past, including alternative economic and land use assumptions. These assumptions should be revisited on a regular basis as C/AV technologies advance.
- State-specific prototype installations that incorporate safety components are a recommended resource for assessing the opportunities and challenges of C/AV adoption, as well allowing agencies to cultivate their internal professional capacity. Agencies should plan and budget for technical development activities. Partnerships with institutions of higher education can be helpful in developing training courses and tracking the progress of pilot deployments.
- While data on the capital, operations, and maintenance costs of C/AV is available, it is preliminary. As an emerging technology, C/AV has costs that are subject to change due to such factors as geography, vendor product differentiation, and software options. As the technology is produced in larger volumes, costs will decrease. Agencies should understand the current limitations of cost estimates, track ongoing deployments, and build into their plans the ability to make cost estimate adjustments over time.

Example Project for SHSP (State)

Safety is the primary consideration goal of U.S. DOT connected vehicle research. DSRC communications is critical for safety applications that require low latency and high reliability. Short-term V2I applications will provide driver alerts about matters such as work zones, high crash locations, pedestrian presence, etc. These applications exchange safety and operational data between vehicles and roadway infrastructure to avoid and mitigate crashes.

Current Curve Speed Warning (CSW) systems use DMS and radar that display warnings to drivers when their travel speeds exceed safety thresholds. CV technology can potentially integrate data from the infrastructure (e.g., slippery road surface condition) and vehicle to deliver more accurate and robust warnings to drivers through an in-vehicle display. U.S. DOT has released a Concept of Operations on CSW (and other V2I safety applications) describing the user needs, benefits, and operational scenario in detail. (See the example project for section 5.2, Regional ITS Architecture, for a related discussion on CV-based DMS.)

California Partners for Advanced Transit and Highways (PATH) have conducted preliminary tests on a prototype CSW application. Results showed that the system was able to integrate vehicle sensor, digital map, and GPS information and provide appropriate warnings when speeds were too high.

Table 5.8 presents a high-level estimate of the capital costs to deploy C/AV infrastructure, equipment, and CV CSW. DSRC RSUs will be installed along 10 curves with high crash rates and aftermarket OBUs will be installed on each of the 30 agency vehicles. The total cost of the project is from $461,000 to $1.1 million. (There are other costs not captured here, such as annual operations and maintenance costs. See section 3.3 for an explanation of the deployment elements.)

Table 5.8 Preliminary Cost Estimates for CV CSW

Item	Quantity	Per Unit Cost	Total Costs
DSRC RSU	10 curves	$13,100-$21,200	$131,000-$212,000
Backhaul communications	10 curves	$3,000-$40,000	$30,000-$400,000
Light Vehicle Aftermarket OBU	30 vehicles	$10,000	$300,000
C/AV Project Total	–	–	**$461,000-$1,073,000**

Source: Cambridge Systematics, Inc.

When piloting the CV CSW application, the project timeframe should be long enough to allow an adequate sample of data to be collected and analyzed. Then the CV CSW data would be compared with conventional CSW data to gauge its ability to provide accurate information in a timely manner and motivate speed compliance.

In the short term, CV will supplement current static and radar-based signs. In the medium to long term, as CV technology reaches market penetration, the traveling public will receive in-vehicle warnings, making physical signs obsolete. Infrastructure deployed during this transition should continue to support the safety needs of unequipped vehicles. Furthermore, as AV technology improves over the medium to long term, fully automated vehicles will utilize both on-board sensors and DSRC alerts and adjust the vehicle speed accordingly.

5.7 State Implementation Plan

The Clean Air Act requires each State to develop a State Implementation Plan (SIP), a general plan for attaining and maintaining the National Ambient Air Quality Standards (NAAQS). An infrastructure SIP demonstrates that States have the basic air quality management program components in place to meet the NAAQS. Three years after promulgation of a new or revised NAAQS, States must develop an infrastructure SIP with public input and submit it to the Environment Protection Agency for approval.

An infrastructure SIP must address the following subset of key elements:

> **1. Enforceable Emissions Limitations.** Identify provisions (emissions limits and other control measures) that limit pollutant emissions relevant to the subject NAAQS.
> **2. An Ambient Monitoring Program.** Establish and describe the system and methods to monitor data on ambient air quality.
> **3. Personnel, Resources, and Legal Authority.** Identify the organizations that will carry out the provisions to implement the NAAQS, along with the personnel and funding sources.

The key infrastructure SIP elements listed above are those on which C/AV may have a potential impact.

SIP Elements and the Role of C/AV

One of the important roles of C/AV in the SIP process will be to enable users to utilize the transportation system in a more environmentally efficient manner. Additionally, mobile emissions monitoring data may become available as the technology is developed.

Below, the role of C/AV is examined in more detail within the framework defined above. A summary of each element is provided, followed by a discussion of how to incorporate C/AV and its potential impact.

Element 1. Enforceable Emissions Limitations

The first element of the SIP involves the establishment of enforceable emissions limitations. In the SIP, the State must include enforceable emission limitations and other control measures, means, or techniques (including economic incentives such as fees, marketable permits, and auctions of emissions rights). Agencies also must produce schedules and timetables for compliance with these emissions limits. C/AV considerations relevant to this element include the following:

- Agencies should keep track of, and participate in, the U.S. DOT's Application for the Environment: Real-Time Information (AERIS) Program. The program is researching C/AV application bundles that focus on collecting real-time data to create actionable information to facilitate "green" transportation choices.
- In the short term, C/AV technology will enable users to utilize the transportation system in a more environmentally efficient way (e.g., EADSI, dynamic eco-routing, smart truck parking). Over the medium to long term, sufficient environmental data can potentially allow the large portions of the traffic system to be optimized. Using real-time data from vehicles (e.g., vehicle location and emissions data), dynamic signal timing strategies can be implemented to optimally serve the actual traffic demands while minimizing the environmental impact.

- Agencies should identify existing infrastructure that should be upgraded or integrated in order to support C/AV applications. For example, signal controllers may need additional software or other upgrades in order to communicate with DSRC RSUs.

Element 2. Ambient Monitoring Program

The second element of the SIP pertains to the establishment and/or operation of an ambient air quality monitoring/data system. Agencies must provide for the establishment and operation of the devices, methods, systems, and procedures necessary to monitor, compile, and analyze data on ambient air quality. Additionally, agencies must make these data readily available to the EPA. C/AV considerations relevant to this element include the following:

- Agencies should assess the impact of C/AV solutions on air quality by establishing methods to collect and analyze data. The AERIS program is researching how to collect performance measures data on fuel use and emission reductions.
- Mobile emissions monitoring data will become available as the technology is developed. This means of data collection will likely supplement fixed-location monitoring devices to provide a more complete picture of air quality in a given area. Agencies should begin considering the policies and data infrastructure needed to capture and store the increase volume of data.

Element 3. Personnel, Resources, and Legal Authority

The final element of the SIP relates to personnel, resources, and legal authority. States must provide assurances that the State or appropriate local governments/regional agencies designated by the State will have adequate personnel, funding resources, and authority under State (and, as appropriate, local) law to carry out the implementation plan. In cases where the State has relied on a local or regional government or agency for the implementation of any plan provision, the State has responsibility for ensuring adequate implementation of such plan provision. C/AV considerations relevant to this element include the following:

- Agencies should identify the private and public organizations that can pilot C/AV deployment for the purposes of reducing emissions. Potential collaboration partners include freight truck companies and drivers, transit agencies, construction companies, and public agency maintenance vehicles fleets.
- The State should emphasize coordinating with local investment, as C/AV technology, like most ITS technology, is more effective when networked and coordinated with other applications, rather than deployed in isolation. For example, data on multiple applications, including air quality, traffic conditions, and pavement conditions will probably be obtained more cost effectively if communications, processing, and data management activities are coordinated. Furthermore, State and local agencies should pool and share resources, such as personnel and funds, when considering C/AV investments.

Example Project: EADSI

The U.S. DOT's Application for the Environment: Real-Time Information (AERIS) program is researching C/AV application bundles that focus on collecting real-time environmental data to create actionable information to facilitate "green" transportation choices.

The AERIS program has developed operational scenarios. Within the scenarios are bundles of applications. The Eco-Arrival and Departure at Signalized Intersections (EADSI) is part of the Eco-Signal Operations scenario. EADSI has been the subject of the most research progress to date and is

practical to implement in the short term. In this application, SPaT information is used to provide speed advice, allowing the driver to adapt in order to pass the next signal on green or to decelerate to a stop in the most eco-friendly manner.

The cost and benefits of implementing the EADSI application in the SIP development context are explored. The EADSI application collects SPaT and Geographic Information Description, determines the optimal speed to pass the next traffic signal on a green light or to decelerate to a stop in most eco-friendly manner, and provides that recommendation to the driver on a visual interface.

There are non-DSRC methods for vehicles to receive SPaT data both in development and deployment. The "EnLighten" smartphone application uses crowdsourcing to predict signal changes and provide drivers with a visual countdown, for example. These other methods have difficulty with flexible time signals (e.g., actuated, adaptive, or signal preemption), however. Since DSRC methods would request real-time data from the signal itself, it may be better suited to overcome this challenge.

Table 5.9 presents a high-level estimate of the capital costs to deploy C/AV infrastructure, equipment, and EADSI applications. DSRC RSUs will be installed at each of the 10 intersections and aftermarket OBUs will be installed on each of the 20 agency vehicles. Each intersection will require a signal controller and backhaul upgrade. The total budget of this project from $393,000 to $1.4 million. (There are other costs not captured here, such as annual operations and maintenance costs. See section 3.3 for an explanation of the deployment elements.)

Table 5.9 Preliminary Cost Estimate for EADSI

Item	Quantity	Per Unit Cost	Total Costs
DSRC RSU	10 intersections	$13,100-$21,200	$131,000-$212,000
Signal controller upgrade	10 intersections	$3,200	$32,000
Backhaul communications	10 intersections	$3,000-$40,000	$30,000-$800,000
Light Vehicle OBU with graphic interface	20 vehicles	$10,000	$200,000
C/AV Project Total	–	–	**$393,000-$1,405,000**

Source: Cambridge Systematics, Inc.

As described in this example, short-term C/AV technology will enable users to utilize the transportation system in a more environmentally efficient way. Over the medium to long term, C/AV technology can potentially enable the system itself to be optimized. Potential impacts include reduced idling and stops, unnecessary accelerations/decelerations, and improved traffic flow.

5.8 Transit Development Plan (MPO and Transit Agencies)

A transit development plan (TDP) analyzes the existing system and the investments needed to meet future needs. There are no Federal requirements for a TDP.

Some local/regional transit agencies develop TDPs to meet State requirements. For example, Virginia Department of Rail and Public Transportation (DRPT) requires every public transit operator receiving State funds to develop a TDP every six years. Other local/regional transit agencies develop TDPs for their own needs. For example, in Wisconsin, the Southeastern Wisconsin Regional Planning Commission has developed TDPs for local/regional transit service providers at their request.

The Virginia DRPT provides a TDP guide describing the required chapter structure. Pursuant to these guidelines, the key elements of a TDP can include the following:

1. **Overview of Transit System.** Provide a brief overview of the transit system, ITS program, and public outreach.
2. **Goals, Objectives, and Standards.** Establish and describe goals, objectives, and performance standards.
3. **Service and System Evaluation.** Evaluate route-level and systemwide performance against current performance standards for each mode and/or type of service.
4. **Service Expansion Project Descriptions.** Summarize each proposed service expansion project, including estimates of ridership, cost, and funding.
5. **Operations Plan.** Describe the fixed route and demand response services the operator intends to provide over the plan period.
6. **Capital Improvement Program.** Describe the capital programs required to carry out the operations and services set out in the operating plan.
7. **Financial Plan.** Develop a financial plan consisting of the capital and operating budget forecast; Federal, State, and local revenue projects; fare policies; and other financial information.
8. **Monitoring and Evaluation.** Describe the process to monitor and evaluate progress towards implementation of plan.

TDP Elements and the Role of C/AV

One of the important roles of C/AV in the Transit Development Plan will be to enhance transit data and support service reliability and safety goals.

Below, the role of C/AV is examined in more detail within the TDP framework defined above. A summary of each element is provided, followed by a discussion of how to incorporate C/AV and its potential impact.

Element 1. Overview of Transit System

In the first element of the TDP, transit agencies provide a brief overview of the system, ITS program, and public outreach program. The system overview should describe the transit services provided, vehicle fleet, and existing facilities. The ITS program can include any technology projects intended to improve efficiency and operations, such as Transit Signal Priority (TSP). The public outreach overview should describe how the agency provides opportunities for public comment. C/AV considerations for this element include the following:

- When reviewing the transit system, the agency should assess which transit corridors would be suitable for C/AV technology and identify existing vehicles and facilities that would require upgrades in order to communicate with the C/AV environment. Collaboration with other public agencies may be needed if they own certain facilities or roadside equipment, such as bus stops and the power supply.
- The agency should identify and/or train staff who are knowledgeable about C/AV technology. In order to gain support from the public and within the agency, staff should clearly present information about C/AV technology, benefits, and objectives of enabling a connected vehicle environment. Staff also should understand the challenges of C/AV planning and implementation and ongoing research initiatives in order to respond to concerns that the public and internal stakeholders may have.

Element 2. Goals, Objectives, and Standards

For the second element, agencies define their goals, objectives and standards. Goals and objectives should address all major areas of concern for transit agencies, including service reliability, safety, and multimodal connectivity. Performance standards should be specific and quantifiable and address the efficiency and effectiveness of transit service. C/AV considerations relevant to this element include the following:

- Agencies should identify how C/AV technology can support the defined objectives and goals, along with how to measure the performance. In the short term, C/AV applications can potentially help agencies support service reliability and safety goals and objectives. In the medium to long term, C/AV applications can potentially help achieve more ambitious goals and objectives.
- Potential C/AV applications for transit include TSP and PSCWT. In TSP, transit vehicles request an extended green from traffic signals. In PSCWT, a bus operator receives an alert warning of the presence of a pedestrian in the crosswalk. The TSP application is described in more detail in the example project.
- A key strength of C/AV technology is the availability of expanded types of data, such as using vehicles as probes that will permit an expanded set of performance measures and improve tracking of set targets. C/AV infrastructure can efficiently support multiple applications across multiple areas of performance standards. For example, the same RSU that tracks pedestrian presence for PSCW also can collect on-time performance data for TSP.

Element 3. Service and System Evaluation

The third element is an evaluation of the transit system and the service provided. This analysis includes analyzing performance data against standards, conducting on-board ridership surveys, and interviewing regional stakeholders. C/AV considerations relevant to this element include the following:

- Assessment of the impact of C/AV is only possible when sufficient data is available and suitable performance measures are in place. For example, PSCWT can potentially reduce the number of collisions with pedestrians. The agency may collect relevant data as part of a safety performance measure. While PSCWT would primarily improve safety, reducing the number of collisions also would reduce transit delay and overall reliability. New performance measures and data collection methods should then be added accordingly.
- A potential role of C/AV technology will be to introduce new cost effective data sources and collection methods. In the short term, performance data will continue to be collected by traditional methods. Over the medium to long term, C/AV technology can be transitioned to supplement and

replace existing sources and methods. For example, bus speeds and travel times are two sets of data that could be collected by C/AV technology in the short term.

- Agencies should incorporate C/AV-related topics into existing outreach efforts, such as by including C/AV-related questions in surveys and adding CV-related content to presentations.

Element 4. Service Expansion Project Descriptions

The fourth element is to summarize each proposed service expansion project. Project summaries should include estimates of ridership, capital costs, and expected funding and operating expenses. C/AV considerations relevant to this element include the following:

- Agencies should evaluate the potential impact of C/AV technology on ridership forecasts. In the short term, by improving service reliability and the quality and timeliness of traveler information, C/AV technology can improve transit operations and result in higher ridership. In the medium to long term, however, as C/AV technology extends to motor vehicles (including car sharing and ridesharing alternatives), ridership on traditional transit services could decline or could increase as C/AV technology provides improved feeder service and allows greater density of land use. These potential trends should be considered, particularly when planning medium to long term, major capital investments such as bus rapid transit or rail.
- Region-specific prototype installations are a recommended resource for assessing the opportunities and challenges of C/AV adoption, as well for helping agencies cultivate their internal professional capacity. Agencies should plan and budget for technical development activities. Partnerships with institutions of higher education can be helpful in developing training courses and tracking the progress of transit-related pilot deployments.

Element 5. Operations Plan

The fifth element is to describe the transit services the agency intends to provide over the plan period. This analysis should incorporate changes that reflect the ongoing evaluation of services/systems with respect to adopted goals, objectives, standards, and legal and regulatory requirements. The operations plan should be constrained based on reasonably expected revenues. C/AV considerations relevant to this element include the following:

- Many agencies have a limited number of spare buses that can be utilized for C/AV testing. Revenue service vehicles may be utilized instead, which will need careful planning so existing operations are not disrupted. C/AV equipment and system installation should be planned during nonoperating hours and can be coordinated with existing maintenance activities. While the goal is to be able to test C/AV applications during revenue operations, there will still need to be an initial phase of nonrevenue testing. For example, vehicles equipped with OBUs will have to be driven in the field in order to validate communications with RSUs. Agencies should then incorporate further deployment into the operations plan or create a related document that specifies vehicles, routes and time periods that C/AV testing will occur.
- Some C/AV applications will provide audible alerts to operators, such as notifying operators of potential collisions or pedestrians in the crosswalk. Regulatory requirements should be reviewed to address concerns about driver distraction.
- In the medium to long term, C/AV applications can allow for dynamic operations and optimization. The traveling public is increasingly connected with the transit system through smart phones and ITS technologies. This provides opportunity to implement C/AV applications such as intermittent bus lanes, which allow transit vehicles to request priority bus lanes when needed. The surrounding traffic is notified with in-vehicle messages accordingly.

Element 6. Capital Improvement Program

The sixth element is to identify the capital programs required to carry out the operations and services set forth in the operations plan. Capital improvement programs include rehabilitation, replacements, and procurement of vehicles, facilities, and equipment. For each potential investment, the justification, budget, and life-cycle considerations should be documented. C/AV considerations relevant to this element include the following:

- Agencies should identify existing infrastructure and vehicles that require upgrading or integration in order to support C/AV applications. For example, vehicles may need aftermarket units to communicate with DSRC RSUs.
- Agencies should analyze the timing of C/AV deployment taking into account the schedule for upgrading or replacing existing infrastructure and equipment. For example, when traffic signals are upgraded or replaced, a specification should be included to ensure that they can interface with DSRC RSUs.
- As an emerging technology, C/AV has capital, operations, and maintenance costs that are subject to change due to factors such as geography, vendor product differentiation, and software options. As the technology is produced in larger volumes, costs will decrease. Agencies should understand the current limitations of cost estimates, track ongoing deployments, and build into their plans the ability to make cost estimate adjustments over time.
- As C/AV cost estimates are preliminary, there is an inherent level of uncertainty regarding life-cycle costs. It is important that deploying agencies track operations and maintenance costs so that life-cycle costs of future deployments can be project with greater confidence.

Element 7. Financial Plan

The seventh element is to develop a financial plan consisting of the capital and operating budget. This analysis includes expense forecasts; Federal, State, and local revenue projects; competitive demands on funding; and regional priorities and policies. C/AV considerations for the financial plan are analyzed in Case Study #11.

Element 8. Monitoring and Evaluation

In the final element of the TDP, transit agencies describe the process to monitor and evaluate progress towards implementation of the plan. This includes tracking performance measures to evaluate the progress toward meeting defined goals and objectives. The evaluation will ideally inform future decisions about investment and priorities.

C/AV considerations relevant to this element include the following:

- The enhanced and new sources of data generated by C/AV applications should improve the ability to the track performance of C/AV and other investments. In order to fully realize the benefits of C/AV technology, resources should be dedicated to storing and analyzing the data, especially in the early stages of testing.
- Agencies should deploy small-scale pilots, track the effectiveness of C/AV applications in supporting the agency's goals and objectives, and assess whether the pilot should be expanded and/or new applications tested.
- The effectiveness of C/AV deployments in improving transit service, along with costs and deployment best practices, should be documented. This information is valuable and should be

continually assessed over time. Experiences should be shared with State DOTs, MPOs, and other transit agencies to encourage and coordinate C/AV deployment on a national scale.

Example Project: CV TSP

Many transit agencies use transit signal priority (TSP) as a way to improve on-time performance and reliability. Transit buses use emitters to send request to traffic signal controller boxes for signal priority; these process the request and modify the signal cycle accordingly. Typically, TSP logic is to temporarily extend or provide an early start of the original green time. The decision to grant priority and which logic to follow is based on various inputs such as schedule adherence, traffic conditions, bus location, etc.; however, inaccurate and outdated data results in underutilized green times and unnecessary adverse impacts on side streets.

CV technology can potentially introduce a more integrated means to request and grant TSP. The traffic signal system will have more accurate data and enhanced awareness of existing conditions (e.g., traffic volume). DSRC technology allows messages to be sent with low latency 10 times per second; those messages can include other data such as vehicle speeds and brake status. Furthermore, DSRC technology will enable traffic controllers to better handle multiple TSP requests. To enhance safety, emergency vehicle preemption should be integrated on the same communication platform.

Mid-Atlantic University Transportation Center (MAUTC) is active in researching CV-based TSP. A study that evaluated new TSP strategies based on CV technology found in simulations significant improvements in reducing bus delay while minimizing side street impacts. Ongoing research at MAUTC will continue to develop these concepts, including by performing an operational field test. The CV Test Bed in Arizona's Maricopa County has concluded from preliminary results that DSRC is a viable medium for traffic signal priority.

The TDP example project explores the costs and benefits of a new CV-based TSP. In this application, a transit vehicle OBU sends a request for extended green to an RSU. The RSU processes the request and interfaces with the traffic signal controller.

Table 5.10 presents a high-level estimate of the capital costs to deploy C/AV infrastructure, equipment, and the CV TSP application. DSRC RSUs will be installed at each of the 10 intersections, while aftermarket OBUs will be installed on each of the five transit vehicles. Each intersection will require a signal controller and backhaul upgrade. The total budget of this project ranges from $243,000 to $855,000. (There are other costs not captured here, such as annual operations and maintenance costs. See section 3.3 for an explanation of the deployment elements.)

Table 5.10 Preliminary Cost Estimates for CV TSP

Item	Quantity	Per Unit Cost	Total Costs
DSRC RSU	10 intersections	$13,100-$21,200	$131,000-$212,000
Signal controller upgrade	10 intersections	$3,200	$32,000
Backhaul communications	10 intersections	$3,000-$40,000	$30,000-$400,000
Transit Vehicle OBU	5 vehicles	$10,000	$50,000
C/AV Project Total	**–**	–	**$243,000-$855,000**

Source: Cambridge Systematics, Inc.

In the short term, CV TSP will provide similar functionality to current TSP systems. Over the medium to long term, as market penetration of CV-enabled passenger vehicles increases and as emergency vehicles adopt CV technology, the benefits of a connected vehicle environment can be fully realized. For the traveling public, SPaT changes can be provided in-vehicle. For transit and emergency vehicles, priority and preemptions can be handled safely.

5.9 Public Involvement Plan (State and MPO)

States and MPOs are both required to develop a public involvement plan (PIP) (also known as a public participation plan) that defines a process to assure full opportunity for public review and comment during the transportation planning process.

There are general Federal guidelines for developing public involvement processes and procedures; however, there is great flexibility available to transportation agencies when developing public involvement plans for a specific transportation plan, program, or project. There are many publications to assist agencies in this undertaking, including a document on public involvement techniques.

The major components of a public involvement plan can include the following:

1. **Set Goals and Objectives.** Set goals and objectives derived from the specific circumstances of a given transportation plan, program, or project.
2. **Identify the Public Audience.** Identify and analyze the individuals and groups who are directly and indirectly affected.
3. **Develop General Strategies.** Develop strategies to meet established goals and objectives and to involve the targeted audience(s).
4. **Select Specific Techniques.** Based on past experience and existing manuals, analyze and select specific techniques to carry out develop strategies.
5. **Monitor and Evaluate.** Assess the impact of the selected strategies and techniques on public involvement, and update as needed.

This case study does not have specific project example. The discussion below provides a set of recommendations that agencies could incorporate into their PIPs, based on their specific goals, objectives and needs.

PIP Steps and the Role of C/AV

One of the important roles of C/AV in the Public Involvement Plan will be to introduce the general public to the technology. Small-scale demonstrations of C/AV technology and applications may help motivate public interest and regional coordination.

Below, the role of C/AV is examined in more detail within the framework defined above. A summary of each step is provided, followed by a discussion of how to incorporate C/AV and its potential impact.

Step 1. Set Goals and Objectives

The first step in developing the PIP is to establish goals and objectives based on the transportation plan, program, or project at hand. Establishing a clear set of overall goals for the transportation program is essential to the success of the PIP. The more specific the objectives, the greater its chances of producing input that an agency can use in decisionmaking. C/AV considerations relevant to this step include the following:

- The implementation of C/AV technology promises to have much broader impacts on public participation since the influences on the transportation system and society in general are likely to be much greater than those for ITS.
- C/AV may ultimately change roadway layouts and operation and certainly presents the possibility of social, economic, and environmental impacts, factors that will trigger more intensive public involvement. These impacts trigger a requirement to hold public hearings under Federal (and many State and local) guidelines. ITS programs have generally not had these impacts and thus have generated limited public involvement.
- Planning agencies can incorporate C/AV technology into the goal-setting process by identifying whether C/AV presents an opportunity to modify objectives and performance targets and whether the technology can provide more accurate and effective measurement of performance.
- Planning agencies should consider how to identify different audiences, draft outreach material content, and use methods of reaching the public—all of which as they relate to clear presentation of C/AV technology, its potential role in meeting general transportation goals and objectives, and the actions that will be necessary to implement C/AV-related investments. C/AV already is generating questions that the public is likely to express concerns about, including questions relating to data privacy, security, and the implications of a mixed fleet where some drivers have technology and others do not.

Step 2. Identify the Public Audience

The second step in the public involvement process is to identify and analyze the public audience for the given plan, program, or project. Many of the public outreach efforts are project-based, requiring agencies to review who is affected directly and indirectly, as well as those who have shown past interest. The public can be conceptualized as a collection of discrete interest groups, individuals, and a general audience. Agency staff can work with the members of the public to brainstorm and analyze goals and objectives. This process can be effectuated through key person interviews, focus groups, or public opinion surveys. C/AV considerations relevant to this step include the following:

- Depending on the scale and type of C/AV investments, the public audience can include local residents, advocacy groups, neighborhood associations, and political decision-makers.
- Initial C/AV pilot projects may focus on localized corridors or communities but are not likely to have major impacts on the public. These projects do provide an opportunity to help form an

interested community of "early adopters" who can be helpful in supporting expanded efforts. The U.S. DOT's Safety Pilot Project in Ann Arbor, Michigan used this strategy by recruiting members of the public to test DSRC technology.

- More general regional and State planning activities tend to draw less interest from the general public, with participation more likely to come from organized groups involved in transportation such as construction, trucking, or modal advocacy groups (transit, nonmotorized, AAA, etc.). These groups, which already may be participating in the development of planning agency products, can be leveraged to involve wider audiences in discussion of C/AV technology. A recent article noted the potential evolutionary link between warehouse automation, which is being adopted now, and driverless vehicles.
- New audiences can include those industries likely to experience economic impacts from implementation of automated vehicle technology in the short term. Two-way communication can be useful in helping agencies track the levels of market penetration and adoption that are occurring. For example, warehouse operators for large retailers and manufacturers may be adopting automated transportation within their facilities. By partnering, planning agencies can learn how these technologies may be applied to the broader transportation system or specifically to the needs of operational agencies. New, more informal groups interested in C/AV technology can provide conduits for agencies to reach out to interested stakeholders in various industries or in the general public. The Silicon Valley region, for example, has a meetup group on autonomous vehicles that has over 1,300 members.
- U.S. DOT, along with other Federal agencies, has placed great importance on involving groups that have traditionally experienced barriers in participating in transportation public involvement activities. These include minority and low-income groups, persons with disabilities, and persons whose first language is not English. Individuals in these groups may be less likely to participate due to transportation limitations, second or third shift work hours, general lack of information, or a lack of notices in their native languages. C/AV technology presents both opportunities and challenges to these groups; many individuals who currently cannot drive may be able to benefit from automated vehicles, for example. Lower-income individuals, however, are likely to own older cars and thus may be the last to benefit from C/AV safety devices. Their participation is not only needed in the PIP but required by Title VI of the Civil Rights Act (antidiscrimination) which was clarified by an Executive Order that states "each Federal agency shall make achieving environmental justice part of its mission by identifying and addressing, as appropriate, disproportionately high and adverse human health or environmental effects of its programs, policies, and activities on minority populations and low-income populations." This order was further clarified in an implementation memorandum issued by the FHWA and FTA administrators in 1999.

Step 3. Develop General Strategies

In the third step of the public involvement process, agencies develop strategies to meet established goals and objectives and to involve the targeted audience(s). Strategies should fit the target audience in terms of the desired input and the level of interest or education. General approaches respect agency resources of time, money, and staff. A general approach might be visualized as a stream of different activities or be focused on specific public groups or interests. Agencies should solicit feedback from members of the public. C/AV considerations relevant to this step include the following:

- Existing and planned C/AV pilot deployments provide an opportunity to communicate to the public more general information on C/AV technology. Activities such as the University of Michigan's "M City" test facility (developed with Michigan DOT) may be more understandable to the public than traditional outreach materials even if they are closed facilities. M City demonstrates an

opportunity for planning agencies to make use of materials developed by others by linking to other sites that help explain the technology and its potential implications. The South East Michigan Council of governments recently used its transportation blog to inform the public and decision-makers about the benefits of M City in layman's language, including a simulation of a vehicle driving through the facility.

- As C/AV research efforts are ongoing, there is a wealth of information online that is dynamically changing. The U.S. DOT provides many resources that can be shared with the public. Furthermore, a number States active in C/AV research have set up Web sites with information useful to nontechnical stakeholders and the general public. See appendix B for a list of relevant Web sites.
- Professional Capacity Building programs offered by the U.S. DOT provide another opportunity for planners at all levels to obtain information that can inform general outreach strategies. The ITS Professional Capacity Building Program runs frequent webinars and courses, many of which now address C/AV topics. The ITS PCB Web site also contains links to other courses and many are available in archives. U.S. DOT also has a PCB Web site specifically oriented toward planners; it is anticipated that this Web site will be incorporating C/AV training, including the results of this project.
- Partnerships with institutions of higher education can be helpful in developing training courses and tracking the progress of pilot deployments. These partnerships also can be helpful in tracking results from these demonstrations and using the information as part of C/AV-related public involvement strategies.

Step 4. Select Specific Techniques

States and MPOs should select specific techniques to best involve the public in the planning process. These may include public hearings, open houses, workshops, or presentations to professional and community groups. Efforts may include going beyond the usual transportation audiences, such as partnering with private entities. C/AV considerations relevant to this step include the following:

- Higher-level presentations about C/AV technology at business or economic development groups may help to generate interest in the topic. Agencies may consider adding brief presentations or poster sessions about the technology at meetings that are addressing capital projects, since these tend to attract a larger audience and include more of the general public. It is important that feedback mechanisms be built into these efforts, including use of feedback questionnaires at the event or Web sites the addresses of which can be prominently displayed and accessed after the meeting.
- In addition to meetings, agencies also can consider presenting portable exhibits at unconventional sites. In providing outreach for C/AV, agencies should consider some of the activities that have been used for safety-oriented displays that are brought to local fairs, markets, or festivals. The Louisiana Department of Transportation and Development has used tailgating areas at college football games to disseminate road safety messages, for example. Providing information on C/AV technology can be considered part of safety initiatives, and partnering with law enforcement entities can help to attract more attention.
- Media strategies may involve disseminating information on C/AV technology through newspapers, television and videos, billboards, posters, and variable message signs. These media may be used to publicize appearances at public events described above, including agency informational meetings as well as more general public events.
- Agencies planning to incorporate C/AV into their PIPs should consider developing closer ties with educational institutions at all levels. Bringing programs into middle and high schools, for example, can help to educate the next generation and provides a way to reach parents as well.

Partnerships with institutions of higher education can bring a number of benefits, including internship opportunities that help train future employees. Students can be enlisted through class projects to help design materials to communicate C/AV concepts to a wider audience.

- Public involvement strategies related to C/AV can receive attention through Linkedin.com or other Web sites and social networks. Agencies should establish a variety of avenues to readily and conveniently provide information, such as Web sites and social networks. Various media platforms should be considered, including videos, white papers, interactive visualizations, and distribution through both in-person meetings and Web sites. Building upon existing ITS and project Web sites can help to help users understand the evolution of technology. An example can be seen in the Gateway Cities (California) Strategic Plan Web site, which combined information on automated vehicle technology with earlier ITS studies.
- A small-scale demonstration of C/AV technology and applications is a great way to motivate public interest and regional coordination. Demonstrations of C/AV technology have been going on for some time at professional meetings but could be brought into forums that attract more of the general public. In areas where there are local vendors or entrepreneurs involved in the C/AV industry, these partnerships can be conducted in association with economic development efforts.
- The nature of the some of the materials prepared for C/AV may be different that that used for capital projects, for example. As a result, it is important that the PIP document how the material will comply with accessibility requirements.

Step 5. Monitor and Evaluate

The final step in the public involvement process is to monitor and evaluate the program. Agencies should ensure that the public is getting adequate information from the MPOs and State DOTs to facilitate meaningful comments and questions, decision-makers are getting adequate public information when it is needed, and the parties involved represent a diverse cross section of stakeholders. C/AV considerations relevant to this step include the following:

- With Internet content delivery and social media constantly evolving, it important to ensure that the public is getting the most up-to-date information on C/AV research and progress. Some of the methods adopted in the private sector to monitor Web site and social media usage should be adopted where possible. “Low-tech” methods are needed as well, however, particularly in reaching certain groups that may not have adequate access to high-technology.
- Agencies should thoroughly document the effectiveness of strategies for educating and engaging the public about C/AV technology, along with public comments and best practices. Local experiences should be shared with other States and MPOs that are considering C/AV deployment.

5.10 State Freight Plan

MAP-21 includes a number of provisions to improve the condition and performance of the national freight transportation network and support investment in freight-related surface transportation projects. The U.S. DOT, in cooperation with States, is required to establish a national freight strategic plan and national freight performance measures. States are encouraged to develop their own comprehensive plans for immediate and long-range freight-related planning and investment. Projects identified in the statewide freight plan that can improve freight movement are eligible for a higher percentage of Federal matching funds. States are required to set performance targets in relation to the national freight performance measures, which can be a part of the statewide freight plan and/or incorporated into the State LRTP.

The national freight strategic plan will be developed by October of 2015, including 20-year freight volume forecasts, and will be updated at least every five years. States can choose to follow this timeframe and update cycle.

The major elements of a State freight plan can include the following:

1. **Baseline Freight System.** Create an inventory of freight transportation assets. Identify significant freight system trends, needs, and issues.
2. **Policies, Strategies, and Institutions.** Discuss freight-related funding programs, regional planning activities, and infrastructure owners that will guide the freight improvement strategy.
3. **Goals and Measures.** Develop strategic goals and measures of condition and performance. Assess the condition and performance of the freight transportation system.
4. **Alternative Improvements.** Develop alternative improvements such as investments and policies. Consider innovative technologies and operational strategies to improve mobility and maintain roads at risk of deterioration.
5. **Improvements Strategy.** Analyze and prioritize improvements, including analysis of how each improvement will advance the strategic goals.
6. **Implementation Plan.** Develop short-term and medium- to long-term strategies and a timeline for proposed freight improvements, taking into account funding considerations.

State Freight Plan Elements and the Role of C/AV

C/AV technologies will impact State (and MPO) Freight Plans in a number of ways. C/AV technology has the potential to reduce emissions from commercial vehicles, improve safety, and produce economic benefits. Incorporating C/AV into freight plans is particularly important as the freight industry and its component segments such as trucking, warehousing, and port/intermodal terminal operations are likely to be among the early adopters of the technology. This will provide useful feedback as C/AV market penetration increases.

Below, the role of C/AV is examined in more detail within the framework defined above. A summary of each element is provided, followed by a discussion of how to incorporate C/AV and its potential impact.

Element 1. Baseline Freight System

The first element of the State freight plan includes creating an inventory and assessing the existing multimodal freight network and assets in the State. Significant freight system trends and needs should be identified, documenting issues with the existing system. An inventory of facilities with freight mobility issues is required, with a particular emphasis on routes that are used to move equipment and goods into and out of these regions. C/AV considerations relevant to this element include the following:

- Agencies should identify existing infrastructure that should be upgraded/integrated in order to support C/AV applications. For example, signal controllers on a heavily used freight corridor may need to be modified in order to communicate with DSRC RSUs.
- Agencies should collaborate with private freight companies to catalogue the technologies being implemented, such as fleet management/tracking systems and advanced driver assistance systems (ADAS). It also is important that agencies ensure the confidentiality of detailed information due to competitive concerns.
- Compilation of estimates of the regional market penetration of C/AV technology in the overall fleet over the short term and the medium to long term will be useful to the freight planning process. As

C/AV infrastructure is still isolated and only aftermarket units are available, initial deployment planning should use truck fleets. The U.S. DOT's FRATIS program is an important pilot program that includes a bundle of applications providing freight-specific dynamic travel planning and performance information and optimizes drayage operations so that load movements are coordinated between freight facilities to reduce empty-load trips. Three test sites have been in operation since 2013, which are described later in this case study.

- Evaluation of baseline conditions should go beyond shipments and physical facilities and identify the availability of real-time information for operations and travel conditions. C/AV technology will potentially introduce new and alternative data sources and collection methods. In the short term, baseline information will continue to be collected by traditional methods. Over the medium to long term, C/AV technology can supplement and replace existing sources and methods. For example, travel times and pavement conditions data can be collected by C/AV technology in the short term. Section 4.0 discusses this more.

Element 2. Policies, Strategies, and Institutions

The second element of the plan is a description of freight-related funding programs, policies, and strategies, and institutions that will guide the freight improvement strategy. Freight-related funding programs can include a list of the State's loan and grant programs that are available to pay for freight-related transportation infrastructure. Policies and strategies can include an overview of legal constraints, the State's investment priorities, and the level of participation in multistate freight planning activities. Institutions include port authorities, toll roads, and bridge and tunnel authorities. Documentation should include an explanation of the governance structures and funding mechanisms for these authorities, along with identification of the private freight transportation infrastructure owners. C/AV considerations relevant to this element include the following:

- Funding of vehicle-related C/AV deployments will be made primarily in the private sector and reflect business decisions made by fleet and truck owners. In order for system-level benefits to be achieved, public investments should leverage these private investments to the extent possible. In looking at funding opportunities, it is important to remember that there are many complex issues regarding the security, privacy, and liability of C/AV technology that are not yet resolved. Agencies should participate in U.S. DOT efforts to develop CV standards and collaborate with the freight industry to implement them. Secure and safe interfaces for V2I and V2V communications will be essential if these systems are to gain acceptance by private freight truck companies and drivers. Public investments in communications networks that support security, for example, may have a high return in that they encourage fleet owners to invest in C/AV technology.
- The Freight Plan should explain the importance of coordinating State and Federal investment, as C/AV technology, like most ITS technology, will have greater benefits as part of a comprehensive system, rather than if deployed in isolation in limited operational environments. For example, while improved traffic flow may be the primary motivation for installing C/AV infrastructure on an arterial corridor with high levels of freight traffic, this investment lays the foundation for other C/AV applications to be deployed, thus allowing for a multitude of system-level benefits. Along with sharing infrastructure, the data collected from these applications should be available to each participant in the planning process.
- C/AV-related investment plans should take advantage of the lessons learned from C/AV test beds and pilots. As likely early adopters of the technology, freight-oriented businesses should be included as important stakeholders in the design and development of test beds. The recently awarded Connected Vehicle pilot in Wyoming will be focused on the commercial vehicle market and include active participation by the industry. Agencies also should seek recommendations of

private-sector companies such freight truck manufacturers, aftermarket products, and security management for C/AV products and services.

Element 3. Goals and Measures

In this element, States develop strategic goals, define measures of condition and performance, and assess the performance of the freight transportation system. Strategic goals should be set in relation to national freight goals, with the option of including additional goals specific to the State. The national goals for the freight transportation system include improving economic competitiveness and safety, maintaining a state of good repair, and reducing congestion and environmental impact. Measures of condition and performance should be developed in relation to the goals and will guide the State's freight-related transportation investment decisions. For each goal, there would be at least one measure of condition or performance that reflects the outcomes important to the freight system's users and the general public. C/AV considerations relevant to this element include the following:

- Table 5.11 shows a set of highway-related performance measures identified in the Vermont freight plan, which followed the Federal guidelines discussed above, and measures that might be impacted by C/AV technology. In some cases, they will be directly impacted by C/AV, while in others C/AV technology can support the collection of needed data.

Table 5.11 Proposed Vermont Freight Plan Performance Measures

Level	Goal	Highway Freight Measures Potentially Impacted by C/AV
Economy	Support the movement of goods into, out of, and within Vermont	Truck tons, ton-miles, value • Statewide • Major truck-intensive economic sectors
Economy	Ensure the effective and efficient delivery of projects, maintenance, incident management, and snow removal	Stakeholder outreach & communications
Logistics/ Operations	Promote efficient operation of the transportation system	Travel time and reliability • Major market lanes • Border crossing delays
Logistics/ Operations	Maximize safety on the transportation system	Fatalities and crashes Statewide
Logistics/ Operations	Promote environmental stewardship	GHG emissions Hazmat spills
Infrastructure	Maintain existing infrastructure, preserve pavements and structures	Pavement condition • Pavement composite condition measure • Structural cracking index • Percent miles rated IRI "Good" Bridge condition • Number rated structural deficient

Source: Vermont Freight Plan, prepared for Vermont Agency of Transportation by Cambridge Systematics, Inc., May 2013 updated February 2015, page ES-10.

- C/AV technology permits the collection of real-time system information, including both traffic and infrastructure condition. C/AV probe applications can be used to constantly measure the performance of the State freight network. Over time, this will provide much more high fidelity data (i.e., versus intermittent traffic count point programs, loop detectors, etc.) that can be used both to assess needs and assist in forecasting future traffic flows and infrastructure improvements.
- C/AV technology in the long run may enable agencies to adopt more ambitious objectives and performance measure targets. For example, NHTSA estimates that V2I and V2V systems can potentially address up to 79 percent of heavy vehicle crashes. At the same time, agencies and stakeholders should have realistic expectations for short-term impacts of C/AV applications, as initial applications will be modest in terms of scope, geography, and capabilities. Truck platooning may change assumptions related to capacity and throughput, which can then be used to adjust goals and objectives related to traffic flow and delay. Agencies should revisit these over time as C/AV market penetration increases and benefits start to be realized.
- Partnerships with freight industry stakeholders will be important in setting realistic objectives and performance measures. As larger fleets deploy C/AV technology as early adopters, they will be tracking changes in delivery times, fuel consumption, and crash rates. These in turn could result in productivity and cost savings in a number of areas, including overtime, fuel costs, and insurance. Private companies will want to protect this information for competitive reasons, but they may be willing to provide aggregate or “scrubbed” data to help agencies identify future investments that help the industry.
- C/AV technology provides opportunities to improve air quality through reductions in truck delays and idling. Planners will need both analytical tools and new data collection efforts to evaluate these impacts and account for them in air quality improvement programs.

Element 4. Alternative Improvements

In this element, States develop alternative improvements to address the goals defined in the previous element, such as investments and policies focused on safety, mobility, road condition, and environmental matters. Innovative technologies and operational strategies, such as intelligent transportation systems, should be considered, particularly to improve the safety and efficiency of freight movement. C/AV considerations relevant to this element include the following:

- Planners will need tools to evaluate the impact of V2V and V2I technologies on operational efficiency and commercial vehicle safety. For example, models will be needed that can assess the impacts of truck platooning and partial truck automation on throughput and safety. These impacts in turn will inform investment decisions related to freight movement, including modal investments, investments in geographic areas, and investments in specific facilities.
- Truck platooning enabled by C/AV technology can allow for more efficient and safer truck travel, by increasing truck throughput in freeways, increasing fuel efficiency, and reducing emissions, for example. Truck platooning can be considered an already emerging technology, with companies such as Peloton and Volvo planning to roll out commercially viable platooning systems within the next two years. In addition, the FHWA currently is sponsoring to major platooning prototype demonstrations, one in Georgia, and another in California. Modeling and simulation research proposed in Task 3 of this project also will be helpful in identifying the operational impacts of platooning. For example, will platoons need to be limited to inside lanes, in order to allow other vehicles to safely exit the highway? It will be important for planners to follow research in this area and adopt analytical techniques when they become available.
- While data on the capital, operations, and maintenance costs of C/AV is available, it is preliminary. As an emerging technology, C/AV has costs that are subject to change due to such factors as geography, vendor product differentiation, and software options. As the technology is produced in

larger volumes, costs will decrease. Agencies should understand the current limitations of cost estimates, track ongoing deployments, and build into their plans the ability to make cost estimate adjustments over time. Potential early adoption of C/AV technology by the freight industry can be helpful in refining cost estimates.

- Planners should understand the potential needs created by C/AV investments, particularly the resources needed to store and analyze the increased volume of data generated by C/AV applications. Storage and confidentiality agreements may vary depending on the data source, with freight data suppliers having their own set of requirements. As noted in section 3.0, the development of policies and regulations related to data availability and usage should be tracked by agencies wishing to use the data. Planning agencies may play a role in influencing related laws, policies and regulations.
- Consideration should be given to deployment of C/AV technology when existing infrastructure and equipment are scheduled for upgrades or replacement. In the short term, C/AV technology will enhance the functionality of current ITS infrastructure. In the medium to long term, C/AV technology can be expected to replace applicable ITS infrastructure elements. Freight plans should coordinate C/AV deployments with agencies and private stakeholders involved in truck enforcement and inspection, for example. The technology could help to improve efficiency and reduce the cost of enforcement activities.
- Planning agencies should reevaluate investments in future port- and terminal-related infrastructure (e.g., freeway lanes) needed to service these facilities; reductions in lane-miles can potentially be realized by increased truck throughput due to C/AV technologies.
- Planning agencies will have an opportunity to work with commercial vehicle enforcement personnel to identify ways in which C/AV technology can be utilized for more cost effective enforcement. For example, virtual enforcement technologies developed by the Smart Roadside Program can potentially reduce the need for future State infrastructure investment in fixed truck inspection stations.
- Freight Advance Traveler Information Systems (FRATIS) could have a significant positive impact on the efficiency of truck transportation operations at ports, terminals, and warehouses. Improving freight transportation efficiencies through these facilities could allow for future expansions of infrastructure (including intermodal connectors being planned by State DOTs and MPOs) to be either deferred or eliminated altogether. FRATIS is discussed in detailed in the example project in the next section.

Element 5. Improvements Strategy

In the fifth element, States analyze and prioritize improvements, including providing an analysis of how each improvement will advance the strategic goals. A complete freight improvement strategy will have different improvements ranked in order of priority or grouped into higher and lower priority groups. The improvements strategy also should include an analysis of the outcomes, such as the impact on the deterioration of infrastructure along key freight routes. Furthermore, strategies should be coordinated with other transportation plans, such as the State LRTP. C/AV considerations relevant to this element include the following:

- As C/AV is an emerging technology, it may be difficult to quantitatively rank C/AV projects using traditional evaluation metrics such as benefit-cost ratio. The costs and benefits are still stabilizing and depend on many factors such as market penetration, industry competition, and regional coordination. When considering operational and ITS improvements on major freight corridors, section 4.0 of this document can be helpful in identifying areas where C/AV can enhance, supplement, or replace more traditional ITS solutions.

- Planning agencies should provide incentives for the freight industry to come forward and participate in the development of strategies for improvements. Private companies may have data that can help support improvements but may be reluctant to provide it to public agencies out of concern that competitors may gain access to it. Agencies should work with private-sector partners and stakeholders to address these concerns. Aggregating data from multiple sources is one possible solution.
- Impacts of C/AV technology on major medium- to long-term investments will increase as market penetration of C/AV technology and users matures. Reduced crash rates and roadway capacity requirements could impact the benefit-cost ratios of medium- to long-term, high-cost, freight-oriented capital investments such as major rail line improvements and new/expanded freeways. Given the uncertainties in technology adoption and timing, agencies should, as part of the alternatives analysis process, analyze different scenarios and conduct a more rigorous level of risk analysis than in the past. These scenarios will go beyond those evaluated in the past, including consideration of alternative economic and land use assumptions. These assumptions should be revisited on a regular basis as C/AV technologies advance.

Element 6. Implementation Plan

The final element is the implementation plan. This plan should show both short- and medium- to long-term strategies for implementation, including a time line for each proposed freight improvement. The implementation plan also should discuss funding for each project, such as revenue stream and general fund considerations for capital improvements. Finally, States often propose partnerships with private infrastructure owners (e.g., railroads) and adjacent States (e.g., on projects/freight corridors that cross State lines). C/AV considerations relevant to this element include the following:

- C/AV technology deployment will consist of both field infrastructure and freight truck OBUs. Private manufacturers are producing both aftermarket and embedded OBUs. States should coordinate with freight truck companies to time infrastructure deployment with freight truck upgrades/purchases, ensure that roadside units are compatible with in-vehicle units, and confirm that data collection and sharing agreements are in place. Enforcement-related messages, curve warnings, and bridge height warnings are three applications that might be considered for early adoption; each requires coordination among multiple public jurisdictions and private-sector entities.
- Ongoing monitoring of deployments is important to provide thorough documentation of the effectiveness of C/AV deployments in meeting their freight objectives along with costs and deployment best practices. Performance measures such as those shown under Element 3 need to be reviewed and updated on a regular basis. Experiences should be shared with other States developing freight plans.

Example C/AV Project: Regional FRATIS Phase II

The U.S. DOT recently funded the first phase of the Freight Advanced Traveler Information System (FRATIS), which is part of the Connected Vehicle program, under the category of Dynamic Mobility Applications (DMA). The goal of FRATIS is to improve freight transportation system efficiency through improved data sharing between freight supply chain partners and through improving the quality and dissemination of freight-oriented traveler information.

As an example, the FRATIS project in the Los Angeles (FRATIS-LA) region is specifically focused on movements in and out of the Ports of Long Beach and Los Angeles, with a primary goal of optimizing information sharing between drayage fleets and marine terminals. FRATIS-LA also includes real-time

messages on incidents, congestion alerts, and travel-time information. By using this information, truck fleets can be routed more efficiently when delivering and picking up shipments, and the number of unproductive runs can be reduced. By providing information that can help trucks avoid congested areas, as well as better notice to marine terminals on truck arrivals, congestion can be reduced, operational efficiencies gained, and fuel consumption and emissions reduced. Information is obtained from a variety of public and private sources and fused together.

There are two specific FRATIS DMA applications under one bundle. The first part, Freight-Specific Dynamic Travel Planning and Performance, consists of a series of applications that integrate freight traveler information, dynamic route guidance, and public-sector performance monitoring through ITS systems, purchased travel time or other technologies. The second part, Drayage Optimization, involves integrated load matching and freight information exchange, including appointment scheduling and equipment availability at intermodal terminals.

A Phase II of FRATIS-LA, funded by U.S. DOT, currently is entering the design stage. FRATIS Phase II will add DSRC OBU, which will enable FRATIS to be integrated with emerging V2I applications.

For FRATIS Phase II deployment, these corridors will now be equipped with DSRC RSUs. Planners see opportunities to provide earlier, more targeted information to truckers to route them more efficiently and better planning information to terminal and warehouse operators. The latter would benefit from more timely information on truck arrivals and the region could benefit from reduced congestion and emissions.

The proposed program is driven by several goals and objectives identified in the regional freight plan, including the following:

- **Improved mobility—**Providing improved routing information so that trucks can shift routes between congested and uncongested facilities
- **Improved safety—**Potentially reduce secondary crashes by reducing congestion and routing trucks away from areas that are difficult for them to negotiate
- **Reduced fuel consumption and emissions—**More efficient operation would save on fuel consumption and reduce vehicular emissions. Reduced queuing at terminal entrances is one of the demonstration objectives and can have a major impact on emissions reduction.

Important steps in implementing a FRATIS demonstration include the following:

- **Recruit Stakeholders—**Identify and recruit major stakeholders to be involved in the process, including potential private-sector partners who may wish to participate in the demonstration. Stakeholder feedback should be obtained at all stages of the process.
- **Needs Analysis—**Using data from freight plans and other sources, identify deficiencies in the system and needs from a technical perspective.
- **Concept of Operations—**Define the overall program, high-level technical requirements, data flows, scope of initial deployment, responsibilities for implementation and ongoing operation, key stakeholders, stakeholder outreach program, and cost estimates.
- **Participant Recruiting—**Once the Concept of Operations is accepted, recruit participants. A number of elements may be needed in participant agreements related to equipment installation and maintenance, data confidentiality, liability, and reporting of results for evaluation purposes.
- **Monitoring—**A process should be put in place to monitor and track the program and address any problems and needs that arise during the demonstration period.

- **Evaluation—**Evaluation of the results is an important activity that will help determine whether the program should be expanded or modified. An evaluation program should define data requirements, collection and management techniques, analytical methods, participant surveys, and presentation formats.

It should be noted that the planning agency may not have primary responsibility for all of the activities mentioned above, but it should thoroughly document the process in the freight plan, along with any plans for expansion. Unit costs are estimated below based on costs documented as part of the Los Angeles area FRATIS demonstration.

Table 5.12 presents a high-level preliminary estimate of costs to deploy and pilot CV infrastructure, equipment, and the FRATIS Phase II applications. DSRC RSUs will be installed at each of the 20 intersections and freight vehicles will be equipped with OBU and navigation devices. Each intersection will require a signal controller and backhaul upgrade. There also will be Wi-Fi/Bluetooth readers at port terminals for queue detection, service fees and agreements, and annual operations and maintenance costs. The total budget for this project ranges from $1.0 million to $2.3 million. (There are other costs not captured here, such as software development costs. (See section 3.3 and FRATIS Phase I document for an explanation of the deployment elements.)

Table 5.12 Preliminary Cost Estimates for FRATIS

Item	Quantity	Per Unit Cost	Total Costs
DSRC RSU	20 intersections	$13,100-$21,200	$262,000-$424,000
Signal controller upgrade	20 intersections	$3,200	$64,000
Backhaul communications	20 intersections	$3,000-$40,000	$60,000-$800,000
Freight vehicle OBU	50 freight vehicles	$10,000	$500,000
Navigation Device (Estimates from FRATIS Phase I)	50	$400	$20,000
Hardware for Queue Detection (Estimates from FRATIS Phase I)	8	$16,000	$128,000
Service Fee and Agreements (Estimates from FRATIS Phase I)	1	$7,000	$7,000
Annual O&M (Estimates from FRATIS Phase I)	1 year	$30,000	$30,000
C/AV Project Total	**–**	–	**$1,071,000-$2,295,000**

Source: Cambridge Systematics with input from Los Angeles-Gateway FRATIS Final System Design and Architecture for FRATIS Protoype, FHWA, May 2013.

It should be noted that if the first phase deployment is considered successful and the freight plan recommends further expansion, some of the costs incurred, such as application development, can be considered “sunk costs” and will make further additions more cost effective.

5.11 Financial Plan (State and MPO)

The financial plan provides information important for investment analysis, project selection, and deciding which projects to move from the transportation plan to the STIP/TIP. A financial plan is required in MTPs and may be included in the statewide LRTPs. Many planning agencies do not develop a separate financial plan but incorporate it into their other planning documents, including the TIP, STIP, and Long-Range Planning documents. Separate financial plans are often developed for specific purposes such as tolling proposals or public-private partnership projects or to evaluate new revenue-raising proposals.

A key component of a performance-based transportation plan is the review and estimation of available financial resources. To determine how the adopted strategies in the transportation plan can be implemented, the transportation plan should indicate resources from public and private sources that are reasonably expected to be available to carry out the plan, potentially including additional financing strategies.

According to FHWA's Performance-Based Planning Guidelines, major elements of the financial plan include the following:

1. **Funding Streams.** Indicate and describe funding streams from public and private sources at the Federal, State, and local levels.
2. **Funding Projections.** Estimate project funding to be available from each funding stream over the life of the transportation plan.
3. **Financing Strategies.** If needed, include additional financing strategies such as pricing mechanisms (specific taxes or pricing strategies) to finance specific projects or to incentivize certain behaviors.

This case study will focus on the financial plan as it relates to the MTP; however, the C/AV discussion also is relevant to other planning products that include a financial plan such as State LRTP, STIP/TIP, TAMP, and TDP. An example project is not included as the case study only addresses the development of a financial plan, not specific projects.

Financial Plan Elements and the Role of C/AV

One of the important roles of C/AV in the financial plan will be to bring a new set of infrastructure funding requirements along with opportunities to leverage new sources of financing. In the long run, C/AV technology, combined with the sharing economy, could have major impacts on financing of the transportation system. Studies have indicated that a predominance of shared vehicles, which are more heavily used, could reduce the overall demand for vehicles significantly. This in turn would result in a significant reduction in public revenue from sources such as vehicle registrations, inspections, vehicle sales and excise taxes and tolls.

Below, the role of C/AV is examined in more detail within the framework defined above. A summary of each element is provided, followed by a discussion of how to incorporate C/AV and its potential impact.

Element 1. Funding Streams

In the first element of the financial plan, MPOs indicate and describe the funding streams available from public and private sources. This includes funding from the Federal, State, and local levels, along

with existing debt financing, toll equity, and public-private partnerships. Anticipating the overall level of Federal revenues and local match is a core element of the financial analysis. C/AV considerations relevant to this element include the following:

- As discussed in section 3.2, it is anticipated that funding of national connected vehicle infrastructure may be similar to that for the 511 program. While it is unlikely for there to be congressionally designated funding to support nationwide connected vehicle infrastructure deployment, V2I infrastructure deployment and associated O&M costs may be eligible under various Federal-aid funding programs in the same manner at ITS field infrastructure. Furthermore, AASHTO could encourage the creation of an incentive program (similar to the 511 planning and deployment assistance program) that would provide grants to deploying agencies. Planning agencies should track these programs and, to the extent possible, participate actively in them.
- Specific V2I applications may be eligible for existing program funding if requirements are met. V2I safety applications may be eligible for HSIP if they address a State's SHSP priority. V2I mobility applications may be eligible for National Highway Performance Program and Surface Transportation Program funds. V2I environment applications may be eligible for Congestion Mitigation and Air Quality funds. More details will be available in the 2015 FHWA V2I Deployment Guidance.
- C/AV technology is likely to need some support from agencies that own the roadway infrastructure. In addition to V2I applications, these could include use of roadside infrastructure and communications networks for system health reporting, traffic management, traveler information, and security. New financial arrangements may be needed to fund these supporting services.

Element 2. Funding Projections

The second element is to estimate and project, over the life of the transportation plan, the availability of funding streams identified from the previous element. Funding streams may fluctuate, as State gas tax revenues do based on economic conditions, so a margin of error should be built into the estimates. C/AV considerations relevant to this element include the following:

- In the long term, widespread adoption of C/AV technologies could reduce the need for some current investments, including those related to safety and ITS. Some capital expansions currently programmed may not be needed if additional capacity can be gained through C/AV technology. Section 4.0 demonstrates how some ITS services now supplied by the public sector may be available through the private sector. Even if public-sector funding continues to decline in real terms, there may an opportunity to shift some funds to support C/AV technology.
- Given the difficulties in forecasting C/AV market penetration and the lack of prospects for dedicated public funding, it will be difficult to build these changed assumptions into any current financial plans; however, planners should track developments, identify C/AV-related needs that are in the public investment realm, and identify future funding opportunities.
- C/AV technology, combined with the sharing economy, could reduce revenues from funding mechanisms such as sales tax and vehicle registration fees. Improved fuel economy and increases in electric vehicle use already are resulting in reduced fuel tax revenue, a trend that could be accelerated by a more efficient use of the fleet. Similar reductions in parking fees and taxes are likely as well. Another impact of C/AV technology is a reduction in traffic violations, towing fees, and similar sources that many jurisdictions rely on as a source of revenue. Most of the public would likely agree that the positive impacts of these changes outweigh the loss of these current revenue sources; however, new and innovative financing strategies will be needed to fund

the system, and planners are likely to play an essential role in identifying new and evolving funding sources.

Element 3. Financing Strategies

The final element, if needed, recommends any additional financing strategies required to support specific projects or to incentive certain behaviors. Financial strategies can include tolls and pricing, bonds, and Public/Private Partnerships (PPP). Moreover, cash management techniques (e.g., flexible match and toll credits) should be reflected in the financial plans. C/AV considerations relevant to this element include the following:

- The in-vehicle components of C/AVs will likely be provided through the private sector, although public regulation of the devices is likely. NHTSA already has announced its intention to require DSRC devices in new light vehicles, probably starting in 2019-2020. How much additional regulation and inspection of these in-vehicle systems will be needed currently is unknown. Regulation or regular inspection of these devices may require additional funding mechanisms, possibly the types of user fees that currently fund both vehicle inspections and the public licensing and oversight of the inspection system.
- As discussed in section 3.2, public/private partnerships, including relationships with data service providers and commercial application developers, are a potential funding source. State agencies may be able to charge for private use arrangements, which is subject to FHWA approval. The 2015 FHWA Deployment Guidance will include a discussion on “private secondary use” of rights-of-way. Agencies should be aware that public/private partnerships is an very complex area involving business models and valuable of CV data, so agencies should be clear on roles and responsibilities.
- C/AV technology could be utilized in revenue collection programs such as tolling, congestion management, and VMT fees. Estimating costs of adapting the technology to these purposes would require identification of costs and privacy concerns as well as long-range plans for transition from current technology. Private companies are attempting to develop ways to monetize the benefits of C/AV technology, such as crash reduction and reduced insurance. A recent paper by Cisco noted that road user/VMT fees may provide an opportunity to do this. While these plans will feature many technology components, they also should be integrated into financial planning.
- New cost-sharing opportunities with the private sector may be developed to help fund needed public C/AV investments. Vehicle owners (fleets or individuals) may need to pay fees for security, for example, or may have options to purchase in-vehicle services. Some of the proceeds from these new revenue streams could be allocated to help pay for the capital, operating, and maintenance costs of new C/AV-related infrastructure. These opportunities with private parties that need to be documented in financial plans.
- Financing plans and strategies should be reviewed at more frequent intervals as C/AV market penetration trends become clearer and new financial strategies emerge. Of particular relevance to planners will be the changing costs of C/AV infrastructure, which are expected to come down and eventually stabilize as economies of scale take hold. Financing strategies rely on having the best cost estimates possible, so it is important that planners stay up to date regarding the latest empirical data and estimation tools. The high-level cost estimation tool created by U.S. DOT may be a useful resource.
- C/AV technology implementation may result in changes in, or clarifications to, existing funding guidelines and eligibility requirements. In developing C/AV investment plans, it is important for planners to track the changes and obtain additional information where clarification is required.

Appendix A: List of Abbreviations

Acronym	Definition
AASHTO	American Association of State Highway and Transportation Officials
AERIS	Applications for the Environment: Real-Time Information Synthesis
AV	Automated Vehicle
C/AV	Connected/Automated Vehicle
COPILOT	Cost Overview for Planning Ideas and Logical Organization
CSW	Curve Speed Warning
CV	Connected Vehicle
CVRIA	Connected Vehicle Reference Implementation Architecture
DMS	Dynamic message sign
DOT	Department of Transportation
DSRC	Dedicated Short-Range Communications
DUAP	Data Use Analysis and Processing
EADSI	Eco Approach and Departure at Signalized Intersections
EV	Emergency Response Vehicle
FRATIS	Freight Advance Traveler Information Systems
FCC	Federal Communications Commission
FHWA	Federal Highway Administration
FSP	Freight Signal Priority
FTA	Federal Transit Authority
MAUTC	Mid-Atlantic Universities Transportation Center
GHz	Gigahertz
ITS	Intelligent Transportation Systems
JPO	Joint Program Office
LRTP	Long-Range Transportation Plan
MAP-21	Moving Ahead for Progress in the 21st Century Act
MPO	Metropolitan Planning Organization
MTP	Metropolitan Transportation Plan
NHTSA	National Highway Traffic Safety Administration
O&M	Operations and Maintenance

Acronym	Definition
OEM	Original Equipment Manufacturer
OBU	On-board Unit
PIP	Public Involvement Plan
PBPM	Probe-Based Pavement Maintenance
PPP	Public-Private Partnerships
PSCWT	Pedestrian/Bicyclist in Signalized Crosswalk for Transit Vehicles
RSU	Roadside Unit
SET-IT	Systems Engineering Tool for Intelligent Transportation
SHSP	Strategic Highway Safety Plan
SIP	State Implementation Plan
SPaT	Signal Phase and Timing
STIP	State Transportation Improvement Program
TAMP	Transportation Asset Management Plan
TDP	Transit Development Plan
TIP	Transportation Improvement Program
TSM&O	Transportation Systems Management and Operations
TSP	Transit Signal Priority
U.S. DOT	United States Department of Transportation
V2I	Vehicle-to-infrastructure
V2V	Vehicle-to-vehicle
VMT	Vehicles-miles traveled

Appendix B: References and Additional C/AV Resources

Documents

U.S. DOT Connected Vehicle Program 101
https://www.pcb.its.dot.gov/documents/ConnectedVehicle_Program101.PDF

Planning for CV Factsheet
http://www.its.dot.gov/factsheets/pdf/PlanningFutureTransportation_FactSheet.pdf

AASHTO Footprint Analysis (Executive Summary)
http://www.its.dot.gov/itspac/Dec2014/AASHTO_FootprintAnalysis.pdf

AASHTO Footprint Analysis (Full Report)
http://stsmo.transportation.org/Documents/AASHTO%20Final%20Report%20_v1.1.pdf

AASHTO Near-Term V2I Transition Phasing and Analysis Project
http://www.itsa.wikispaces.net/file/view/AASHTO+Near+Term+V2I+Transition+Phasing+and+Analysis_Background+Information_FINALdocx.pdf

2015 FHWA V2I Deployment Guidance (Draft)
http://www.its.dot.gov/meetings/pdf/V2I_DeploymentGuidanceDraftv9.pdf

NHTSA V2V Proposed Rule-Making
http://www.nhtsa.gov/About+NHTSA/Press+Releases/2014/NHTSA-issues-advanced-notice-of-proposed-rulemaking-on-V2V-communications

NHTSA V2V Proposed Rule-Making Supporting Report
http://www.nhtsa.gov/staticfiles/rulemaking/pdf/V2V/Readiness-of-V2V-Technology-for-Application-812014.pdf

COPILOT Cost Estimation Detail
https://co-pilot.noblis.org/CVP_CET/resources/noblis/csv/CV_Components_Detail_12_11_2014.xlsx

CV Standards Plan
https://www.standards.its.dot.gov/content/documents/V2x_standardization_plan.aspx

Tools

COPILOT
https://co-pilot.noblis.org/CVP_CET/

Turbo Architecture Software
http://www.iteris.com/itsarch/html/news/news.htm#04-2015

SET-IT
http://www.its.dot.gov/arch/set_it.htm

Web Sites

U.S. DOT CV Main Web site
http://www.its.dot.gov/landing/cv.htm

U.S. DOT CV Pilot Deployment Project
http://www.its.dot.gov/pilots

U.S. DOT CV Pilot Applications
http://www.its.dot.gov/pilots/cv_pilot_apps.htm

U.S. DOT CV Video Library
http://www.its.dot.gov/library/video.htm

U.S. DOT CV Test Beds
http://www.its.dot.gov/testbed.htm

Florida DOT CV Program
http://www.automatedfl.com/

CVRIA
http://www.iteris.com/cvria/

Select Applications

AERIS
http://www.its.dot.gov/aeris/pdf/04_OpportunitiesEnvApplicationsNearTermDeployments.pdf

CSW
http://ntl.bts.gov/lib/48000/48500/48523/272C82A5.pdf

FRATIS
http://ntl.bts.gov/lib/54000/54400/54477/Fratis_FHWA-JPO-14-179.pdf

Pedestrian and Bicyclist Mobility
http://www.savarinetworks.com/products/smart-apps/

PREEMPT
http://trid.trb.org/view.aspx?id=1329805

PBPM
http://trid.trb.org/view.aspx?id=1289388

TSP
http://www.mautc.psu.edu/docs/UVA-2012-04.pdf

Virtual DMS
http://www.matsutc.org/wp-content/uploads/2015/07/Alona-Green-Paper.pdf

U.S. Department of Transportation
ITS Joint Program Office-HOIT
1200 New Jersey Avenue, SE
Washington, DC 20590

Toll-Free “Help Line” 866-367-7487
www.its.dot.gov

FHWA-JPO-16-281

U.S. Department of Transportation