ENVIRONMENTAL CONSIDERATIONS IN THE USE OF SALVAGED ASPHALT PAVEMENT

Prepared for

STATE OF MONTANA
DEPARTMENT OF TRANSPORTATION
RESEARCH PROGRAM

in cooperation with

U.S. DEPARTMENT OF TRANSPORTATION
FEDERAL HIGHWAY ADMINISTRATION

JULY 1994

By

JOAN A. PRIBANIC
DEPARTMENT OF CHEMISTRY AND BIOCHEMISTRY
MONTANA STATE UNIVERSITY
BOZEMAN, MONTANA 59717

TECHNICAL REPORT DOCUMENTATION PAGE

1. Report No. FHWA/MT-96/8110-1	2. Government Accession No.	3. Recipient's Catalog No.
4. Title and Subtitle Environmental Considerations in the Use of Salvaged Asphalt Pavement	5. Report Date July 1994 6. Performing Organization Code MSU G&C # 290378	
7. Author(s) Joan A. Pribanic	8. Performing Organization Report No.	
9. Performing Organization Name and Address Department Of Chemistry Montana State University Bozeman, MT 59717	10. Work Unit No. 11. Contract or Grant No. 8110	
12. Sponsoring Agency Name and Address Montana Department of Transportation 2701 Prospect Avenue PO Box 201001 Helena, MT 59620-1001	13. Type of Report and Period Covered Final Report May 1993-July 1994 14. Sponsoring Agency Code 5401	

15. Supplementary Notes

Research performed in cooperation with the Montana Department of Transportation and the US Department of Transportation, Federal Highway Administration.

16. Abstract

The purpose of this sub-study (part of a larger research project on salvaged asphalt) was to investigate the potential for soil and/or groundwater and/or surface water contamination arising from the stockpiling, use, or disposal of salvaged asphalt pavement in Montana. The investigation was keyed to the four asphalt sources generally used in Montana highway pavements, those sources being the four Montana oil refineries. Asphalt from each refinery exhibits unique molecular and chemical attributes. Road surface contamination resulting from vehicular road use was recognized as a factor impacting this study, but was not researched.

Asphalt paving materials (actually, core samples from newly placed bituminous pavements) representing each of the four refinery sources were analyzed using widely accepted test methods. These included the EPA Toxic Characteristics Leachability Procedure (TCLP) and related tests to determine the presence and/or amount of volatile and semi-volatile organic compounds, polynuclear aromatics (PNA's) and certain metals. Test results are included.

In summary, no substances tested for in these test groups were observed to be above the stated minimum threshold values in any of the four representative samples. The potential of soil or water contamination arising from the use, storage, or disposal of any of the typical Montana asphalt paving mixtures appears to be minimal.

17. Key Words Salvaged Asphalt Paving Materials, Environmental Soil/Water Impacts, Volatile/Semi-Volatile Organic Compounds, Polynuclear Aromatic Compounds, EPA/TCLP Testing		18. Distribution Statement Unrestricted. This document is available through the National Technical Information Service, Springfield, VA 21161.	
19. Security Classif. (of this report) Unclassified	20. Security Classif. (of this page) Unclassified	21. No. of Pages 26	22. Price

DISCLAIMER

The opinions, findings and conclusions expressed in this publication are those of the authors and not necessarily those of the Montana Department of Transportation or the Federal Highway Administration.

ALTERNATIVE DOCUMENT FORMATS

Persons with disabilities who need an alternative accessible format of this information, or who require some other reasonable accommodation in order to participate, should contact the Montana Department of Transportation, ATTN: Research Manager, 2701 Prospect Avenue, P.O. Box 201001, Helena, Montana, 59620-1001; Telephone Number (406)444-6269; TDD Number (406)444-7696; or Fax Number (406)444-6204.

For more information, contact the Montana Department of Transportation Personnel Services Section at (406)444-3871.

ABSTRACT

The purpose of this sub-study (part of a larger research project on salvaged asphalt) was to investigate the potential for soil and/or groundwater and/or surface water contamination arising from the stockpiling, use, or disposal of salvaged asphalt pavement in Montana. The investigation was keyed to the four asphalt sources generally used in Montana highway pavements, those sources being the four Montana oil refineries. Asphalt from each refinery exhibits unique molecular and chemical attributes. Road surface contamination resulting from vehicular road use was recognized as a factor impacting this study, but was not researched.

Asphalt paving materials (actually, core samples from newly placed bituminous pavements) representing each of the four refinery sources were analyzed using widely accepted test methods. These included the EPA Toxic Characteristics Leachability Procedure (TCLP) and related tests to determine the presence and/or amount of volatile and semi-volatile organic compounds, polynuclear aromatics (PNA's) and certain metals. Test results are included.

In summary, no substances tested for in these test groups were observed to be above the stated minimum threshold values in any of the four representative samples. The potential of soil or water contamination arising from the use, storage, or disposal of any of the typical Montana asphalt paving mixtures appears to be minimal.

TABLE OF CONTENTS

Technical Documentation Page ii

Disclaimer iii

Alternative Document Formats iii

Abstract iv

Table of Contents v

List of Tables and Figures vi

Introduction 1

Asphalt Chemistry 1

Previous Studies 6

Montana Asphalts 10

Considerations Regarding Burial of Asphalt 11

Summary 11

Additional Notes 12

References 13

Appendix A-Test Results 14

LIST OF TABLES AND FIGURES

Figure 1: Crudes Initially Separated By Distillation 3

Figure 2: Examples of Hydrocarbon and Functional Group Types and an Average Molecule of SHRP Asphalt B. 4

Table 1: Polynuclear Aromatic Hydrocarbons in Different Asphalts. 5

Table 2: EPA Tests on TCLP Leachates. 7

ENVIRONMENTAL CONSIDERATIONS IN THE USE OF SALVAGED ASPHALT PAVEMENT

INTRODUCTION

Asphalt cement is a chemically complex material derived from crude petroleum. It has been used for many years to pave thousands of miles of highways. Because of its availability, convenience, relatively low cost and long history of use, to say nothing of the difficulty of determining its chemical composition, we have been rather casual about its potential toxicity. With increasing awareness of hazards to health and the environment, however, asphalt has come under closer scrutiny. The issue with asphalt really arises because of its complexity. What potentially hazardous compounds might be present and in what concentrations and, more important, are they available to the atmosphere, the soil or to groundwater?

Our purpose under this contract has been to investigate the potential for soil and/or water contamination arising from the storage, use or disposal of salvaged asphalt pavement. In the process of searching for information already in the literature, we found that the emphasis has been largely on air quality and on the threat from polynuclear aromatic compounds (also called PNA's or PAH's, polyaromatic hydrocarbons. PNA will be used here). Relatively little has been published on soil or water contamination from asphalt in any form.

In this report, we will discuss briefly a few chemical considerations, followed by notes on the experiences of others with regard to soil/water contamination. The rationale for and results from our investigation will then be presented. Finally, there will be a few comments on the subject of air quality and asphalt safety in general.

ASPHALT CHEMISTRY

The refinery processes by which asphalt is produced are, of course, principally intended to make gasoline, jet fuel and other products--the money-makers for the refiner. A simplified diagram of such a process is shown in Figure 1 (1). The most important thing to notice is that most components of the crude oil which boil below 800°F, including gasoline and diesel fuel, have been removed before the residuum, asphalt, is collected. This asphalt cut-point may vary slightly depending on the crude oil and the processing conditions, but the principle remains, i.e., asphalt is a very high boiling material. It is possible for some molecules with boiling points somewhat below this cut-point to remain in the asphalt if they are tightly associated with other molecules to form even higher-boiling assemblies.

Asphalt is composed mostly of carbon (82-87%) and hydrogen with small amounts of nitrogen (usually <1.0%), oxygen (<1.1%) and sulfur (usually less that 7%) plus small amounts of vanadium, nickel or iron (only asphalts from certain South American sources contain more than a 2-300 parts per million of vanadium). There is a very large number of different kinds of molecules (see Figure 2)--aliphatic, alicyclic and aromatic molecules as well as molecules in which all are combined. Most of the nitrogen seems to be contained in aromatic systems (perhaps pyridine derivatives, but not pyridine itself). Oxygen may be found in a number of functional groups, including ketones, carboxylic acids or esters and aromatic forms whereas sulfur exists in aromatic rings and as sulfides that are readily oxidized to sulfoxide (in aliphatic chains, not as free sulfur oxides). Halogens (chlorine, for example) do not occur naturally in asphalt.

Aromatic molecules are of concern because certain kinds of polynuclear aromatic compounds (PNA's) are known to be carcinogenic. There seems to be little doubt that some of these compounds are present in asphalts with concentrations depending on the asphalt source (Table 1)(2). Nevertheless, the quantities of individual compounds are very small and the total concentrations of PNA's are also low. Further, small quantities of PNA's are present as substituted derivatives, that is, they have additional alicyclic or aliphatic structures attached. There is some question as to whether these substituted PNA's are as carcinogenic as their unsubstituted counterparts. It is also necessary to keep in mind that not all PNA's are considered to be toxic, mutagenic or carcinogenic. In Table 1, we have marked those known to have one or more of these hazardous characteristics.

FIGURE 1

CRUDES INITIALLY SEPARATED BY DISTILLATION

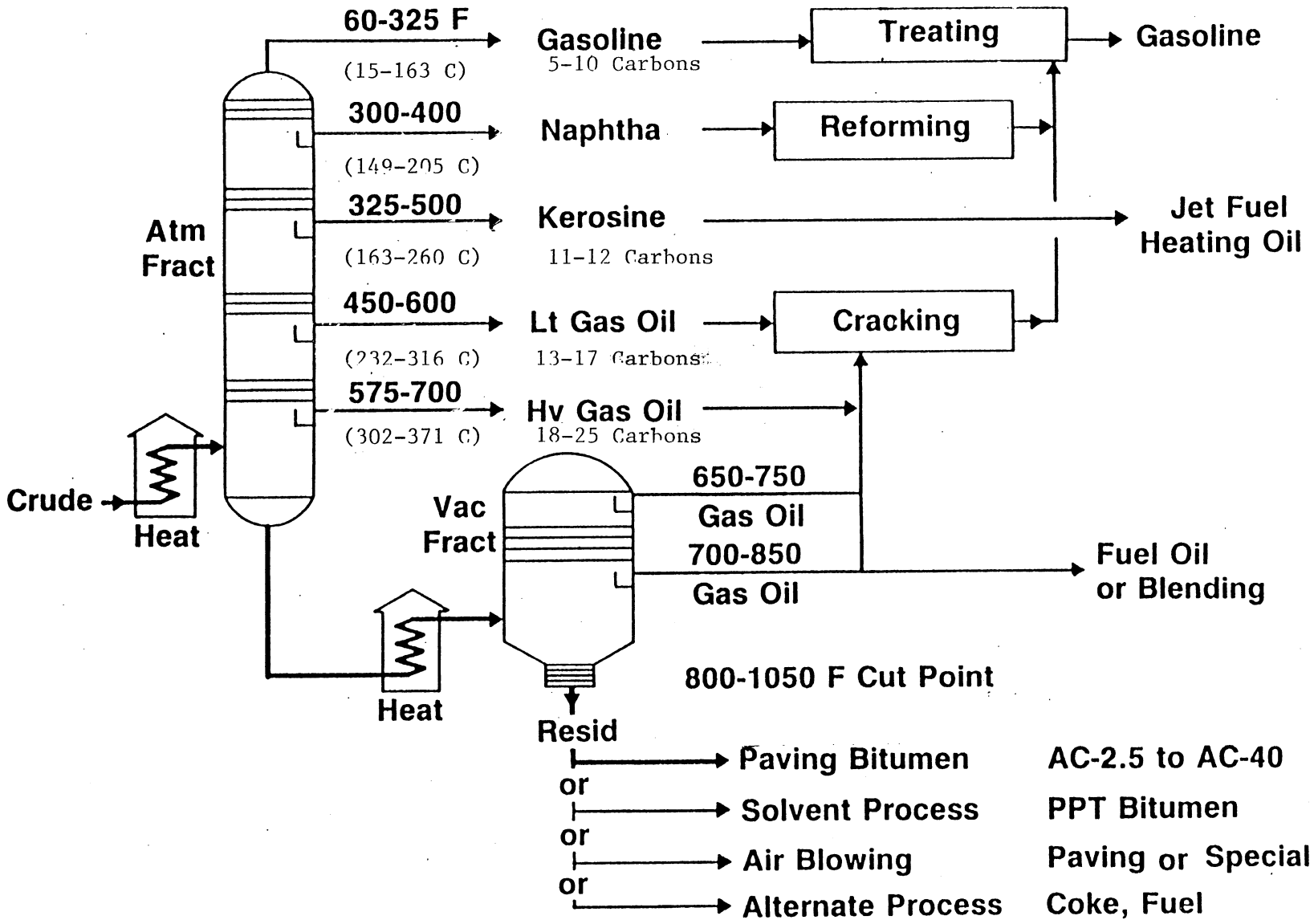

Source: L.W. Corbett, 1984

FIGURE 2

Examples of Hydrocarbon and Functional Group Types and an Average Molecule of SHRP Asphalt B

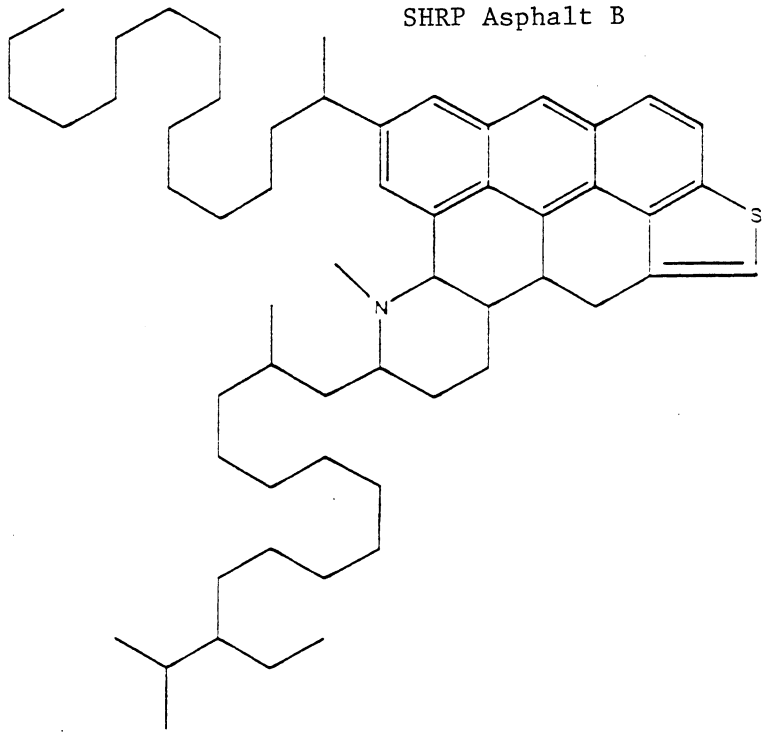

An Average Molecule of SHRP Asphalt B

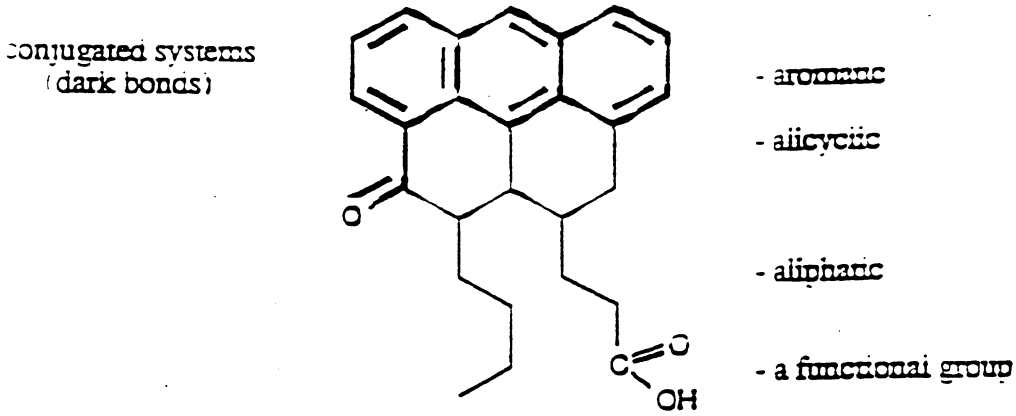

Examples of Hydrocarbon and Functional Group Types

TABLE 1. POLYNUCLEAR AROMATIC HYDROCARBONS IN DIFFERENT ASPHALTS

	<----------Concentration, ppm---------->			
	Asphalt			
Compound	1	2	3	4
a anthracene d	–	–	–	–
a phenanthrene d	2.3(4.5)	0.4(7.5)	35[c]	2.3[c]
a pyrene	0.6(1.2)	1.8(18.0)	38(89)	0.08(0.8)
a fluoranthene	b	b	5(b)	–
a benzofluorenes	b	b	b	–
a benz[a]anthracene g	0.15(1.1)	2.1(46)	35(109)	–(0.05)
triphenylene	0.25(2.4)	6.1(31)	7.6(43)	0.3(0.7)
a chrysene e,g	0.2(4.0)	8.9(101)	34(158)	0.04(0.4)
a benz[a]pyrene e,g	0.5(2.9)	1.7(12)	27(69)	–
benz[e]pyrene h	3.8(11.0)	13(30)	52(141)	0.03(0.06)
a benz[k]fluoroanthene d,e	**(–)	–	–	–
perylene	–	39(9.7)	3.0(–)	–
anthanthrene ?	–	trace	1.8(–)	–
a benz[g,h,i]perylene	2.1(7.4)	4.6(9.4)	15(41)	trace
indeno[1,2,3-c,d]pyrene ?	trace	–	1.0(–)	–
picene	b	b	1.9(b)	–
coronene	1.9(–)	0.8(0.5)	2.8(1.9)	–
TOTAL	11.8(34.5)	78.4(265)	258(652)	2.7(1.24)

Adapted from Table 2.3, Ref. 2
a targeted in EPA analyses
– not detected
b not estimated but present in small amount
c incl. alkyl derivatives
d irritant
e suspected carcinogen
f mutagen
g toxic
h teratogen
? no reference found
() concentrations of substituted derivatives

Lower molecular weight compounds might be volatile and/or leachable. As noted above, asphalt is composed of very high-boiling, high molecular weight components. In pavements, the asphalt has again been subjected to high temperatures during construction so that any volatile materials should have been removed. It is, however, conceivable that some molecules could be mobilized by water. Strictly speaking, water solubility is not very likely because asphalt is highly nonpolar and, therefore, hydrophobic.

PREVIOUS STUDIES

In a review of the literature prepared for SHRP (2), Barksdale cites only two studies addressing the question of soil or water contamination from asphalt. The first of these (3) was intended to demonstrate how much asphalt could be washed from a pavement newly-constructed using emulsified asphalt or standard hot-mix. Rather substantial amounts of asphalt were removed. However, the experiments were poorly designed and are probably of little value. The second study (4) was concerned with the concentrations of PNA's in stormwater runoff. These increased during heavy rainfall and the authors suggest but do not verify that the sources include PNA's washed from the air, washed from road surfaces and leached from asphalt pavement. Thus, neither of these studies helps to resolve our concerns.

The State of Washington has conducted some studies concentrating on runoff which poses a more serious potential problem in the heavy traffic / heavy rainfall environment of the Seattle area (5). The reports on this study have been made available to the MDT and merit attention. However, they are not directly applicable to our present question.

Heritage Research Group for the Indiana and Illinois Departments of Transportation, conducted a series of studies (6-9) which address the question of potential leachates in direct fashion. We shall review these studies carefully in this report because they have not been formally published, to our knowledge.

An asphalt surfacing mixture using an AC-20 asphalt and an aggregate mixture containing slag from steel manufacturing was tested (6). The TCLP (Toxic Characteristic Leachability Procedure) was performed, and standard EPA tests were done for semi-volatile and volatile organic compounds, PNA's and metals. Each of these tests targets a very specific set of compounds or elements (Table 2).

TABLE 2. EPA TESTS ON TCLP LEACHATES

1) Semivolatile materials--method SW846-3510
   - 1,4-dichlorobenzene (flash point 65°C)
   - 2,4-dinitrotoluene (mp 67-70°C)
   - hexachlorobenzene (bp 326°C)
   - hexachlorobutadiene (bp 210°C)
   - hexachloroethane (bp 195°C)
   - nitrobenzene (fp 190°C)
   - pyridine (bp 115°C)
   - cresylic acid (aka cresol--bp 202°C)
   - 2-methyl phenol (aka o-cresol--bp 191°C)
   - 3-methyl phenol (bp 203°C
   - 4-methyl phenol (bp 202°C)
   - pentachlorophenol (bp 310°C)
   - 2,4,5-trichlorophenol (bp 248°C)
   - 2,4,6-trichlorophenol (bp 246°C)

2) Metals--method SW846-3010
   - barium
   - cadmium
   - chromium
   - lead
   - silver
   - arsenic
   - selenium
   - mercury

3) Volatile organic compounds--method SW846-3510
   - benzene (bp 80°C)
   - carbon tetrachloride (bp 77°C)
   - chlorobenzene (bp 132°C)
   - 1,2-dichloroethylene (bp 32°C)
   - 1,1-dichloroethylene (bp 48°C)
   - methyl ethyl ketone (bp 80°C)
   - tetrachloroethylene (bp 121°C)
   - trichloroethylene (bp 87°C)
   - vinyl chloride

(Continued)

TABLE 2. CONTINUED.

4) Polynuclear aromatic compounds--method SW846-8310

- naphthalene (bp 217°C)
- acenaphthalene (bp 280°C)
- acenaphthene (bp 279°C)
- fluorene (bp 298°C)
- anthracene
- fluoranthene (bp 384°C)
- pyrene
- benz[a]anthracene (bp 438°C)
- chrysene (bp 448°C)
- benz[b]fluoranthene
- benz[k]fluoranthene
- benz[a]pyrene (bp 495°C)
- dibenz[a,h]anthracene (bp 524°C)
- benz[g,h,i,]perylene (bp >500°C)
- indeno[1,2,3-c,d]pyrene

Several important points should be made regarding these lists. First, they contain compounds or elements which are known to be harmful to the environment or to animals and humans. Second, none of the metals of concern is found naturally in asphalt. Likewise, chlorine is not a natural component of asphalt. Further, you will note that none of the compounds listed as volatile or semi-volatile has a boiling point above 326°C. Thus, if asphalt is that portion of petroleum boiling above 400°C, then such materials would be likely to have been distilled away unless they were very tightly associated with other components to make an even higher-boiling assembly of molecules. (The 400° temperature is an approximation and may vary depending on the crude stock and grade of the asphalt being produced.)

For the surfacing mentioned above, chromium was detected and is believed to arise from the steel slag used as part of the aggregate. At a concentration of 0.10 ppm, that is below the regulatory "hazardous" level of 5 ppm. However, it does point out the need to be cautious about the odd kinds of materials used in paving. For all remaining organic compounds except naphthalene, no amounts above detectable limits were found. Naphthalene was present at 0.25 ppb, well below any guidelines.

In the next study, "Evaluation of RAP for use as a Clean Fill" (Jan., 1991) (7), six RAP samples representing different asphalt and aggregate sources were analyzed using TCLP and tests for semivolatiles, metals and PNA's. No semivolatile compounds above detectable limits were found in any sample. Naphthalene (0.49 ppb) and acenaphthene

(0.14 ppb) were found at site #1; 0.30 ppb naphthalene at site #2; benz[a]anthracene (0.017 ppb) and benz[k]fluoranthene (0.05 ppb) at site #5. Very small amounts of barium, chromium or lead were found at some of the sites, but none was near the regulatory limit. These are site specific and may result from surface contamination (eg., tire composition, crankcase oils including worn engine metals, lead from gasoline).

In March, 1992, Heritage issued a report, "Leachability of Asphalt and Concrete Pavements" (8), on a study intended "to determine the suitability of using concrete, asphalt or soils from the surrounding roadway as clean fill". In the TCLP leachates from asphalt concrete pavements samples taken at different sites across the road profile, naphthalene concentrations between 0.26 and 0.31 ppb were found; from the roadside soil, 0.76 ppb naphthalene was detected. Except for one example of phenanthrene at 0.30 ppb, no other PNA's were found above detectable limits. Kriech notes that naphthalene is present in measurable amounts in both crankcase oils and tire compositions. Barium levels between 2.6 and 3.7 ppm were found in all but one pavement sample and in the soil sample.

A study titled "Leachability of Cold Mix Asphalts" (Nov., 1992) (9) is particularly important since it involves emulsified and cutback asphalts. These materials are somewhat different from hot-mix asphalts and are often stockpiled. Heritage investigated an asphalt emulsion, AE-150, an MC-3000 cutback and a CM-150 cold mix multigrade, modified gelled asphalt using the same battery of tests. No metals, semi-volatile or volatile compounds were detected. Several PNA's were detected (all values in ppb):

	AE-150	MC-3000	CM-150
acenaphthene	0.41	--	2.7
naphthalene	4.4	8.0	14
fluorene	1.8	0.34	1.0
phenanthrene	1.3	0.74	1.1
anthracene	0.14		0.090
fluoranthene			0.19
pyrene			0.10

Kriech states that the levels are well below any known regulatory requirements.

Obviously, the asphalt and aggregate supplies available in Indiana and Illinois, where the Heritage studies were conducted, are different from those available in Montana. Therefore, we felt it necessary to test local materials. This work will be described in the next section.

MONTANA ASPHALTS

With few exceptions, Montana asphalt pavements are constructed with material from just four refineries: Cenex, Conoco, Exxon and Montana Refining. Therefore, since any salvaged asphalt is likely to represent one of these refineries, we wanted to include all four in our testing. In 1983, a series of test sections were constructed on I-90 near Big Timber. We have a large collection of samples from these pavements. We selected a set for testing for the following reasons:

1) includes all four refineries,
2) samples were not aged in the pavement, and so represent a "worst case" in that any lower molecular weight components would be likely to remain in the sample,
3) because all are of the same age, a fair comparison can be made among the refineries;
4) the same aggregate source was used throughout, thus eliminating this as a variable.

In choosing pavement samples which have not seen service in pavement, we have eliminated the possibility of observing materials resulting from surface contamination. (You will note that occurrences of such molecules as naphthalene in the Heritage Group's samples probably come from tire wear and crankcase drippings.) Since these materials do not derive from the asphalt, since they are available to the environment with every rain-event on the pavement, and since, even in the heavy-traffic environment of Indiana and Illinois, such molecules are found only in very small concentrations, this seems a reasonable choice. If a spill of hazardous material were to occur on a pavement, appropriate testing should be done before recycling or otherwise disposing of that pavement.

The TCLP is the best procedure to use when trying to determine what materials might leach from a sample in the field. It represents a "worst case" with regard to acid rain because low pH water is used as the solvent. Considering arguments made earlier and the experience of the Heritage Group, there seemed to be no reason to conduct the testing for the presence of the volatile or semivolatile compounds targeted by EPA. But we did want to test for metals and PNA's. In addition, we elected to test for the presence of "diesel-range organics", or "total extractable hydrocarbons". The rationale for this test is that some organic compounds, not necessarily considered to be hazardous in the usual sense but certainly undesirable in surface or ground water, could be mobilized in the leaching process. The compounds detected by the test have an approximate molecular weight range of 100 to 400 (about 10 to 28 carbon atoms).

Thus, we submitted samples to Energy Laboratories, Inc., in Billings for TCLP, PNA, metals and diesel-range organic procedures. Copies of the results are appended to this report. In summary, no leachable polynuclear aromatic compounds above detectable

levels were observed in samples from any of the four refineries. Similarly, no hydrocarbons above detectable limits were extracted from any of the samples. Also, none of the metals targeted in the test were observed.

These results are, of course, reassuring. This is particularly true of the asphalt from the Cenex refinery in which we have observed a rather unusual composition that we thought might include elevated levels of aromatic compounds. We must caution, however, that answers to questions not asked are not found. That is, these tests respond only to the level of knowledge available at this time.

CONSIDERATIONS REGARDING BURIAL OF ASPHALT

Leaching of asphalt components is an obvious potential means of introducing undesirable materials into the environment. However, we questioned what the consequences of bacterial action upon buried asphalt might be. We found that there is active research on this topic as it is related to using asphalt concrete in containment vessels for low-level atomic waste (10-12). In general, researchers have found that bacterial activity does occur, that the aliphatic compounds are metabolized to carbon dioxide and water (aerobically), and that the rate of consumption is extremely slow (so slow that using this material to store these wastes is considered to be practical). It does not appear that toxic substances are formed, although that question is not addressed directly.

SUMMARY

Asphalt cement is composed of a multitude of high-boiling organic compounds, predominantly aromatic, aliphatic and alicyclic hydrocarbons, with small amounts of nitrogen, oxygen and sulfur. Only small quantities of vanadium, nickel or iron are present is most cases. No chlorine occurs naturally in asphalt. Polynuclear aromatic compounds, some of which are known to be toxic and/or carcinogenic, have been found in small amounts in whole asphalts. In studies conducted by Heritage Research Group for the Indiana and Illinois Departments of Transportation, only a few PNA's were observed in the TCLP leachates from some of the hot mix asphalt pavement samples, and always at concentrations less than 1 part per billion. Volatile and semivolatile organic compounds targeted in EPA tests were not found.

Pavements constructed with asphalt from each of the Montana refineries were subjected to the TCLP procedure and analyzed for leachable PNA's, metals and diesel-range organics. No leachable materials above detectable limits were observed in any of these categories in any of the samples. This is significant because the vast majority of Montana pavements which might be candidates for salvage will have been constructed with asphalts from these four refineries. Thus, it appears that contamination of water by

organic compounds leached from reclaimed hot mix asphalt pavement when it is stockpiled or used as shoulder cover is not likely, considering present tests and standards.

ADDITIONAL NOTES

It was mentioned earlier that most of the work regarding potential hazards from asphalt concentrates on exposure of humans and the environment to paving asphalt emissions. There are also studies regarding direct contact of asphalt with the skin. This body of work seems to have been thoroughly reviewed for SHRP (2).
However, we are aware of a more recent development in California which we want to bring to the attention of the Highways Division.

When paving with polymer-modified asphalts under a property-based specification, workers on some (not all) projects experienced a variety of problems, including eye, nose and throat irritation, headache and nausea. As California is well aware, a specification such as they have for modified material allows the supplier to use an unknown number of possible blends. The supplier must solve some very practical problems--polymers do not necessarily combine easily with asphalts, especially to make a stable mixture. Moreover, the properties of the mixture may be such as to make the paving process very difficult, if not impossible. Therefore, the producer may use a "carrier" of some kind. In conducting a literature search to answer a different question, I noted a variety of possibilities, including tall oil, tung oil, long-chain fatty acid amines, gas oil, "aromatic" oils, used motor oil and even more exotic materials.

Similarly, a variety of polymers could be used and, although one would expect them to be heat-stable, there is a possibility that the polymer contains unreacted monomer or short polymer chains that could be volatile.

California has not yet pinpointed the source of the problem. They have issued respirators to their personnel and have suggested to contractors that they make respirators available to their workers on polymer-modified and rubber-asphalt paving projects. If modified materials are to be used in Montana, it seems wise to be aware of this potential and to have some contingency plans for coping with the situation.

REFERENCES

1) L.W. Corbett, "Refinery Processing of Asphalt Cement", presented at Transportation Research Board meeting, 1984.

2) R.M. Barksdale, et al., "Summary of Health Practices: the Use of Petroleum Asphalt in the Hot-Mix Paving Industry", 1993, Strategic Highway Research Program, SHRP-A-650.

3) L.J. Nielson, et al., "Water Solubles Removed from Surfaces Stabilized with Emulsified Asphalt", J. Water Pollution Control Fed., (1969) 41 297.

4) M.R. Osborne, et al., in Benzopyrenes, Cambridge University Press, NY, 1987.

5) Entranco, "Stormwater Runoff Management", for Washington State Department of Transportation, 1992.

6) A.J. Kriech, "Evaluation of Hot Mix Asphalt for Leachability", Heritage Research Group, Oct., 1990.

7) A.J. Kriech, "Evaluation of RAP for Use as a Clean Fill", Heritage Research Group, Jan., 1991.

8) A.J. Kriech, "Leachability of Asphalt and Concrete Pavements", Heritage Research Group, Mar., 1992.

9) A.J. Kriech, "Leachability of Cold Mix Asphalts", Heritage Research Group, Nov., 1992.

10) N. Ait-Langomanzio, et al. "Microbial Degradation of Bitumen", Experientia, (1991) 47 533.

11) L.P. Buckley, et al., "Microbial Activity on Bituminized Radioactive Waste", Radioact. Waste Mgmt. Nucl. Fuel Cycle, (1985) 6 19.

12) T.K. Jones, "Effect of Bacteria and Fungi on Asphalt", Matls. Protection, (1965) Dec. 39.

APPENDIX A

TEST RESULTS

ENERGY LABORATORIES

ENERGY LABORATORIES, INC.
P.O. BOX 30916 • 1107 SOUTH BROADWAY • BILLINGS, MT 59107-0916 • PHONE (406) 252-6325
FAX (406) 252-6069 • 1-800-735-4489

LABORATORY REPORT

TO: Joan Pribanic
ADDRESS: Montana State University
Dept. of Chemistry & Biology
Bozeman, MT 59717-0340

LAB NO.: 94-16753
DATE: 05/27/94 jmw

WASTE ANALYSIS

EXXON
MSU-IJ-T-1A&B, Sample #1
Submitted 04/21/94
Extracted 05/02/94
Analyzed 05/24/94

Extraction Method: EPA Method 3510
Amount Extracted: 760 ml
Analysis Method: EPA Method 8310

Compound	µg/l
Naphthalene	<0.2
Acenaphthylene	<0.2
Acenaphthene	<0.2
Fluorene	<0.2
Phenanthrene	<0.1
Anthracene	<0.1
Fluoranthene	<0.1
Pyrene	<0.1
Benzo(a)anthracene	<0.01
Chrysene	<0.1
Benzo(b)fluoranthene	<0.01
Benzo(k)fluoranthene	<0.01
Benzo(a)pyrene	<0.02
Dibenzo(a,h)anthracene	<0.02
1,12, Benzoperylene	<0.02
Indeno-1,2,3-c,d pyrene	<0.02

COMPLETE ENVIRONMENTAL ANALYTICAL SERVICES

ENERGY LABORATORIES

ENERGY LABORATORIES, INC.
P.O. BOX 30916 • 1107 SOUTH BROADWAY • BILLINGS, MT 59107-0916 • PHONE (406) 252-6325
FAX (406) 252-6069 • 1-800-735-4489

LABORATORY REPORT

TO: Joan Pribanic
ADDRESS: Montana State University
Dept. of Chemistry & Biology
Bozeman, MT 59717-0340

LAB NO.: 94-16750
DATE: 05/27/94 jmw

WASTE ANALYSIS

CENEX
MSU-IJ-T-6A&B, Sample #6
Submitted 04/21/94
Extracted 05/02/94
Analyzed 05/24/94

Extraction Method: EPA Method 3510
Amount Extracted: 970 ml
Analysis Method: EPA Method 8310

Compound	µg/l
Naphthalene	<0.2
Acenaphthylene	<0.2
Acenaphthene	<0.2
Fluorene	<0.2
Phenanthrene	<0.1
Anthracene	<0.1
Fluoranthene	<0.1
Pyrene	<0.1
Benzo(a)anthracene	<0.01
Chrysene	<0.1
Benzo(b)fluoranthene	<0.01
Benzo(k)fluoranthene	<0.01
Benzo(a)pyrene	<0.02
Dibenzo(a,h)anthracene	<0.02
1,12, Benzoperylene	<0.02
Indeno-1,2,3-c,d pyrene	<0.02

COMPLETE ENVIRONMENTAL ANALYTICAL SERVICES

ENERGY LABORATORIES

ENERGY LABORATORIES, INC.
P.O. BOX 30916 • 1107 SOUTH BROADWAY • BILLINGS, MT 59107-0916 • PHONE (406) 252-6325
FAX (406) 252-6069 • 1-800-735-4489

LABORATORY REPORT

TO: Joan Pribanic
ADDRESS: Montana State University
Dept. of Chemistry & Biology
Bozeman, MT 59717-0340

LAB NO.: 94-16751
DATE: 05/27/94 jmw

WASTE ANALYSIS
MRC
MSU-IJ-T-10A&B, Sample #10
Submitted 04/21/94
Extracted 05/02/94
Analyzed 05/24/94

Extraction Method: EPA Method 3510
Amount Extracted: 970 ml
Analysis Method: EPA Method 8310

Compound	µg/l
Naphthalene	<0.2
Acenaphthylene	<0.2
Acenaphthene	<0.2
Fluorene	<0.2
Phenanthrene	<0.1
Anthracene	<0.1
Fluoranthene	<0.1
Pyrene	<0.1
Benzo(a)anthracene	<0.01
Chrysene	<0.1
Benzo(b)fluoranthene	<0.01
Benzo(k)fluoranthene	<0.01
Benzo(a)pyrene	<0.02
Dibenzo(a,h)anthracene	<0.02
1,12, Benzoperylene	<0.02
Indeno-1,2,3-c,d pyrene	<0.02

COMPLETE ENVIRONMENTAL ANALYTICAL SERVICES

ENERGY LABORATORIES

ENERGY LABORATORIES, INC.
P.O. BOX 30916 • 1107 SOUTH BROADWAY • BILLINGS, MT 59107-0916 • PHONE (406) 252-6325
FAX (406) 252-6069 • 1-800-735-4489

LABORATORY REPORT

TO: Joan Pribanic
ADDRESS: Montana State University
Dept. of Chemistry & Biology
Bozeman, MT 59717-0340

LAB NO.: 94-16752
DATE: 05/27/94 jmw

WASTE ANALYSIS
CONOCO
MSU-IJ-T-15A&B, Sample #15
Submitted 04/21/94
Extracted 05/02/94
Analyzed 05/24/94

Extraction Method: EPA Method 3510
Amount Extracted: 970 ml
Analysis Method: EPA Method 8310

Compound	µg/l
Naphthalene	<0.2
Acenaphthylene	<0.2
Acenaphthene	<0.2
Fluorene	<0.2
Phenanthrene	<0.1
Anthracene	<0.1
Fluoranthene	<0.1
Pyrene	<0.1
Benzo(a)anthracene	<0.01
Chrysene	<0.1
Benzo(b)fluoranthene	<0.01
Benzo(k)fluoranthene	<0.01
Benzo(a)pyrene	<0.02
Dibenzo(a,h)anthracene	<0.02
1,12, Benzoperylene	<0.02
Indeno-1,2,3-c,d pyrene	<0.02

COMPLETE ENVIRONMENTAL ANALYTICAL SERVICES

ENERGY LABORATORIES

ENERGY LABORATORIES, INC.
P.O. BOX 30916 • 1107 SOUTH BROADWAY • BILLINGS, MT 59107-0916 • PHONE (406) 252-6325
FAX (406) 252-6069 • 1-800-735-4489

LABORATORY REPORT

TO: Joan Pribanic
ADDRESS: Montana State University
Dept. of Chemistry & Biology
Bozeman, MT 59717-0340

LAB NO.: 94-16753
DATE: 05/27/94 jmw

WASTE ANALYSIS

MSU-IJ-T-1A&B, Sample #1
Submitted 04/21/94
Extracted 04/21/94

TOXICITY CHARACTERISTIC LEACHING PROCEDURE
EPA SW-846 METHOD 1311

Metals	CAS No.	Regulatory Limit, mg/l	Minimum Reporting Limit, mg/l	Result, mg/l in Extract	Spike Percent Recovery	Date Analyzed
Arsenic	7440-38-2	5.0	0.5	<0.5	105	04/27/94
Barium	7440-39-3	100.0	10.0	<10	91	04/25/94
Cadmium	7440-43-9	1.0	0.1	<0.1	90	04/25/94
Chromium	7440-47-3	5.0	0.5	<0.5	95	04/25/94
Lead	7439-92-1	5.0	0.5	<0.5	88	04/25/94
Mercury	7439-97-6	0.2	0.02	<0.02	109	04/26/94
Selenium	7782-49 2	1.0	0.1	<0.1	113	04/27/94
Silver	7440-22-4	5.0	0.5	<0.5	81	04/25/94

COMPLETE ENVIRONMENTAL ANALYTICAL SERVICES

ENERGY LABORATORIES

ENERGY LABORATORIES, INC.
P.O. BOX 30916 • 1107 SOUTH BROADWAY • BILLINGS, MT 59107-0916 • PHONE (406) 252-6325
FAX (406) 252-6069 • 1-800-735-4489

LABORATORY REPORT

TO: Joan Pribanic
ADDRESS: Montana State University
Dept. of Chemistry & Biology
Bozeman, MT 59717-0340

DATE: 05/27/94 jmw

WASTE ANALYSES
TCLP EXTRACTS

Submitted: 04/21/94

Identification Lab No.	Date Extracted	Date Analyzed	Diesel Range Organics (mg/liter (ppm))	Diesel Range Organics as Diesel (mg/liter (ppm))	Total Extractable Hydrocarbons (mg/liter (ppm))	(1) Surrogate Recovery, %
MSU-IJ-T-6A&B, Sample #6						
94-16750	04/26/94	04/28/94	<2.5	<2.5	<2.5	97
MSU-IJ-T-10A&B, Sample #10						
94-16751	04/26/94	04/29/94	<2.5	<2.5	<2.5	91
MSU-IJ-T-15A&B, Sample #15						
94-16752	04/26/94	04/29/94	<2.5	<2.5	<2.5	74
MSU-IJ-T-1A&B, Sample #1						
94-16753	04/26/94	04/28/94	<2.5	<2.5	<2.5	76
Method Blank	04/26/94	04/28/94	<2.5	<2.5	<2.5	82

COMMENTS:

(1) Surrogate added to the sample for quality assurance purposes.

NOTE1: Diesel Range Organics are defined as all hydrocarbons eluting between C10 and C28.

NOTE2: Diesel Range Organics as Diesel Fuel are defined by the analyst as that portion of the chromatogram between C10 and C28 that resembles diesel fuel.

NOTE3: Total Extractable Hydrocarbons are defined as the total hydrocarbon responses regardless of elution time. This value is equivalent to EPA method 8015 Modified TPH as Diesel.

File No. 16750-3

COMPLETE ENVIRONMENTAL ANALYTICAL SERVICES