UTCM

Improving the Quality of Life by Enhancing Mobility

University Transportation Center for Mobility™

DOT Grant No. DTRT06-G-0044

Teen Driver Cell Phone Blocker

Final Report

Mark Benden, Rainer Fink and James Stafford

Performing Organization
University Transportation Center for Mobility™
Texas Transportation Institute
The Texas A&M University System
College Station, TX

Sponsoring Agency
Department of Transportation
Research and Innovative Technology Administration
Washington, DC

Texas Transportation Institute

UTCM Project #10-15-47
February 2012

Technical Report Documentation Page

1. Project No. UTCM 10-15-47	2. Government Accession No.	3. Recipient's Catalog No.
4. Title and Subtitle Teen Driver Cell Phone Blocker		5. Report Date February 2012
		6. Performing Organization Code Texas Transportation Institute
7. Author(s) Dr. Mark Benden, Dr. Rainer Fink, and James Stafford		8. Performing Organization Report No. UTCM 10-15-47
9. Performing Organization Name and Address University Transportation Center for Mobility™ Texas Transportation Institute The Texas A&M University System 3135 TAMU College Station, TX 77843-3135		10. Work Unit No. (TRAIS)
		11. Contract or Grant No. DTRT06-G-0044
12. Sponsoring Agency Name and Address Department of Transportation Research and Innovative Technology Administration 400 7th Street, SW Washington, DC 20590		13. Type of Report and Period Covered Final Report January 1, 2010–December 31, 2011
		14. Sponsoring Agency Code
15. Supplementary Notes Supported by a grant from the US Department of Transportation, University Transportation Centers Program		

16. Abstract

This study was a randomized control intervention to measure the effectiveness of a cellular phone control device that communicates with the vehicles of teen drivers to deny them access to their phone while driving for the purpose of reducing distraction-related negative driving events. Investigators developed and manufactured working samples of the patent-pending cell phone disabling device from the Texas A&M Health Science Center (HSC). The intention was to provide 100 of the devices to families with a newly licensed teen driver. Half of the devices were to be distributed in an urban area (Houston) and the other half in a rural area (Brenham). The 50 participating families and teenagers in each group were to be compared to 50 of their peers (newly licensed teen drivers) who did not receive and install the cell phone disabling device. In total, there were to be 200 teen drivers participating in the project with 100 participants per group: 50 with the device and 50 without the device. Following unforeseen development cost issues and dramatic changes in the target cellular phone market, the HSC device was abandoned for a commercial device already on the market. The comparison with this device was conducted using pre- and post-surveys of parents regarding driving records of teens in both the control (n = 26) and treatment (n = 72) groups. We analyzed vehicle, crash, and moving violation data. Qualitative data were collected in the form of surveys and analyzed using statistical software. Post-surveys of parents and teens were taken at inception and 1 year after the teen entered the study. Surveys inquired about teen involvement in traffic crashes, awareness of performance decrements, attitudes toward the device, issues with usability and quality, and marketability of the device. Due to technology problems, dramatic dropout rates (54% at 12 months), and low initial participation rates, results were limited to conclusions related to the strong resistance of this market to cell phone inhibiting devices and the challenges associated with implementing them on a large scale.

17. Key Word Teenage Drivers, Accident Prone Drivers, Cellular Telephones, Highway Safety, Distraction, Driver Licenses, Graduated Licensing, Houston (Texas), Research Projects, Safety and Human Factors, Education and Training		18. Distribution Statement Public distribution	
19. Security Classif. (of this report) Unclassified	20. Security Classif. (of this page) Unclassified	21. No. of Pages 50	22. Price n/a

Form DOT F 1700.7 (8-72) Reproduction of completed page authorized

Teen Driver Cell Phone Blocker

by

Dr. Mark Benden
Associate Professor
Texas A&M Health Science Center
School of Rural Public Health
Department of Environmental and Occupational Health

and

Dr. Rainer Fink
Associate Professor
Texas A&M University
Department of Engineering Technology & Industrial Distribution

and

James Stafford
Graduate Research Assistant
Texas A&M Health Science Center
School of Rural Public Health
Department of Environmental and Occupational Health

Prepared for:

University Transportation Center for Mobility™
Project #10-15-47

University Transportation Center for Mobility™
Texas Transportation Institute
The Texas A&M University System
College Station, TX 77843-3135

February 2012

Disclaimer

Acknowledgment

Support for this research was provided in part by a grant from the U.S. Department of Transportation, University Transportation Centers Program to the University Transportation Center for Mobility™ (DTRT06-G-0044), in-kind equipment donations from Safe Driving Systems LLC, and the Engineering Technology Department Texas A&M University.

Table of Contents

List of Figures

NOTE: Some color figures in this report may not be legible if printed in black and white. A color PDF copy of this report may be accessed via the UTCM website at http://utcm.tamu.edu or on the Transportation Research Board's TRID database at http://trid.trb.org.

List of Tables

Executive Summary

According to the National Highway Traffic Safety Administration (NHTSA), the percentage of drivers using handheld cell phones while driving has remained consistent over most of the last decade, hovering around 5%. When these figures are broken down by age, a greater percentage of drivers between the age of 16 and 24 use a cell phone while driving (United States Department of Transportation [US DOT], 2010b). The NHTSA also reports that 5,474 people were killed and 448,000 people were injured in 2009 due to distracted driving. Among those killed in distracted-driving-related crashes, 18% were due to cell phone use, while only 4% of the injuries related to distracted driving involved cell phone use. Of all fatal crashes in 2009, 16% involved distracted driving. Distracted driving resulted in 16% of fatal crashes involving drivers under the age of 20 (US DOT, 2010a). Research by Wilson and Stimpson reinforces the fact that distracted driving is a growing trend. Their research shows that between 2005 and 2008, distracted driving fatalities increased by 28%, and the greatest percentage of drivers involved in distracted driving fatalities were among 16-29 year olds. The data also show that distracted driving fatalities occur more often in rural areas than in urban centers (Wilson & Stimpson, 2010). Additionally, research has shown that in automobile crashes where driver error was cited as the cause, teenage drivers were responsible 79.3% of the time, which accounts for 75.8% of all crashes involving teen drivers. Recognition errors or those involving inadequate surveillance and/or distracted driving accounted for 46.3% of the total teen driver-error-related crashes (Curry, Hafetz, Kallan, Winston, & Durbin, 2011).

A literature review of distracted driving related to teenagers was conducted by McKenzie Henry as a master's thesis; she identified 76 articles on the topic (Henry, 2011). Of the 76 articles, only seven used a teen population for data collection, two designated parental status, and five included both urban and rural populations. Twenty articles used texting while driving as a behavior performed while driving, while only six studies measured this behavior. A majority of the studies identified (33) recommend that administrative controls should be implemented to reduce distracted driving among teenagers. Twenty-one articles discussed technological controls. Of these, only four identified signal and/or text blocking as a means of control. None of the studies identified used actual field trials to evaluate the efficacy of signal blocking technology. This could be due to the fact that this is an emerging technology in its infancy.

In the face of the mounting data, we decided to test the efficacy of a cell phone interruption device. If such a device were found to be successful, it would be the tool that could be used to protect the lives of young people across the country. The initial plan was to develop an interrupter from the ground up. In the initial prototype, a battery was developed that replaced the original manufacturer's battery. Our phone battery linked wirelessly to a transponder mounted in the vehicle that would power off the battery while the automobile was in operation. This device would work with any make or model of phone that had access to the battery. In the 2 years it took to develop this system, cell phone technology increased rapidly. By the time we were ready to move forward, smartphones had taken over the market, and phones like the iPhone have no access to the battery. This severely limited the effectiveness of the device. A solution that was discussed was that the study would provide the phone and pay

for the service so the device could be used. This alternative proved to be too costly. It was at this point we decided the best course of action would be to search the market and find the best available cell phone interruption technology that worked in a similar manner to our device but could be used on various phones already owned by potential participants.

The device that was chosen was developed by Safe Driving Systems LLC and is referred to as the Key2SafeDriving system. This system involves downloading software to the driver's phone and installing a transponder into the onboard diagnostics version II (OBD II) port in the driver's vehicle. This transponder communicates wirelessly with the phone when the vehicle is started. The software then places the phone in "safe mode," which blocks all incoming phone calls and text messages except for the three emergency numbers encoded into the software when it is installed. Inbound and outbound calls can be made to the emergency numbers when the vehicle is in operation. The phone will revert to normal operation when the vehicle is shut off. The transponder and software are tamper proof in that the administrator (parent) will receive a text message when the device is initially operational and any time the transponder is removed or altered.

A tremendous effort was made to recruit the required study pool. Initially, the recruiting efforts focused on high-school-aged teen drivers. To reach potential participants, a driving school, high school administrations, the Texas Department of Public Safety (DPS), and parent teacher organizations (PTOs) were contacted. Our meetings with parents and school administrators were met with initial enthusiasm. We were encouraged by this initial willingness to participate, and we anticipated that our efforts would be successful. When it came time to commit to the study and enroll teen drivers, parents were reluctant to participate. Due to this lack of participation, we shifted our recruiting efforts to focus on college-aged teen drivers up to 19 years of age at Texas A&M University. To accomplish this, we reached out to and had meetings with the leaders of 17 student organizations that were either specifically designed for freshman leadership or that had a large freshman membership. In addition to this effort, flyers were placed in lecture halls and gathering places around campus. To incentivize groups and individuals, a monetary reward of $1000 was offered to groups and $100 to individuals for participation. This amount was advertised in meetings and on flyers around the Texas A&M campus. These efforts were met with little enthusiasm, and the few who did express interest did not have a cell phone that was compatible with our chosen technology.

Part 1: Device Development

Introduction and Market Research

Distracted driving is a problem that has many consequences including loss of life. Distracted driving causes over 600,000 car crashes, 300,000 injuries, and 2,500 deaths per year and costs an estimated $43 billion dollars to society. Creation of a usable device based on the patent-pending technology of Dr. Benden and Dr. Fink of Texas A&M was the primary focus of the first phase of this University Transportation Center for Mobility (UTCM) project.

The cost to build the device was on the order of $10 in large quantities. Initial market research suggested that the product could be sold to parents in the range of $50-$90 and to small-vehicle fleets for less than $100. Furthermore, vehicle-monitoring companies suggested that they could increase their service fees by as much as 40%, indicating that prices for licensing could be as much as $50 per unit. Given the lack of reduction in texting and cell phone use while driving and despite significant increases in legislation against it, this type of device may prove to be the most reliable form of intervention available to us until cars can drive autonomously.

Research showed the market size as:

- Teen drivers—12.2 million teen drivers with cell phones.
- Small-vehicle fleets—60-75 million commercial sport utility vehicles (SUVs) and pick-ups.
- Large-vehicle fleets—10 million large DOT-regulated trucks.

At the time of this project, there were three classes of competing technologies in this space:

1. Service-side and GPS-based products—Presently, the major carriers have the technology to disable cell phones during certain times but are not yet offering it to the public. However, the technology exists such that products could use either the built-in global positioning system (GPS) in the phone or cell tower triangulation to determine when the cell user is in motion. All communication would be deactivated until motion stopped. These devices would affect commuters on trains and busses in addition to drivers.
2. Application-based products—These products use programs or applications that run on smartphones that sense vehicle motion and deactivate texting and/or talking capabilities. Typically, monthly service charges apply. The products only work on certain smartphones and offer the ability to easily bypass or circumvent the system.
3. Less prevalent products—There are more specific products including jamming technologies that interfere with the actual transmission of cellular signals, as well as key-in-phone devices where the vehicle key must be inserted into the phone in order to use it. Jamming devices are against the law, and key-in-phone devices are not widely supported by phone manufacturers.

Initial market research indicated that we could license our product to fleet-monitoring-style equipment manufacturers. Additionally, research of both the teen market and small-vehicle

fleet markets suggested that there is an urgent need for these types of products. Retail channels such as battery stores had also indicated an initial willingness to carry this type of product. Manufacturing could be easily outsourced, as most cell phone batteries are already outsourced to Asian suppliers. Time to market was estimated to be as short as 2 months. It was hoped that this study would provide the needed evidence to convince both parents and fleet safety officers of its efficacy. Governmental regulations and public opinion were changing in favor of limiting cell phone usage while driving. There was clearly a societal problem with distracted driving, and this product offered a practical, cost-effective, and intuitive solution.

Device Development

In the initial phase of our study, our team needed to create a device that had the capability of interrupting a driver's cell phone while the vehicle was in operation. To accomplish this, we teamed with the Engineering Technology Department at Texas A&M University to build and test a prototype of this patent pending device based on our design (Appendix A). Our design called for a module that would be inserted into a vehicle's OBD II port. This module would then communicate wirelessly with a custom battery module in the driver's cell phone. The vehicle module would relay data to the cell phone about whether or not the vehicle was in gear or how fast it was traveling (Figure 1-2). The owner of the cell phone could pre-program the battery module to tell it when to shut the phone off or put it into airplane mode based on gearing or speed data from the vehicle module. As part of this project, we also had to create a graphic user interface (GUI) that would allow the user to view the activity of the device, set or update features on the device, and defeat detection. The functional requirements of the GUI included simulating the vehicle module so the user could select which OBD II port the module would be placed in, a database control that was password protected and required a personal identification number (PIN) to view or edit the database, and an option for the user to view and clear any battery removal events stored in the MSP430 (Figures 3-4). The specifications for the battery module were that it should have a maximum dimension of 60 mm x 35 mm x 5 mm. The battery module should also be powered by the 3.7 V cell phone battery and only look for a connection and update its status every 15 seconds using low power modes. This was built in to ensure the module was not a significant drain on the cell phone battery. The battery module also needed to be capable of detecting its removal and log that event. To accomplish this, two contacts were placed on the battery module, and a trace was placed on the battery cover (Figure 5). Lastly, the battery module had to be able to interpret OBD II data from the vehicle module and shut the phone off at the proper time.

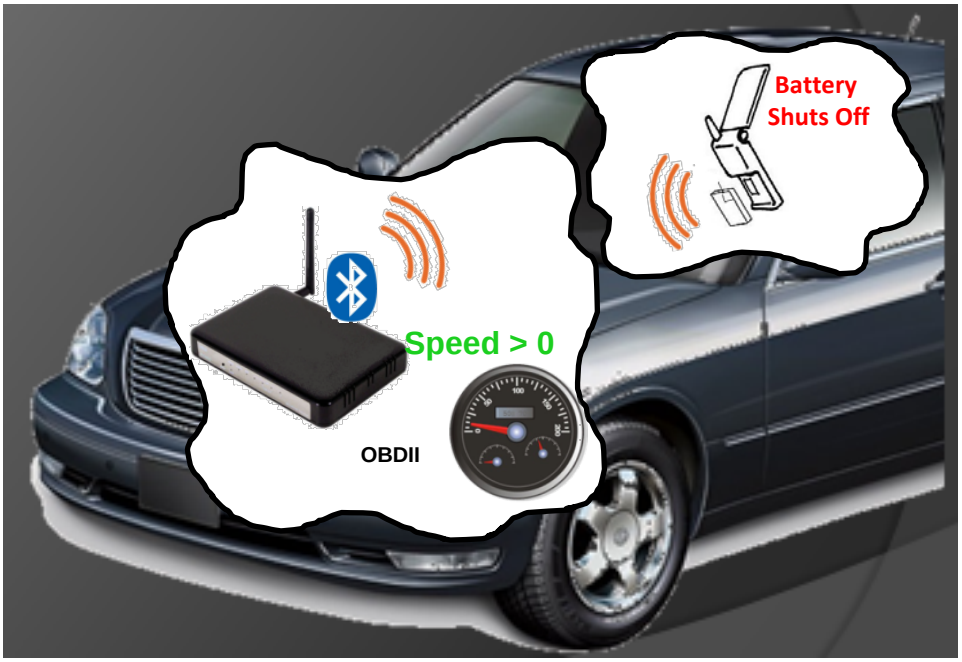

Figure 1. Component Illustration.

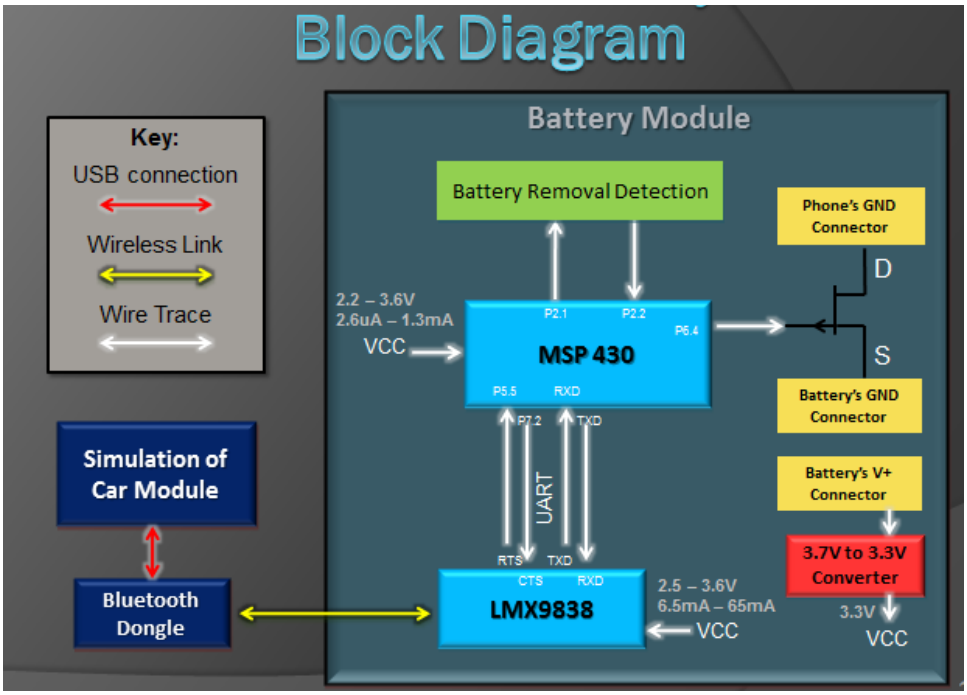

Figure 2. Block Diagram

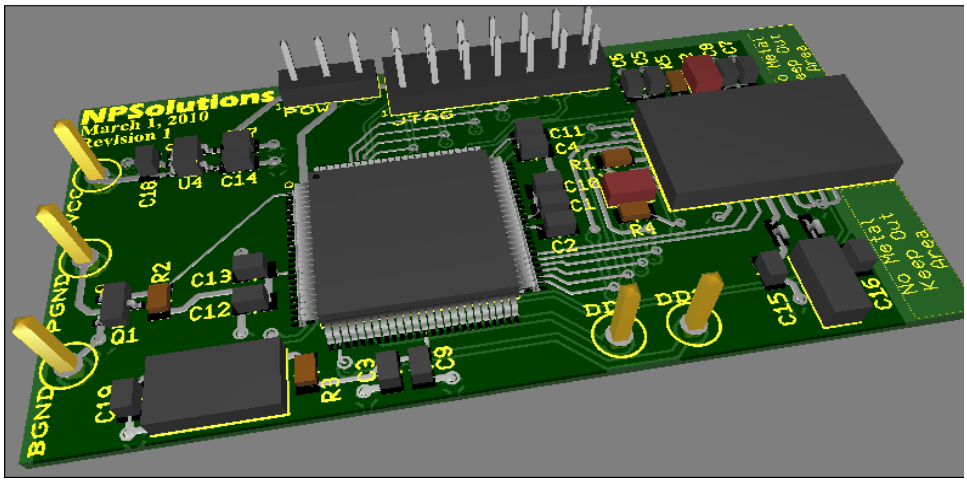

Figure 3. Initial Printed Circuit Board (PCB) Layout

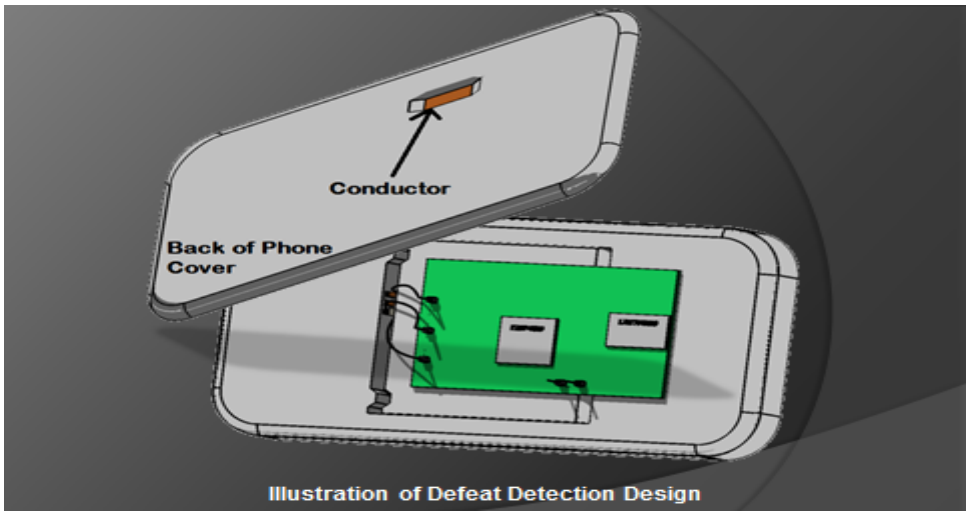

Figure 3. Illustration of Defeat Detection

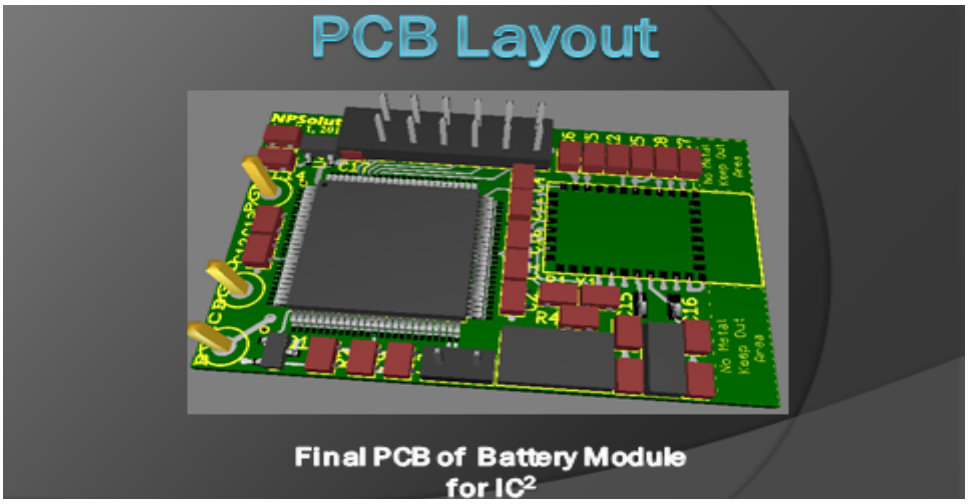

Figure 5. Final PCB Layout

As one would expect, there were some challenges we faced when creating the necessary software. The challenges included initializing, connection pairing, connecting, and data transfer/processing. The challenges with initialization involved the MSP430 and the GUI. During the initialization phase with the MSP430, we experienced problems with the universal asynchronous receiver/transmitter (UART), real-time clock, timer B, and programmable pins. Challenges associated with the GUI involved the graphics, enable/disable buttons, and communication port. Connection pairing is used to send out a device inquiry. It returns the device class and wireless address, and if the device class matches, it stores the wireless address for all future connections. The advantage of connection pairing is that it is easy for all users to set up, and the user needs no knowledge of wireless technology to use the device. The disadvantage is that the connections are difficult to re-pair. In order to connect the modules, a function is called by the timer B interrupt every 15 seconds, and it tries to connect via the wireless dongle. If this is accomplished, the MSP430 sends the connect command, and then the devices connect. After this occurs, the MSP430 gets a confirmation message, and a connected flag is set. This same process is used to set a transparent flag. During data transfer/processing, the receive interrupt is active during low power mode. During this mode, all messages are stored in a circular queue buffer that holds four complete messages. During the timer B interrupt, all of the queued messages are read. After reading each message, the appropriate response is used. For example, if the message is an update speed message, the speed will be updated.

Device Testing

In order to determine the functionality of the software, tests were run to evaluate each part of the system, and a test matrix was created, which can be seen in Figure 6. The data storage test was used to determine whether or not the data that were required to be stored on the GUI had the timestamps of when an attempt was made to defeat the device by removing the battery. The procedure for this test was to create a timestamp on the MSP430, initiate a link between the battery module and the GUI, and then check the GUI for timestamps. If the GUI's database displayed and held the timestamps, the test was passed; otherwise, the test was failed. Defeat detection was in place to detect when the battery cover of the phone was removed in an attempt to beat the system. The procedure to test this function required a conductor to be placed across the DD1 and DD2 connectors, the MSP430 to be programmed and ready to go, and the conductor to be removed from the connectors. If the MSP430 recognized the break in, the test was passed. We tested the password capabilities of the software by attempting to log in to the GUI using several invalid username and password configurations. If the system did not allow access but did allow access when the correct password was entered, then the system passed. The radio data system (on) (Rds(on)) test was performed to ensure the metal-oxide-semiconductor field-effect transistor (MOSFET) had minimal resistance and therefore a minimal voltage drop across it. This allowed the cell phone to receive close to full power from the cell phone battery. To perform this test, MOSFET had to be isolated, and then the positive terminal of a power supply was set to 3.3 V, Direct Current was connected to Pin 1, and the ground was attached to Pin 2. This allowed a multi-meter to measure the resistance across the drain and source terminals. If the resistance was between 0.155 and 0.16 Ohms, the test passed. To test

the communication between the battery module and the GUI, we created a timestamp on the battery module by breaking the connection of the defeat detection pins. We then brought the battery module within range of the computer so a connection could be made that would initiate the transfer process. If the GUI obtained the correct timestamp, the test was passed. A simulation test was run to ensure that if there was a communication error, the malfunction did not involve the link between the dongle and the simulation. To perform this test, we loaded the simulation software and inserted the wireless dongle into the correct USB port. Next, we opened and set up the HyperTerminal to 9600 bps and selected the correct port and initiated communication. If the two devices were able to communicate, the test was passed. The synchronization test involved determining if a successful connection could be made between the battery module and the wireless dongle. To perform this test, we inserted the wireless dongle into the USB port, and then the battery module was brought within 3 m of the dongle. If the test were successful, one light-emitting diode (LED) would turn off. The regulator was tested to ensure the dropout voltage was 0.4 V, as stated in the datasheet. Using a power supply, we applied 6.5 V to Pin 1 and 3 and used a multi-meter to measure the voltage at Pin 5, which was the output of the regulator. If the output value was 3.3 V, the test was passed. Next, we performed functional testing of the cell phone to ensure that it would turn off when it was supposed to, and vice versa. To perform this test, we set up the device, hooked up the phone, loaded a simulation, loaded the GUI, turned on the phone, and tested its functionality. To help with this test, we used the truth table shown in Figure 7.

Test Matrix

TESTS	Functional Requirements				
	Communication Requirements	Defeat Detection	Graphical User Interface	Power Requirements	Transistor Switch
Data Storage Test			x		
Defeation Detection		x			
GUI Password Protection			x		
Rds(on) Test					x
BM and GUI Communication	x				
Sim. and Dongle Communication	x				
Synchronization	x				
Dropout Voltage				x	
Full System Functionality	x	x	x	x	x
Battery Shut-Off			x		x

Figure 4. Device Testing Matrix

Input Signal	Battery Module
TXD = none	On
TXD = V (of car) = 0	On
TXD = V (of car) > 0	Off

Figure 5. Device Testing Truth Table

The GUI is designed to allow the user to test the shut-off functionality of the cell phone battery. In order to test this capability, we loaded the GUI, synced the phone with the GUI, and sent a shut-off signal. If the phone turned off, the test was passed. Throughout the development process, we encountered problems with the hardware, software, and PCB that were eventually resolved.

Transition

After testing was complete on our prototype, we started to attempt to recruit participants and began small-scale production of our interrupter device. Our initial market research was sound, but during the prototype development process, we found that the market had shifted in a way that did not make it possible to use our device. Smartphones, especially the iPhone™, changed the cell phone market, and our device could not compete in this market due to the increased capacity of this technology and the fact that the iPhone™ did not allow access to the battery compartment. To continue down the path of using our technology would have meant that we would have had to purchase a compatible phone and associated service plan and then give the phone to the participant to keep. In general, potential participants were not willing to downgrade their phone or plan, and parents were not willing to push this on their teens. When the economic feasibility of this option was investigated, it was clear we did not have enough room in our budget to cover all of these costs. It was at this point that we realized that for this project to have any chance of evaluating an in-situ intervention as planned, we needed to look for cheaper, alternative technologies for interrupting cell phones in vehicles.

Part II: Use of Existing Technology

New Technology

After the decision was made to transition to a technology that would not only meet our needs but also fit in our budget, an exhaustive search was initiated and the decision was made to partner with Safe Driving Systems LLC (SDS). Key2SafeDriving is the SDS product we decided to use because this technology interrupts cell phone activity similarly to our prototype. This product consists of a car module (Figure 8) that is placed in a vehicle's OBD II port and communicates with software downloaded on a cellular device wirelessly. We were able to make an arrangement with SDS to receive the necessary number of devices. The

Key2SafeDriving technology connects with the driver's cell phone when the car is started. When the car is placed in gear, the proprietary software is engaged on the phone, and the phone is placed in safe mode. In this mode, the driver is not able to read or send any text message. Drivers can view inbound calls, but they cannot answer or dial a new number unless it is one of three emergency contacts. When the vehicle is parked and turned off, the software disengages the phone, and it returns to normal operation. The biggest limitation with the use of this technology was that it was not initially compatible with the most popular phone models. When we chose the device, it was compatible with most non-smartphones and the Blackberry™. Assurances were made that this technology would be compatible with Android™ and iPhone™ software in the future. The technology was not compatible with Android™ software until April 2011 and at the time of this report was still not compatible with iPhone™ software.

Figure 8. Safe Driving Systems Activator

Methodology

After receiving Institutional Review Board (IRB) approval through Texas A&M, we sought to recruit 50 teenage drivers from an urban center and 50 teenage drivers from a rural center. These teens would then have software installed on their phone and a device placed in their car that would interrupt the usage of the phone while the car was running. We planned to recruit 100 control subjects from the same areas. The teen drivers would then proceed with their normal driving activity for a year, and we would be able to analyze real-world data with those using the device and those not using the device. It was our intention to evaluate the effectiveness of this type of technology in preventing accidents and ticket rates, when compared to the overall accident and ticket rates amongst teen drivers.

A website was developed with the Texas Transportation Institute (TTI) that was used as a central hub for information about the study. The website contained pertinent information about the study including who could qualify, compatible phones, frequently asked questions, online versions of the surveys that were being used to collect data. An initial, 6-month, and 12-month survey was developed to gather data relating to automobile crashes and tickets issued to the parents of teenaged drivers and directly to college aged drivers during the 12 months

while the device was being used. The initial survey contained general information about the driver and his or her phone, and it also asked questions about any accidents the teen driver had been in as well as any tickets he or she had received. This survey was used to screen potential participants to ensure the device would be compatible with their phones. A copy of the survey that was used can be found in Appendix B. The willing participants who did not have compatible phones were to be used as control subjects.

Recruiting

In an attempt to execute the study as planned, every effort was made to recruit participants. Initially, our recruiting efforts focused on teenagers aged 15 to 17 who were still in high school. To reach potential participants, a driving school, high school administrations, the Texas DPS, and PTOs were contacted. The high schools included Navasota High School, Caldwell High School, Hearne High School, A&M Consolidated High School, Rudder High School, Brenham High School, and Cy Fair High School. We made presentations to the A&M Consolidated PTO, Brenham PTO, and Rudder PTO. We contacted the Texas DPS in an effort to post information about our study at its office where teenagers would see the information when they registered for their driver's license. The Texas DPS was responsive and allowed us to post flyers in its Bryan, Texas, office. The driving school did not respond to our request. The high schools and PTOs initially saw the merit of our study and seemed to be willing to participate. A total of 124 parents filled out initial surveys, and 26 agreed to participate as treatments.

The initial level of enthusiasm amongst administrators and parents that initially led us to believe we would be able to recruit an adequate number of participants never materialized. A variety of reasons were given for non-participation. They included the teen driver having a phone that was incompatible with the software, resistance from the teen driver, the parent's unfounded fear of not being able to reach his or her child, and a fear that if in an accident, the child would not be able to call for help. The latter two reasons for not participating were not valid because the device that was used allows for three emergency numbers to be programmed into the software, and the phone will allow the user to dial out to these emergency numbers and the emergency numbers to call into the phone while it is in safe mode. This led us to believe the true reasons people would not participate were the parents' unwillingness to force their children to participate and people's strong bond with technology, making them unwilling to give it up even in the face of data that say it can be detrimental to their health or life.

The limitation of the software was another major hurdle that we could not overcome. The reality is that this type of software is in its infancy, and it cannot be used with all types of phones. The major fault with the technology is that Apple will not allow any software that interrupts functionality to be installed on its products. This eliminates a large majority of people who would be willing to participate due to the popularity of the iPhone™. Phones powered by Android™ software only became compatible in April 2011 (well beyond our required start date). Thus, we were unable to recruit people that had two of the most popular phones on the market to participate.

In January 2011, it was realized that simply focusing on teen drivers aged 15 to 17 was not going to get the required number of participants for this study. It was at this point that we shifted our focus to include college freshmen 18 to 19 years of age. To accomplish the goal of getting 100 participants in this study, recruiting efforts focused on student organizations at Texas A&M University that had a large number of freshman members. Student organizations are a big part of student life at Texas A&M, and there are many organizations geared toward freshmen, known as freshman leadership organizations (FLOs). The FLOs that we attempted to recruit participants from included the Aggie Fish Club, Aggies Selflessly Serving in Shaping Tomorrow, Fish Aides, Fish Council, Freshmen Aggies Spreading Tradition, Freshmen Leaders in Christ, Freshmen Leaders in Progress, Leaders in Freshmen Engineering, Memorial Student Center Aggie Leaders of Tomorrow, MSC Freshmen in Service and Hosting, Freshmen Leadership Experience, Freshmen Liberal Arts Reaching Excellence, MSC Freshman Leaders International, and Progressively Reaching Excellence in Professionalism. In addition to these organizations, attempts were made to recruit from CARPOOL, which is an organization dedicated to giving people who have consumed alcohol a free and safe ride home, and the Residence Hall Association. These organizations were presented information as to why the study was being performed, its merits, and the prerequisite for inclusion. There was a small budget allotted to recruiting, and we made proposals to the organizations that would include donations based on the number of participants they could provide. We advertised a participation payment of $100 per participant up to a total of $1000 per organization that was willing to participate. In addition to our presentations to student organizations, we posted flyers across campus in buildings where classes with mostly freshmen were held. These efforts proved fruitless in that not one organization wanted to use the study as a fundraiser, and only a handful of students individually indicated interest by visiting the website. None of these students participated as treatments. The feedback we received was that people did not want to give up the use of their phone while driving, the 1-year commitment was too long, and the incentive to do so was not great enough.

Survey Results

Based on our recruiting efforts, we were able to attain 124 respondents to our initial survey. Table 1 contains the number of respondents to our initial survey and the number of participants remaining at the time of the 6- and 12-month surveys for the control and treatment groups. Table 2 displays data collected from the initial survey. The average age of the respondent was 16.7 years old, and the majority were male (60%). Figure 9 presents the percentage of respondents by their age. The larger percentage of high-school-age participants is reflective of the fact that parents had a role in the decision-making process on whether or not to participate, and thus we were able to gather more responses from younger drivers compared to the college-age teen drivers, whose complete reports were negligible and thus not included in these totals. An interesting data point is that every single respondent had a cell phone, and 90% drove a dedicated vehicle. One of the issues we faced during this project was the rise of smartphones. This can be evidenced by the fact that 72% of the respondents had a data plan associated with their cell phone and 98% had a texting plan. Only 4% of respondents were ruled ineligible due to incompatibility with their vehicle (lack of OBD II port on older

models). Figure 10 shows a breakdown of the type of cell phone owned by each participant. The majority of respondents had an Apple, Samsung, or "other" type of phone. At the time of the survey, 15% of the teen driver respondents reported that they had been cited for a speeding or moving violation, and 38% reported that they had been in a traffic accident.

Table 1. Number of Participants Completing a Survey at each Node

Survey Node	Number of Respondents
Initial Screening Survey for Prospective Participants*	124
Control Group 6-Month Survey	26 of 34 invited
Treatment Group 6-Month Survey	72 of 90 invited
Control Group 12-Month Survey	12
Treatment Group 12-Month Survey	39

*Each of the 124 initial survey respondents was invited to be in the control or treatment group.

Table 2. Initial Survey Results

Gender of teen driver		
Male	74	60%
Female	50	40%
Total	124	100%
Does the teen currently have a dedicated vehicle to drive?		
Yes	112	90%
No	12	10%
Total	124	100%
Does the teen driver have their own personal cell phone?		
Yes	124	100%
No	0	0%
Total	124	100%
Does the teen's cellular service include a data plan?		
Yes	89	72%
No	35	28%
Total	124	100%
Does the teen's cellular service include a texting plan?		
Yes	121	98%
No	3	2%
Total	124	100%
Does the parent's cell phone have a texting plan?		
Yes	121	98%
No	3	2%
Total	124	100%
Has the teen driver ever been involved in a crash/accident/fender-bender while they were driving?		
Yes	47	38%
No	77	62%
Total	124	100%

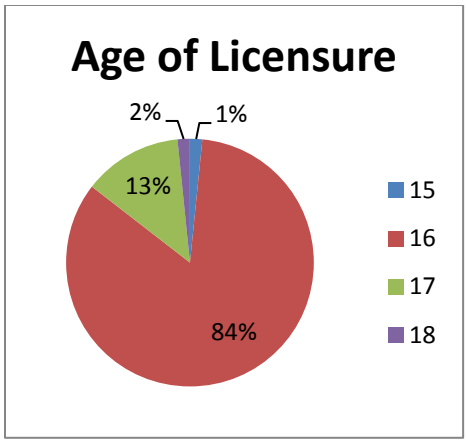

Figure 9. Age of Licensure

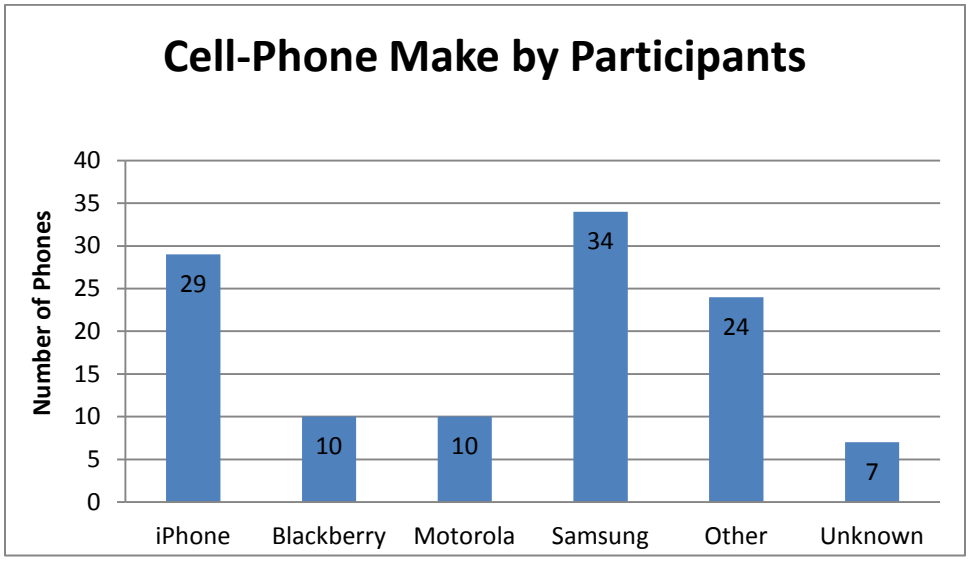

Figure 10. Cell Phone Make by Participant

Table 3 displays data generated from our control and treatment groups at the time of 6 and 12 months when surveys were given to participants. In our control group, we started with 72 participants. By the time the 12-month surveys were completed, we retained only 39 participants, which was a retention rate of 54%. The control group was roughly divided equally among males and females. We did see an increase in the percentage of moving violations among the control group over the span of the project (7% vs. 13%), but the number of violations was identical and differences were not significant at alpha = 0.05. The same trend was seen among car accidents in the control group over the same time period of 0-12 months. Car accidents increased from 4% to 5% from 6 to 12 months, but the actual number of car crashes decreased from three to two and again was not significantly different.

During the same time period, we were able to recruit 26 individuals to install a device and participate in our treatment group. As was the case in the control group, the male-to-female ratio in the treatment group was roughly 50%. At the end of the project, we had a retention rate of 46% among the treatment group. At the 6-month survey point, 6% of the participants in the treatment group had received a moving violation. This figure increased by 3% when the 12-month survey was conducted. While this figure increased on a percentage basis, the actual number of citations received decreased by one (for a smaller sample), which was similar to the trend we saw among the control group. At the time of the 6-month survey, no teen using our interrupter device had been in a car accident, and only one car accident was reported by the treatment group during the breadth of this project.

Table 3. Six- and 12-Month Survey Results for Control and Treatment Groups

	6-Month Treatment	6-Month Treatment	6-Month Control	6-Month Control	12-Month Treatment	12-Month Treatment	12-Month Control	12-Month Control
Gender of teen driver								
Male	12	46%	35	46%	6	50%	20	52%
Female	14	54%	37	54%	6	50%	19	48%
Total	26	100%	72	100%	12	100%	39	100%
Has your teen ever received any of the following violations in the past 6 or 12 months?								
Yes	2	6%	5	7%	1	9%	5	13%
No	24	94%	67	93%	11	91%	34	87%
Total	26	100%	72	100%	12	100%	39	100%
Has your teen been involved in an auto crash while driving during the past 6 or 12 months?								
Yes	0	0%	3	4%	1	9%	2	5%
No	26	100%	69	96%	11	91%	37	95%
Total	26	100%	72	100%	12	100%	39	100%
At the end of 6 months, was your teen still using the cell phone interruption device provided?								
Yes	20	80%	N/A	N/A	6	50%	N/A	N/A
No	6	20%	N/A	N/A	6	50%	N/A	N/A
Total	26	100%	N/A	N/A	12	100%	N/A	N/A

Table 4. Odds Ratios

6-Month Survey—Tickets Received			
	Treatment	Control	Total
Yes	2	5	7
No	24	67	91
Total	26	72	98
		OR	1.12
12-Month Survey—Tickets Received			
	Treatment	Control	Total
Yes	1	5	6
No	11	34	45
Total	12	39	51
		OR	0.62
6-Month Survey—Involved in an Accident			
	Treatment	Control	Total
Yes	0	3	7
No	26	69	91
Total	26	72	98
		OR	0
12-Month Survey—Involved in an Accident			
	Treatment	Control	Total
Yes	1	2	3
No	11	37	48
Total	12	39	51
		OR	1.68

Unfortunately, due to the high dropout rates in both groups, the low number of participants, and the vast inequality in control and treatment participation rates, none of the odds ratios had significant values of $p < 0.05$ (Table 4).

Conclusions

The impact areas of this research were two-fold. First, a viable, patent-pending method of interrupting cell phone communications while driving was developed and validated. This proved to be the most valuable and informative portion of the research. Second, and perhaps most interesting to the public, we applied a variant of that basic, Cell-Phone Interruption Device approach in a field test with drivers in a longitudinal study to evaluate its impact on traffic citations and crashes. The data from this study were less conclusive and actually created more behavioral and compliance questions for future research than they were able to answer. In simple terms, the device was technically ideal for its desired intent but tactically ineffective in real-world deployment. It was ineffective both in our ability to have paid and unpaid

volunteers opt into receiving a free device to use and for those that did opt in to stay opted in to its use over the course of 1 year. That failure of the technology to be deployed and to stay deployed is of note for legislators, law enforcement, and corporations looking to mandate and then enforce certain cell-phone-related behaviors while driving. What part of the fabric of our lives have these devices become, and what definition of our relationship to them, short of addiction, will best describe the state of existence between us as we move forward?

We can continue to ask distracted driving questions in labs and simulators and on closed courses, but until we find ways to influence those driving behaviors (legislation has not yet proven effective) under actual road conditions, our consequences and participation rates will advance. As we strive for a future where vehicles are able to drive themselves autonomously, we must continue to search for methods to improve driver focus and attention in a constantly evolving world of technological distractions. Additional figures can be found in Appendix C, and a full accounting of the literature review can be found in Appendix D.

References

Allen, J. P., & Brown, B. B. (2008). Adolescents, peers, and motor vehicles: The perfect storm? [Supplemental material]. *American Journal of Preventive Medicine*, 35(3, Supplement 1), S289-S293.

Braitman, K. A., Kirley, B. B., McCartt, A. T., & Chaudhary, N. K. (2008). Crashes of novice teenage drivers: Characteristics and contributing factors. *Journal of Safety Research*, 39(1), 47-54.

Caird, J. K., Willness, C. R., Steel, P., & Scialfa, C. (2008). A meta-analysis of the effects of cell phones on driver performance. *Accident Analysis & Prevention*, 40(4), 1282-1293.

Consiglio, W., Driscoll, P., Witte, M., & Berg, W. P. (2003). Effect of cellular telephone conversations and other potential interference on reaction time in a braking response. *Accident Analysis & Prevention*, 35(4), 495-500.

Curry, A., Hafetz, J., Kallan, M., Winston, F., & Durbin, D. (2011). Prevalence of teen driver errors leading to serious motor vehicle crashes. *Accident Analysis and Prevention*, 1285-1290.

Foss, R. D., Goodwin, A. H., McCartt, A. T., & Hellinga, L. A. (2009). Short-term effects of a teenage driver cell phone restriction. *Accident Analysis & Prevention*, 41(3), 419-424.

Graham, R., & Gootman, J. A. (2008). Preventing teen motor crashes: Contributions from the behavioral and social sciences and summary of the Report of the National Research Council and Institute of Medicine [Supplemental material]. *American Journal of Preventive Medicine*, 35(3, Supplement 1), S253-S257.

Hancock, P. A., Lesch, M., & Simmons, L. (2003). The distraction effects of phone use during a crucial driving maneuver. *Accident Analysis & Prevention*, 35(4), 501-514.

Hedlund, J. (2007). Novice teen driving: GDL and beyond. *Journal of Safety Research*, 38(2), 259-266.

Henry, M., Benden, M., Smith, M.L., Congleton, J. (2011). Texting While Driving Behaviors Among Teens and Methods of Control: A Literature Review. Unpublished Master's Thesis

Horrey, W. J., Lesch, M. F., & Garabet, A. (2008). Assessing the awareness of performance decrements in distracted drivers. *Accident Analysis & Prevention*, 40(2), 675-682.

Horrey, W. J., & Wickens, C. D. (2006). Examining the impact of cell phone conversations on driving using meta-analytic techniques. *Human Factors*, 48(1), 196-205.

Ishigami, Y., & Klein, R. M. (2009). Is a hands-free phone safer than a handheld phone? *Journal of Safety Research*, 40(2), 157-164.

Lee, J. D. (2007). Technology and teen drivers. *Journal of Safety Research*, 38(2), 203-213.

Lee, J. D. (2008). Fifty years of driving safety research. *Human Factors*, 50(3), 521-528.

Lee, J. D. (2009). Can technology get your eyes back on the road? *Science*, 324(5925), 344-346.

Lee, J. D., & Strayer, D. L. (2004). Preface to the special section on driver distraction. *Human Factors*, 46(4), 583-586.

McGehee, D. V., Raby, M., Carney, C., Lee, J. D., & Reyes, M. L. (2007). Extending parental mentoring using an event-triggered video intervention in rural teen drivers. *Journal of Safety Research*, 38(2), 215-227.

Simons-Morton, B., & Ouimet, M. C. (2006). Parent involvement in novice teen driving: A review of the literature [Supplemental material]. *Injury Prevention*, 12(suppl_1), i30-37.

Simons-Morton, B. G., Ouimet, M. C., & Catalano, R. F. (2008). Parenting and the young driver problem [Supplemental material]. *American Journal of Preventive Medicine*, 35(3, Supplement 1), S294-S303.

US DOT. (2010a). *Distracted driving 2009.* Retrieved May 23, 2011, from http://www.distracteddriving.gov/research/PDF-Files/Distracted-Driving-2009.pdf

US DOT. (2010b). *Driver electronic use in 2009.* Retrieved May 23, 2011, from http://www.distracteddriving.gov/research/PDF-Files/Driver-Electronic-Device-Use-2009.pdf

Wilson, F., & Stimpson, J. (2010). Trends in fatalities from distracted driving in the United States, 1999 to 2008. *American Journal of Public Health*, 2213-2219.

Winston, F. K., & Senserrick, T. M. (2006). Competent independent driving as an archetypal task of adolescence [Supplemental material]. *Injury Prevention*, 12(suppl_1), i1-3.

Wogalter, M. S., & Mayhorn, C. B. (2005). Perceptions of driver distraction by cellular phone users and nonusers. *Human Factors*, 47(2), 455-467.

Appendix A: Device Patent Application Text Only

For figures visit USPTSO.org.

ATTORNEY DOCKET NO. PATENT APPLICATION

130466.00014

DRAFT APPLICATION FOR A&M TAMUS 2957

PRIVILEGED AND CONFIDENTIAL – ATTORNEY-CLIENT COMMUNICATION

For Use and Review of Authorized A&M Personnel – DO NOT FORWARD

In order to preserve the privileged nature of this document, it should be used and reviewed only by authorized A&M personnel with a need to know.

Managing Operability of Communication Devices Based on Vehicle Status

BACKGROUND

Field of the Disclosure

[0001] The present disclosure relates to managing operability of communication devices based on vehicle status.

Description of the Related Art

[0002] Mobile devices (e.g., mobile phones) may be a distraction if used by the driver of a vehicle.

DESCRIPTION OF THE EXEMPLARY EMBODIMENTS

[0003] While using an electronic communication device, it may be difficult for a user to safely perform other tasks such as driving a vehicle. In some cases, the status of the vehicle may affect whether it is considered safe to use the electronic communication device. For example, it may be considered safe for a driver to operate the electronic communication device when the vehicle is parked. However, it might be considered unsafe for the driver to operate the electronic communication device when vehicle is in gear.

[0004] Inexperienced drivers may require more restrictions regarding the use of communication devices while operating a vehicle. The parent of a child driver may wish to restrict the use of the child's communication device while the child is driving. Accordingly, disclosed systems may temporarily deactivate or disable the child's communication device while the child is in a vehicle that may require the undivided attention of the child. In the same manner, an employer may wish to limit employee access to electronic devices while the employee operates a fleet or other vehicle during work hours as part of his/her normal duties. Typical job types of current concern to industry fleet safety programs include but are not limited to bus drivers, taxi drivers, train drivers, long-haul truck drivers, and sales professionals en route to sales calls.

[0005] In some cases, more than one communication device may be present in a vehicle while the vehicle is in a condition that requires the undivided attention of the driver. In such cases, disclosed systems may be configured to only deactivate or disable the communication device for the driver. If the location of the communication device can be determined within the vehicle, disclosed systems may only deactivate or disable any communication device that is in or around the driver seat. Accordingly, some disclosed systems may determine the location of a communication device within a vehicle. If the communication device is located in the backseat of a vehicle, disclosed systems may permit use of the communication device. However, if the communication device is located in or around the driver, the communication device may be temporarily deactivated or disabled.

[0006] In situations in which a vehicle may simultaneously contain multiple communication devices, disclosed systems may be configured to selectively deactivate some communication devices within the vehicle while allowing the operation of other communication devices based on the identity of the user of the communication device. For example, a parent may configure a disclosed system to allow operation of the parent's communication device while disallowing the use of the child's communication device. Accordingly, a parent or administrator could use his or her communication device while inside of an operating vehicle, but could restrict the use of communication devices by other users such as children or other passengers. In some systems, functionality of the communication device may be limited only while the vehicle is in a condition that is considered to require the undivided attention of the driver.

[0007] Disclosed systems may affect the operability of communication devices by affecting whether the devices receive battery power. To affect whether a communication device receives battery power, a hardware switch may be installed electrically between the battery and the remainder of the communication device. If a safe vehicle condition is detected, disclosed systems may close the hardware switch to permit battery power to reach the communication device. In other cases, if an unsafe vehicle condition (e.g., the vehicle transmission is in drive or the engine is running) is detected, a hardware switch may be opened to prevent the communication device from receiving any battery power. (We really are not proposing going into these, as these are currently covered thru other Internet Protocol on non-commercialized approaches. They either have FCC restrictions [jamming is illegal] or are by design part of cell phone manufacturers' or carriers' product offering and therefore prohibitive for them to produce since they would infer that a better approach for safety is needed. This would be a liability nightmare for them.)

[0008] A communication device may include a so-called smart battery that manages how the communication device charges and otherwise uses the battery. Such a battery may contain onboard processors and logic that affect when a communication device has access to the battery's stored power. In such cases, disclosed systems may communicate with the smart battery to affect operability of the communication device, by affecting whether the battery provides power to the communication device under certain vehicle conditions.

[0009] Disclosed systems can affect operability of electronic communication devices based on the status of a vehicle as determined by an onboard diagnostic system located within or communicatively coupled to the vehicle. Onboard diagnostics (OBD) refers to vehicle self-diagnostic and reporting systems that provide vehicle owners or repair technicians access to operational information for vehicles and vehicle subsystems. Some OBD systems provide warnings to vehicle operators and provide an indication of the nature of any problems with the vehicle. In addition to providing visible warnings such as warning lights, OBD systems may use digital communication ports and provide real-time data. In some embodiments, a standardized series of diagnostic trouble codes and status codes are provided and allow monitoring and troubleshooting of vehicle systems.

[0010] The OBD II specification is common among vehicles sold in the United States. The OBD II specification outlines a particular diagnostic connector and its electrical pin arrangement, the electrical signaling protocols to be used, and the formats for messaging. The OBD II specification also provides standardized diagnostic trouble codes, which allow a single diagnostic device to communicate with the onboard computers of multiple vehicles regardless of the manufacturer of the vehicle. In some devices, a standard OBD II hardware interface includes a 16 pin, J1962 connector and is located on the driver side of the passenger compartment near the center console. Disclosed systems may operate and be configured according to the OBD II specification to allow compatibility with a large number of vehicles.

[0011] Apart from the electrical pin arrangements and other variables related to an OBD II system, the OBD II specification includes many protocols that can be used for communication. For example, different vehicle manufacturers may use different protocols. Many OBD II systems in domestic cars employ J1850 pulse width modulation at 41.6 kbaud. Message length may be restricted to 12 bytes including cycle redundancy check (CRC). The OBD II systems of other domestic vehicle manufacturers may use J1850 variable pulse width 10.4/41.6 kbaud standards, which also include message lengths restricted to 12 bytes including CRC. Some European, Asian, and domestic vehicle manufacturers may use an OBD II system based on International Organization for Standardization (ISO) protocols, which operate at 10.4 kbaud and have operability similar to or identical to Recommended Standard 232 (RS-232) systems. Other OBD II systems operate using ISO 14230 Keyword Protocol 2000 (KWP 2000) with data rates of 1.2 to 10.4 kbaud and employ messages that contain up to 255 bytes in the data field. Alternatively, OBD II systems may employ ISO 15764 protocols operating at 250 kb per second or 500 kb per second, for example, and use a control area network (CAN) that allows microcontrollers and other devices to communicate with each other within a vehicle without a host computer. Disclosed systems may include functionality to detect and communicate with a vehicle's OBD II system regardless of which communication protocol is used by a vehicle.

[0012] OBD II systems provide numerous data from a vehicle's electronic control unit (ECU). The Society of Automotive Engineers (SAE) J1979 standard outlines some methods for requesting various diagnostic data and provides a list of standard parameters that may be available from a vehicle's ECU. Available parameters can be retrieved according to parameter identification numbers (PIDs) that provide access to real-time performance data in addition to

flagged DTCs. For example, according to the J1979 standard, vehicle speed can be determined using the hexadecimal PID address 0D, engine revolutions per minute (RPMs) can be determined using the hexadecimal PID address 0C, and throttle position can be determined using the hexadecimal PID address 11. An OBD II system can also be programmed to provide information regarding what gear a vehicle is in, or the OBD II system can be programmed to determine the status of a sensor that detects the gear currently used by a vehicle's transmission. For example, disclosed systems can access OBD codes to determine the position of a gear shift position circuit or a gear shift forward actuator circuit to help determine whether a vehicle is in a condition to allow a driver access to certain functionality of a potentially restricted communication device. Disclosed systems can interface with an OBD II system to determine when a vehicle is in a condition to allow certain functionality of a communication device such as a mobile telephone, global positioning system (GPS), or other device that may require a driver's undivided attention.

[0013] Disclosed systems may employ various processors to communicate with a vehicle's OBD II system and control or restrict features of a communication device. In some embodiments, an MSP430 microcontroller is used to execute machine-readable instructions for carrying out disclosed methods and systems. The MSP430, in some embodiments, includes a 16-bit central processing unit (CPU) with a speed of 25 MHz or faster.

[0014] FIG. 1 illustrates a system for managing operation of a communication device based on vehicle status information obtained from an OBD system. As shown, vehicle status sensor 101 communicates with OED-II system 103 to provide information regarding the vehicle status. Vehicle status sensor 101 may include one or more RPM sensors, reverse gear selection sensors, forward gear selection sensors, and any other sensors related to determining when a vehicle is in a safe condition for using a communication device such as a mobile telephone. Interface 105, as shown, is an OBD II system interface with 16 female pins (not depicted). In operation, OBD II interface 107, which includes 16 male pins, is directly coupled to interface 105. OBD II interface 107 is communicatively coupled to or integrated with OBD II interface unit 109, which also includes wireless interface 111. As shown, communication device interface unit 117 communicates through wireless link 113 with OBD II interface unit 109. Wireless link 113, in some embodiments, is a Bluetooth or similar interface. Communication device interface unit 117 also includes communication device interface 119 for affecting the operability of

communication device 121 based on the vehicle status as determined by vehicle status sensors 101. Communication device 121, for example, is a mobile telephone (e.g., cellular telephone, smart phone, etc.).

[0015] FIG. 2 illustrates selected elements of system 200 for managing the operability of communication device 221 based on a vehicle status. As shown, communication device 221 is coupled to communication device interface unit 217 through interface 219. Communication device 217 includes a processor 249 and memory 251. Processor 249 may be, for example, a Texas Instruments (TM) MSP430 microcontroller. Communication interface device unit 217 includes interface 219, which is coupled to communication device 221. Interface 219 may plug into a data/power port for communication device 221 or may be directly or indirectly linked to an antenna or battery for communication device 221. For example, as shown in FIG. 2, communication interface device unit 217 is coupled to hardware switch 257, which connects antenna 255 to communication device 221. Similarly, communication device interface unit 217 controls the operation of switch 259, which is positioned between battery 253 and communication device 221. OBD II interface device unit 209 receives vehicle status information from an OBD II system (e.g., OBD II system 103 in FIG. 1) and provides status information for a vehicle over interface 211, through communication link 213, and through interface 215. As shown, OBD II interface device unit 209 includes processor 245 and memory 247. Memory 247 can be used to store vehicle information, communication device information (e.g., hardware identifiers), and computer executable instructions executed by processor 245 for determining whether acceptable vehicle conditions exist for communication device 221 to operate. Similarly, memory 251 can include hardware identifiers for communication device 221, user preferences, and computer executable instructions accessible to processor 249 for determining whether acceptable conditions exist for communication device 221. If acceptable conditions exist for communication device 221 to operate based on vehicle status, then communication device interface unit 217 closes switch 257 to allow communication device 221 access to an antenna signal from antenna 255. Similarly, if the status information indicates that acceptable conditions exist for communication device 221 to operate, communication device interface unit 217 closes switch 259 to permit communication device 221 to receive power from battery 253.

[0016] In addition to communication device interface unit 217 potentially controlling access to battery 253 and antenna 255, other operability of communication device 221 may be affected.

For example, communication device interface unit 217, through interface 219 and interface 263, may signal processor 261 to affect availability of one or more features of communication device 221. In some cases, a detected vehicle status can prompt communication device interface unit 217 to permit certain features (e.g., emergency calling or hands-free operation) while disabling other features (e.g., text messaging). Accordingly, communication device interface unit 217 may signal communication device 221 (i.e., processor 261) to affect touch screen input module 243, wireless communication module 239, emergency call operation module 237, antenna operation module 233, navigation system operation module 231, display operation module 229, voice recognition input module 227, and keyboard input module 225. Similarly, in addition to operating switch 257, communication interface unit 217 can prompt a processor 261 to affect the functionality of antenna operation module 235 and, similarly, the functionality of battery module 241. Accordingly, disclosed systems can affect the wireless capabilities of communication device 221 or affect whether communication device 221 receives power.

[0017] FIG. 3 illustrates an embodiment of OBD II interface device unit 309, which may be similar to or identical to OBD II interface unit 109 (FIG. 1) and OBD II interface device unit 209 (FIG. 2). As shown, OBD II interface device unit 309 includes MSP430 processor 345, which has access to memory 347. As shown, memory 347 includes reverse detection module 307, park detection module 309, drive detection module 311, communication device ID module 313, RPM detection module 315, wireless interface module 317, and OBD II communication module 319. OBD II communication module 319 provides OBD II interface device unit 309 the ability to communicate with an OBD II system (e.g., OBD II system 103 in FIG. 1) to permit OBD II interface device unit 309 to determine vehicle status. Wireless interface module 317 permits wireless transfer of information with a communication device interface unit such as communication device interface unit 217 in FIG. 2. OBD II interface device unit 390 can be plugged into a serial input, for example, of an OBD II system.

[0018] As shown in FIG. 3, reverse detection module 307 and a drive detection module 311 determine through OBD II interface 303 whether a vehicle is in a forward or reverse gear. An administrator can set up disclosed systems to prevent certain communication device functionality if a vehicle is in a forward or reverse gear as detected by reverse detection module 307 and drive detection module 311. If park detection module 309 detects that a vehicle is in park, full functionality for a communication device can be enabled. If RPM detection module 315

determines that an engine is operating at a speed consistent with driving, disclosed systems can prevent operation of a communication device by, for example, preventing battery power from reaching the communication device. Wireless interface module 317 provides operability for OBD II interface device unit 309 to communicate over wireless interface 333 with, for example, communication device interface unit 217 in FIG. 2. OBD II communication module 319 allows OBD II interface device unit 390 to communicate over OBD II interface 303 with, for example, OBD II system 103 and FIG. 1. Although embodiments disclosed herein may be described as having operability consistent with OBD II systems, other such systems for determining vehicle status may be used. For example, disclosed systems may utilize communication protocols and hardware components other than OBD II that provide vehicle status.

[0019] FIG. 4 illustrates selected elements of a method for controlling operability of a communication device based on vehicle status. As shown, method 400 includes determining (block 401) vehicle status. For example, a determination may be made by accessing OBD II information regarding whether a vehicle is in park, in a reverse gear, or in a forward gear. Optionally, a request is received (block 403) to operate a communication device. For example, a user may press an ON button or attempt to send a text message from a mobile phone. In the disclosed method, a determination is made (block 405) whether the requested operation is permitted. If the operation is permitted, certain functionality of the communication device is allowed (block 411). For example, if a vehicle status is determined to be “transmission in park,” disclosed systems can close hardware switches to provide the communication device access to its battery and/or antenna. If operation of the communication device is not permitted (block 405), then the communication device is disabled (block 407). Optionally, an operator, administrator, or user may be notified (block 409) regarding the disabled status of the communication device.

[0020] To the maximum extent allowed by law, the scope of the present disclosure is to be determined by the broadest permissible interpretation of the following claims and their equivalents, and shall not be restricted or limited to the specific embodiments described in the foregoing detailed description.

WHAT IS CLAIMED IS:

1. A communication device management system comprising:

   a vehicle interface unit for receiving vehicle status information; and

   a communication device interface unit for at least partially disabling the communication device in response to the received vehicle status information.

2. The communication device management system of claim 1, wherein said disabling includes preventing battery power from reaching the communication device.

3. The communication device management system of claim 1, wherein said disabling includes blocking an antenna signal.

4. The communication device management system of claim 1, further comprising:

   a switch, wherein said at least partially disabling includes opening the switch.

5. The communication device management system of claim 1, further comprising:

   a wireless interface coupled to the vehicle interface for communicating wirelessly with the communication device interface unit.

6. The communication device management system of claim 1, wherein the vehicle interface device unit includes an OBD II interface.

7. The communication device management system of claim 1, wherein the communication device is a mobile telephone.

8. A method of managing communication device functionality the method comprising:

   determining from an onboard diagnostic system a vehicle status;

   determining whether a communication device function is permitted based at least in part on said determining; and

if the communication device function is not permitted, disabling the device function by affecting whether the communication device receives an input.

9. The method of claim 8, wherein said affecting includes preventing battery power from reaching the communication device.

10. The method of claim 8, wherein said affecting includes preventing an antenna signal from reaching the communication device.

11. The method of claim 8, further comprising:

notifying a user of said disabling.

12. A communication device management system comprising:

a communication device interface unit including a communication device interface for affecting operability of a communication device and an OBD interface unit for communication with an OBD interface unit, wherein the OBD interface unit communicates with an OBD system of a vehicle to determine whether an accepted vehicle condition is present, wherein if the accepted vehicle condition is not present, the communication device interface unit is enabled for disabling the communication device through the communication device interface.

13. The communication device management system of claim 12, wherein the communication device interface of the communication device interface unit includes a battery switch.

14. The communication device management system of claim 12, wherein the communication device interface of the communication device interface unit includes an antenna switch.

15. The communication device management system of claim 12, wherein said communication between the OBD interface unit and the communication device interface unit occurs wirelessly.

16. The communication device management system of claim 12, wherein said accepted vehicle condition includes “transmission in park” status.

17. The communication device management system of claim 12, wherein said accepted vehicle condition includes a “transmission in neutral” status.

18. The communication device management system of claim 12, wherein said accepted vehicle condition precludes a “transmission in reverse” status.

19. The communication device management system of claim 12, wherein said accepted vehicle condition precludes a “transmission in forward gear” status or a “transmission in reverse gear” status.

20. The communication device management system of claim 12, wherein said accepted vehicle condition precludes an “engine on” status or an “engine rpm value > 0” status.

21. The communication device management system of claim 12, wherein said affecting includes permitting emergency call operation of the communication device.

22. The communication device management system of claim 12, wherein said affecting includes preventing text messaging.

23. The communication device management system of claim 12, wherein said affecting includes a tamper-proof connection to the vehicle that will restrict simple defeat or removal of said device while maintaining evidence of when tampering has occurred. (We plan to have simple versions with signed/dated tags like ski lift passes and/or simple lock and key to secure the devices. If the device is tampered with or removed, it will at least be obvious to the parent or employer. There are no current plans to tie the tampering to battery disabling at this time.)

Appendix B: Sample Survey Form

Parental Survey for Teen Driver: Week 0

Parent Name:

Parent Address:

Parent Phone #

Parent email:

Age of Teen: _____ Gender of Teen: _____ Date: _____

Teen city of residence:

Does your teen currently have a dedicated vehicle to drive? Y / N

At what age and calendar date did your teen receive his/her driver's license?
_____

Make and Model of teen's vehicle? _____

Make and Model of teen's cell phone? _____Does it include a data plan? Y / N

Has your teen ever been involved in an automobile crash while driving?

(Please indicate the number of each)

___Speeding (exceeding a posted limit)
___Speeding (driving an unsafe speed)
___Driving too slowly for road conditions, particularly in a left-hand lane
___Running a stop sign or red traffic light
___Failure to yield to another vehicle with the right-of-way
___Failure to signal for turns or lane changes
___Failing to drive within a single lane
___Crossing over a center divider, median or gore
___Driving on the shoulder where it is considered illegal under certain conditions
___Failure to use a seat belt
___Failure to stop for a pedestrian in a crosswalk
___Failure to stop for a school bus when children are boarding or exiting
___Driving in a car pool lane illegally
___Operating a telecommunications device whilst driving (in school zone or area where forbidden)
___Driving a vehicle outside the conditions of one's license
___Driving under the influence
___Reckless driving
___Street racing
___Other (Please Explain:_____
_____

Parental Survey for Teen Driver: 6 months/12 months

Parent Name:

Parent Address:

Parent Phone #

Parent email:

Age of Teen: _____ Gender of Teen: _____ Date: _____

Has your teen ever been involved in an automobile crash while driving? Y / N

If the cell phone interruption device was installed in your teen's vehicle, is it still working? Y / N

At any time did you remove or disable the device? Y / N

At any time did your teen remove or disable the device? Y / N

Since starting the study in the Fall of 2010, has your teen received a citation for any of the following:

(Please indicate the number of each)

___Speeding (exceeding a posted limit)
___Speeding (driving an unsafe speed)
___Driving too slowly for road conditions, particularly in a left-hand lane
___Running a stop sign or red traffic light
___Failure to yield to another vehicle with the right-of-way
___Failure to signal for turns or lane changes
___Failing to drive within a single lane
___Crossing over a center divider, median or gore
___Driving on the shoulder where it is considered illegal under certain conditions
___Failure to use a seat belt
___Failure to stop for a pedestrian in a crosswalk
___Failure to stop for a school bus when children are boarding or exiting
___Driving in a car pool lane illegally
___Operating a telecommunications device whilst driving (in school zone or area where forbidden)
___Driving a vehicle outside the conditions of one's license
___Driving under the influence
___Reckless driving
___Street racing
___Other (Please Explain:_____
_____

Appendix C: Additional Figures

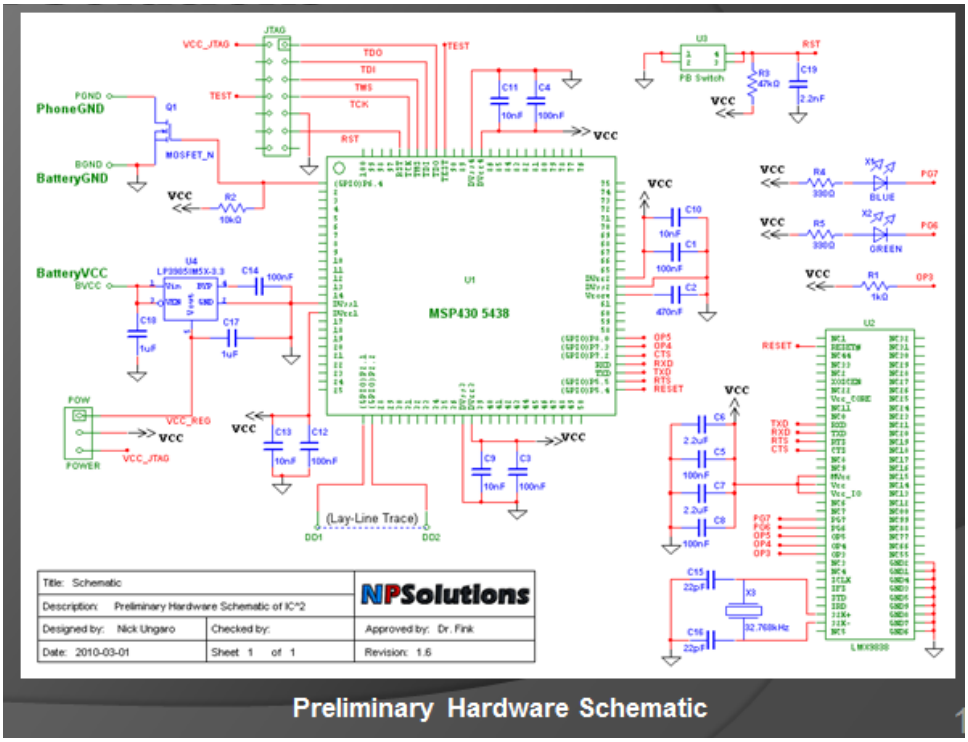

Figure C-1. Preliminary Hardware Schematic

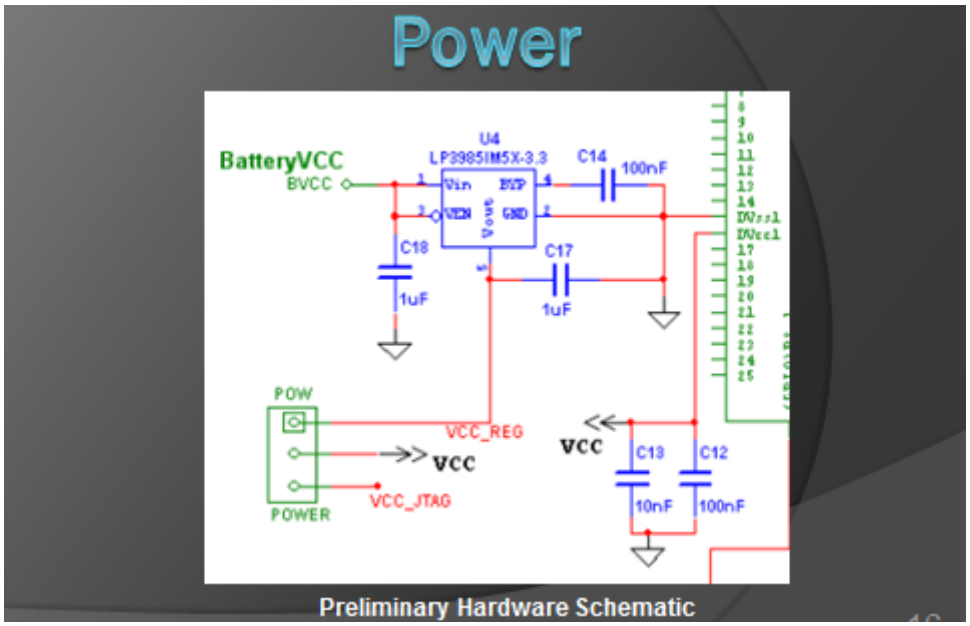

Figure C-2. Preliminary Hardware Schematic: Power

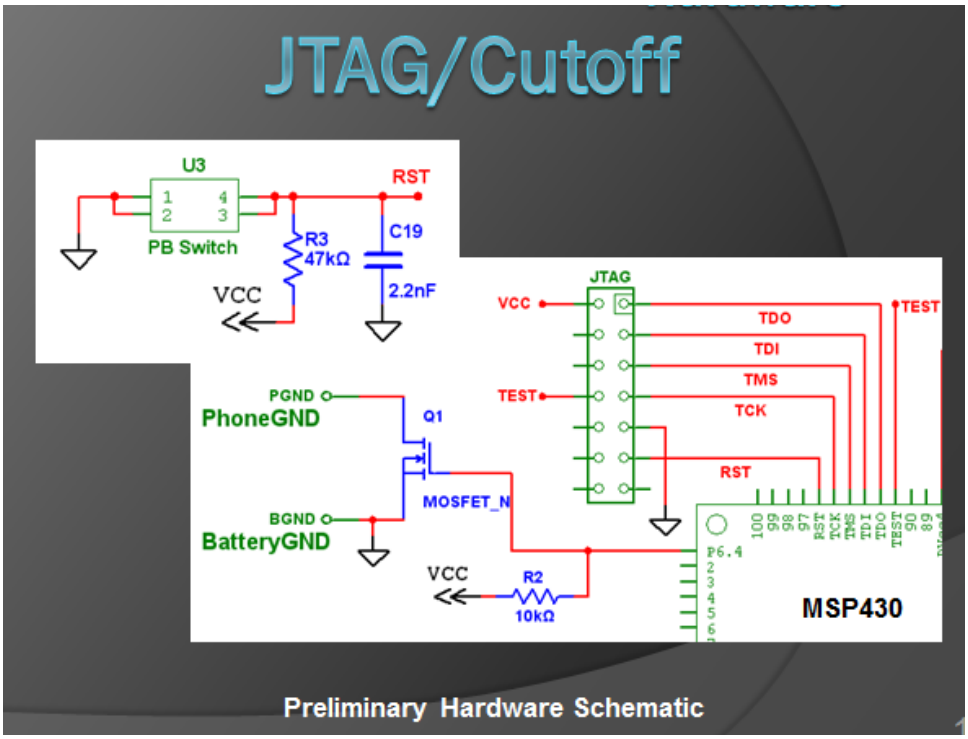

Figure C-3. Preliminary Hardware Schematic: JTAG/Cutoff

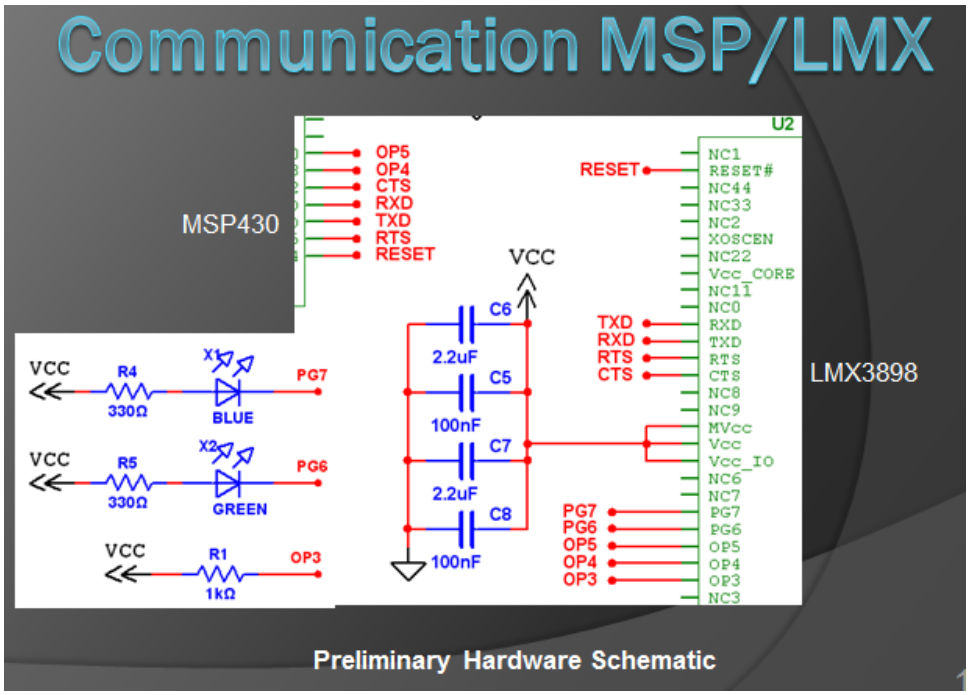

Figure C-4. Preliminary Hardware Schematic: Communication MSP/LMX

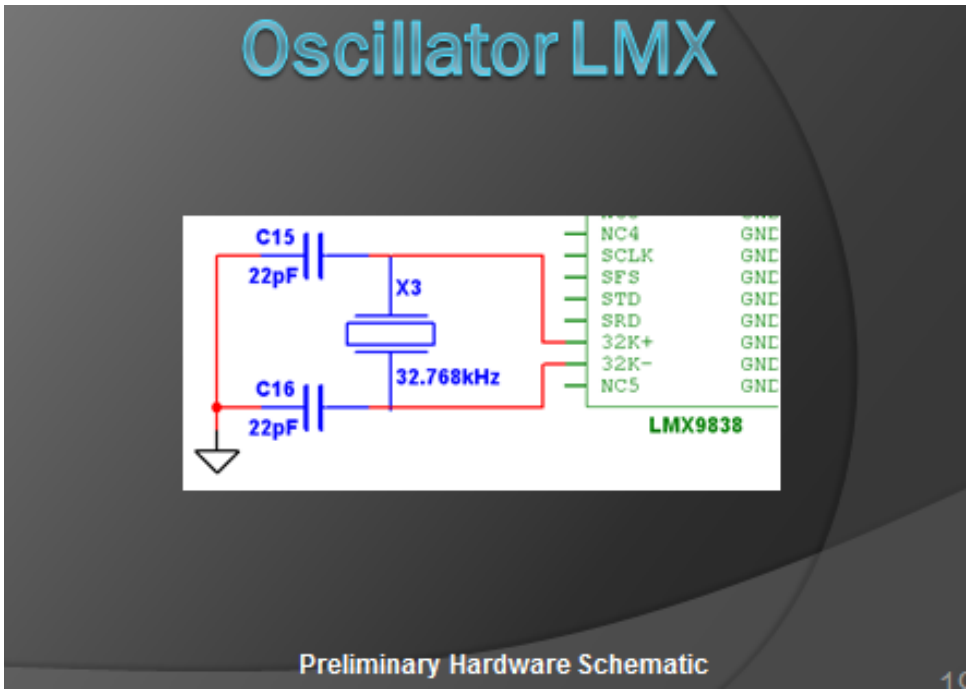

Figure C-5. Preliminary Hardware Schematic: Oscillator LMX

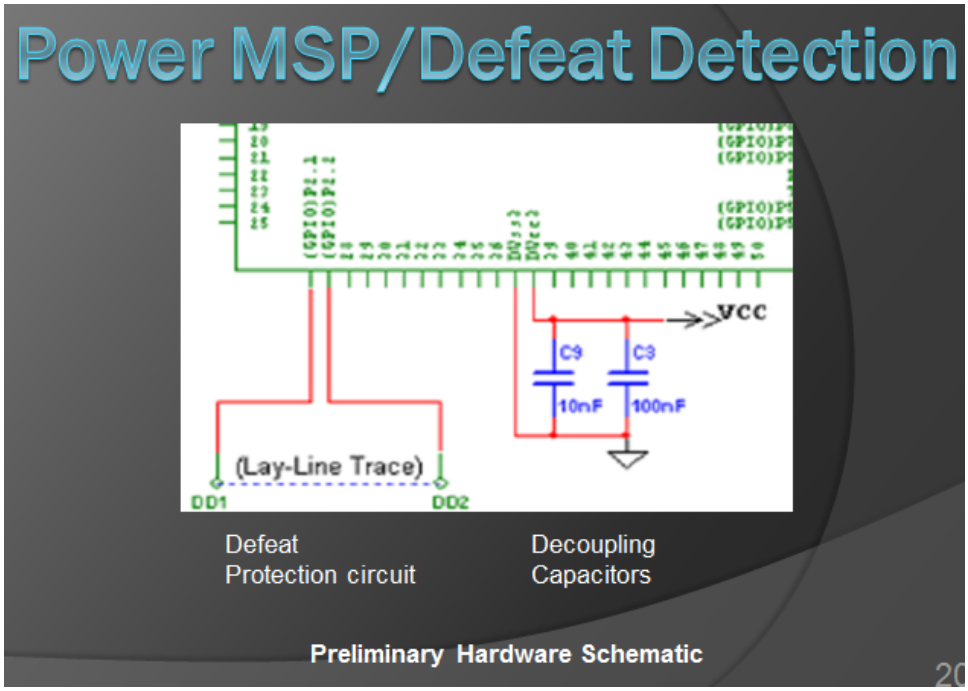

Figure C-6. Preliminary Hardware Schematic: Power MSP/Defeat Detection

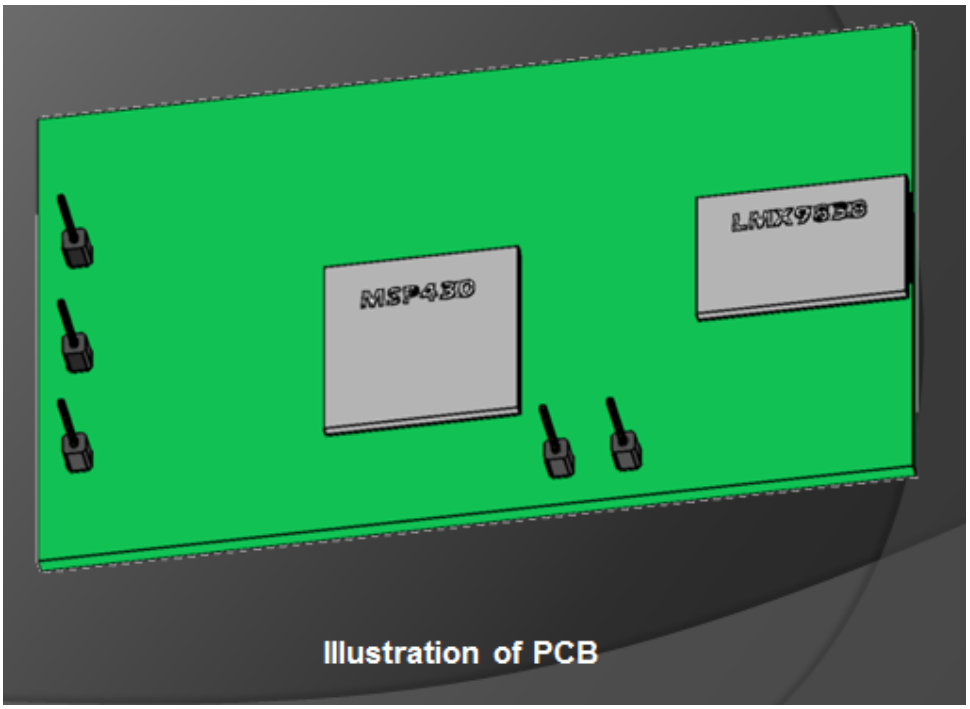

Figure C-7. PCB

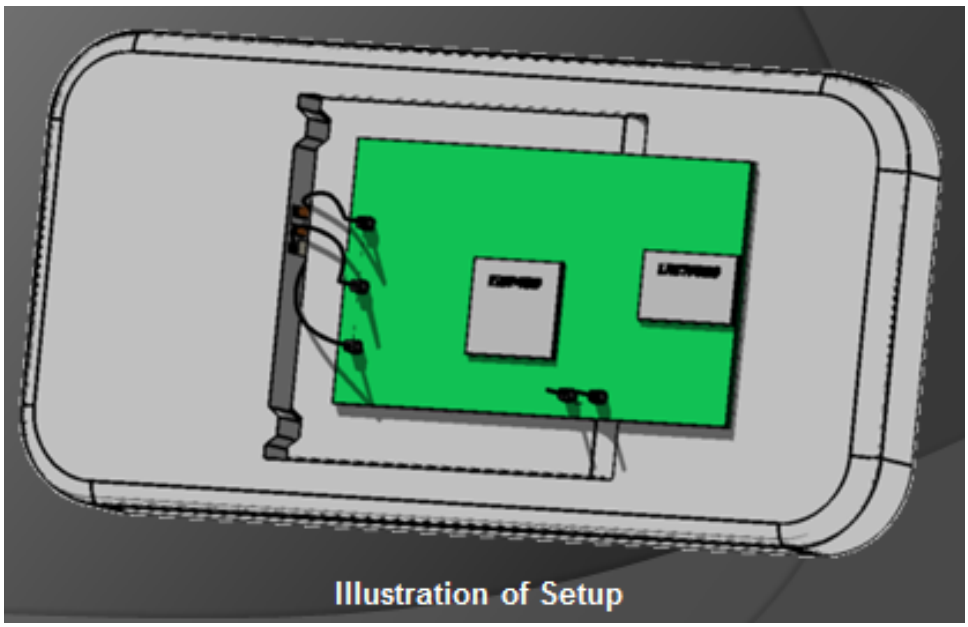

Figure C-8. Setup

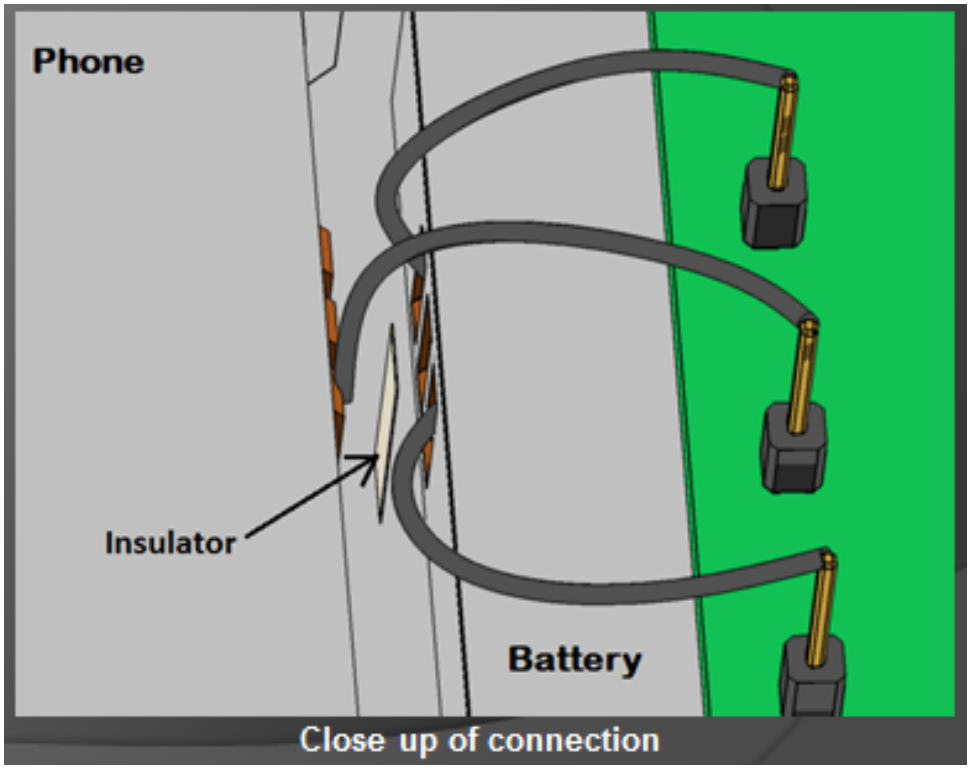

Figure C-9. Close Up of Connection

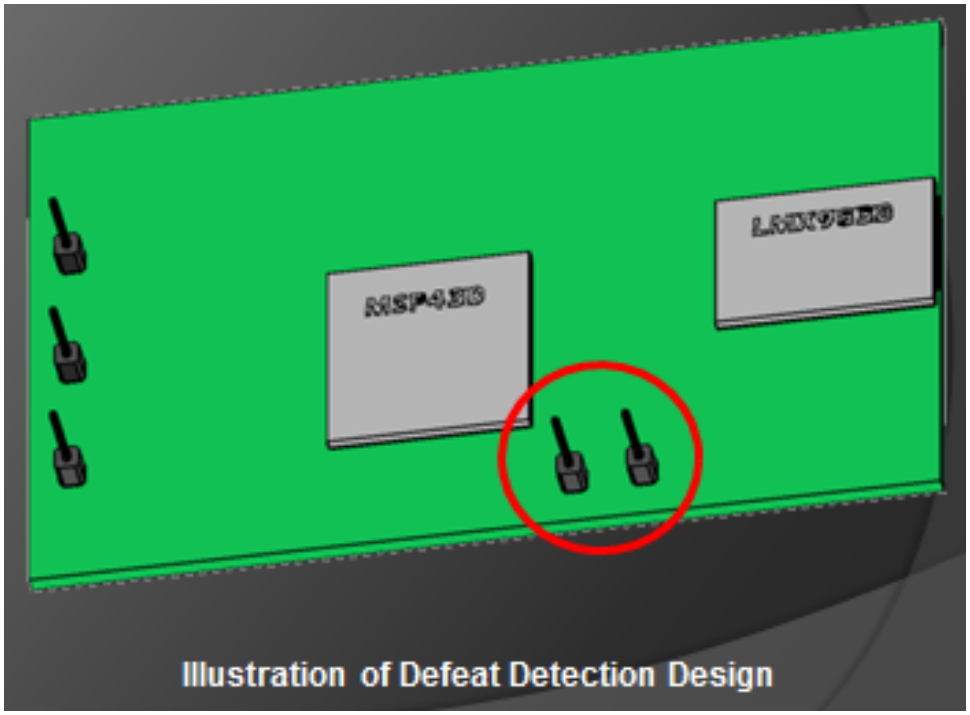

Figure C-10. Defeat Detection Design

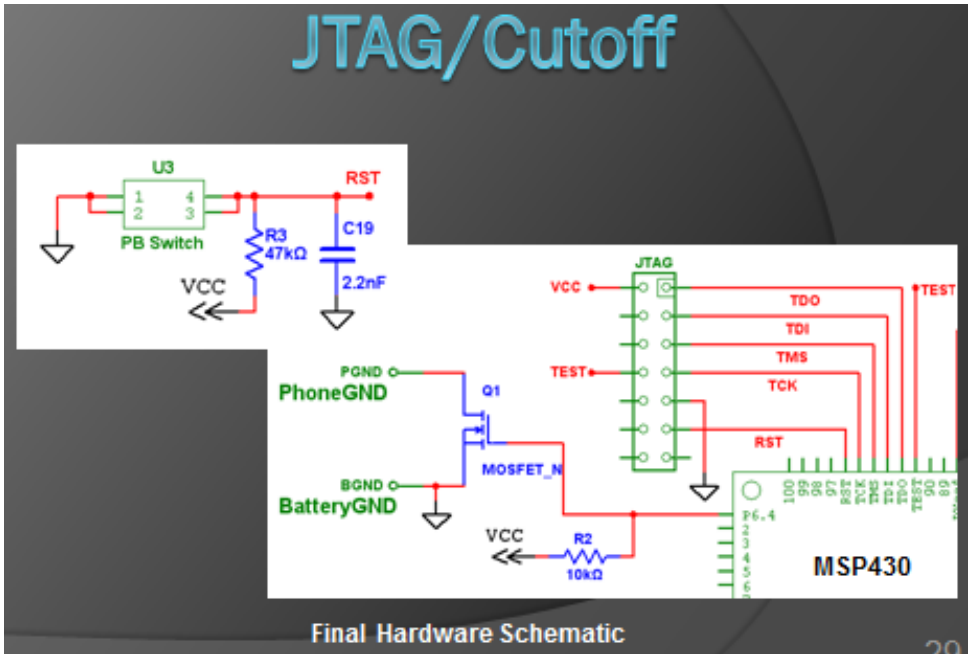

Figure C-11. Final Hardware Schematic: JTAG/Cutoff

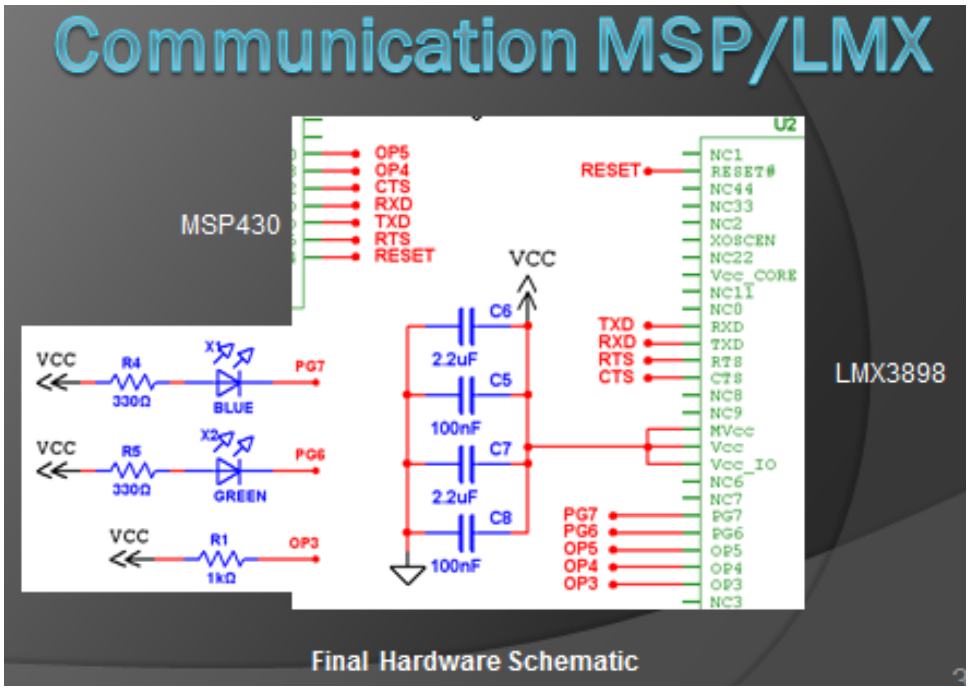

Figure C-12. Final Hardware Schematic: Communication MSP/LMX

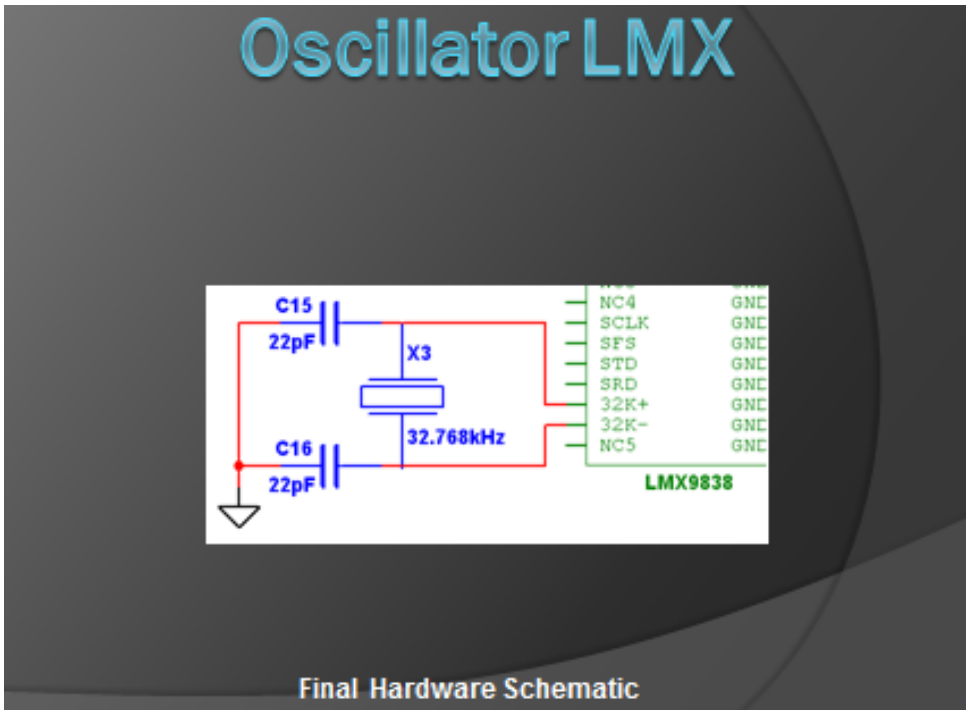

Figure C-13. Final Hardware Schematic: Oscillator LMX

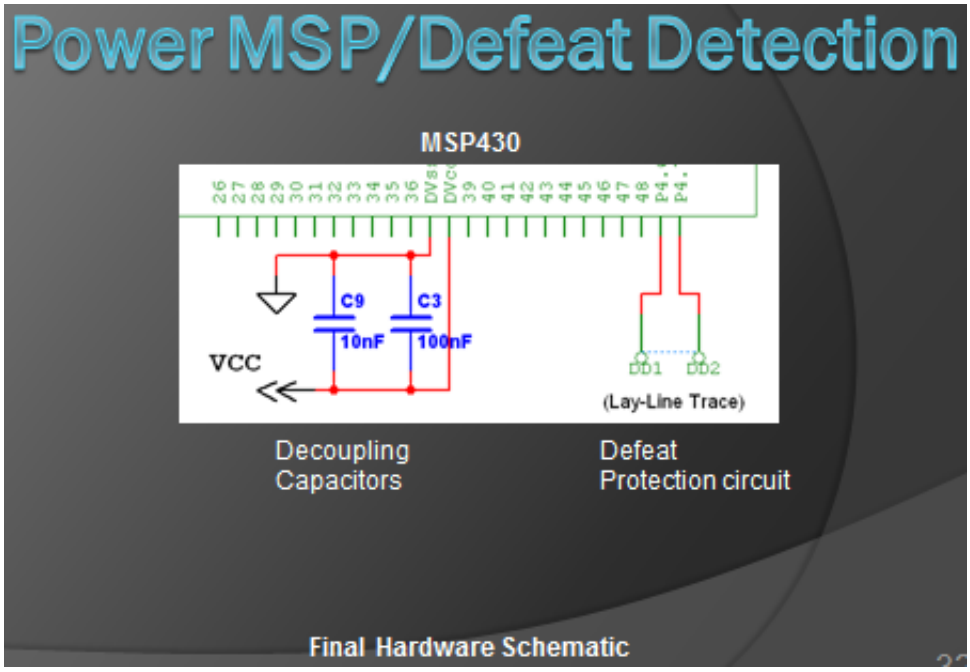

Figure C-14. Final Hardware Schematic: Power MSP/Defeat Detection

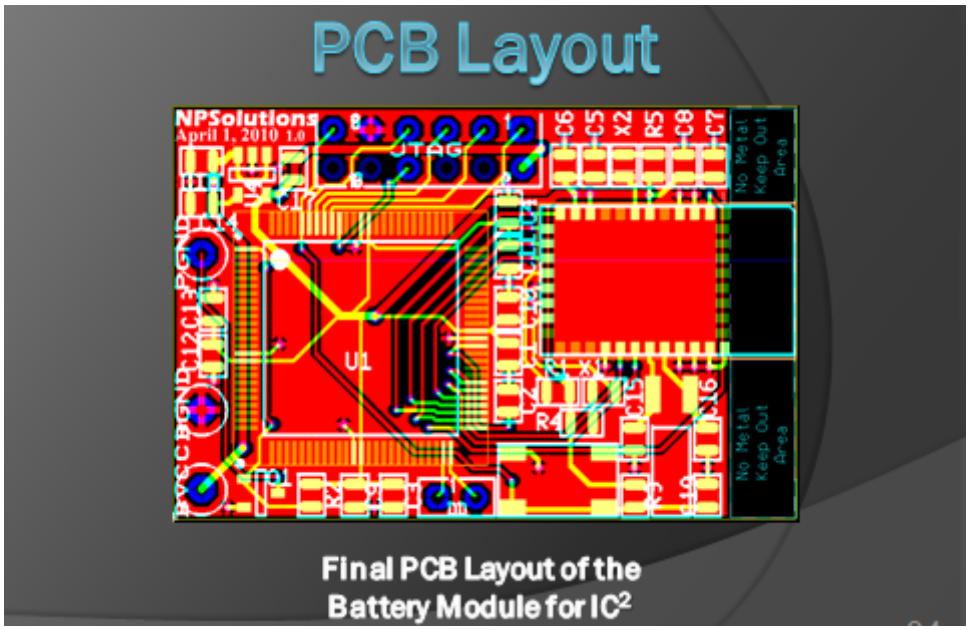

Figure C-15. PCB Layout

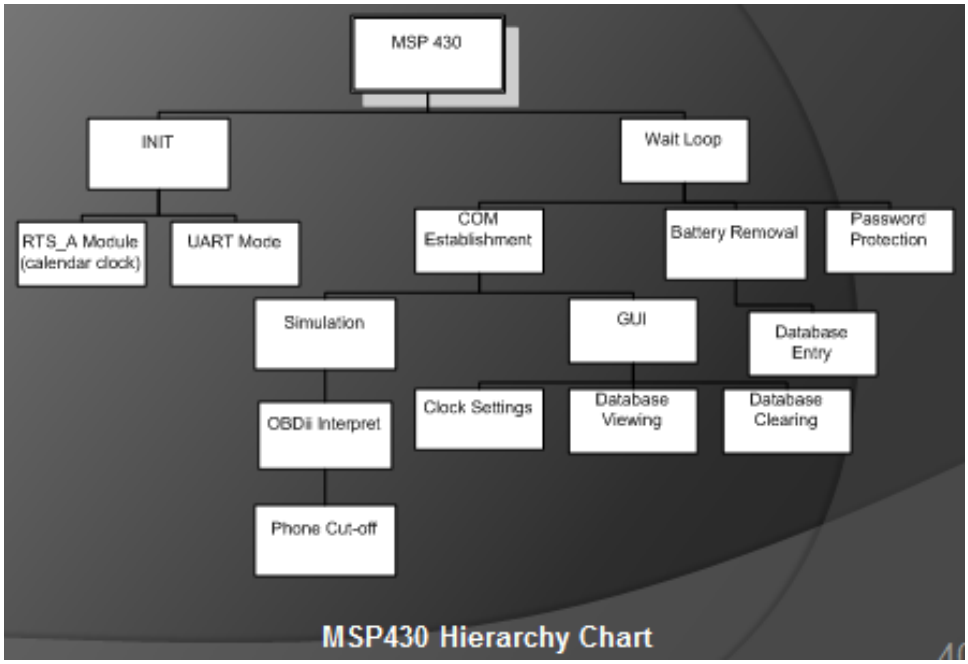

Figure C-16. MSP430 Hierarchy Chart

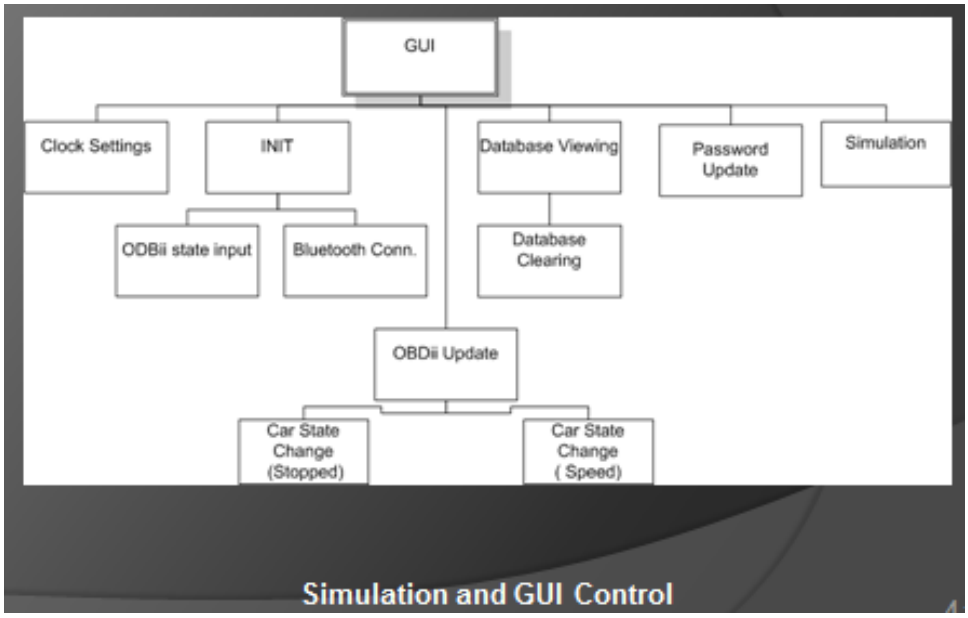

Figure C-17. Simulation and GUI Control Hierarchy

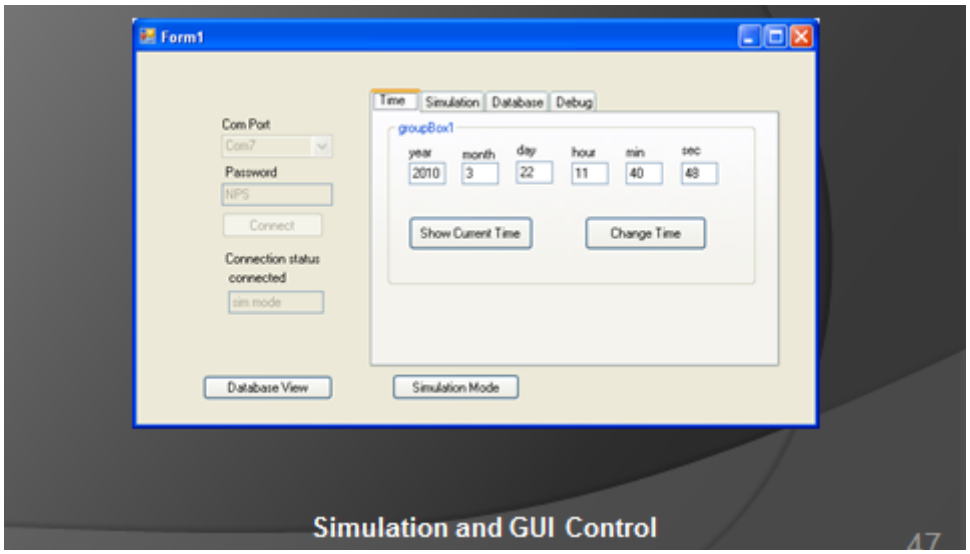

Figure C-18. Simulation and GUI Control Screenshot: Time

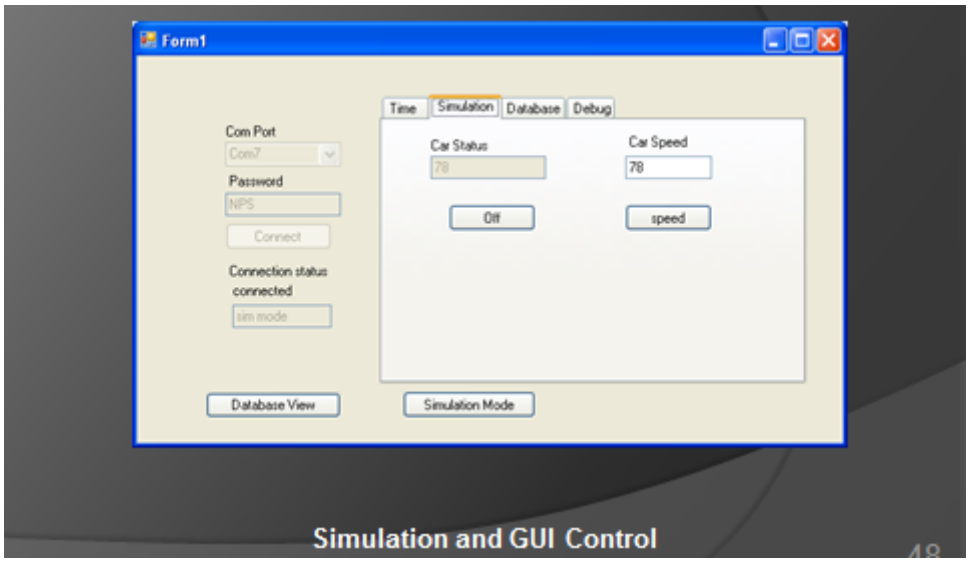

Figure C-19. Simulation and GUI Control Screenshot: Simulation

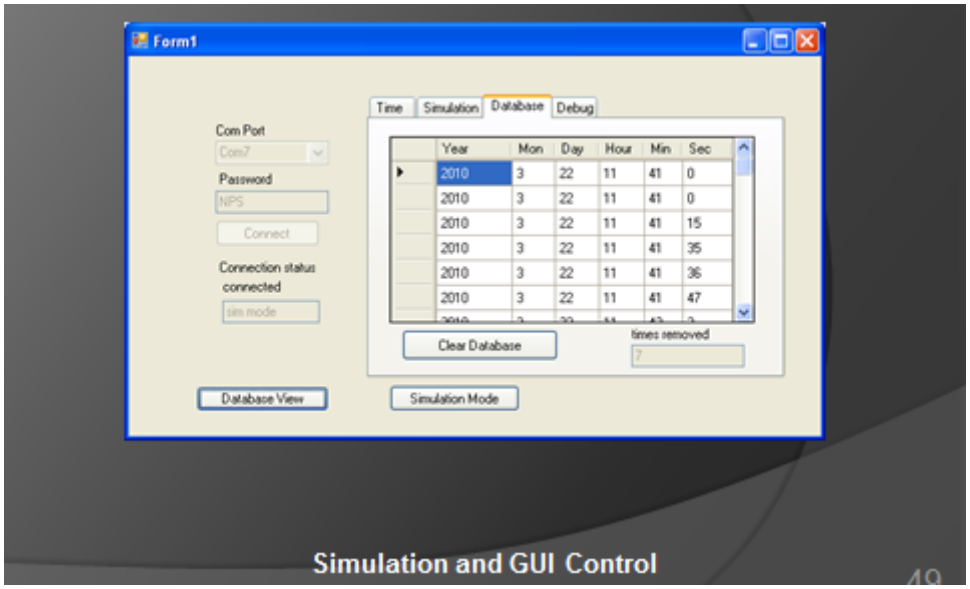

Figure C-20. Simulation and GUI Control Screenshot: Database

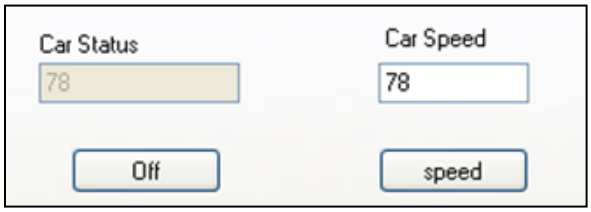

Figure C-21. Simulation and GUI Control Screenshot: Simulation

Appendix D: Literature Review (excerpted from Henry 2011)

Author(s) and journal title	Year	Sample characteristics	Is texting while driving addressed?	Parents' perception of technological control?
Consiglio, Driscoll, Witte, Berg *Accident Analysis and Prevention*	2003	22 young adults between the ages of 18 and 27 (mean = 21) Location: urban (Miami University students)	No	No
Hancock, Lesch, Simmons *Accident Analysis and Prevention*	2003	36 participants, of which 19 were ages 25-36 while 17 were ages 55-65 Location: NA-probably urban	No	No
Lee & Strayer *Human Factors*	2004	NA	No	No
Wogalter & Mayhorn *Human Factors*	2005	221 undergraduate students, 109 nonstudents Location: urban-research triangle region	No	No
Horrey & Wickens *Human Factors*	2006	23 studies, all ages Location: NA	No	No
Simons-Morton & Ouimet *Injury Prevention*	2006	Teens Location: NA-mentions urban	No	Yes
Winston & Senserrick *Injury Prevention*	2006	Teens Location: NA	No	No
Hedlund *Journal of Safety Research*	2007	Teens Location: NA Literature Review	Yes	No
Lee *Journal of Safety Research*	2007	Teens Location: NA	Yes	No
McGehee, Raby, Carney, Lee, Reyes *Journal of Safety Research*	2007	26 teen drivers Location: rural, small Midwestern high school in rural Iowa	No	No
Allen & Brown *American Journal of Preventative Medicine*	2008	Teens Location: NA	No	No
Braitman, Kirley, McCartt, Chaudhary *Journal of Safety Research*	2008	Crash reports from 893 non-fatal crashes involving 16-year-old drivers Location: NA-probably urban	No	No
Caird, Willness, Steel, Scialfa *Accident and Analysis Prevention*	2008	Approximately 2000 participants, all ages Location: NA	No	No
Graham & Gootman *American Journal of Preventative Medicine*	2008	Teens Location: NA	No	No
Horrey, Lesch, Garabet *Accident Analysis and Prevention*	2008	40 drivers, two age groups: 20 younger drivers between ages of 18-34 years, and 20 older drivers between ages of 55-82 Location: NA	Yes	No
Lee *Human Factors*	2008	All ages, teens included Location: NA	No	No

Simons-Morton, Ouimet, Catalano *American Journal of Preventative Medicine*	2008	Teens Location: NA	No	No
Foss, Goodwin McCarrt, Hellinga *Accident Analysis and Prevention*	2009	6164 teens in North Carolina, 1632 teens in South Carolina Location: NA-probably urban	Yes	No
Ishigami & Klein *Journal of Safety Research*	2009	Multiple studies reviewed Location: NA-mentioned "environmental complexity" (pp. 160, 163) Literature Review	No	No
Lee *Science*	2009	NA Location: NA	No	No
Wilson & Stimpson *American Journal of Public Health*	2010	FARS database for years 1999-2008	Yes: actual measure	No

University Transportation Center for Mobility™

Texas Transportation Institute

The Texas A&M University System

College Station, TX 77843-3135

Tel: 979.845.2538 Fax: 979.845.9761

utcm.tamu.edu