NTRCI

NATIONAL TRANSPORTATION RESEARCH CENTER, INCORPORATED
UNIVERSITY TRANPORTATION CENTER

U10: Trusted Truck® II (Phase B)

This project was funded by the NTRCI University Transportation Center under a grant from the U.S. Department of Transportation Research and Innovative Technology Administration (#DTRT06G-0043)

Sandra Selley – Volvo Technology of America, Inc
Tom Urbanik – The University of Tennessee

January 2009

Table of Contents

List of Figures

List of Tables

Executive Summary

Phase B of the Trusted Truck® II project built on the system developed in Phase A (or Year 1).

For the implementation portion of the project, systems were added to the trailer to provide additional diagnostic trailer data that can be sent to the TTMC. Tractor and trailer weight, trailer tire pressure and temperature, trailer ID, and shipment data were successfully added to the data set sent to the TTMC. Phase B also included implementation of driver logon authentication through the TTMC. A System Architecture document was written to provide a comprehensive architectural overview of the non-Volvo proprietary elements of the Trusted Truck ® II project.

For the investigation portion of the project, Volvo researched alternative technologies and hardware to enable wireless communication between the trailer and tractor, to obtain diagnostic data from the trailer lights, and to ensure cargo security. The team was able to proceed with implementation of the recommended solutions, resulting in wireless communication of trailer light and cargo door status from the trailer to the tractor. Additionally, Volvo supported the Traffic Signal Priority investigation led by the University of Tennessee through a study of message latency data sent to and from a simulated roadside traffic signal server.

All implementation was successfully bench tested outside the test truck environment. Final end-to-end testing inside the test truck of all new features is scheduled to be completed by January 31, 2009, and will be reported on in Phase C of the Trusted Truck® project.

The Trusted Truck® team recommends proceeding with Phase C and D of the project, working towards a final interstate demonstration of issuing a Trusted Truck® compliance certificate.

Chapter 1 – General Overview

Background

The Trusted Truck® program is a joint effort of Volvo, NTRCI and the University of Tennessee. The vision of the Trusted Truck® program is to develop a secure and "trusted" transport solution from pickup to delivery. The program's objective is to increase the safety, security, and efficiency of truck transportation by presenting wireless credentials to roadside inspectors that confirm the tractor, trailer and cargo meet all appropriate requirements for safe transportation of the cargo. By presenting these credentials without the need for the truck to stop, the number of inspections increase, the efficiency of the system improves, and inspectors can have more time to target more likely safety and security violations. The Trusted Truck® II Phase B project is the four year continuation of this program.

Functionality of Phase A (Year 1), of the Trusted Truck® II project was successfully demonstrated on April 25th, 2008, at Volvo US Headquarters in Greensboro, NC. In Phase A, a new Volvo Trusted Truck® was equipped with several off-the-shelf systems to detect brake lining & stroke, tire pressure & temperature as well as the pressure status of an in-cab fire extinguisher. In addition, the tractor could detect the status of the lighting, stability control and seatbelt systems. The trailer was also equipped with a brake system that reported the status of the trailer's brake stroke. All the data generated from these systems was transferred to the roadside using a standard commercial cellular data link (GPRS). The Phase A effort also introduced the Trusted Truck® Management Center (TTMC), a data repository to be operated by a 3rd party that consolidates all data as it is received from the truck and performs the wireless inspections. The TTMC is also capable of adding look-up data, demonstrated on April 25th by the addition of the make and model of the truck together with the name of the carrier and driver. The demonstration showed a "trusted" vehicle bypassing a roadside inspection using the TTMC as the method of delivering the inspection results electronically to the inspection station. It also demonstrated that if the vehicle failed the wireless inspection, the truck driver was informed on an in-dash display to enter the inspection station in the same manner as all other vehicles without Trusted Truck® status.

Three successful demonstration runs of Phase A functionality were made using the Volvo Trusted Truck®:

1. The truck had no faults and passes the wireless inspection. With the automatic setting at the TTMC enabled, the driver gets an in-cab prompt to bypass the inspection. The bypass notifier indicates to inspection station personnel that a "trusted" truck has been allowed to bypass the station.
2. The truck has a brake fault and does not pass the wireless inspection. The automatic response from the TTMC notifies the driver via an in-cab prompt to enter the inspection station. The bypass notifier does not indicate anything to the inspection station that could identify the truck, which enters the station as part of the general population of trucks on the highway.
3. The truck has a lighting fault and does not pass the wireless inspection. The automatic response is not enabled at the TTMC and the TTMC operator initiates a message to the

truck, giving the driver the in-cab prompt to enter the inspection station. The bypass notifier does not indicate anything that could identify the truck, which enters the station as part of the general population of trucks on the highway.

The Trusted Truck® II Phase B project is the second part of the four year Trusted Truck® II project. The focus of Phase B was to expand the communications to the trailer and provide more real-time trailer safety and diagnostic information that can be sent to the TTMC. The project also provided support to a related truck priority at traffic signals project led by the University of Tennessee.

Project Team

The project team consists of the University of Tennessee, Volvo Truck North America, and Volvo Technology of America. This same team has previously collaborated on development of the Trusted Truck® Concept and the Trusted Truck® II Phase A program. The Phase B effort is a continuation of these activities.

As in Year 1, the project partners continued to demonstrate their commitment to the Trusted Truck® project by contributing cost share in excess of the required 20%.

Project Description

Phase B of the Trusted Truck® project began July 1, 2008, and concluded January 31, 2009. Compared to the original plan for Phase B detailed in the Trusted Truck® Roadmap[1] the scope was significantly reduced in order to fit into a shorter timeframe. Any removed functionalities (such as migration to DSRC technology) will potentially be added to Phase C or Phase D of the project. Additionally, selected features from Phase C (such as driver verification) have been pulled ahead to Phase B.

In Phase B the project built on the system developed in Phase A. The project incorporated additional safety and diagnostic systems and data sets into the On-Board Component of the overall system. This data is sent to the TTMC via a wireless link. The following data was incorporated into the On-Board Component:

- Tractor weight
- Trailer weight
- Trailer tire pressure & temperature
- Trailer ID
- Shipment data
- Additionally, authentication of driver logon through the TTMC was implemented as a new feature.
- The project also supported investigations by the University of Tennessee and Volvo on the feasibility and benefits of the following subjects:
- Truck Priority at Traffic Signals related issues
- USDOT/FMCSA Data
- Wireless Trailer Communication Trailer Lights and Cargo Security

[1] 'Trusted Truck.ppt', dated 12-Dec-2007, author Marty Foulks

Chapter 2 – System Design

Graphical Overview

The system design as described in the Trusted Truck® II, Phase A report is pictured below for reference.

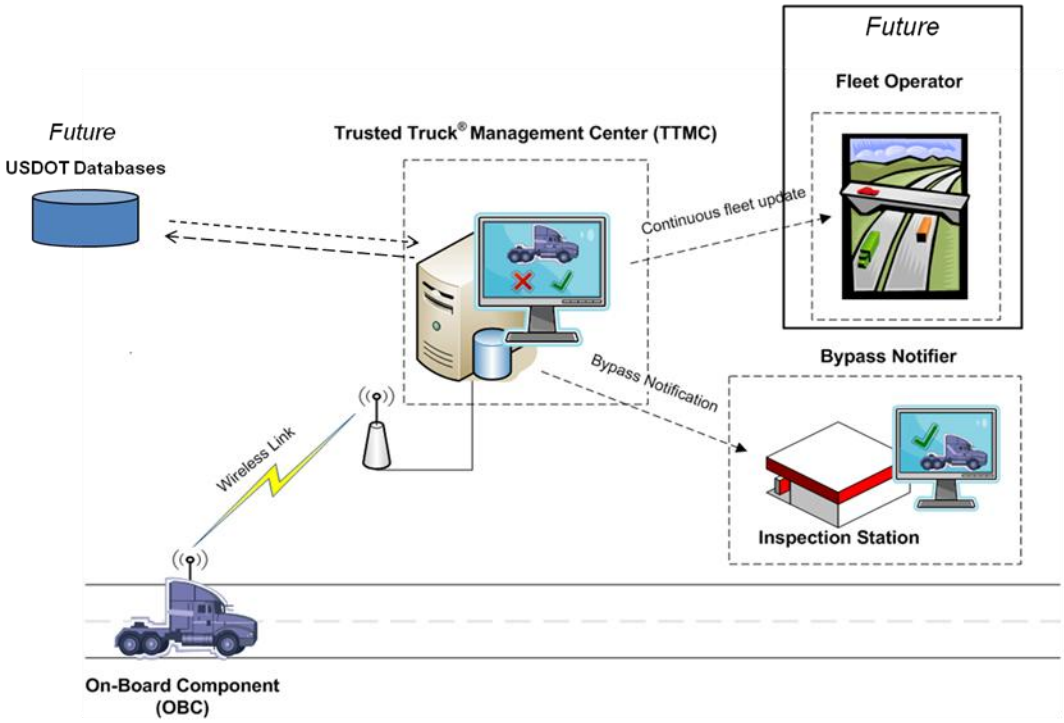

Figure 1. Diagram. Trusted Truck® System Design.

The system contains three parts, the On-Board Component (OBC), the Trusted Truck® Management Center (TTMC) and the Bypass Notifier. The On-Board Component resides in the vehicle, the TTMC resides at a (potentially) off-site location, and the Bypass Notifier resides at the inspection station. The OBC and the TTMC are communicating via a wireless communication link, while the TTMC and the Bypass Notifier use a wired link

Systems Requirements

The System Requirements Specification written in Phase A of the Trusted Truck® project has been updated to include the identification of new data elements implemented in Phase B. The updated document is located in Appendix A.

System Architecture

A System Architecture document was written to provide a comprehensive architectural overview of the non-Volvo proprietary elements of the Trusted Truck® II platform demonstration system. This document defines the overall architecture by the presentation of the Logical View, the Deployment view, and the Implementation view. The Logical view defines the various modules comprising the solution. The Deployment view highlights the applications and their placement

within the network topology. The implementation view focuses on those structures associated with moving data between the various applications. The Deployment view is show below:

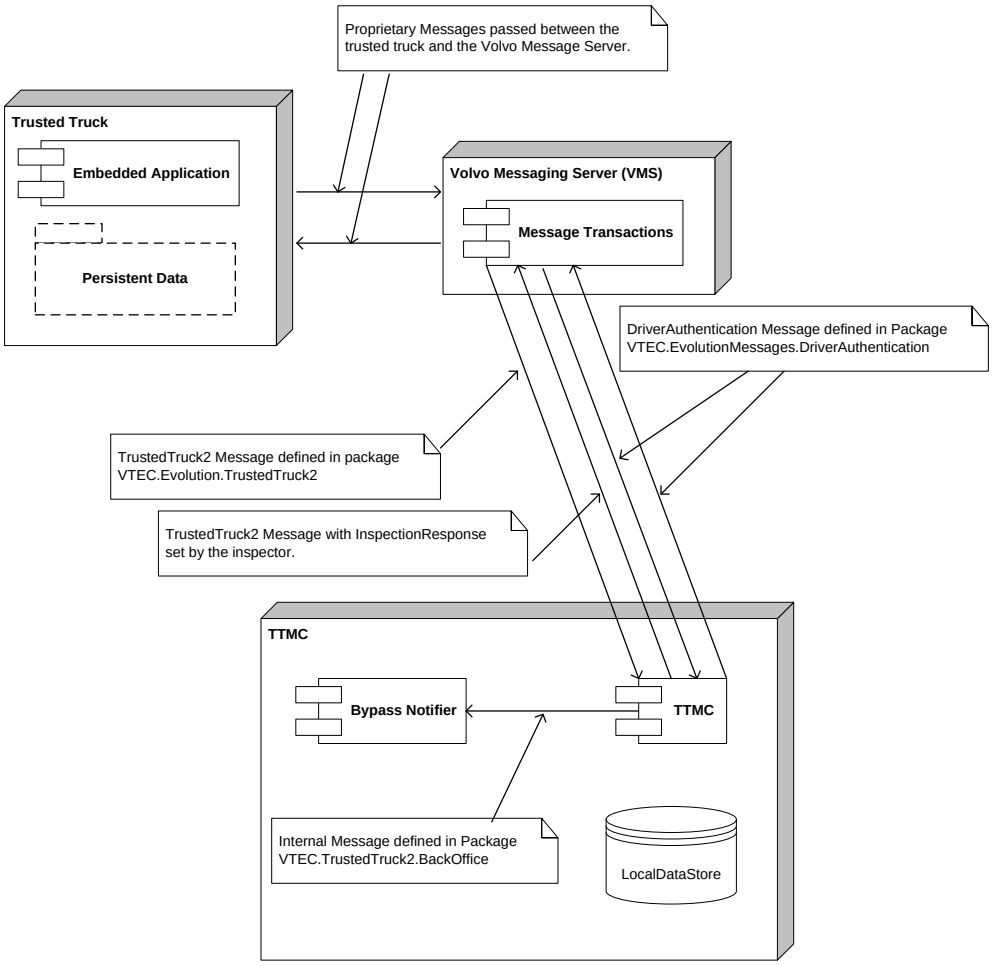

Figure 2. Diagram. Trusted Truck® System Architecture.

An appendix is also included in the System Architecture Document which equates Safety Data Message Set elements as defined by FMCSA to the various data elements included in the Trusted Truck® messaging structure, including the data type and the data source within the solution. The complete document is located in Appendix B.

Chapter 3 – Implementation

Trailer Tire Pressure and Temperature

A production SmarTire system, similar to that installed on the tractor in Phase A, was installed on the trailer of the test truck. This system is capable of measuring trailer tire pressure and temperature. This data was added to the inspection data set sent from the OBC to the TTMC. The 'Tires' tab of the 'Inspection Overview' portion of the TTMC screen was updated to include a display of the trailer tire temperature and pressure. The updated tab is shown below:

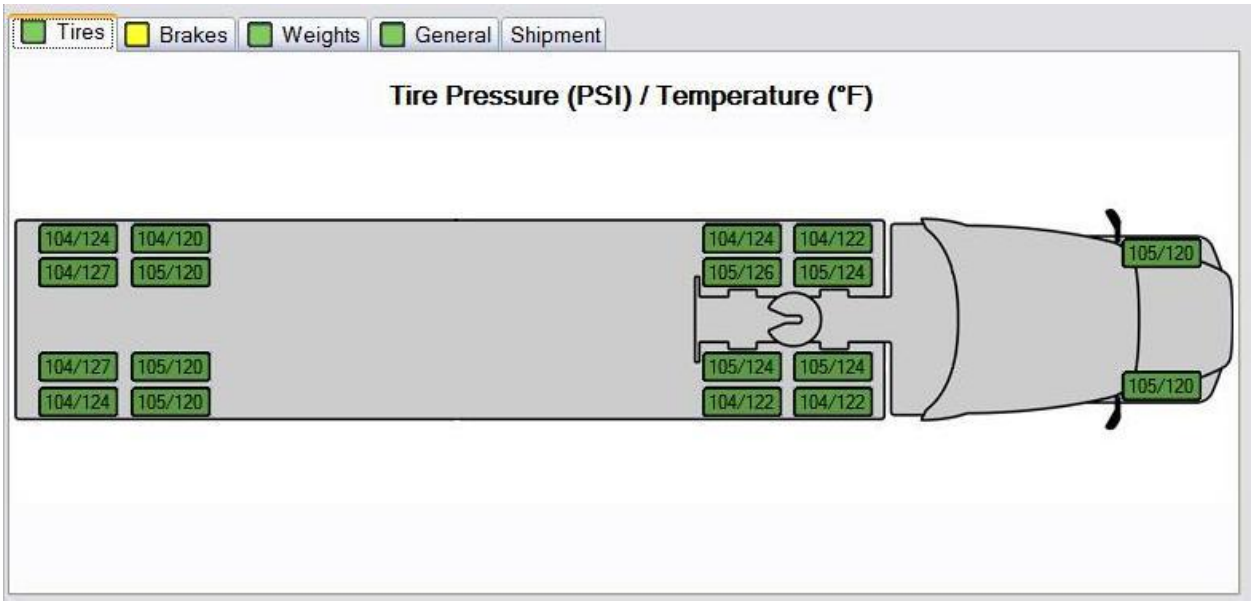

Figure 3. Screen Shot. Tire Pressure and Temperature Display.

Shipment Data

Shipment data is now included in the data store on the TTMC. This data includes origination address, destination address, shipment name/description, shipment quantity, and shipment weight. The TTMC will associate the shipment data with the Trailer VIN included in the inspection data set sent from the OBC. A new 'Shipment' tab was added to the 'Inspection Overview' portion of the TTMC screen to display this information. This new tab is shown below on the TTMC screen:

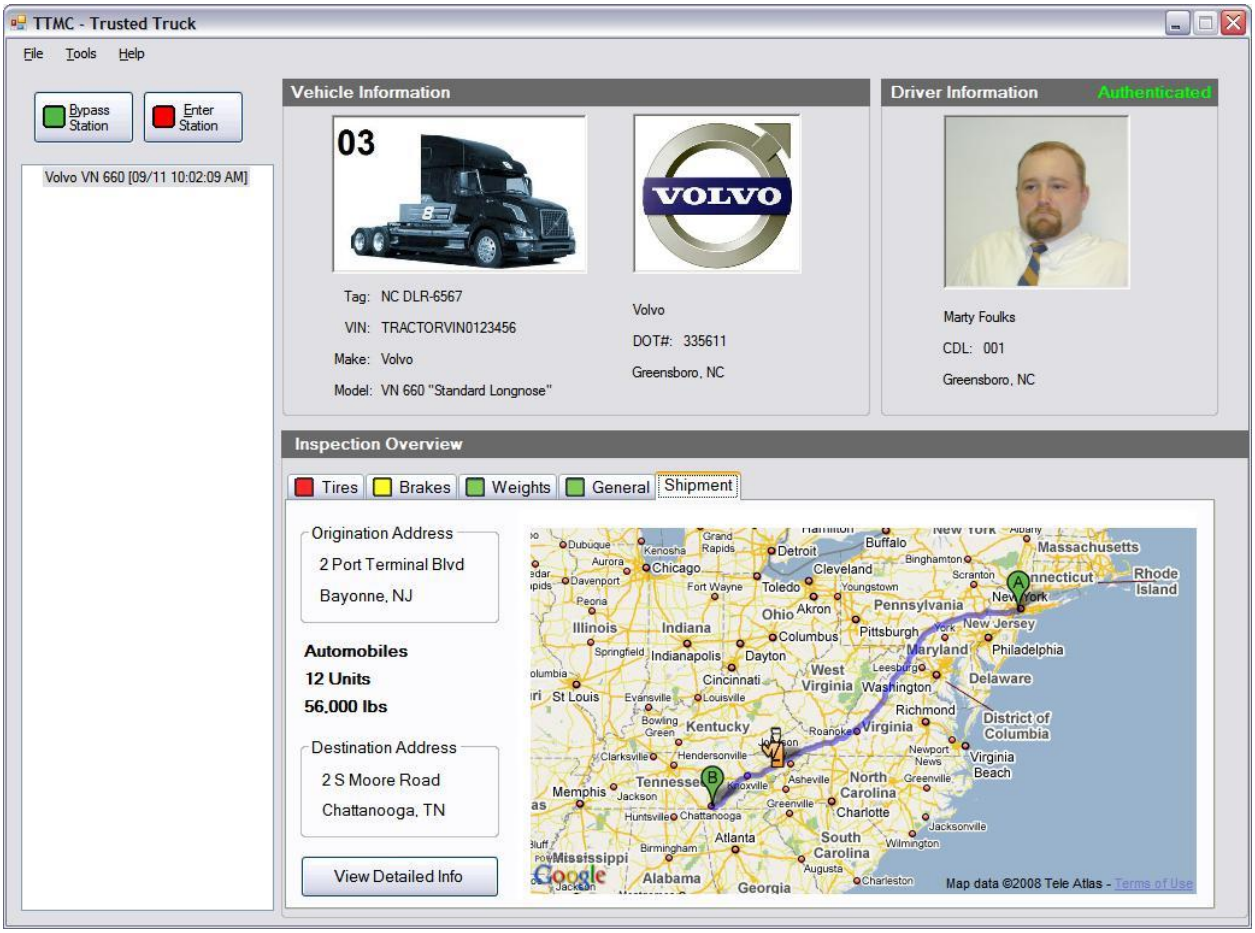

Figure 4. Screen Shot. Trusted Truck® TTMC Example Screen.

The new tab shows basic shipment data along with a map of the planned route from origin to destination. The capability also exists to upload a file that can be viewed with the 'View Detailed Info' button. This capability could be used to scan and store a hardcopy of more detailed shipment information for access via this button. A sample shipment document is shown below:

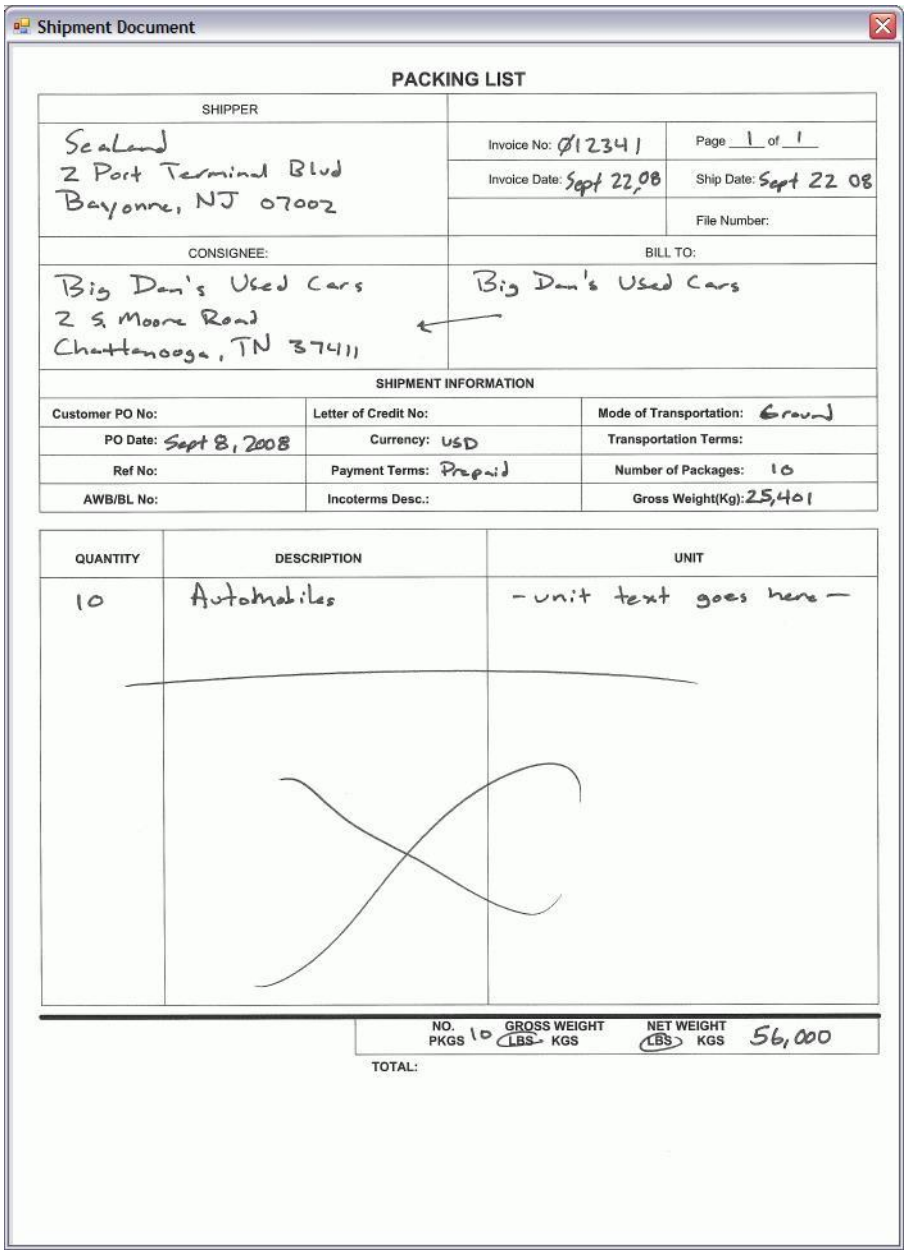

Shipment Document

PACKING LIST

SHIPPER		
Sealand 2 Port Terminal Blvd Bayonne, NJ 07002	Invoice No: Ø12341	Page 1 of 1
	Invoice Date: Sept 22,08	Ship Date: Sept 22 08
		File Number:

CONSIGNEE:	BILL TO:
Big Dan's Used Cars 2 S. Moore Road Chattanooga, TN 37411	Big Dan's Used Cars

SHIPMENT INFORMATION

Customer PO No:	Letter of Credit No:	Mode of Transportation: Ground
PO Date: Sept 8, 2008	Currency: USD	Transportation Terms:
Ref No:	Payment Terms: Prepaid	Number of Packages: 10
AWB/BL No:	Incoterms Desc.:	Gross Weight(Kg): 25,401

QUANTITY	DESCRIPTION	UNIT
10	Automobiles	-unit text goes here-

	NO. PKGS	GROSS WEIGHT LBS KGS	NET WEIGHT LBS KGS
TOTAL:	10		56,000

Figure 5. Screen Shot. Example Shipping Document.

Driver Authentication

As implemented in Phase A, the driver uses a username and PIN code to log into the OBC. The username is included in the inspection data set sent from the OBC to the TTMC. The TTMC uses the username to retrieve the simulated CDL# and name of the driver. In Phase B, authentication of this logon data was implemented. The TTMC compares the username and PIN with a list of known drivers <u>for that particular vehicle</u>. If there is a match, then the driver is authenticated, a 'driver authenticated' message is sent back and displayed on the OBC screen, and the TTMC associates the newly authenticated driver with the vehicle. If there is not a match, then the driver is not authenticated, a 'driver not authenticated' message is sent back and displayed on the OBC screen and the TTMC does not associate the driver with the vehicle.

The second stage of authentication messaging occurs when the vehicle approaches an inspection station. As the vehicle approaches, the inspection data set is sent from the OBC to the TTMC. The driver's username, whether authenticated or not, is provided within this data set. The TTMC will confirm whether or not the driver's username is currently associated with the vehicle. If the username is associated, then the driver was successfully authenticated and 'Authenticated' is indicated in the upper right-hand corner of the 'Driver Information' portion of the TTMC screen. Conversely, if the driver is not associated with the vehicle, 'Not Authenticated' is indicated in the upper right-hand corner of the 'Driver Information' portion of the TTMC screen.

The driver shall have successfully authenticated him/her-self with the TTMC in order to establish the vehicle as a Trusted Truck®. A vehicle without an associated, authenticated driver shall not be trusted. A driver that is not authenticated will not have access to the Trusted Truck® application, however, they will still be able to drive the vehicle. It is possible to implement a 'geo-fence' scheme in a future phase of the Trusted Truck® project wherein a non-authenticated driver will be unable to operate the vehicle beyond a specified geographical area, such as within the carrier's freight yard. If the non-authenticated driver attempts to drive outside of this geofence, the vehicle can be either completely disabled or limited in function.

Tractor and Trailer Weight

In Phase B, a production Load Maxx scale system capable of measuring weight at the tractor's drive and steer axles was installed. Similarly, a modified production Load Maxx scale system was installed on the trailer for measuring trailer weight. This data was added to the inspection data set sent from the OBC to the TTMC. A new 'Weights' tab was added to the 'Inspection Overview' portion of the TTMC screen to display this information. This new tab is shown below on the TTMC screen:

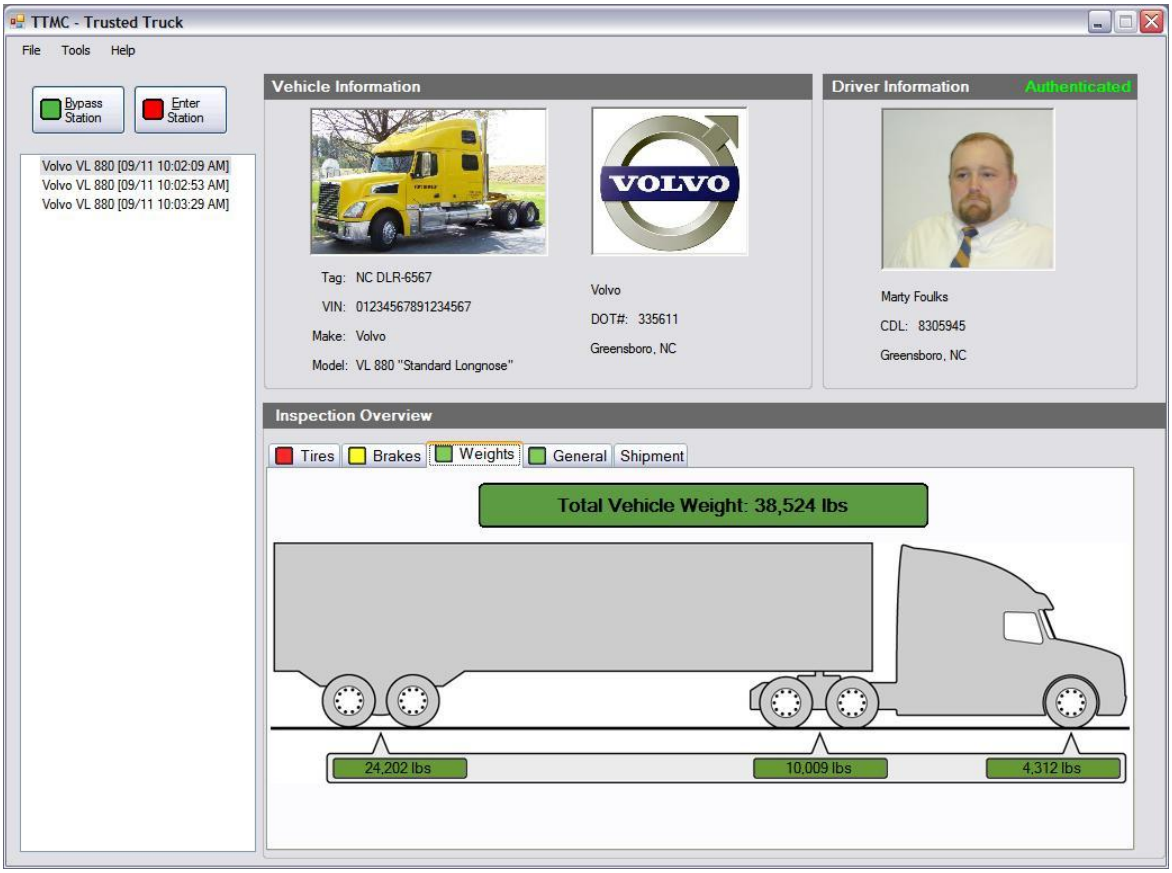

Figure 6. Screen Shot. Trusted Truck® TTMC New Screen with Weight.

Updated Inspection Data set

The driver and vehicle-related data provided by the OBC to the TTMC is listed below. New data included in Phase B is shown in *italics*:

- Vehicle Identification Numbers (VIN) for the tractor and trailer
- US Department of Transportation number (US DOT#)
- License plate number and issuing state abbreviation for the tractor and trailer
- International Fuel Tax Agreement (IFTA) number
- Identifying description of the tractor (color, type [daycab or sleeper] and make [Volvo])
- Identifying description of the trailer (type, color if applicable)
- Tractor tire pressure and temperature
- *Trailer tire pressure and temperature*
- *Tractor weight*
- *Trailer weight*
- Tractor lighting OK/NOK
- Fire extinguisher presence and operational OK/NOK

- Tractor Anti-lock Braking System OK/NOK
- Tractor brake system condition as reported by MGM's eStroke system
- Trailer brake system condition as reported by MGM's eStroke system
- Commercial Driver's License number (CDL#)
- Current seat belt usage

Lookup of Additional Information

The TTMC combines the inspection data received from the vehicle with additional information as retrieved from a data store on the TTMC. The relationship between the received inspection data and the additional information is provided in the following table. New data included in Phase B is shown in *italics*:

Table 1. Trusted Truck® Data Elements.

Group	Data
Driver's CDL#	First and Last Name
	Residential Address
	DMV Photograph
Tractor's USDOT#	Carrier's Name
	Carrier's Contact Information
	Carrier's Logo
Tractor's VIN	Make
	Model
	Year
	Type/Style
	Primary and Secondary (if applicable) Colors
Trailer's VIN	*Shipment – Origin Address*
	Shipment – Destination Address
	Shipment – Name/Description
	Shipment – Quantity
	Shipment – Weight

Wireless Trailer Communication and Trailer Lights and Cargo Security

The Trusted Truck® II Phase B project proposal included investigations of wireless trailer communication, trailer lights and cargo security. The proposal also included potential implementation of the recommended solution if time and budget allowed. The team was able to contain this implementation in the Phase B project.

The solution chosen for the Trusted Truck® II Phase B project is comprised of the following:

Tractor <> Trailer Communication: Bluetooth™ Wireless

Trailer Lighting System Monitoring: Local Current / Voltage Monitoring

Trailer Door / Content Monitoring: Door Position Sensing

A general purpose Input/Output (I/O) box, using a CAN communication bus, is used to gather the inputs, make logic determination, and send the results to the tractor over a CAN <> Bluetooth™ wireless link. A backup, solar-powered battery is used to power the system when the trailer is either not connected to the tractor, or when connected but the tractor ignition switch is off.

At the tractor, the CAN message is decoded and distributed to information displays used for notifying the operator of the status of the trailer systems. A schematic of the overall system is shown below:

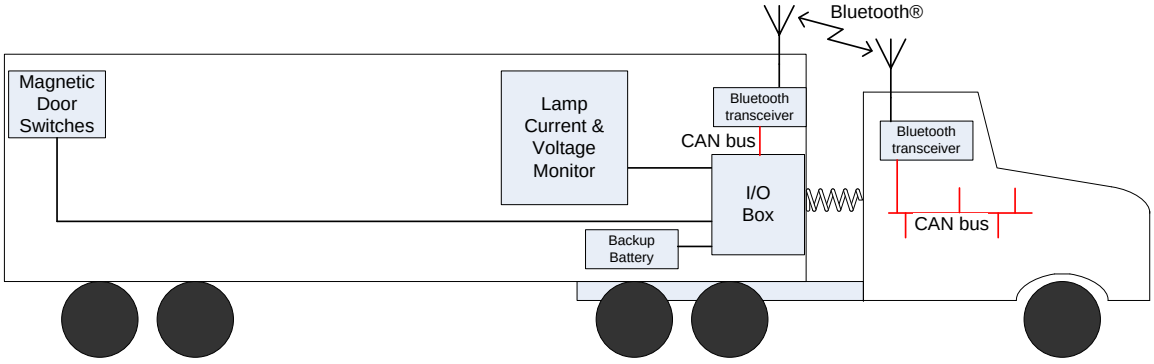

Figure 7. Illustration. Trailer Communication Architecture.

Chapter 4 – System Testing

Unit testing was performed as the various system units were completed followed by a gradual integration of the complete system and end-to-end testing in the Trusted Truck®. The test matrix is shown below:

Table 2. Test Matrix.

Test Description	Test Results
Bench test Trailer SmarTire CAN messages via CAN bus simulator and verify TTMC message transmission	Confirmed that the transmission layer, ASN.1, and TTMC have been updated to accommodate new signals from SmarTire
Bench test AirWeigh CAN messages via CAN bus simulator and verify TTMC message transmission	Confirmed that the transmission layer, ASN.1, and TTMC have been updated to accommodate new signals from AirWeigh system
Bench test AirWeigh and SmarTire ECUs and verify TTMC message transmission	Test conducted with AirWeigh and SmarTire ECUs connected to the system. Confirmed that ECU hardware responds as expected and works correctly on the truck communications network
Test trailer lighting CAN message via CAN bus simulator and verify TTMC message transmission.	Confirmed that the transmission layer, ASN.1, and TTMC have been updated to accommodate new signals from trailer lighting ECU
Bench test trailer lighting ECU to detect lamp and door status and transmit CAN message.	Confirmed that the trailer lighting ECU correctly detects normal, overcurrent and undercurrent, and transmits the correct message over CAN layer
Bench test trailer ECU transmission via Bluetooth™ to cab network	Confirmed that tractor/trailer communications is functional and that CAN messages are handled correctly
End-to-end test in truck. Manually initiate TTMC message from cab. Verify Trailer SmarTire, AirWeigh, and lighting ECU messages are reflected in TTMC display	Confirmation of installation into truck and that all system components are completely functional as installed is scheduled to be completed by Jan 31-2009.
Final end-to-end test through Volvo's test bed inspection zone in Greensboro, NC	Complete system validation is scheduled to be completed by Jan 31-2009.

All implementation was successfully bench tested outside the test truck environment. Final end-to-end testing inside the test truck of all new features is scheduled to be completed by January 31, 2009, and will be reported on in Phase C of the Trusted Truck® project.

Chapter 5 – Investigations

Truck Priority at Traffic Signals

Volvo provided latency data to support the UT Truck Priority at traffic signals project.

USDOT/FMCSA Data

UT began reviewing the wireless roadside data requirement related to the wireless roadside inspection. This effort is ongoing.

Wireless Trailer Communication

This study investigates the technologies and available hardware for enabling wireless communication between a trailer and its connected tractor. After analyzing the technologies currently available on the market, a Bluetooth™ short-range wireless configuration was selected for the Trusted Truck® Phase B project. Refer to Appendix C for the full report.

Trailer Lights and Cargo Security

This study explores the technologies and available hardware for monitoring and reporting the status of the trailer lights and the trailer or cargo door. Refer to Appendix D for the full report.

Chapter 6 – Conclusions

Lessons Learned

Major lessons learned in this phase of the project surround the investigations into wireless trailer communication, trailer lights and cargo security.

- Technologies successfully implemented:
    - Bluetooth™ wireless J1939 transceiver
    - Trailer lamp current sensing

Next Steps

The Trusted Truck® project will continue with Phase C in early 2009 and conclude with Phase D in July 2010. The ultimate goal of the Trusted Truck® project, culminating with Phase D, is to deliver a demonstration with two scenarios in which a Trusted Truck® compliance certificate is issued and is not issued for a test vehicle. This final demonstration would be performed through up to 2 states, with Tennessee, Kentucky, and North Carolina as potential candidates.

The proposed main focus of Phase C will be to:

- Develop the vision, implementation plan, and architecture development for Phase D.
- Perform a bench demonstration of the Phase D plan with the University of Tennessee potentially developing a VOLPE back office emulator that would allow the TTMC to send/receive messages to/from the FMCSA data base
- Cooperate with UT to develop message encryption, potentially with student involvement.

Other ideas discussed for potential inclusion in future phases of the Trusted Truck® project include:

- Issuing a state specific "Certificate of Trust" validating the tractor, trailer, driver and/or load
- Sending 'imminent threat' / catastrophic data (such as brake pressure at critically low level) to the TTMC.

Appendix A – System Requirements Specifications

Overview

The system shall be designed to facilitate a "wireless inspection" of a commercial vehicle as it approaches an inspection station. The concept encompasses vehicle data that can provide a profile of the vehicle that determines whether it is "trusted" enough to bypass the station or otherwise must enter the inspection station along with the general population (i.e. all other non-"Trusted Trucks"). A graphical system overview is below.

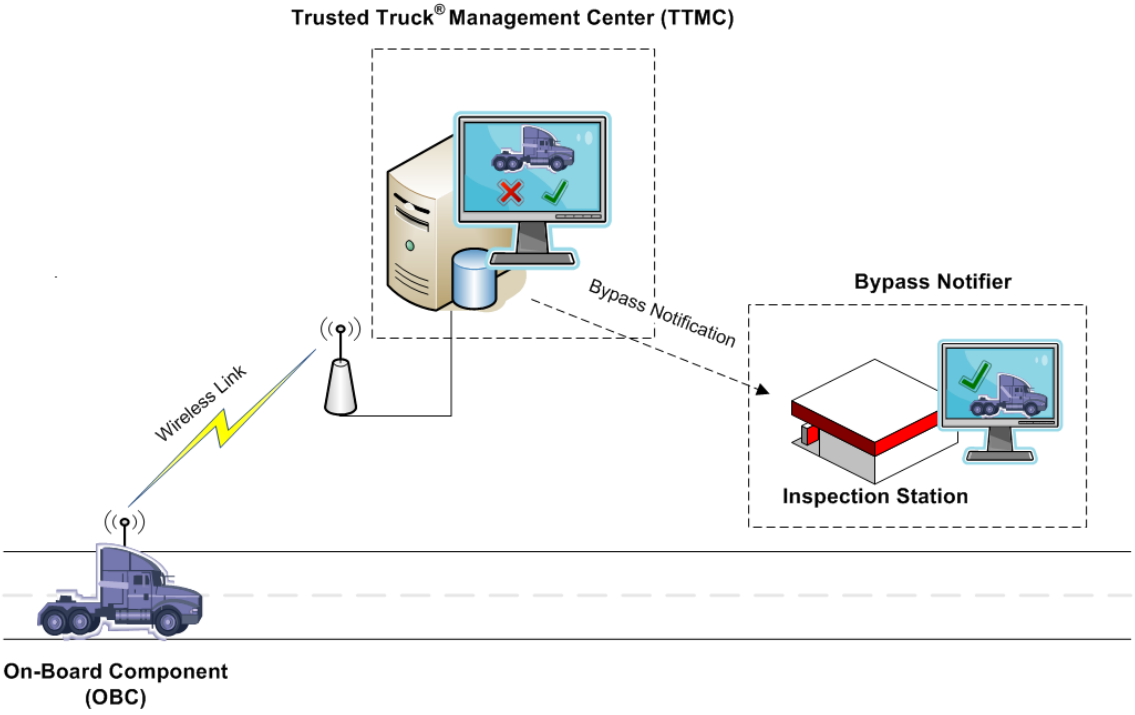

Figure 8. Diagram. System Architecture.

The system contains three parts, the On-Board Component (OBC), the Trusted Truck® Management Center (TTMC) and the Bypass Notifier. The On-Board Component resides in the vehicle, the TTMC resides at a (potentially) off-site location, and the Bypass Notifier resides at the inspection station. The OBC and the TTMC are communicating via a wireless communication link, while the TTMC and the Bypass Notifier use a wire link.

The TTMC will display the inspection data, received from the OBC, to the user and allow the user to respond with the approval or disapproval for bypassing the inspection station. The Bypass Notifier, when triggered by the TTMC, will provide notification to the inspection station's personnel when a “trusted” vehicle is cleared to bypass the inspection station. Additionally, the TTMC will be designed to support possible future functions that could enable historical records for each vehicle to establish "trust" in the vehicle and/or carrier with regard to inspections, leading to an incentive for vehicle operators to keep their vehicles' safety and maintenance standards high. As a further benefit, a future function of the TTMC will provide vehicle

operators with notification of failed wireless inspections. This will assist vehicle operators in keeping their vehicles' safety and maintenance standards high.

On approaching the inspection station, the OBC will collect inspection data from the vehicle's electronic systems and transfer the inspection data to the TTMC. The OBC will also provide a notification to the vehicle driver regarding the approval or disapproval of bypassing the inspection station (i.e. the result of the wireless inspection), as received from the TTMC . If the vehicle must enter the inspection station, the inspection station personnel are not notified of the failed wireless inspection and the vehicle is treated no differently than the general population (i.e. all other non-"Trusted Trucks").

Wireless Link

The OBC and TTMC shall communicate wirelessly via GSM according to the following diagram.

Figure 9. Illustration. Example of Wireless Link.

Sending of Inspection Data

When the vehicle approaches the inspection station, the OBC shall send vehicle and driver data to the TTMC. The approach distance at which this action is triggered shall be determined through testing in order to give ample time for the TTMC to analyze the received inspection data and respond to the vehicle, potentially allowing the vehicle to bypass the inspection station.

Vehicle Data

The OBC shall provide the following vehicle-related information to the TTMC:

- Vehicle Identification Numbers (VIN) for the tractor and trailer
- US Department of Transportation number (US DOT#)
- License plate number and issuing state abbreviation for the tractor and trailer
- International Fuel Tax Agreement (IFTA) number
- Identifying description of the tractor (color, type [daycab or sleeper] and make [Volvo])
- Identifying description of the trailer (type, color if applicable)
- Tractor tire pressure and temperature
- Trailer tire pressure and temperature
- Tractor weight

- Trailer weight
- Tractor lighting OK/NOK
- Fire extinguisher presence and operational OK/NOK
- Tractor Anti-lock Braking System OK/NOK
- Tractor brake system condition as reported by MGM's eStroke system
- Trailer brake system condition as reported by MGM's eStroke system

Driver Data

The OBC shall provide the following driver-related information to the TTMC:

- Commercial Driver's License number (CDL#)
- Current seat belt usage

Programmable Data

The following data shall be programmable without modifying the software in the OBC:

- Vehicle Identification Numbers (VIN) for the trailer
- US Department of Transportation Number (US DOT#)
- International Fuel Tax Agreement (IFTA) number
- License plate number and issuing state abbreviation for the tractor and the trailer
- Identifying description of the tractor (color, type [daycab or sleeper] and make [Volvo])
- Identifying description of the trailer (type, color if applicable)
- Commercial Driver's License number (CDL#)

Inspection Data Response

The TTMC shall provide approval or disapproval for bypassing the inspection station to the OBC after receiving the OBC's vehicle and driver data, giving the driver ample time to enter or bypass the inspection station. The TTMC's response may be generated manually by the user, or automatically by the TTMC.

Automatic Inspection Response Criteria

When the TTMC is configured to automatically generate inspection responses, the TTMC shall use the following criteria to determine if the vehicle is approved to bypass the inspection station.

At the instance the "wireless inspection" is performed, the vehicle shall not have[2]:

- A driver who is not logged-in
- One of more tires with a pressure condition reported as "extreme over pressure" or "extreme under pressure" by the vehicle's tire pressure monitoring system[3].

[2] The fire extinguisher presence and operational status, tractor ABS status, and driver seal belt usage data items are not part of the automatic inspection criteria.

- One or more brake assemblies reported as "non-functioning", "overstroke", or "dragging brake"[4].
- One or more brake assemblies reported as having "0% lining remaining"[5].

Driver Notification

The OBC shall notify the driver of the TTMC's approval or disapproval for bypassing the inspection station.

Inspection Data Display

The TTMC shall display the inspection data provided by a new vehicle approaching the inspection station.

Lookup of Additional Information

The TTMC shall combine the inspection data received from the vehicle with additional information as retrieved from a data store. The relationship between the received inspection data and the additional information is provided in the following table.

Table 3. Data Elements.

Group	Data
Driver's CDL#	First and Last Name
	Residential Address
	DMV Photograph
Tractor's USDOT#	Carrier's Name
	Carrier's Contact Information
	Carrier's Logo
Tractor's VIN	Make
	Model
	Year
	Type/Style
	Primary and Secondary (if applicable) Colors
Trailer's VIN	Shipment – Origin Address
	Shipment – Destination Address
	• Shipment – Name/Description
	• Shipment – Quantity
	• Shipment – Weight

Bypass Approval Notification

The TTMC shall trigger the Bypass Notifier to notify the inspection station's personnel when a "Trusted Truck" has been allowed to bypass the inspection station. The notification allows the

[3] The following conditions are allowed for any number of tires: "over pressure", "under pressure", "error indicator" and "not available".
[4] The following condition is allowed for any number of brake assemblies: "sensor error".
[5] The following condition is allowed for any number of brake assemblies: "10% lining remaining".

bypassing truck to be positively identified and prevents needless interception by law enforcement personnel.

Bypass Disapproval Concealment

The TTMC shall not provide a notification to the inspection station's personnel when a vehicle is not approved to bypass the inspection station (i.e. fails the wireless inspection). The "untrusted" vehicle is not to be flagged or examined any differently than a vehicle of the general population.

Driver Authentication

The driver shall have successfully authenticated him/her-self with the TTMC in order to establish the vehicle as a Trusted Truck®. A vehicle without an authenticated driver shall not be trusted.

Appendix B – Trusted Truck® II System Architecture Document

Architectural Views

Logical View

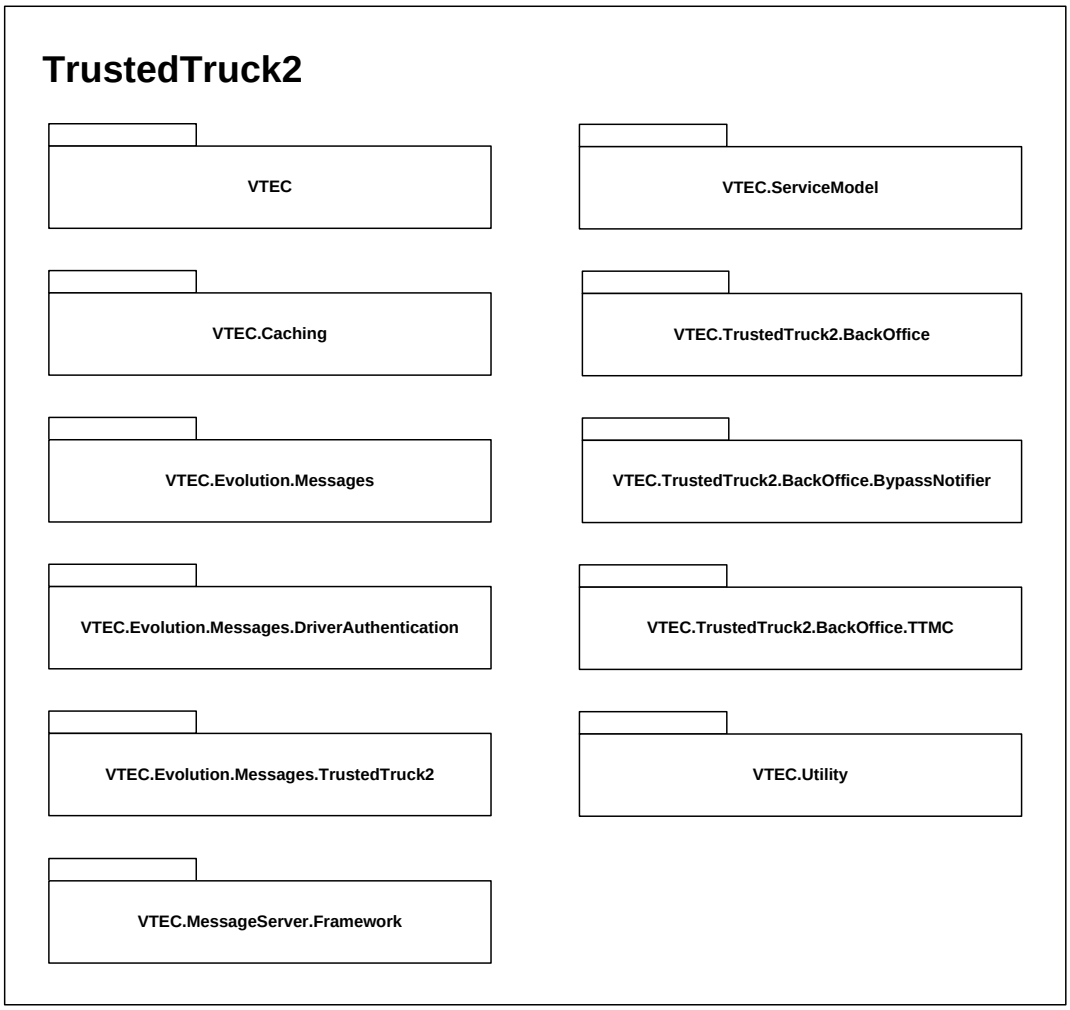

Figure 10. Illustration. Logical Architecture View.

VTEC

The VTEC package contains a set of proprietary classes and methods. They include engineering unit conversions, GPS support classes and enumerations and other general purpose code.

VTEC.Caching

This package provides a set of proprietary classes and methods supporting caching.

VTEC.Evolution.Messages

The VTEC.Evolution.Messages package defines an encapsulation class used by the TrustedTruck2 message and the DriverAuthentication message, and is specified in the implementation section of this document.

VTEC.Evolution.Messages.DriverAuthentication

The message transacted between the vehicle and the TTMC module is defined in this module. The detailed structure is specified in the implementation section of this document.

VTEC.Evolution.Messages.TrustedTruck2

This package defines the primary message transacted between the vehicle and the TTMC module. It is specified in the implementation section of this document.

VTEC.MessageServer.Framework

Package which defines the proprietary classes supporting the Volvo Messaging System.

VTEC.ServiceModel

Proprietary package used for general services such as error handling, logbook support, etc.

VTEC.TrustedTruck2.BackOffice

Defines the internal message passed between the TTMC module and the BypassNotifier module. The contents of this package are detailed in the implementation section of this document.

VTEC.TrustedTruck2.BackOffice.BypassNotifier

This package contains the methods, classes, and the graphical user interface associated with the Bypass Notifier module, and is fully specified in the implementation section of this document.

VTEC.TrustedTruck2.BackOffice.TTMC

Contains the methods, classes and graphical user interface associated with the Trusted Truck® Management Center, and is fully documented in the implementation section below.

VTEC.Utility

Proprietary package supporting general use enumerations and classes supporting general user interface windows.

Deployment View

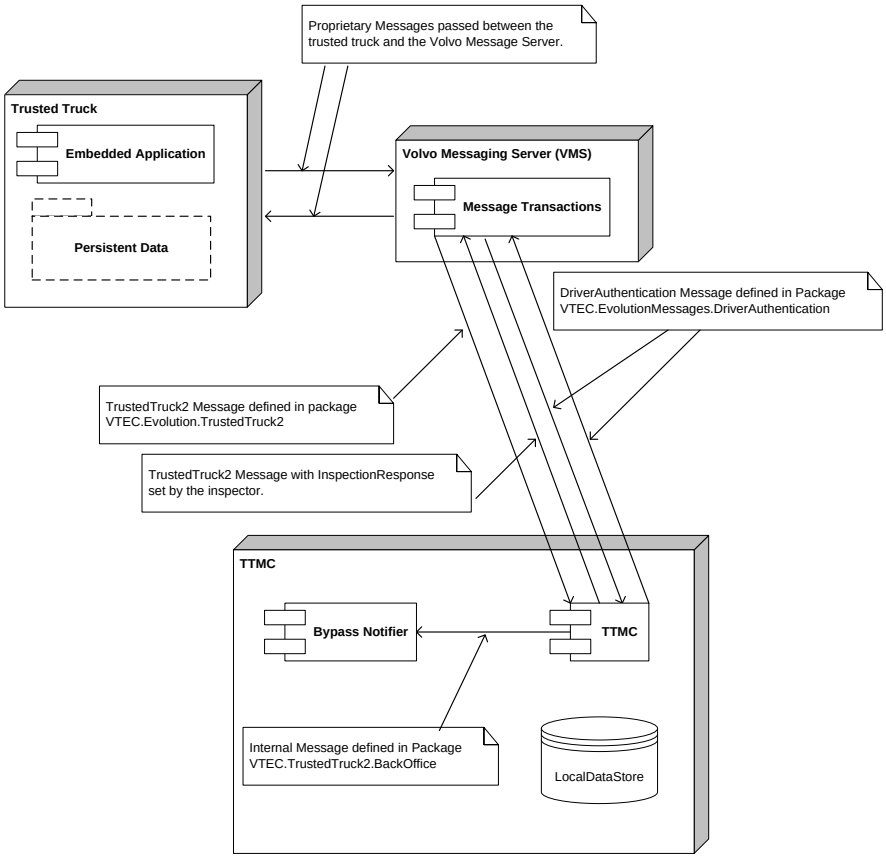

Figure 11. Diagram. Deployment View of Architecture.

"Trusted" Truck

The "trusted" truck consists of one or many embedded applications responsible for collecting sensor and other information while the truck is deployed, keeping track of the trucks current position, and when appropriate, packaging and transmitting that information via telematic gateway to the Volvo Messaging Server. These applications are specific to the original equipment manufacturer, and shall be considered proprietary from the perspective of this document. In addition, an embedded application is responsible for providing a method for entering the driver's identification, a PIN in this demonstrator package. The PIN is encapsulated into a message and transmitted for the purpose of driver identification as part of the Trusted Truck® philosophy.

Volvo Messaging Server

The Volvo Messaging Server consists of interfaces to one or many communications mediums, such as DSRC, WiFi, Cellular, Satellite, et.al. Messages passing through the server are passed to a consumer application inside the Volvo firewall structure, or to an addressed transceiver outside of the Volvo firewall. All aspects of the Volvo Messaging Server are proprietary to Volvo, and will not be detailed herein.

TTMC

The Trusted Truck® Management Center consists of two applications, TTMC and BypassNotifier. TTMC is responsible for providing a user interface to the inspecting officer to manually decide if a truck should be trusted, and thus be allowed to bypass the physical inspection station, or not. All inbound messages from the "trusted" truck are received by TTMC, including the TrustedTruck2Message, and the DriverAuthenticationMessage.

When a TrustedTruck2Message is received, the data is added to the internal inspection list making it available to the inspector. When an inspection has been processed, a TrustedTruck2Message is returned to the truck with Inspection Response, a Boolean value, set appropriately.

If the response was an approval to bypass, a Vehicle InspectionMessage is formatted from the data and sent to the BypassNotifier. This application is intended to display the fact that a bypass was granted thus preventing enforcement officer intervention.

Implementation View

VTEC.Evolution.Messages

Class BaseServiceMessage is the base class for all messages transacted through the Volvo Messaging Server, and is the only member of the package.

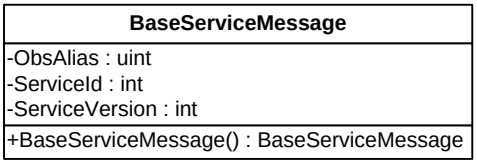

Figure 12. Chart. BaseServiceMessage

VTEC.Evolution.Messages.TrustedTruck2

The serialization and deserialization of this structure forms the basis of the TrustedTruck2 message. Note that BaseServiceMessage is the base class for this structure.

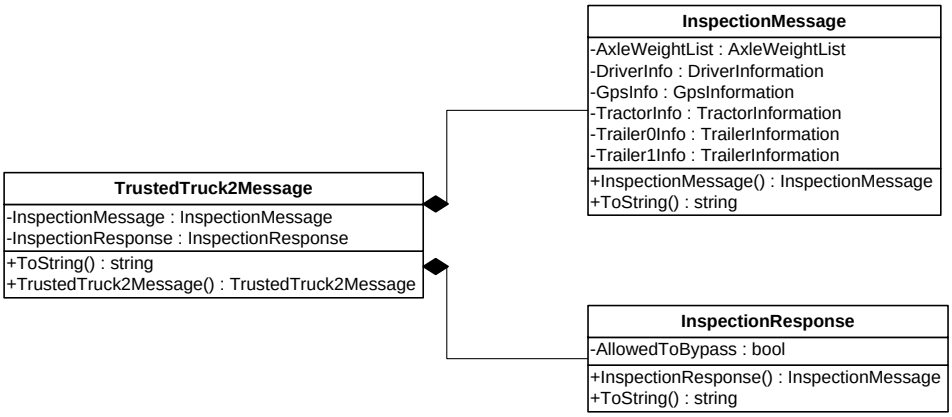

Figure 13. Chart. TrustedTruckMessage.

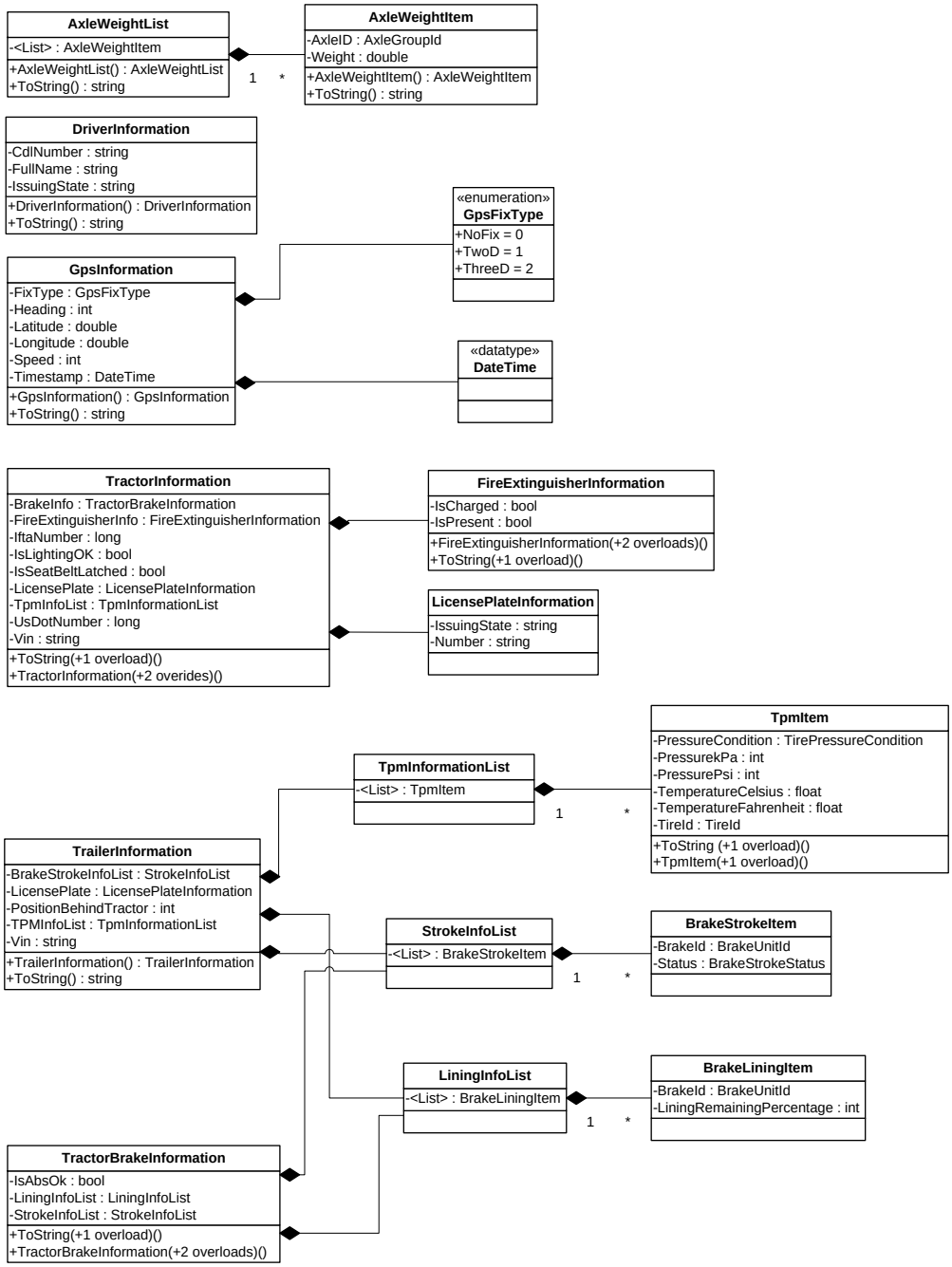

Figure 14. Chart. TrustedTruck2.InspectionMessage.

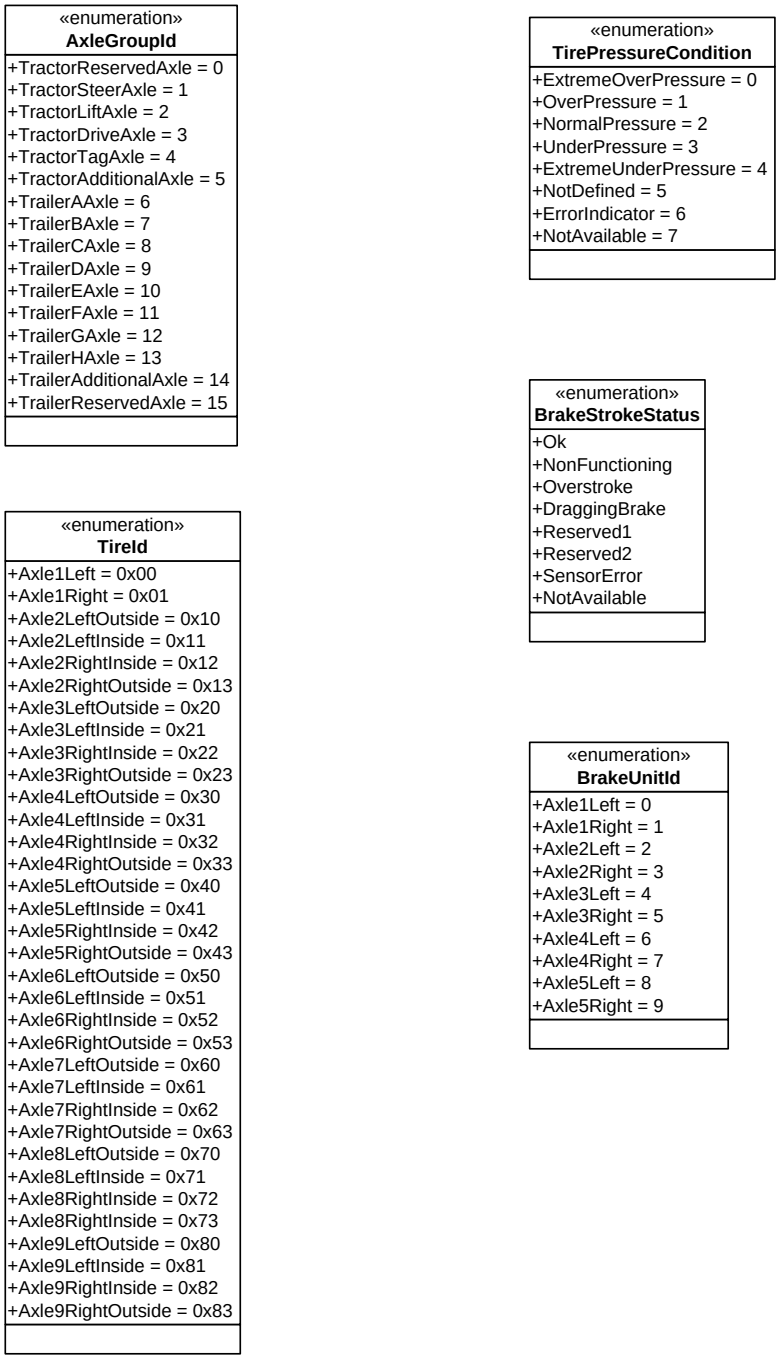

Figure 15. Chart. Enumerations used within TrustedTruck2.InspectionMessage.

VTEC.TrustedTruck2.BackOffice

Classes defined in this structure are the basis for messages passed within the TTMC.

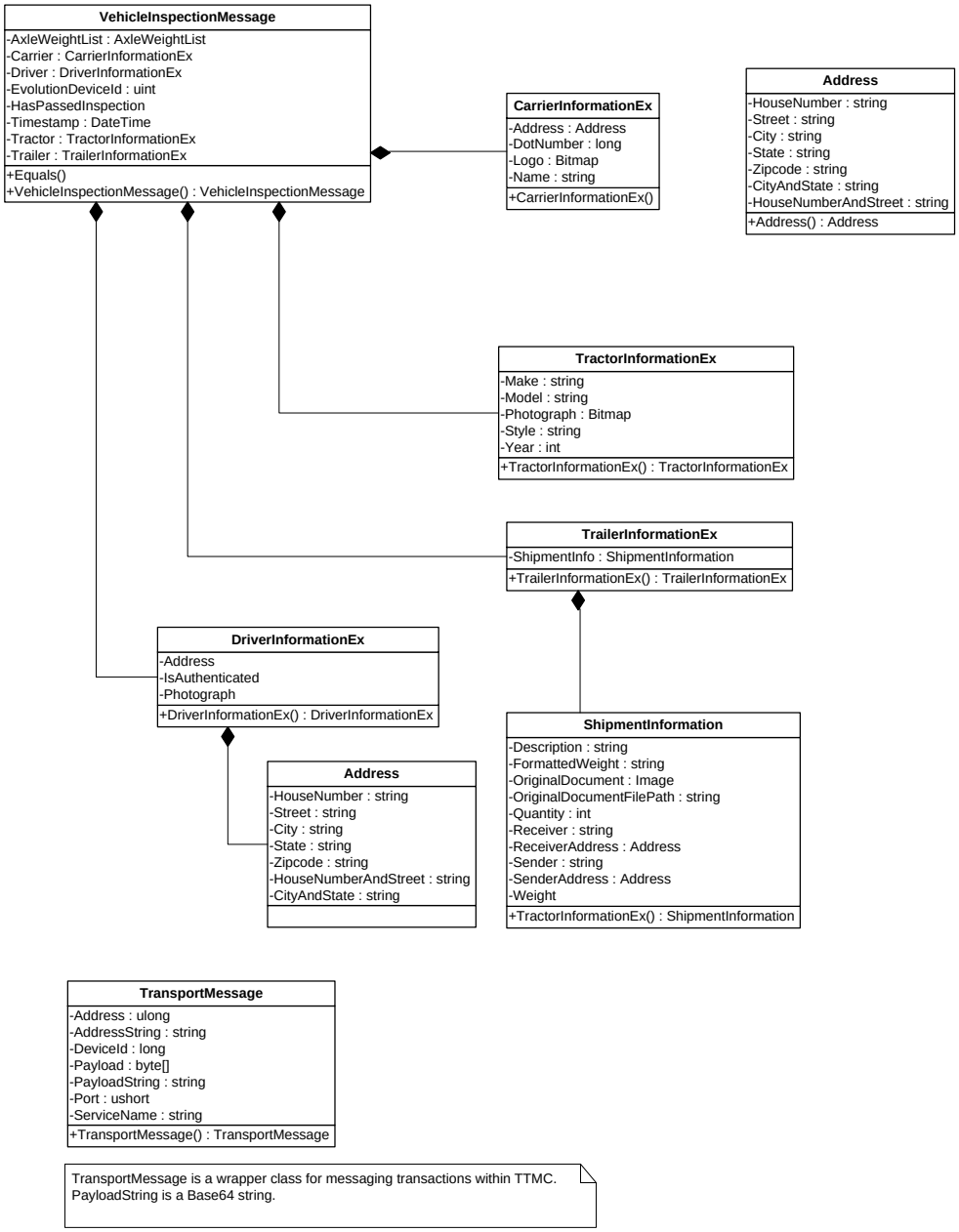

Figure 16. Chart. VehicleInspectionMessage.

VTEC.Evolution.Messages.DriverAuthentication

Classes defined in this structure are the basis for messages passed between TTMC and the trusted truck to authenticate the driver.

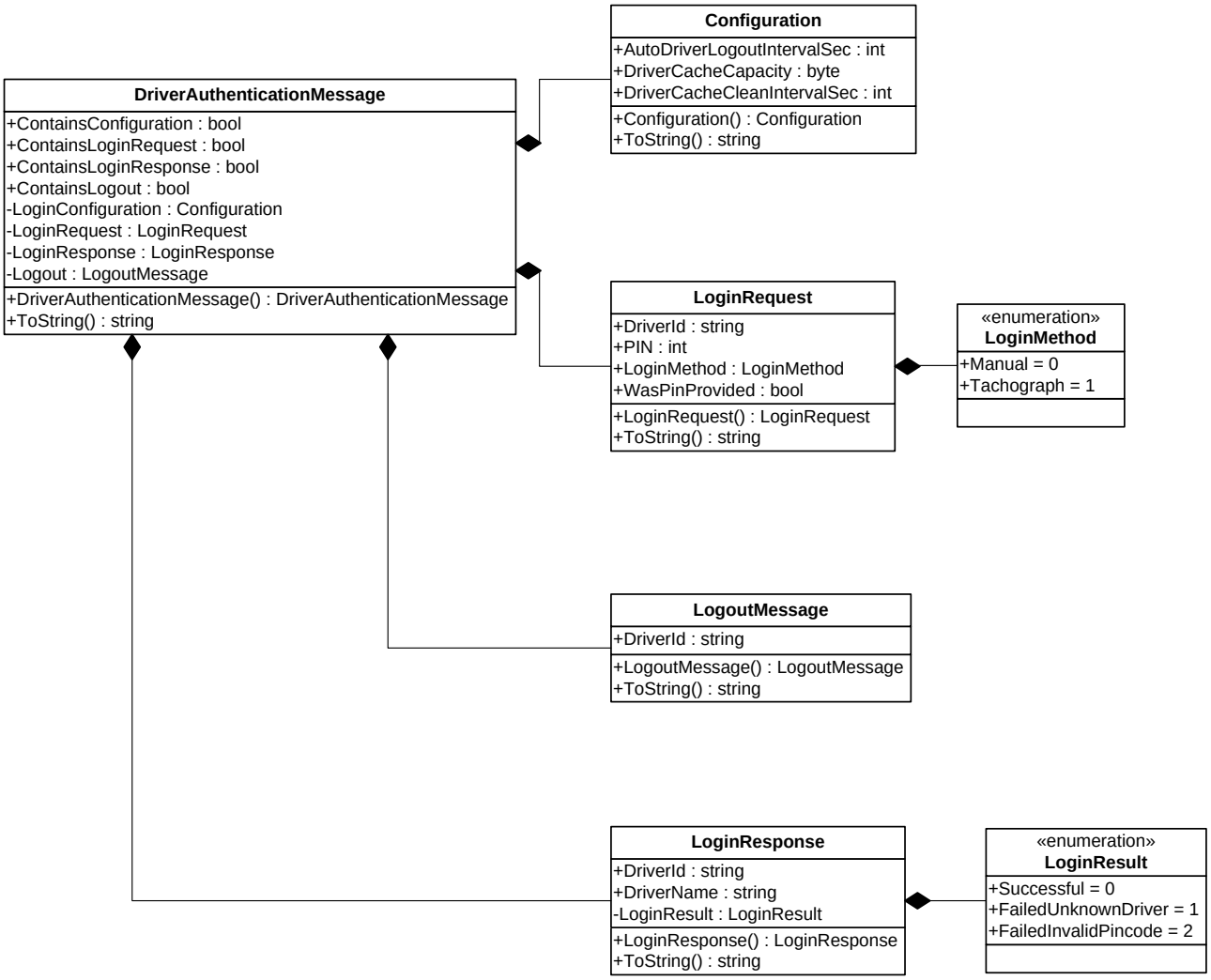

Figure 17. Chart. DriverAuthenticationMessage.

Table 4. Correlation of Trusted Truck® to SDMS.

SDMS Entity	*SDMS Data Item*	*Trusted Truck® Data Identifier*	*Data Type*	*Notes*
Carrier	USDOT number	TrustedTruck2Message.InspectionMessage.TractorInfo.UsDotNumber	long	Local TTMC Data Store
Carrier	Company name	VehicleInspectionMessage.Carrier.Name	string	Local TTMC Data Store
Vehicle	Tractor Vin	TrustedTruck2Message.InspectionMessage.TractorInfo.Vin	string	embedded persistent data store
Vehicle	Tractor license plate jurisdiction	TrustedTruck2Message.InspectionMessage.TractorInfo.LicensePlate.IssuingState	string	Local TTMC Data Store
Vehicle	Tractor license plate ID	TrustedTruck2Message.InspectionMessage.TractorInfo.LicensePlate.Number	string	Local TTMC Data Store
Vehicle	Tractor unit number	Not Available		
Vehicle	Brakes, Tractor	TrustedTruck2Message.InspectionMessage.TractorInfo.BrakeInfo	TractorBrakeInformation	on-board sensor
Vehicle	Brakes, Trailer 1	TrustedTruck2Message.InspectionMessage.Trailer0Info.BrakeStrokeInfoList	TrailerInformation	on-board sensor
Vehicle	Brakes, Trailer 2	TrustedTruck2Message.InspectionMessage.Trailer1Info.BrakeStrokeInfoList	TrailerInformation	on-board sensor
Vehicle	Tire pressure, Tractor	TrustedTruck2Message.InspectionMessage.TractorInfo.TpmInfoList	TractorBrakeInformation	on-board sensor
Vehicle	Tire pressure, Trailer 0	TrustedTruck2Message.InspectionMessage.Trailer0Info.TpmInfoList	TrailerInformation	on-board sensor
Vehicle	Tire pressure, Trailer 1	TrustedTruck2Message.InspectionMessage.Trailer1Info.TpmInfoList	TrailerInformation	on-board sensor
Vehicle	Vehicle location	TrustedTruck2Message.InspectionMessage.GpsInfo	GpsInformation	Satellite communication
Vehicle	Weight	TrustedTruck2Message.InspectionMessage.AxleWeightList	AxleWeightList	on-board sensor
Vehicle	Date	TrustedTruck2Message.InspectionMessage.GpsInfo.Timestamp	DateTime	on-board sensor
Vehicle	Time	TrustedTruck2Message.InspectionMessage.GpsInfo.Timestamp	DateTime	on-board sensor
Vehicle Status	Lighting	TrustedTruck2Message.InspectionMessage.TractorInfo.isLightingOK	Boolean	on-board sensor
Vehicle Status	Safety belt	TrustedTruck2Message.InspectionMessage.TractorInfo.isSeatBeltLatched	Boolean	on-board sensor
Driver	Jurisdiction	TrustedTruck2Message.InspectionMessage.DriverInfo.IssuingState	string	Local TTMC Data Store

SDMS Entity	*SDMS Data Item*	*Trusted Truck® Data Identifier*	*Data Type*	*Notes*
Driver	License ID	TrustedTruck2Message.InspectionMessage.Driver Info..CdlNumber	string	Local TTMC Data Store
Driver	First name	TrustedTruck2Message.InspectionMessage.Driver Info.FullName	string	Local TTMC Data Store
Driver	Last name	TrustedTruck2Message.InspectionMessage.Driver Info.FullName	string	Local TTMC Data Store
Driver	PIN/ID	VehicleInspectionMessage.Driver.isAuthenticated	Boolean	PIN number is not available
Driver Co-driver	Jurisdiction	Not Available		
Driver Co-driver	License ID	Not Available		
Driver Co-driver	First name	Not Available		
Driver Co-driver	Last name	Not Available		
Driver Co-driver	PIN/ID	Not Available		
Driver Log event data	Sequence ID	Not Available		
Driver Log event data	Status code	Not Available		
Driver Log event data	Date	Not Available		
Driver Log event data	Time	Not Available		
Driver Log event data	Latitude	Not Available		
Driver Log event data	Longitude	Not Available		
Driver Log event data	Place name	Not Available		
Driver Log event data	Place distance	Not Available		
Driver Log event data	Total vehicle miles	Not Available		
Driver Log event data	Event update status code	Not Available		
Driver Log event data	status code	Not Available		
Driver Log event data	Error code	Not Available		

SDMS Entity	*SDMS Data Item*	*Trusted Truck® Data Identifier*	*Data Type*	*Notes*
Driver Log event data	Update date	Not Available		
Driver Log event data	Update time	Not Available		
Driver Log event data	Update person ID	Not Available		
Driver Log event data	Update text	Not Available		
Driver Log data	24-hour period start time	Not Available		
Driver Log data	Multiday basis used	Not Available		
Equipment Identifier	Equipment ID (e.g., trailer unit #0)	TrustedTruck2Message.InspectionMessage.Trailer0Info.Vin	string	Local TTMC Data Store
Equipment Identifier	Equipment ID (e.g., trailer unit #1)	TrustedTruck2Message.InspectionMessage.Trailer1Info.Vin	string	Local TTMC Data Store
Equipment Identifier	Equipment license plate jurisdiction, trailer unit #0	TrustedTruck2Message.InspectionMessage.Trailer0Info.LicensePlate.IssuingState	string	Local TTMC Data Store
Equipment Identifier	Equipment license plate jurisdiction, trailer unit # 1	TrustedTruck2Message.InspectionMessage.Trailer1Info.LicensePlate.IssuingState	string	Local TTMC Data Store
Equipment Identifier	Equipment license plate ID, trailer unit #0	TrustedTruck2Message.InspectionMessage.Trailer0Info.LicensePlate.IssuingState	string	Local TTMC Data Store
Equipment Identifier	Equipment license plate ID, trailer unit #1	TrustedTruck2Message.InspectionMessage.Trailer1Info.LicensePlate.IssuingState	string	Local TTMC Data Store
Shipment Identifier	Shipping document number	VehicleInspectionMessage.Trailer.ShipmentInformation.OriginalDocument	Image	Local TTMC Data Store
Encounter Date/time	MM/DD/YYYY	Not Available		
Encounter Date/time	HH:MM:SS	Not Available		
Encounter Location	Latitude	Not Available		
Encounter Location	Longitude	Not Available		
Encounter Location	Encounter ID	Not Available		
Encounter Location	Triggering event	Not Available		
Transponder Identifier	Serial Number	VehicleInspectionMessage.EvolutionDeviceId		embedded persistent data store

ASN.1 Specification, Trusted Truck® II Message

```
--

-- This file defines the ASN.1 notation of the

-- Trusted Truck 2 Protocol used by the Dynfleet Evo applications.

--

-- Version: 1.0


TrustedTruck2Protocol DEFINITIONS AUTOMATIC TAGS ::=

BEGIN


        -- Protocol version

        tt2ProtocolVersion INTEGER ::= 1


        TrustedTruck2Pdu ::= CHOICE

        {

                inspectionMessage      InspectionMessage,     -- Mobile-originated

                inspectionResponse     InspectionResponse     -- Mobile-terminated

        }


        -- The OBC shall provide the following vehicle-related information to the RSC:

        --              Vehicle Identification Numbers (VIN ) for the tractor and up to two
trailers

        --              US Department of Transportation number (US DOT#)

        --              License plate number and issuing state abbreviation for the tractor and up
to two trailers

        --              International Fuel Tax Agreement (IFTA) number

        --              Identifying description of the tractor (color, type [daycab or sleeper]
and make [Volvo])

        --              Identifying description of the trailer(s) (type, color if applicable)

        --              Tire pressure and temperature

        --              Fire extinguisher presence and operational OK/NOK

        --              Tractor Anti-lock Braking System OK/NOK

        --              Tractor brake system condition as report by MGM's eStroke system


        -- The OBC shall provide the following driver-related information to the RSC:
```

```
--              Commercial Driver's License number (CDL#)

--              Current seat belt usage


InspectionMessage ::= SEQUENCE

{

        obsAlias                        INTEGER (1..4294967295),

        gpsInfo                         GpsInformation,

        tractorInfo                     TractorInformation,

        driverInfo                      DriverInformation,

        trailer0Info            TrailerInformation,

        trailer1Info            TrailerInformation OPTIONAL

}


InspectionResponse ::= SEQUENCE

{

        allowedToBypass         BOOLEAN

}


TractorInformation ::= SEQUENCE

{

        vin                                             UTF8String,

        licensePlate                    LicensePlateInformation,

        usdotNumber                             INTEGER (1..4294967295),

        iftaNumber                              INTEGER (1..4294967295),

        tpmInfoList                             TpmInformationList,

        fireExtinguisherInfo    FireExtinguisherInformation,

        isSeatBeltLatched               BOOLEAN,

        brakeInfo                               TractorBrakeInformation,

        isLightingOk                    BOOLEAN

}


TrailerInformation ::= SEQUENCE

{

        positionBehindTractor  INTEGER (0..1), -- #0 is connected directly to the tractor,
#1 is connected directly to the #0 trailer
```

```
        vin                                         UTF8String,
        licensePlate                  LicensePlateInformation,
        tpmInfoList                           TpmInformationList,
        strokeInfoList                BrakeStrokeInformationList
}

LicensePlateInformation ::= SEQUENCE
{
        number                UTF8String,
        issuingState   UTF8String -- Two character state abbreviation
}

-- Tire Pressure Monitor
TpmInformationList ::= SEQUENCE (SIZE (0..10)) OF TpmItem

-- Tire Pressure Monitor
-- TODO: Verify this, as we have nothing yet from the supplier (SmarTire?)
TpmItem ::= SEQUENCE
{
        tire                          TireId,
        pressurekPa                   INTEGER (0..1000),
        pressureCondition     TirePressureCondition,
        temperatureCelsius    INTEGER (-2730..17350) -- Temperature X 10 e.g. 100.5°C =>
1005
}

FireExtinguisherInformation ::= SEQUENCE
{
        isPresent      BOOLEAN,
        isCharged      BOOLEAN
}

GpsInformation ::= SEQUENCE
{
```

```
		timestamp		INTEGER (0..4294967295),		--
Position timestamp (seconds from 00:00:00 January 1 1970 UTC)

		latitude		INTEGER (-90000000..90000000),		--WGS84
decimal X 1000000 e.g. latitude 57.123456 => 57123456

		longitude		INTEGER (-180000000..180000000),	--WGS84
decimal X 1000000 e.g. longitude 10.123456 => 10123456

		isSpeedHeadingValid	BOOLEAN,

		speedMetersSec		INTEGER (0..600),		--
Meters/second X 10

		heading			INTEGER (0..360),
	--Decimal compass degrees

		fixType			ENUMERATED

				{

					none	(0),

					twoD	(1),

					threeD	(2)

				}

	}


	TractorBrakeInformation ::= SEQUENCE

	{

		isAbsOk		BOOLEAN,

		liningInfoList BrakeLiningInformationList,

		strokeInfoList BrakeStrokeInformationList

	}


	BrakeLiningInformationList ::= SEQUENCE (SIZE (0..10)) OF BrakeLiningItem

	BrakeStrokeInformationList ::= SEQUENCE (SIZE (0..10)) OF BrakeStrokeItem


	BrakeLiningItem ::= SEQUENCE

	{

		axle				BrakeUnitId,

		liningPercentRemaining INTEGER (0..100)

	}


	BrakeStrokeItem ::= SEQUENCE

	{
```

```
        axle                    BrakeUnitId,
        strokeStatus   BrakeStrokeStatus
}

DriverInformation ::= SEQUENCE
{
        fullName                UTF8String,
        cdlNumber               UTF8String,
        issuingState   UTF8String -- Two character state abbreviation
}

BrakeUnitId ::= ENUMERATED
{
        -- Naming scheme mostly follows J1939 PGN 64881
        -- "Brake Actuator Stroke Status" axle identifications, but
        -- is combined with PGN 65196 "Wheel Brake Lining Remaining Information"
        -- so that this enumeration can eventually be used for both tractor &
        -- trailer lining and tractor & trailer stroke.
        -- The tractor/trailer identification is handled by the
        -- context of the encoding/decoding methods.

        -- Numbered front to back, #1 being the steering axle
        axle1Left,
        axle1Right,

        axle2Left,
        axle2Right,

        axle3Left,
        axle3Right,

        axle4Left,
        axle4Right,
```

```
        axle5Left,

        axle5Right

    }


    TirePressureCondition ::= ENUMERATED

    {

        -- Follows J1939 SPN 2587 "Tire Pressure Threshold Detection"

        extremeOverPressure          (0),   -- Tire pressure is at a level where the
safety of the vehicle may be jeopardised

        overPressure                 (1),   -- Tire pressure is higher than the pressure
defined by the vehicle or tire manufacturer

        noWarningPressure            (2),   -- Tire pressure is within the thresholds
defined by the vehicle or tire manufacturer

        underPressure                (3),   -- Tire pressure is lower than the pressure
defined by the vehicle or tire manufacturer

        extremeUnderPressure   (4),   -- Tire pressure is at a level where the safety of
the vehicle may be jeopardised

        notDefined                           (5),

        errorIndicator               (6),

        notAvailable                 (7)

    }


    BrakeStrokeStatus ::= ENUMERATED

    {

        -- Follows stroke status of J1939 PGN 64881 SPNs 3785-3804

        -- "Tractor/Trailer Brake Stroke Axle 1-5 Left/Right"

        ok                           (0),

        nonFunctioning (1),

        overstroke            (2),

        draggingBrake  (3),

        reserved1             (4),

        reserved2             (5),

        sensorError           (6),

        notAvailable   (7)

    }


    TireId ::= ENUMERATED
```

```
{
        -- TireId values are set according to the J1939 SPN 929 "Tire Location"
        -- to make the conversion easier from the FMS/J1939 "Tire Location"
        -- to this ASN.1 TireId enumeration

        -- Leading axle
        axle1Left                    (0), -- 0x00
        axle1Right                   (1), -- 0x01

        axle2LeftOutside      (16), -- 0x10
        axle2LeftInside              (17), -- 0x11
        axle2RightInside      (18), -- 0x12
        axle2RightOutside     (19), -- 0x13

        axle3LeftOutside      (32), -- 0x20
        axle3LeftInside              (33), -- 0x21
        axle3RightInside      (34), -- 0x22
        axle3RightOutside     (35), -- 0x23

        axle4LeftOutside      (48), -- 0x30
        axle4LeftInside              (49), -- 0x31
        axle4RightInside      (50), -- 0x32
        axle4RightOutside     (51), -- 0x33

        axle5LeftOutside      (64), -- 0x40
        axle5LeftInside              (65), -- 0x41
        axle5RightInside      (66), -- 0x42
        axle5RightOutside     (67), -- 0x43

        axle6LeftOutside      (80), -- 0x50
        axle6LeftInside              (81), -- 0x51
        axle6RightInside      (82), -- 0x52
        axle6RightOutside     (83), -- 0x53
```

```
        axle7LeftOutside      (96), -- 0x60
        axle7LeftInside               (97), -- 0x61
        axle7RightInside      (98), -- 0x62
        axle7RightOutside     (99), -- 0x63

        axle8LeftOutside      (112), -- 0x70
        axle8LeftInside               (113), -- 0x71
        axle8RightInside      (114), -- 0x72
        axle8RightOutside     (115), -- 0x73

        axle9LeftOutside      (128), -- 0x80
        axle9LeftInside               (129), -- 0x81
        axle9RightInside      (130), -- 0x82
        axle9RightOutside     (131)  -- 0x83
}
END
```

Appendix C – Wireless Trailer Communication

A commercial tractor is a complex machine, with a myriad of data collection devices befitting its complexity. The connected trailer is extremely simple in comparison, but can contain a shipment that is equal to, or even greater than, the value of the tractor. So it is an oversight not to have sensors on the trailer to monitor and protect not only the trailer, but also the shipment.

However, the cost of adding devices to the trailers generally outweighs the benefits of those devices. In the past, various technologies have been evaluated and used in the commercial vehicle industry to communicate between the tractor and the trailer, but none have been used consistently enough to be effective. Most of the existing technologies have been wired, either through adding additional cabling between the tractor and trailer or by utilizing PLC technology to communicate over the existing cables. The objective of this study is to investigate if a wireless option could be used effectively.

Wireless communication between a tractor and its connected trailer could provide trailer and shipment-related data to the driver and the carrier, allowing for increased driver, vehicle, and shipment security and efficiency. The trailer could now assist the driver and the carrier with the following information without further complicating the trailer hook-up process and allowing the driver to work as he/she does currently.

- Tire monitoring (under/over-pressure, blowouts, etc.) using a tire pressure monitoring system
- Brake monitoring (wear/maintenance notifications, over-temp, dragging or non-functional brake alarms) using brake stroke and/or brake pad sensors
- Trailer lighting status (non-functioning bulbs and lighting circuits) using current measuring sensors
- Shipment security using trailer door switches and “electronic fence” devices
- Shipment monitoring using interior temperature and refrigeration unit sensors

Each wireless technology has its application domain; that is, the uses it was designed to fulfill. The proper system configuration is critical in order to utilize each wireless technology, and its implementing devices, effectively. This study will cover the various wireless technologies, compare the possible wireless configurations and available devices that could be used, and propose recommended next steps, with specific hardware, as possible ways to achieve wireless tractor-to-trailer communication.

After researching the wireless devices currently on the market, there are three technologies in use that stand out. These are short-range, security-friendly wireless technologies that could provide the desired communication link between a tractor and its trailer.

Bluetooth™ Short-range Wireless

Bluetooth™ is a short-range wireless protocol used to create personal area networks, (i.e. networks in the “personal space”). The intent of Bluetooth™ is to connect various devices with a single digital, secure wireless protocol. Bluetooth™ utilizes the globally unlicensed Industrial Scientific, and Medical (ISM) 2.4 GHz radio spectrum to provide

a typical gross data rate of 1 Mb/sec, with version 2 achieving up to 3 Mb/s, at a range of between 3 to 300 feet (1 to 100 meters).

Bluetooth™ Bridge Configuration

In this configuration, a J1939 bus in installed on the trailer and two Bluetooth™-capable J1939 devices form the wireless link between the two J1939 busses on the tractor and the trailer. This allows J1939 devices on the tractor (i.e. the TGW) to communicate with J1939-capable devices installed on the trailer.

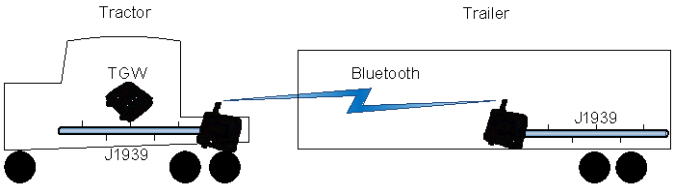

Figure 18. Illustration. Bluetooth™ Configuration.

The Bluetooth™ link would be established when the trailer is connected to the tractor's power supply, which also powers the trailer's J1939 bus and the connected devices. The eavesdropping by a third-party on the tractor's J1939 traffic could be prevented by putting the tractor's Bluetooth™-capable J1939 device into a write-only mode, whereas it would only allows message to be written to the J1939 bus. This would allow the trailer's data to be passed to the tractor's J1939 bus, but would not allow access to the messages on the tractor's J1939 bus. Additional security could be provided by the filtering of J1939 Source Addresses and PGNs allowed to be written to the tractor's J1939 bus by the tractor's Bluetooth™ device.

Bluetooth™ Evaluation

Table 5. Bluetooth™ Evaluation.

Pros	Cons
+ Numerous third-party J1939 devices available for implementing trailer-based features + Secure as specified, excluding a theoretical attack on the pairing process + Could possibly support a 100% J1939 bus load + No custom software required to communicate with the TGW	– The J1939 bus needs to be installed on the trailer – Implementations are possibly unsecure, depends on the chosen device (found 2 devices on the market) – Theoretically possible to crack Bluetooth's™ security architecture[6] but mitigation may be possible by strengthening the pairing configuration/process

[6] "Cracking the Bluetooth PIN", http://www.eng.tau.ac.il/~yash/shaked-wool-mobisys05/

Available Products

RM Michaelides CANlink Bluetooth™

Table 6. CANlink Bluetooth™.

Pros	Cons
+ IP 65 intrusion protection rating + Supports write-only access to J1939 + Supports filtering of up to 16 PGNs "on each side of the bridge" + $559.35 per unit (excluding accessories)	– IP 65 only protects against "water projected by a nozzle against enclosure from any direction," which may not be enough

IXXAT CANblue/Generic

Table 7. CANblue/Generic.

Pros	Cons
+ Supports filtering the "data exchange via Bluetooth™"	– "Stable metal" housing probably not good for much – $935.00 per unit (excluding accessories)

802.11 WiFi

802.11 is a set of standards for wireless local area network communication that can be thought of as "wireless Ethernet", due to the similar use and range of both protocols. It allows for local area networks to be deployed in situations where cables cannot be run, as well as allowing peer-to-peer connectivity directly between supporting devices. The 802.11 family utilizes the 2.4GHz ISM and the unlicensed 5GHz bands to achieve gross data rates of typically 4.5 Mb/s for 802.11b to 19 Mb/s for the 802.11g standard, both at a range of up to 460 feet (140 meters).

802.11 WiFi Bridge

In this configuration, two 802.11-capable J1939 devices form the wireless link between the tractor and the trailer, allowing J1939 devices on the tractor to communicate with J1939 devices installed on the trailer. The 802.11 link would be established when the trailer is connected to the tractor's power supply, which also powers the trailer's J1939 bus.

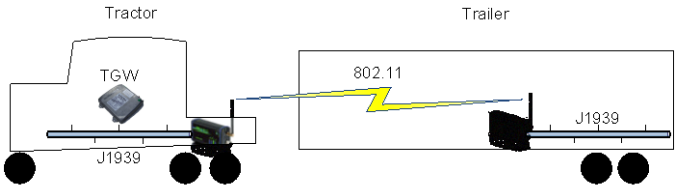

Figure 19. Illustration. WiFi Bridge.

802.11 WiFi Evaluation

Table 8. 802.11 WiFi Evaluation.

Pros	Cons
+ Numerous third-party J1939 devices available for implementing trailer-based features + Higher bandwidth fully supports a 100% J1939 bus load + No custom software required to communicate with the TGW	– The J1939 bus needs to be installed on the trailer – Longer range than necessary could be a security concern

Available Products

RM Michaelides CANlink WLAN

Table 9. CANlink WLAN.

Pros	Cons
+ IP 65 intrusion protection rating + Supports WPA2 encryption + $757.35 per unit	– Only supports WEP encryption, which has already been broken – IP 65 only protects against “water projected by a nozzle against enclosure from any direction”, which may not be enough

CubicLabs SenseNet WLAN

Table 10. SenseNet WLAN.

Pros	Cons
+ Currently in use in commercial and military vehicle applications + Can run user code + Supports WPA + IP 65 intrusion protection rating	– $995.00 per unit – IP 65 only protects against “water projected by a nozzle against enclosure from any direction”, which may not be enough

ZigBee® Mesh Network

ZigBee® is a short-range wireless protocol also used to create personal area networks. ZigBee® is intended to be simpler and less expensive than other wireless protocols, and is focused on applications that require a low data rate, long battery life, and secure communication. ZigBee® is unique in that it uses mesh networking to provide simplicity (new devices are discovered and automatically added to the network), high reliability (the “mesh” gives a message many possible paths to its destination), and longer range (the “mesh” allows the network to extend out from the furthest member of the network, not just from a central point). ZigBee® utilizes several

unlicensed radio bands, including the 900MHz and 2.4GHz ISM bands, to achieve data rates of 40 kb/s and 250 kb/s, respectively, with a range of 33 to 240 feet (11 to 73 meters).

ZigBee® Mesh Network Configuration

In this configuration, a mesh network created by a group of ZigBee®-capable devices forms the wireless link between the tractor and the trailer. The trailer's mesh network would reach all ZigBee® devices on the trailer, and would reach the tractor's ZigBee® device when the trailer is connected. The tractor's TGW would join and communicate with the trailer's ZigBee® network via a ZigBee® modem connected to the TGW's spare serial port, since ZigBee®-capable J1939 devices do not (yet) appear to be on the market. The trailer's ZigBee® devices could either be powered from the tractor or each of them could be battery –powered, since ZigBee® was designed for low-power consumption. Although the bandwidth of a ZigBee® network is limited, the reduced amount of J1939 traffic on the trailer from its few sensors should fit within the capacity of the network.

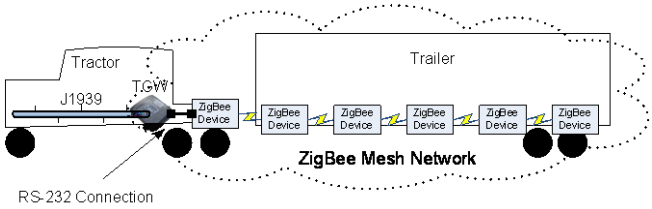

Figure 20. Illustration. ZigBee® Mesh Network Configuration.

ZigBee® Evaluation

Table 11. ZigBee® Evaluation.

Pros	Cons
+ No J1939 network needed on the trailer + Additional ZigBee® trailer devices would automatically connect themselves to the network + Supports AES encryption, which is used to protect "Top Secret" information by the NSA	– Only "bench testing" third-party ZigBee® devices available and those would likely require additional, custom hardware for trailer-based features – Cannot support a 100% J1939 bus load – Lack of ZigBee® development experience – Custom software needed to connect the ZigBee® network to the TGW

Wireless Trailer Communication Implementation

After analyzing the technologies available on the market, it was decided that for the Trusted Truck® Phase B project a Bluetooth™ short-range wireless configuration would be implemented and tested. Bluetooth™ was chosen over 802.11 WiFi mainly due to the security concerns using 802.11, along with its longer range. ZigBee® would be an interesting technology to explore in the future, but current availability of capable devices is limited.

The implemented configuration involves using an RM Michaelides CANlink Bluetooth™ bridge between the tractor and trailer and installing a J1939 bus on the trailer to support functionality provided by connected J1939 devices. The results of testing this configuration are documented earlier in this report.

Appendix D – Trusted Truck® II/Trailer Monitoring Report

Purpose / Introduction

This report describes investigations and work related to Year 2 of the Trusted Truck® project.

(Project 104-01793-02 (TT2, Year2))

The purpose of the Trusted Truck® project is to give the regulation authorities assurances that the vehicles participating in the program have performed a "self evaluation" and can be trusted to be inspected electronically, without the need for physical inspection or intervention.

Earlier phases of the Trusted Truck® project focused on the tractor equipment and the driver, but those only partially address the real reason the commercial vehicle is on the road – to carry goods – typically via a trailer (or trailers) in the case of a highway tractor, or via an attached body in the case of a truck.

Year 2 of the Trusted Truck® project therefore expands the scope to include trailer lighting and door monitoring.

Basic Requirements

There are two basic requirements to be discussed in this report:

(1) Trailer lighting system monitor and/or diagnostics

- (a) Determination of the lighting status
- (b) Reporting of the lighting status

(2) Trailer door (or contents) monitoring

- (a) Determination of the door status
- (b) Reporting of the door status

Both requirements are in support of extending the Trusted Truck® "framework" to the trailer(s) and other towed vehicles (such as converter dollies, in the case of multiple trailers).

Constraints / Limitations

Trailer Lighting Monitoring / Diagnostics

The status of lighting on the trailer is often overlooked, since it often a case of "out of sight, out of mind". Depending on the type of trucking operation, a particular driver and tractor can see multiple trailer pickups and drop-offs per day, or they may have a dedicated trailer assigned to the tractor at all times.

Each case presents different opportunities for proper inspection of the trailer during the required pre- and post-trip inspections, but even in an ideal world the trailer lighting is often overlooked and neglected.

Any solution meant to address the monitoring of the trailer lighting system must deal with several constraints or realities:

- Different lighting technologies (incandescent versus Light Emitting Diode (LED)) require different monitoring techniques because of the currents involved.
- Different "interpretations" of FMVSS / CMVSS 108 requirements (trailer lighting and conspicuity), often resulting in inconsistent quantity of lighting on trailers. FMVSS 108 lists the *minimum* amount and configuration of lighting required, but we often see customization / personalization of trailer lighting, typically the addition of so-called "chicken lights"
- Multiple trailer / towed vehicle combinations (worst case, 3 trailers and 2 dollies) present a wide dynamic range of "standard" or "acceptable" lighting loads.
- A mixed fleet of tractors and trailers – all trailers must be (to the largest extent possible) backwards-compatible with all of the tractors in existence, and vice-versa.
- The typical "Achilles heels" of trailer lighting – the interconnecting cable (SAE J560) is notoriously abused and failure-prone, the trailer lighting / harnessing is under constant attack from the elements (road spray / de-icing chemicals), and the long wiring lengths involved guarantee that the devices farthest from the source (tractor) will be starved for voltage…

Many of the constraints above suggest that the determination of whether the trailer's lighting is working or not, belongs in the trailer itself.

Trailer Door (or Contents) Monitoring

Monitoring of the trailer contents can be as simple as monitoring the door(s) – assuming they are the only point of entry or exit for goods – or can be as complex as logging the entry and exit of all contents via RFID tags or similar. For the purposes of this report, we will focus only on door monitoring as a means to secure the cargo, but will mention several other possibilities as well.

Solutions for addressing cargo monitoring could have the following constraints or variables:

- Different trailer configurations (van, reefer, side-curtain, flatbed, tanker, dry bulk, auto hauler, etc.) each have their own different needs and vulnerabilities.
- Even in a given trailer configuration, the range of different cargo or loads which are possible all bring different constraints of their own, in terms of what techniques can be used to track or protect the cargo.
- Protection of the contents of the trailer must function whether or not the trailer is coupled (electrically and/or mechanically) to the tractor.
- Protecting the contents of the trailer must include the possibility that the thieves will steal the entire trailer for later "entry" …
- Any system used for protecting the contents must not be vulnerable to vandalism, sabotage, or damage during normal loading / unloading of the trailer.

Potential Solutions

Since the two basic requirements both deal with the monitoring of some function and reporting that status to the tractor (or operator), there are really three problems to solve – (a) monitoring of

the lighting, (b) monitoring of the door or contents, and (c) reporting the status of both the lighting and the contents.

We will look at potential solutions for each problem separately.

Reporting of the (lighting or door) Status from Trailer > Tractor

There are two basic schemes of transmitting data from the trailer to the tractor, and vice-versa:

(1) Wired, or

(2) Wireless

The topic of Wireless Tractor <> Trailer communication is the subject of a separate report, so this report will only touch on some of the Wired options.

The industry-standard wiring harness in common use in North America is defined by SAE (Society of Automotive Engineers) Recommended Practice J560. This specifies the 7-circuit connection between tractor and trailer which carries all lighting circuits as well as an "Auxiliary" circuit used for powering of trailer ABS (Antilock Brake System) or, if the trailer is not equipped with ABS, to be used at the operator's discretion.

All 7 circuits in the J560 connector are currently assigned, so there is no opportunity for using any circuits for direct indication of diagnostic information between the tractor and trailer.

In 2001, the North American truck industry adopted SAE J2497, a PLC (Power Line Carrier) scheme in which 9600-baud data is superimposed over the AUX power line, in order to transmit ABS fault information from the trailer to the tractor. This PLC data link could be used to transfer lighting and door status as well, and several vendors offer systems for transmitting non-ABS data over this link. Its primary drawback is the speed at which data is transmitted.

In Europe, the industry standard is to have two connections between tractor and trailer – one for lighting and trailer I/O, and one for databus. The databus link is defined by ISO 11992 and specifies a 125kbaud CAN (Controller Area Network) used for information sharing and control.

The North American market has been very reluctant to adopt an ISO 11992-like extra connection between the tractor and trailer. A proposal before the SAE which would essentially implement an ISO 11992-like connector (adapted for 12V systems) is likely to be passed as SAE J2691, but it is unknown if the industry will readily adopt the new connector.

In all of the monitoring scenarios presented below, it is assumed that some means exists – either wired or wireless – to transmit the status of the monitored system from the trailer to the tractor.

In many cases, it is also desirable to have data flowing from the *tractor to the trailer*, in order to provide a means for the trailer to understand the tractor's intentions separate from the SAE J560 connector.

Trailer Lighting Monitoring

(1) Solid State Lamp Control with Logic Inputs

In this scenario, solid state lighting control is used on the trailer. The intended state of the lamps is received via the standard 7-way (SAE J560) trailer cable, and the controller in turn drives the

individual circuits. The purpose of using solid state light control is so that the controller can monitor each circuit for open- and short-circuit situations.

The light controller is responsible for controlling the lights only on the trailer in which it is installed.

The status of the lighting is sent back to the tractor by any of the preferred means.

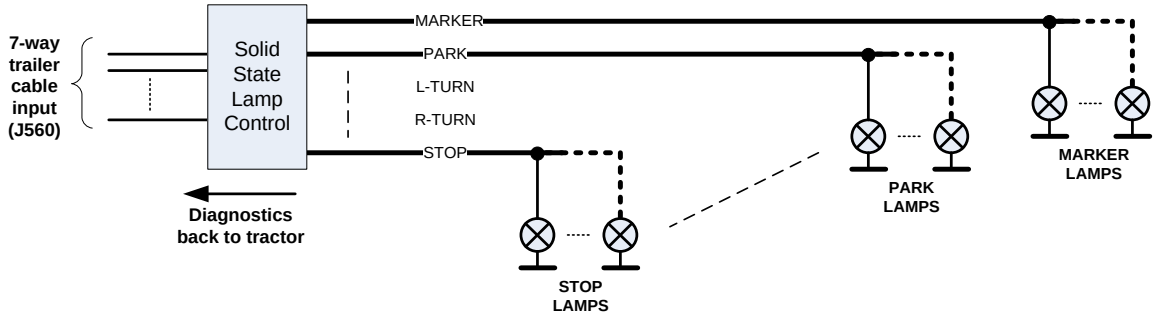

Figure 21. Illustration. Lamp Control.

<u>Benefits of this scenario:</u>

- Individual circuit diagnostics
- Backwards-compatible with older tractors if J560 inputs are used for intended-state logic detection, but also possible to build redundancy if databus commands are also used in parallel for intended light state (newer tractors)
- Good synchronization if 7-way used for logic inputs
- Easily retrofitted to existing trailers

<u>Drawbacks of this scenario:</u>

- Complex power-sharing
- Not easily customized
- Does not account for poor J560 connection (unless databus redundancy used)
- Adds failure modes

(2) Multiplexer / Demultiplexer with “Intelligent” Lamps

In this scenario, the intended state of the lamps is received via the standard 7-way (SAE J560) trailer cable, and in turn generates a multiplexed data signal to command individual lights. The “intelligent” / multiplexed lamps receive the signal from the controller, and monitor themselves for proper operation.

The status of the lighting is sent back to the tractor by any of the preferred means.

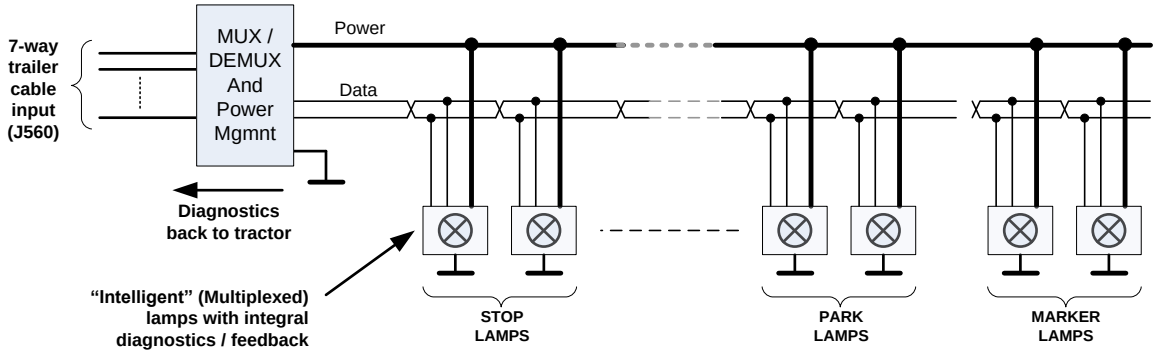

Figure 22. Illustration. MUX/DEMUX.

<u>Benefits of this scenario:</u>

- Individual lamp diagnostics, including possibility for individual optical feedback of lamp state
- Backwards-compatible with older tractors if J560 inputs are used for intended-state logic detection, but also possible to build redundancy if databus commands are also used in parallel for intended light state (newer tractors)
- Good synchronization if 7-way used for logic inputs

<u>Drawbacks of this scenario:</u>

- Costly, possibly too complex for the benefits?
- Complex power-sharing
- Not easily customized
- Not easily retrofitted to existing trailers
- Does not account for poor J560 connection (unless databus redundancy used)
- Adds failure modes

(3) Local Current / Voltage Monitoring

In this scenario, the trailer lamps are directly driven by the standard 7-way (SAE J560) trailer cable, but with the addition of current and voltage monitoring used to determine the operational state of the lamps. The status of the lighting is sent back to the tractor by any of the preferred means.

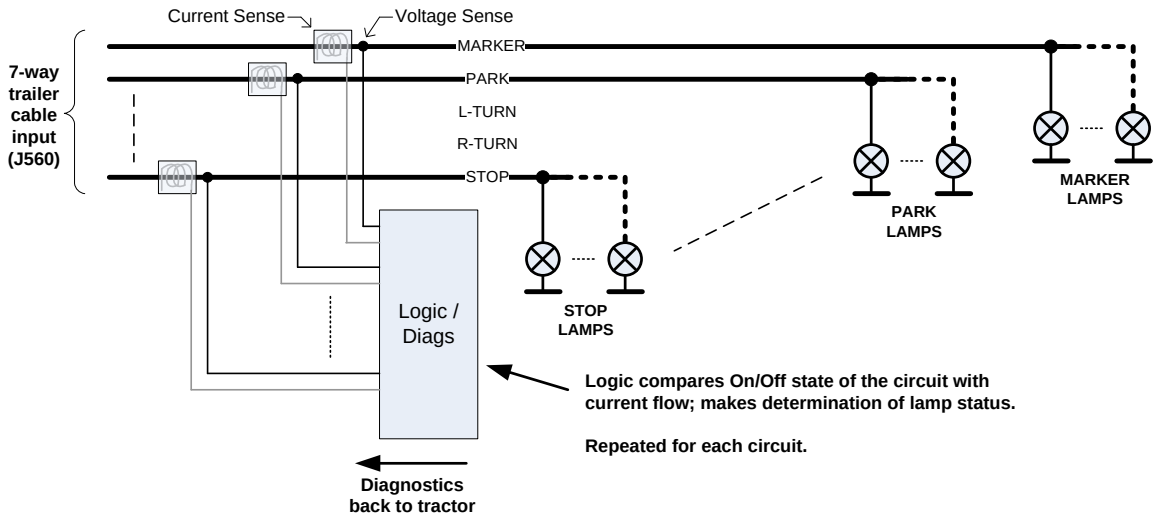

Figure 23. Illustration. Trailer Cabling.

Benefits of this scenario:

- Simple, cost-effective, low-tech
- Does not add a layer of complexity which could add failure modes
- Backwards-compatible with older tractors since J560 inputs are still used to directly drive lamps
- Good synchronization, since trailer lamps are still directly driven by 7-way SAE J560 signals
- Easily retrofitted to existing trailers

Drawbacks of this scenario:

- Difficult with low current levels of LED lighting
- Difficult packaging / bulky
- Not "forward compatible" (not easily adapted to new trailer lighting schemes)
- Does not account for poor J560 connection (unless databus redundancy used)

(4) Tractor Monitors all Circuits

In this last scenario, the trailer lamps are all monitored for proper operation before they leave the source – the tractor. The same lighting control which controls and monitors the *tractor* lighting is used to control and monitor the *trailer* lighting.

Benefits of this scenario:

- Cost is added to the tractor, not the trailer
- No synchronization issues

Drawbacks of this scenario:

- Difficult to accomplish when do not know the total trailer lighting load(s)

- Difficult to distinguish between case of no trailer connected, and faulty trailer connected
- Not compatible with multiple trailers (especially in case of over-current)
- In the case of multiple trailers, also will not pinpoint which trailer has the problem
- Not "forward compatible" (not easily adapted to new trailer lighting schemes)

Trailer Door (or contents) Monitoring

(1) Door Position Sensing

Simple monitoring of the open/closed status of the doors is perhaps the easiest way to protect the trailer contents.

Benefits include low cost, easy concealment of the sensors (especially if built-in to the doors), and a low power consumption when armed.

Drawbacks include the assumption that the door(s) will be the only means of entry, and the difficulty in protecting many styles of trailers (e.g., curtain-sided trailers, flatbed trailers, etc.)

(2) Active or Passive Object Detection

Active or Passive Infrared motion detection could be used to detect the un-authorized presence of persons inside a trailer or in the area of the cargo secured to a flatbed trailer.

The benefit is easy discrimination between cargo and warm-bodied humans; the drawbacks are numerous, including the existence of many 'dead zones' created by cargo, behind which someone could hide, as well as the need for fairly consistent temperatures across all of the cargo in order to discriminate temperature differences.

(3) RFID Tags / Content Monitoring

Instead of trying to determine the entry or presence of unauthorized persons, securing the cargo could also take the form of keeping track of loading and unloading of the cargo, using for example Radio Frequency Identification (RFID) tags embedded in the cargo.

Benefits include applicability to a wide variety of trailer types, plus the added value of knowing at any instant what cargo is aboard (electronic manifests).

Drawbacks include the possibility that the contents are still subject to vandalism (as opposed to theft), as well as the possibility that it could be possible to steal the contents but leave the RFID tags behind.

Description of Chosen Solution

The goal of this report was to explore several different options for trailer lighting and content monitoring, and select one option for demonstration. The selection is based on the benefits and drawbacks of each option, but also on the feasibility of demonstrating the concept on a limited budget and timeframe. Once the concept is demonstrated, it is a much simpler task to fine-tune and optimize the total package.

The solution chosen for the Trusted Truck® II demonstration is comprised of the following:

- Tractor <> Trailer Communication: Bluetooth™ Wireless
- Trailer Lighting System Monitoring: Local Current / Voltage Monitoring

- Trailer Door / Content Monitoring: Door Position Sensing

A general purpose Input/Output (I/O) box, using a CAN communication bus, is used to gather the inputs, make logic determination, and send the results to the tractor over a CAN <> Bluetooth™ wireless link.
A backup battery is used to power the system when the trailer is either not connected to the tractor, or when connected but the tractor ignition switch is off.

At the tractor, the CAN message is decoded and distributed to information displays used for notifying the operator of the status of the trailer systems.

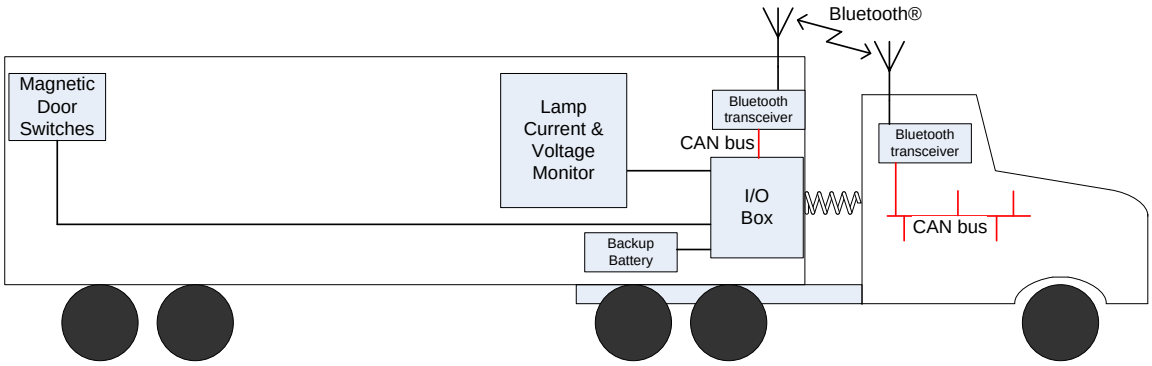

Figure 24. Illustration. Trailer Architecture.

Conclusions / Recommendations

There are many options for commercialization of a system which monitors the contents and lighting of the trailer system, but the largest barrier is the need to handle the large mixed fleet of existing tractors and trailers in the field. A 20-year-old trailer is expected to function with a brand-new tractor, and vice-versa. This limits the implementation possibilities in a classical "chicken and egg" situation.

The best way to overcome this is to make any new trailer systems backwards-compatible with older tractors, yet build in new features which can be taken advantage of with the systems available on newer tractors. An example is the 2001 phase-in of the PLC (Power Line Carrier) system used for transmitting ABS data from trailer to tractor.

Another way to overcome the problem is to make sure any solution can be easily retrofitted to the existing fleet of tractors and trailers. In this way it is easier to achieve a critical mass of systems in the field that will add to the benefits of more wide-spread adoption of the systems.

Although for "demonstration purposes" one can ignore such barriers when simply trying to prove a concept, in this case we felt it necessary to be as realistic as possible when considering options for the demonstration.

If both the tractor and trailer were being re-designed from the ground up, the possibilities for monitoring the systems on the trailer are made much easier. A high-speed databus extension of the tractor's J1939 databus – as is done in Europe – would be the logical first step, as would the building in of extra (non-dedicated) circuits between the tractor and trailer.

Appendix E – ECU Hardware Selection Study for Tractor/Trailer Communication

The investigation of the hardware to solve the trailer lamp status and door security was limited to finding off the shelf components to detect current drawn by the individual lamp circuits as well as the on/off status, and transmit the information wirelessly to the cab where the data could be integrated with the Trusted Truck® message for transmission. The requirements driving the selection are:

1. Ruggedized and rated for use in automotive/heavy duty trucking applications
2. Able to detect the status of the following lamp circuits:
    a. Park Lamp circuit
    b. Stop lamp circuit
    c. Marker lamp circuit
    d. Right turn circuit
    e. Left turn circuit
3. In addition, it was decided to include the status of the power supply for the in-trailer components. A door status circuit is also used to identify the status of the trailer door.

The ECU that is responsible for monitoring the various circuits must be able to transmit an SAE J-1939 message that will be wirelessly transmitted to the cab. As is described elsewhere, Bluetooth™ was selected as the appropriate medium.

The selected unit must provide a minimum of five analog inputs that will be used to detect the current drawn by each lamp circuit. It must also provide the ability to inspect the on/off status of each circuit suggesting a minimum of five "switch-to-battery" digital inputs. The door switch, as proposed will switch and sixth digital input to battery when the door is unsecured. Finally, one additional analog input should be available to determine the health of the trailer power supply. The power supply should be battery backed, and if possible, charged by a roof-mounted solar panel. The proposed circuit is pictured in Figure 25 below.

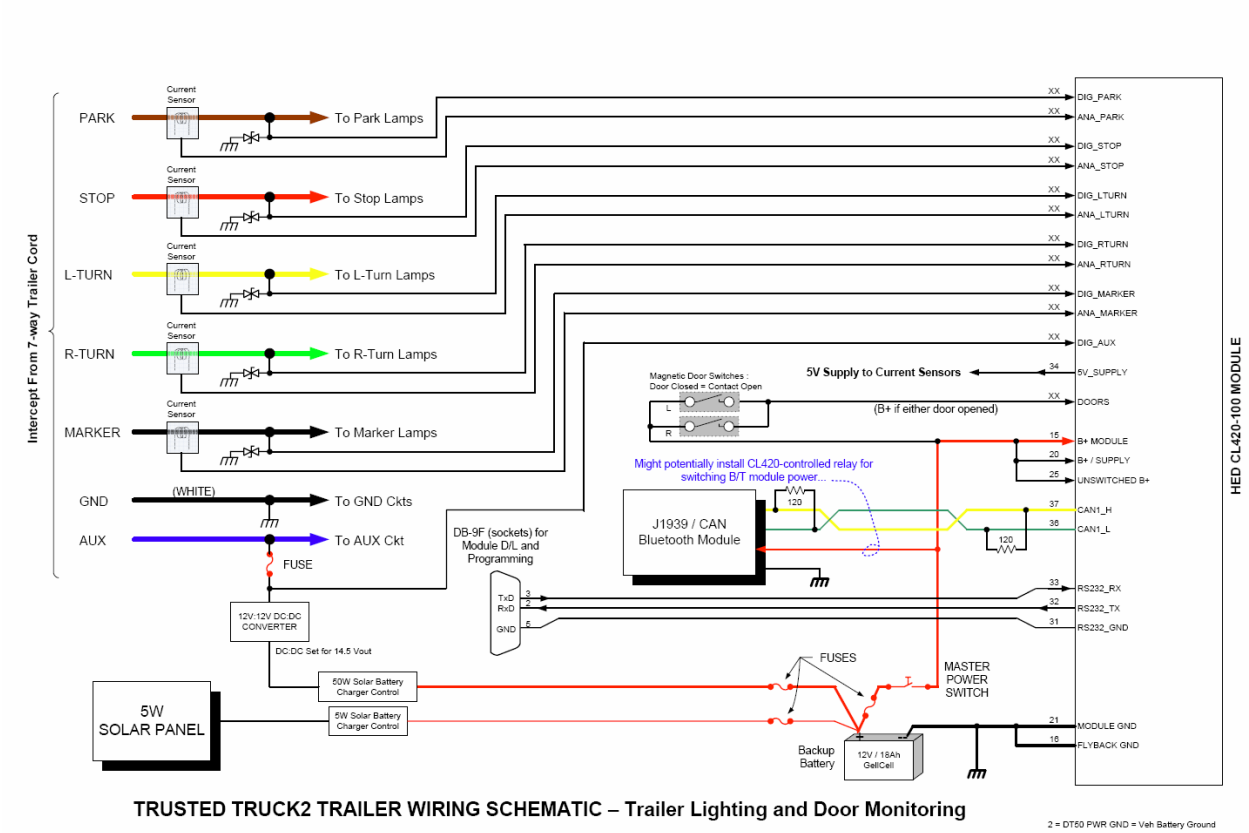

Figure 25. Diagram. Proposed Trailer Circuit Schematic Diagram.

An electronic control module manufactured by Hydro Electronic Devices, Inc. was identified as meeting all the requirements stated above. The unit is completely compliant with all industry standards regarding automotive use, has the required input capability and will produce the requisite J-1939 message (www.hedonline.com). Similarly, a suitable CAN to Bluetooth™ device manufactured by RM Michaelides (www.rmcan.com) was identified that supports the necessary functionality to relay the J-1939 message to the tractor communications bus in the cab.

The sensors proposed to detect the current associated with each lamp circuit can be solved by using the Tamura S22P006S05 Hall-effect current sensor. In order to ensure good resolution, the two pass option will be used. Table 1 shows the experimentally achieved output voltage based on various sensed current.

Experimental results with Tamura S22P006S05, tested 30OCT2008

(A) With Ip = one pass			Observed	(B) With Ip = two pass			Observed
Current	Voltage	mV	Vdrop:	Current	Voltage	mV	Vdrop:
0.0	2.50	2500		0.0	2.51	2510	
0.5	2.56	2560		0.5	2.62	2620	
1.0	2.61	2610	0.2 mV	1.0	2.72	2720	1.9 mV
1.5	2.66	2660		1.5	2.83	2830	
2.0	2.71	2710	0.5 mV	2.0	2.93	2930	3.8 mV
2.5	2.77	2770		2.5	3.03	3030	
3.0	2.82	2820	0.7 mV	3.0	3.14	3140	5.7 mV
3.5	2.87	2870		3.5	3.24	3240	
4.0	2.92	2920	1.0 mV	4.0	3.35	3350	7.7 mV
4.5	2.98	2980		4.5	3.45	3450	
5.0	3.03	3030	1.2 mV	5.0	3.56	3560	9.6 mV
5.5	3.08	3080		5.5	3.66	3660	
6.0	3.13	3130	1.5 mV	6.0	3.77	3770	11.6 mV
6.5	3.19	3190		6.5	3.87	3870	
7.0	3.24	3240	1.7 mV	7.0	3.97	3970	13.5 mV
7.5	3.29	3290		7.5	4.08	4080	14.5 mV

Table 12: Current Sensor Experimental Response

The J-1939 message specified uses an enumeration as defined in table x.y below.

0 Not Faulted

1 Over-current detected

2 Under-current detected

3 Unknown.

The TGW module that receives the message sets response to “unknown” until the first message is received from the trailer. The sensing algorithms effectively latch a failure state until the circuit is detected to be functioning correctly through all operation modes.