U.S. Department
of Transportation

The Development of an Independent Locking Securement System for Mobility Aids on Public Transportation Vehicles

December 1992

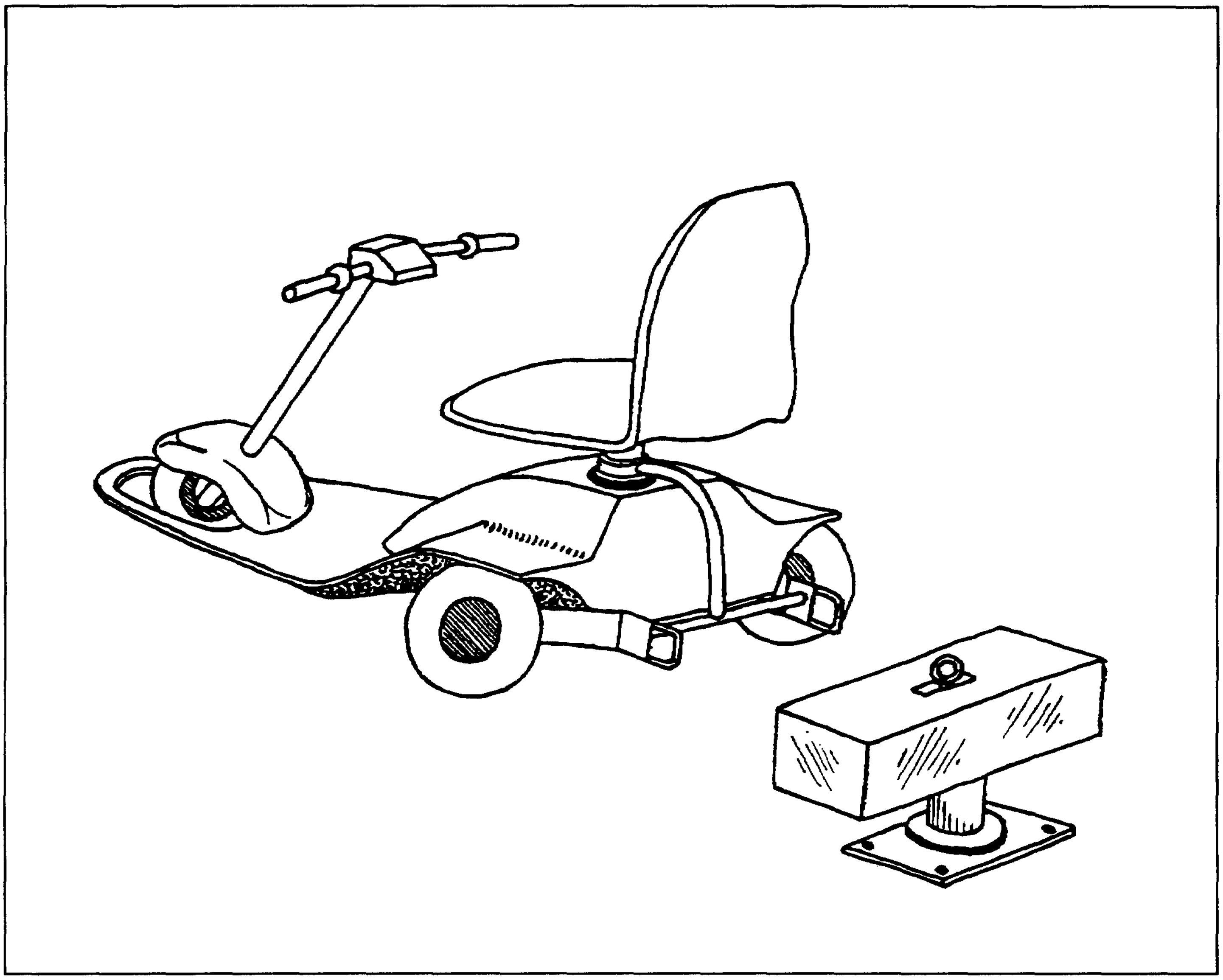

FEDERAL TRANSIT ADMINISTRATION

The Development of an Independent Locking Securement System for Mobility Aids on Public Transportation Vehicles

Final Report
December 1992

Prepared by

Katharine M. Hunter-Zaworski, Joseph R.
Zaworski, and Garrett Clarke
Transportation Research Institute
Oregon State University
Corvallis, Oregon 97331

Prepared for

University Research and Training Program
Office of Technical Assistance
Federal Transit Administration
Washington, DC 20590

Distributed in Cooperation with

Technology Sharing Program
U.S. Department of Transportation
Washington, D.C. 20590

DOT-T-93-08

METRIC / ENGLISH CONVERSION FACTORS

ENGLISH TO METRIC

LENGTH (APPROXIMATE)

1 inch (in) = 2.5 centimeters (cm)
1 foot (ft) = 30 centimeters (cm)
1 yard (yd) = 0.9 meter (m)
1 mile (mi) = 1.6 kilometers (km)

AREA (APPROXIMATE)

1 square inch (sq in, in^2) = 6.5 square centimeters (cm^2)
1 square foot (sq ft, ft^2) = 0.09 square meter (m^2)
1 square yard (sq yd, yd^2) = 0.8 square meter (m^2)
1 square mile (sq mi, mi^2) = 2.6 square kilometers (km^2)
1 acre = 0.4 hectares (he) = 4,000 square meters (m^2)

MASS - WEIGHT (APPROXIMATE)

1 ounce (oz) = 28 grams (gr)
1 pound (lb) = .45 kilogram (kg)
1 short ton = 2,000 pounds (lb) = 0.9 tonne (t)

VOLUME (APPROXIMATE)

1 teaspoon (tsp) = 5 milliliters (ml)
1 tablespoon (tbsp) = 15 milliliters (ml)
1 fluid ounce (fl oz) = 30 milliliters (ml)
1 cup (c) = 0.24 liter (l)
1 pint (pt) = 0.47 liter (l)
1 quart (qt) = 0.96 liter (l)
1 gallon (gal) = 3.8 liters (l)
1 cubic foot (cu ft, ft^3) = 0.03 cubic meter (m^3)
1 cubic yard (cu yd, yd^3) = 0.76 cubic meter (m^3)

TEMPERATURE (EXACT)

$[(x - 32)(5/9)]$ °F = y °C

METRIC TO ENGLISH

LENGTH (APPROXIMATE)

1 millimeter (mm) = 0.04 inch (in)
1 centimeter (cm) = 0.4 inch (in)
1 meter (m) = 3.3 feet (ft)
1 meter (m) = 1.1 yards (yd)
1 kilometer (km) = 0.6 mile (mi)

AREA (APPROXIMATE)

1 square centimeter (cm^2) = 0.16 square inch (sq in, in^2)
1 square meter (m^2) = 1.2 square yards (sq yd, yd^2)
1 square kilometer (km^2) = 0.4 square mile (sq mi, mi^2)
1 hectare (he) = 10,000 square meters (m^2) = 2.5 acres

MASS - WEIGHT (APPROXIMATE)

1 gram (gr) = 0.036 ounce (oz)
1 kilogram (kg) = 2.2 pounds (lb)
1 tonne (t) = 1,000 kilograms (kg) = 1.1 short tons

VOLUME (APPROXIMATE)

1 milliliter (ml) = 0.03 fluid ounce (fl oz)
1 liter (l) = 2.1 pints (pt)
1 liter (l) = 1.06 quarts (qt)
1 liter (l) = 0.26 gallon (gal)
1 cubic meter (m^3) = 36 cubic feet (cu ft, ft^3)
1 cubic meter (m^3) = 1.3 cubic yards (cu yd, yd^3)

TEMPERATURE (EXACT)

$[(9/5)y + 32]$ °C = x °F

QUICK INCH-CENTIMETER LENGTH CONVERSION

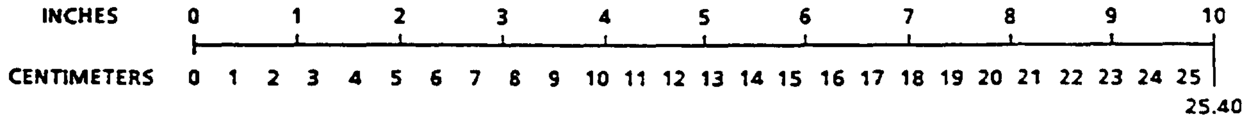

QUICK FAHRENHEIT-CELCIUS TEMPERATURE CONVERSION

°F	-40°	-22°	-4°	14°	32°	50°	68°	86°	104°	122°	140°	158°	176°	194°	212°
°C	-40°	-30°	-20°	-10°	0°	10°	20°	30°	40°	50°	60°	70°	80°	90°	100°

For more exact and/or other conversion factors, see NBS Miscellaneous Publication 286, Units of Weights and Measures. Price $2.50. SD Catalog No. C13 10 286.

TABLE OF CONTENTS

Page

ACKNOWLEDGEMENTS 1

CHAPTER 1 — INTRODUCTION 3
- Introduction 3
- Report Organization 3
- Background 3
- Vocabulary 4
- Problem Statement 4
- Research Goals 5
- Design Objectives 5
- Project Advisory Committee 6

CHAPTER 2 — DESCRIPTION OF THE DESIGN OF THE OREGON STATE UNIVERSITY SECUREMENT SYSTEM 9
- Introduction 9
- Design Concept 9
- Capture Mechanism 9
- Interface Unit 12
- Securement System Operation 12
- Other Features 14
- Summary 14

CHAPTER 3 — HUMAN FACTORS TESTING 15
- Introduction 15
- The Need for Human Factors Tests 15
- Objectives of the Human Factors Tests 15
- Test Methodology 18
- Test Setup 18
- Test Facilities 19
- Protocol 21
- Results 22
- Summary of Human Factors Testing 25

CHAPTER 4 — THE ILS SYSTEM ENGINEERING TESTS 27
- Introduction 27
- Normal Operations Testing 28
- Quasi-Static Testing 32

Side-Slip Testing 33
Sled Testing 37
Latch Mechanism Impact Loading 42
Conclusions 44
CHAPTER 5 — SUMMARY 45
Introduction 45
Volume 1 Conclusions 45
Volume 1 Recommendations 45
Volume 2 Conclusions 45
Volume 2 Recommendations 46
Future Directions 46
CHAPTER 6 — REFERENCES 47

APPENDICES

A HUMAN FACTORS TESTS PROTOCOL
B HUMAN FACTORS TEST QUESTIONNAIRE
C ENGINEERING SLED TESTS RESULTS
D SIDE LOAD TESTING
E ADVISORY COMMITTEE

THE DEVELOPMENT OF AN INDEPENDENT LOCKING SECUREMENT SYSTEM OF MOBILITY AIDS ON PUBLIC TRANSPORTATION VEHICLES

ACKNOWLEDGEMENTS

The Independent Locking Securement (ILS) System Project was made possible by the sponsorship and support of the US Department of Transportation, Federal Transit Administration, University Research and Training Program, and National Easter Seal's Project ACTION. In particular, the ILS System Project team thanks Mr. George Izumi, and Ms. Marina Drancsak of the U.S. Department of Transportation, Federal Transit Administration, University Research and Training Program, for their encouragement, direction, guidance and support. The project team thanks Mr. David Capozzi and Mr. Jim Flemming of the National Easter Seal's Project ACTION, for their support, direction and guidance.

The ILS System Project would not have been successful without the strong support of the Advisory Committee. The Advisory Committee was made up persons with disabilities who regularly ride public transportation as well as representatives of a number of transit agencies in the Pacific Northwest, and state and local government officials. Appendix E lists the members and addresses of the advisory committee. The project team consisting of David Ullman, Joseph Zaworski, Derald Herling, Garrett Clark, Wahib Thabet and K.M. Hunter-Zaworski, would like to thank a number of people who gave special support to the project.

The project team is thankful for the support for the project given by Drs. Reistad and Huber, Chairmen of the Department of Mechanical Engineering and Civil Engineering, respectively at Oregon State University. We also thank Dean Owen and Associate Dean Schroeder, of the College of Engineering for their patience and support of the project. The project team also thanks Joel Dille and Don Freemen, mechanical engineering undergraduate students, for their dedication and enthusiasm in helping to refine the first interfaces for manual wheelchairs.

The project team is very grateful for the strong support, mentoring, guidance and direction given by Mr. Bill Henderson, of Snohomish Senior Services.

The project team would like to give a very special acknowledgement to Patricia Nielsen, Accessible Transit Planner with TRI-MET in Portland, Oregon, and the members of her Citizens Advisory Committee for Accessible Transit. We also thank Jan Campbell of the city of Portland for assistance in organizing advisory committee meetings. Their support and guidance were instrumental in the direction of the project.

The project team would also like to give a very special thank you to Micki Kaplan, Transit Planner, Frank Whisenhunt and Ron Berkshire, maintenance supervisors at Lane Transit District (LTD) in Eugene. Their support was invaluable for the human factors testing. We thank George Brown of the maintenance department for driving the bus while we were testing the prototype. We have a very special thank you to

Dave Kleger of the LTD Citizens Advisory Committee for his willingness to be one of the first test subject in the on-road tests of the securement system.

The project team also thanks Dr. Larry Schneider and his staff of the University of Michigan Transportation Research Institute for their assistance in the sled tests of the prototypes.

The project team thanks the following persons who volunteered to help with the human factors testing. Cindy Jenkins, OSU Business Office, Wayne Lowell, OSU Controllers Office, Marshall Smith, OSU Student, and Mark Mitchell, OSU Student.

We would also like to thank Bob McCowan and Dave Norstrom from Battelle for their contribution to the project, as well as Bruce Chown, and Al Little from B.C. Transit.

CHAPTER 1 - INTRODUCTION

Introduction

The Independent Locking Securement System Project (ILS System Project) is a successful attempt to respond to the transportation community's need for a "universal" securement/restraint system that will accommodate most wheeled mobility aids, including three-wheeled scooters, in common use on public transportation systems. The research project was designed to assist transit agencies as well as manufacturers in providing access on public transit vehicles to persons with disabilities and to meet the requirements of the Americans with Disabilities Act (ADA). The project focused on mobility aid securement problem analysis, design and construction of several securement system prototypes, and extensive testing of both the operational and engineering aspects of the securement system.

The primary objective of the ILS System Project was to design, build and test a wheeled mobility aid securement system that would operate with all mobility aids in "common use" on fixed route transit vehicles. The major requirements for the system were to: maximize mobility aid user independence, minimize transit vehicle operator involvement, minimize securement and release time, and satisfy all the proposed securement standards and guidelines.

Report Organization

The ILS System Project has been documented in two reports. Volume 1 report details the application of the Quality Functional Deployment Method in developing design specifications. Volume 1 also includes a synthesis of the state of the art prior to the development of the Securement System. Volume 1 provides an excellent guide on the application of the QFD, and also details the technical specifications for a securement system. Volume 2 describes the design that was developed by the project, and in addition it also documents the extensive engineering testing program that was undertaken as part of the project. The report also documents additional engineering research that was done on the reaction of mobility aids to side loads.

Background

Providing access on public transit vehicles for persons with disabilities is a well established goal of all public transit agencies. People with disabilities use a variety of mobility aids and other assistive devices and rely on public transportation for their personal mobility. However, the diversity and styles of wheeled mobility aids create significant problems for public transit agencies when it comes to securing them on transit vehicles. This problem was identified by Project ACTION's reconnaissance survey as well as by a large number of transit agencies. The need for a universal securement system design was also identified as a national research priority. Before going further into the problem, it is important to have a well defined vocabulary. Some of the key words and phrases used in this report are as follows.

Vocabulary

A Person with a Disability: A person with a disability is defined in part by the U.S. Department of Transportation as, "any individual who, by reason of illness, injury, age, congenital malfunction, or other permanent or temporary incapacity or disability is unable, without special facilities, or special planning or design, to utilize mass transportation facilities and services as effectively as persons who are not so affected."

Mobility Aid: Mobility aid refers to a chair mounted on wheels to facilitate the mobility of persons with disabilities in a seated position. Some common wheeled mobility aids are: three-wheeled scooters, power base wheelchair, powered wheelchairs, light weight sport style wheelchairs, and manual wheelchairs.

Capture System: The capture system refers to the apparatus installed on transit vehicles for the purpose of limiting motion of an occupied wheeled mobility aid in a specific location in the vehicle.

Interface Unit: This refers to the apparatus attached to the back of the mobility aid that provides attachment points for the capture system.

Securement System: The securement system refers to both the capture mechanism and interface unit functioning as one unit.

Restraint System: The purpose of the restraint system is to hold a passenger in a seated position during transportation by transit vehicles. (Note the distinction: a securement system is for a mobility aid and a restraint system is for a person.)

Problem Statement

The problem of securing mobility aids stems from two sources. First is the need to adequately secure the mobility aids in transit vehicles. Currently a number of different types of systems are available to accomplish this; most making use of three or four belts that hook from the mobility aid to the floor of the vehicle. These systems were derived from hardware developed for the securement of cargo on aircraft. They require the driver or attendant to hook each end of each belt and tighten each to ensure that the mobility aid will not shift during normal operations and not break loose during accident conditions. Difficulties with these systems arise in securing scooter and powerbase type mobility aids as there are no acceptable places to attach the belts.

The second source for the problem of securing mobility aids is the American with Disabilities Act (ADA) requirement that all fixed route transit vehicles be accessible. The ADA definition of accessibility requires that mobility aids "in common use" must be able to both get on to the vehicle and be secured once on board. Current efforts at securing mobility aids on fixed route vehicles are either a derivation of the belt systems, use of wheel clamps, or a combination of belts and clamps. This report will describe implicitly some of the problems with the existing securement systems.

Research Goals

The project undertaken at Oregon State University had two primary goals: to fully understand the problem and to design, build and test a prototype system based on this understanding. These two requirements needed an organized and unbiased party to develop the information needed to design new systems and develop new ideas. Additionally, an organized method, such as the Quality Functional Deployment Method (QFD) allows others to critique it, build on it and modify it as the problem matures and evolves in time. In meeting these requirements, the researchers involved in this project had no ties to any of the manufacturers, users, government organizations or standards committees and thus were unbiased in their efforts. Furthermore, the (QFD) method described in this report is organized, repeatable and modifiable by other researchers. Finally, and most importantly, the method resulted in the generation and organization of information that formed the foundation for development of concepts and a prototype securement system.

A number of transit agencies have devised and used various securement systems as they attempted to provide service to people with disabilities. In the absence of federal design requirements, it is not surprising that these design efforts by people in various locations did not produce a universally accepted system. As more and more people with disabilities ride public transit, and as the types and styles of mobility aids they use continue to proliferate, individual public transit agencies are now faced with the problem that is beyond their ability to solve. Securement systems that were adequate in the past are no longer suitable for the newer mobility aids. The needs of passengers and transit agencies, and the new ADA standards for securement of mobility aid passengers, mandated a fresh look at the problem. It became clear that a universal system had to be designed that would meet the requirements of all customers.

Design Objectives

The major design objectives of the Securement System were as follows:

1. Accommodate a large variety of mobility devices, such as sports style manual wheelchairs and "scooter" style electric wheelchairs,
2. Safely secure the mobility devices and provide restraint for the passenger,
3. Satisfy the USDOT/FTA American with Disabilities Act (ADA) regulations and guidelines, as well as the proposed Canadian Standards Association (CSA) regulations for Mobility Aids Securement and Occupant Restraint (MASOR)
4. Reduce securement time and operator involvement, and provide as much independent operation by wheeled mobility aid occupant as possible,
5. Reduce time for release of mobility device from the securement system, to reduce cycle time, and permit rapid evacuation if necessary,

6. Applicable to both fixed route and demand responsive transit vehicles, and satisfy the technical requirements of the different vehicles operating in urban, suburban and rural settings,
7. Operate in all climatic conditions,
8. Prevent relative movement between mobility aid and vehicle in regular and emergency operation,
9. Maximize occupant protection,
10. Minimize operator training,
11. Operate as a continuum between the transportation vehicle-mobility aid and occupant.

Project Advisory Committee

An advisory committee was formed to assist with the project. An Advisory Committee had been formed in 1987 for the Human Factors in Public Transportation Safety Project undertaken by OSU/TRI for the USDOT/FTA. Both the new and previous advisory committees had many of the same members. The project advisory committee was made up of persons with disabilities who regularly use transit, and many also represent organizations associated with disabilities. Other members of the advisory committee included: accessible transit planners, transit vehicle operators, maintenance personnel, transit managers, and state government representatives. The advisory committee had representatives from Lane Transit District (LTD) in Eugene, Oregon; TRI-MET in Portland, Oregon; METRO in Seattle, Washington; and B.C. Transit in Vancouver, B.C. Appendix E includes a list of members of the Advisory Committee. A number of other people provided direction for the project but were unable to attend the Advisory Committee Meetings and this includes: Bill Henderson, Snohomish Senior Services; Sue Stewart and Catherine Rice, Seattle METRO; Park Woodworth, TRI-MET; Micki Kaplan, LTD; Al Little, B.C. Transit; and David Capozzi, NESS Project ACTION. Table 1 shows the structure of the advisory committee.

Table 1 Structure of the Advisory Committee

Transit Agencies: Lane Transit District (LTD), Eugene, Oregon TRI-MET, Portland, Oregon METRO, Seattle, Washington B.C. Transit, Vancouver, B.C., Canada
Accessible Service Managers: Micki Kaplan, LTD Patricia Neilsen, TRI-MET Park Woodworth, TRI-MET Robert Carroll, METRO Roxanne Sumners, Corvallis Transit Bruce Chown, B.C. Transit
Vehicle Operators, LTD, TRI-MET, and B.C. Transit
Maintenance Personnel, LTD, TRI-MET, and B.C. Transit
Accessible Service Committee Members, LTD, TRI-MET, and B.C. Transit
State Government: Paul Gamble, Washington State Department of Transportation Steve Fosdick, Oregon Department of Transportation Dinah Van Der Hyde, Oregon Department of Transportation
Consumer Groups: Paralyzed Veterans of America, Portland and Eugene Chapters
Industry Representatives: Philip Gebhart
Other Advisors: Jim Flemming, Project ACTION George Izumi, USDOT/FTA Marina Drancsak, USDOT/FTA David Capozzi, Access Board Dave Norstrom, Battelle Memorial Institute Robert McCowan, Battelle Memorial Institute Bill Henderson, Snohomish Senior Services Catharine Rice, METRO Sue Stewart, METRO Al Little, B.C. Transit
Oregon Architectural Barriers Committee Members

CHAPTER 2 — DESCRIPTION OF THE DESIGN OF THE INDEPENDENT LOCKING SECUREMENT SYSTEM

Introduction

This chapter discusses the Independent Locking Securement (ILS) System concept, which is made up of two parts; the capture mechanism and the interfaces. A brief description of the operation of the securement system is also included in the chapter.

Design Concept

The Securement System concept is made up of two parts. The capture mechanism which is attached to the transit vehicle and the interface unit which is attached to the mobility aid. The securement system concept is designed to secure a mobility aid in the forward facing position, this is consistent with the policy adopted by the international standards organization. The securement system has been designed to satisfy the proposed international, Canadian, and United States standards for the securement of mobility aids and the restraint of their occupants. The interface unit has been designed to meet the proposed standards. However, many of the mobility aids, as they are presently built, do not have the structural integrity to withstand the accelerations and resulting force loadings specified in the proposed standards. The interface units do not compensate for deficiencies in the structural integrity of the mobility aids. The capture mechanism can be fastened directly to the floor structure of the chassis of the transit vehicle.

Capture Mechanism

The capture mechanism is a box like structure that is fastened to the floor of the transit vehicle, and it holds the D rings of interface unit which are attached to the mobility aid. The capture mechanism prevents the mobility aid from moving forward, backwards, sidewards, or up and down. The capture mechanism also controls rotation of the mobility aid about the longitudinal, vertical and horizontal axes. In order to limit these translations, rotations, and control forces and moments (torques), the capture mechanism must be multi-faceted. The capture mechanism uses two latches, derived from car door latches. These latches are mounted 14.0 inches apart on a sliding bar that sits on a rotating pedestal. The 14.0 inch dimension is required to accommodate the moments or torques that result from securing a power base wheelchair and occupant. The easy rotation and translation of the capture mechanism compensates for misalignment between the mobility aid and the center line of the securement system when a person backs into the securement system. Built in stops limit the rotation of the capture mechanism to ± 10 degrees. The human factors tests indicated that 20 degrees of rotation fully accommodates any rotational misalignment. Initially, 4 inches of translation were built into the capture mechanism, but after the human factors tests it was determined that only 2 inches of translation were required. The subsequent design permits only 2 inches of translation.

The height of 7 inches above the floor of the transit vehicle of the latches permits the line of action of the holding force to go below the center of gravity of most mobility aids. This is essential to keep the front wheels from lifting during deceleration. A modest amount of slack accommodates variations in tire inflation.

Electrical switches placed in the mobility aid station and at the operator's cockpit activate a solenoid to release the latches. A mechanical release is also built into the system. The mechanical release is designed to be used when there is an electrical system failure or a failure of the solenoid. A disable mechanism is also provided so that when the transit vehicle is moving, the disable system inactivates the electrical system so that the solenoid can not be activated to release the latches.

A set of micro switches was installed on each latch. These switches activate lights at the securement station and at the driver's cockpit to indicate through a light that the mobility aid is correctly latched.

An energy management system was incorporated into the capture mechanism to attenuate energy in severe driving or accident conditions. The energy is absorbed in hard rubber shock absorbers. These shock absorbers also limit the amount of movement of the mobility aid to 0.75 inches in severe accident conditions.

To unlatch the capture mechanism, the passenger pushes a switch to activate the solenoid. The time that the solenoid holds the latches open can be adjusted from 1 to 60 seconds. This permits the mobility aid user to drive out of the securement station.

Several prototypes were built. The first prototype (Beta I) was used for the human factors tests to determine how much translation and rotation was required. The Beta I prototype was then placed on the Instron machine for static loading tests. Two Beta II units were built and these were the same in design as the Beta I except for the following:

- the drawings were revised to make fabrication and assembly easier and less costly;
- the translation was reduced to ± 1.0 inch based upon field tests in the lab and on the bus;
- rotation stops were installed to limit rotation to ± 10 degrees;
- a manual emergency release device was incorporated in the top of the unit;
- the latch and keeper were held to the plate by machined pins rather than shoulder bolts as in the Beta I unit;
- the latch part was increased 1/8 inch in height.

Figure 1 illustrates the capture mechanism.

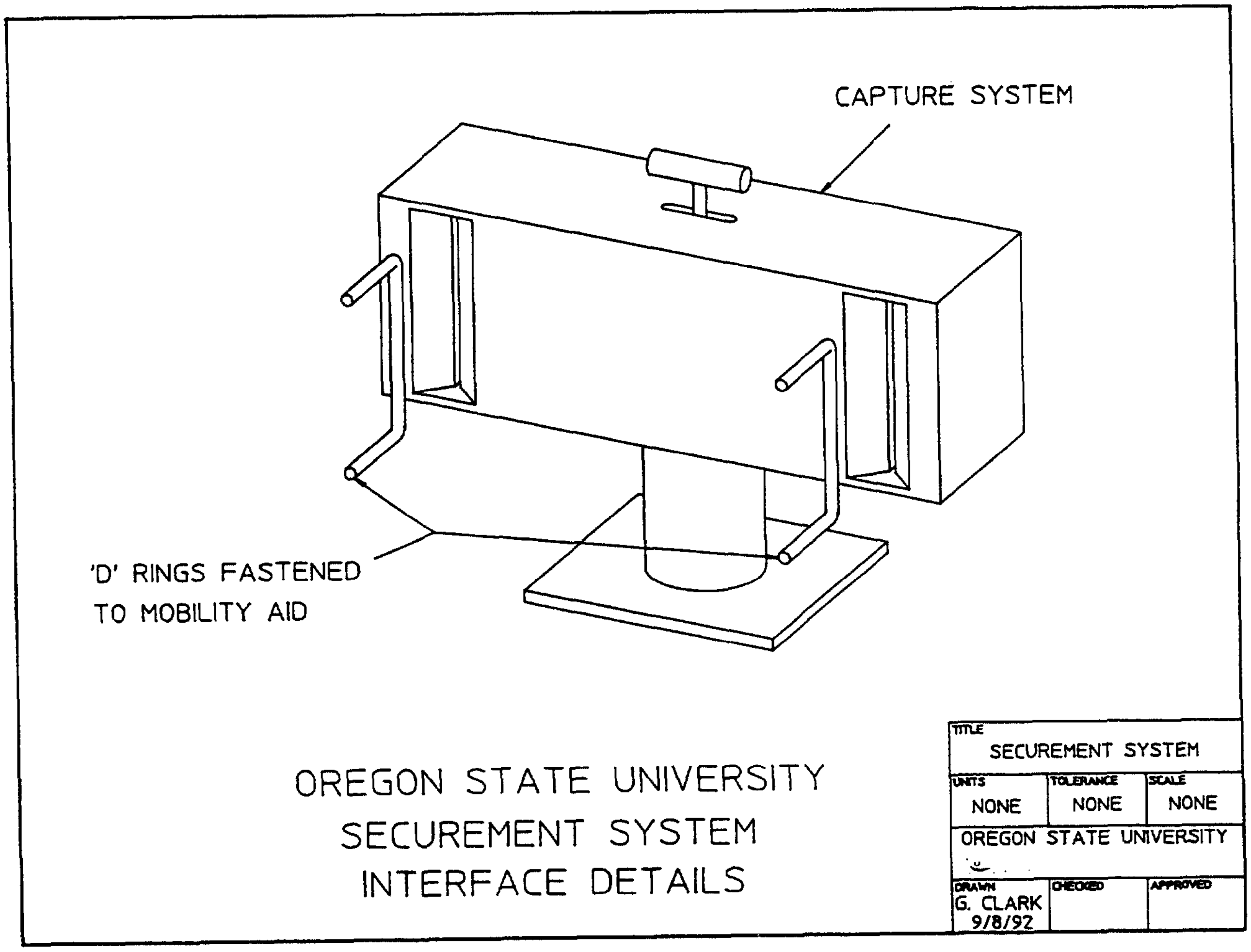

Figure 1. The Capture Mechanism

Interface Unit

The hardware that attaches to the back of the mobility aid consists of double D-rings. The D-rings are 4 inches high in the vertical plane, 3/8 inches in diameter and they are placed 14.0 inches apart. The D-rings, constructed out of mild carbon steel, are designed to deform under high load conditions. This deformation absorbs some of the energy.

The attachment of the D-ring assemblies is dependent on the design of the mobility aid. All interface units attach to the mobility aid at the main structural points. The interface unit for the manual wheelchair is made up of two parts. A bracket that is fastened to the main axle area of the manual wheelchair. Inserted into the bracket is a rod consisting of the D-ring assembly. The total weight for the two rods and two brackets is three and a half pounds. The brackets that are permanently attached to the wheelchair only weigh one and a half pounds. The manual wheelchair bracket is designed to use any preexisting holes in the wheelchair frame that are available at the axle plate. If pre-drilled holes are not available, the interface unit bracket clasps fit around the main frame at the axle plate. The interface units do not project outside the envelope of the mobility aid and they still permit a manual or sport wheelchair to be collapsed or a wheelchair user to jump curbs. The additional weight of the interface unit has a negligible effect on the center of gravity of the mobility aid.

The interface bracket that is attached to the back of the scooter consists of a ring that helps to stabilize the seat post and two brackets that fit onto the back axle. The D-rings are attached to an inverted T-structure. The top of the inverted T forms a ring that fits over the seat post and the bottom of the inverted T holds the two D-rings 14 inches apart. Figures 2 and 3 illustrate these interface units.

Securement System Operation

To use the securement system, the users would back onto the transit vehicle lift, which is the standard operating procedure for most transit operations. The human factors tests indicated that is was not necessary for mobility aid users to turn their heads to use the securement system. Basically, to use the capture mechanism the mobility aid user simply backs in and is latched. A green light beside the release switch indicates to the mobility aid occupant that the mobility aid has been correctly secured. If the mobility aid has not been correctly secured, the mobility aid passenger simply presses a low resistance switch to release the securement system and tries again. A duplicate light in the drivers cockpit indicates to the vehicle operator that the mobility aid has been latched in.

To release the securement system, the mobility aid user simply presses a switch and drives right out. If the mobility aid user is unable to press the switch, the operator can release the securement system from the operators' cockpit. With this system, individuals are able to secure their own mobility aids with out any intervention by the vehicle operator.

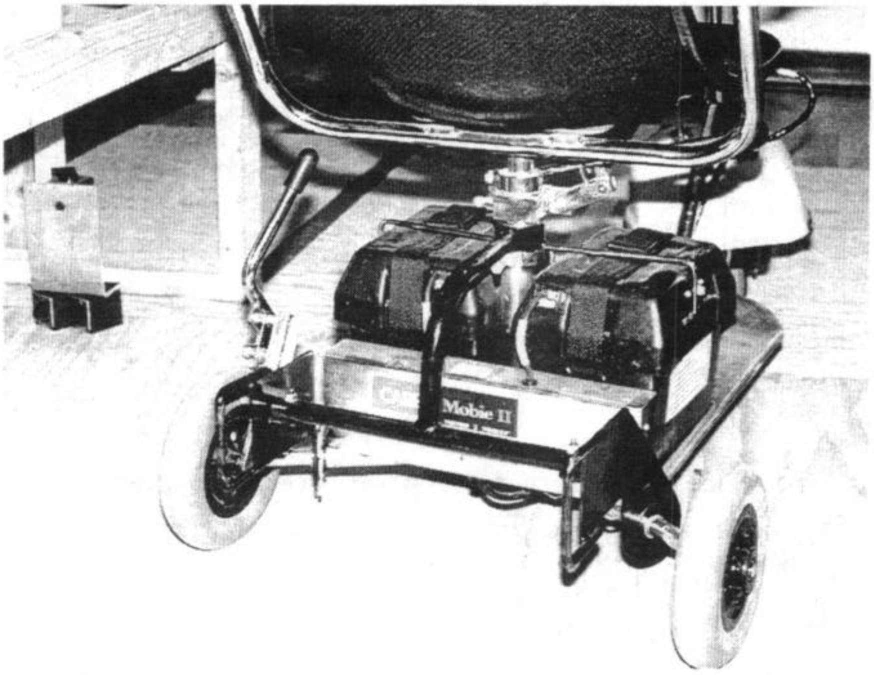

Figure 2. Scooter Interface Unit

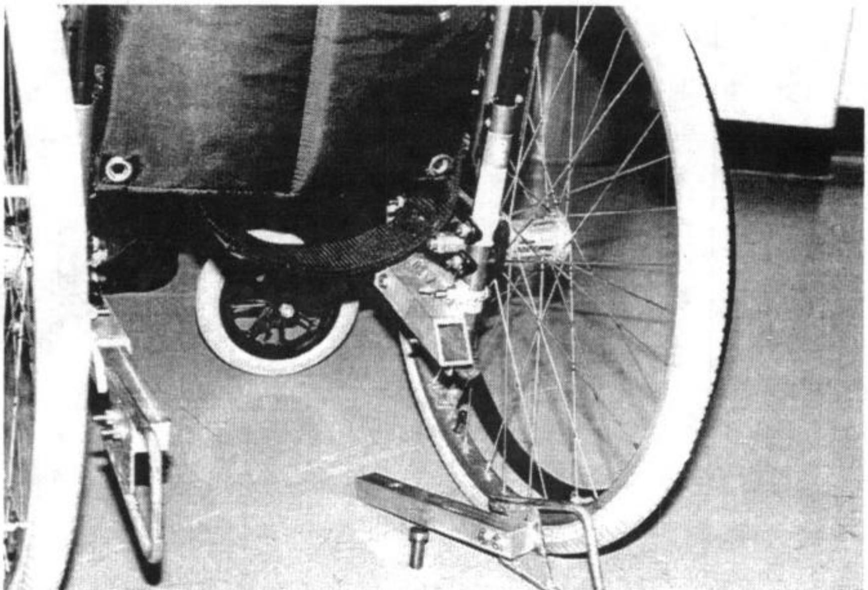

Figure 3. Manual Wheelchair Interface Unit

Human factors tests and field trials showed that the securement time took only three seconds. One of the main design goals was to minimize total cycle time of the lift and securement system, because most of the bus schedules had a maximum of 5 minutes waiting time built into each run.

Other Features

During one of the advisory committee meetings, many mobility aid users who ride transit complained that when the floor was wet there was no traction. It is recommended that nonslip flooring materials be used in the securement station.

Summary

This chapter described the ILS System design and operation, and also how the system met the customer and engineering requirements developed in the application of the quality functional deployment method.

CHAPTER 3 — HUMAN FACTORS TESTING

Introduction

This chapter discusses the needs and objectives of the human factors testing and evaluation of the OSU securement system and includes detailed descriptions and applications of the testing methodology, facilities, as well as a summary of the human factors testing. The human factors testing determined how well the system performed from the perspective of the user, the vehicle operators, maintenance, and transit management. A second part of the human factors analysis determined how well the prototype satisfied the design specifications and met the customers requirements, in other words the prototype was "benchmarked".

The static testing was carried out on a transit vehicle and in the laboratory. The on-bus testing measured accelerations of the transit vehicle under both normal and severe operating conditions. All the field tests were recorded on video tape for analysis and comparison with the recorded accelerations. The laboratory testing tested the ultimate strength of the system to failure. The dynamic testing included sled tests of the securement system and interface units to demonstrate the structural integrity of the system under crash conditions.

The Need for Human Factors Tests

Human performance consists of behaviors and actions performed by personnel in the course of completing a task. It is often degraded because of poor system designs. Human factors testing is the observation and objective measurement of mobility-aid users performance. It also includes the measurement of attitudes of the system users and transit personnel. The purpose of the human factors tests in this project was to ensure that the securement system matches the capabilities and limitations of mobility-aid users.

Objectives of the Human Factors Tests

There are six objectives of the human factors tests. Each objective is associated with a specific customer requirement for the securement system. To evaluate the securement system, a set of measures and targets were developed for each objective.

1. Safety

Safety is an important requirement. Actual safety levels are determined through testing, but, how safe the securement system appears to customers depends on how they feel about its sturdiness and performance. Thus, one way to measure customers feelings toward the system safety is through a survey of opinions about the securement system. Another way to measure perceived safety is to measure the factors that affect users feelings while latched to the capture system such as the stability of mobility-aids during normal operating conditions.

Measurement Criteria

A. Survey to determine percent of mobility-aid passengers that feel that the securement system is safe to use.

B. Survey to determine percent of mobility-aid passengers that like the sturdiness of the capture system.

C. Survey to determine percent of mobility-aid passengers that like the sturdiness of the interface unit.

The target for measures A, B, and C is 75 percent.

D. Measurement of maximum longitudinal motion of the mobility-aid during normal operating conditions.

The target is ± 2 inches (50 mm) relative to the transit vehicle.

E. Measurement of maximum lateral motion of mobility-aid during normal operating conditions.

The target is ± 1 inch (25 mm) measured at the combined center of gravity of the mobility-aid and passenger.

2. Skill Development Time (Training)

Skill development time is defined as the time necessary for the mobility-aid user and the transit operator to develop the skills that are specific to using the securement system.

Measurement Criteria

A. Measurement of the required mobility-aid passenger training time.

The target is zero minutes for mobility-aid passenger training.

B. Measurement of the required transit operator training time.

The target is 20 minutes for transit operator training.

3. Satisfaction (Acceptance)

Satisfaction refers to the degree to which mobility-aid passengers, transit operators, and maintenance personnel like the securement system. Satisfaction was determined through a survey of opinions and interviews.

Measurement Criteria

A. Survey to determine mobility-aid passenger acceptance.

B. Survey to determine transit operator and maintenance personnel acceptance.

The target for both measures, is that 75 percent of mobility-aid passengers, transit operators, and maintenance personnel should be satisfied with the securement system.

4. User Independence

User independence refers to the extent to which mobility-aid passengers can use the securement system without any assistance. This is a critical objective because one of the major customer requirements is that there be minimal dependence on the transit operator.

Measurement Criteria

Observation of user-operator interaction.

The target is that mobility-aid users should be able to use the securement system without any assistance (the transit operators' role should be limited to visual verification from the driver's cockpit).

5. Speed

Speed reflects the ease of using the securement system. The number of steps required to secure the mobility-aid and the requirements of the mobility-aid passenger to make these steps were chosen as the main measures of this objective.

Measurement Criteria

A. Observation to determine number of steps needed to secure the mobility-aid.
The target is zero steps.

B. Observation to determine number of hands needed to secure the mobility-aid.
The target is no hand, torso, or head motion beyond that normally required to guide and propel the mobility-aid.

C. Observation to determine number of steps needed to disconnect the mobility-aid.
The target is three steps. The first step is positioning the hand of the mobility-aid passenger in the x and y direction. The second step is the movement of the hand in the z direction. The third step is hitting of the release switch.

D. Observation to determine number of hands needed to disconnect the mobility-aid.
The target is one hand.

E. Time and motion studies to determine maximum securement time for mobility-aid passenger.
The target is two minutes from the time the lift is at the aisle entry of the transit vehicle to fully secured mobility-aid.

6. Misalignment Compensation

Error compensation refers to the mobility-aid positioning misalignment that must be accommodated by the capture system.

Measurement Criteria

A. Observation to determine lateral accuracy required during positioning of the mobility-aid.
The target is ± 2 inch (50 mm).

B. Observation to determine angular alignment accuracy required during positioning of the mobility-aid.
The target is ± 10 degrees.

Test Methodology

Overview

The human factor tests were conducted in two phases. The first phase were the pilot tests conducted in a laboratory at Oregon State University. The second phase were the field tests conducted at Lane Transit District in Eugene, Oregon. The tests at Oregon State University used a plywood mock up of a Corvallis City bus interior to simulate an installed securement system. The mock up was used to determine how easily passengers could use the system as well as debugging the testing protocol. Two types of mobility-aids were used in these tests: a Mobie II scooter and a Rolls 500 manual wheelchair. These tests were performed during the last part of November and the first week of December 1991.

Phase two of the tests was conducted on December 17 and 18, 1991, in Eugene. A bus provided by Lane Transit District was used in this phase of the tests. These tests were conducted in two parts. In the first part, the project team was interested in determining how easily a mobility-aid passenger could use the securement system. A Rolls 500 manual wheelchair was used in this part of the test. In the second part, the team was interested in determining how an occupied mobility-aid behaved during accelerations, decelerations, left turns, and right turns with the transit vehicle under normal operating conditions. The scooter and the wheelchair were used in this part of the test. All tests at both locations used the Beta 1 version of the capture system.

Test Setup

Subjects

Six potential subjects were identified through Lane Transit District in Eugene and the office of the Dean of Students at Oregon State University. Due to the requirement that the subjects be able to transfer from their own mobility-aids to the project equipped mobility-aids, only three mobility-aid users participated in the securement use-tests. The remaining three subjects were introduced to the securement system, were asked for their input, and participated in tests not involving actual latching of the capture system. They did not use the system because they were physically unable to transfer to a mobility-aid equipped with the interface unit.

Mobility Aids Used

Only two mobility-aids, a scooter and a manual wheelchair, were equipped with the interface unit for use in the human factors tests. All of the subjects who used the securement system were either manual wheelchair users or three-wheeled scooter users. A description of the mobility-aids used in the tests along with the make and model of each is discussed below.

Manual Wheelchair

The manual wheelchair consists of a frame with two large wheels and two smaller castering wheels in front. Figure 4 shows a typical manual wheelchair. In general, the frame of the wheelchair permits the wheelchair to be folded. Manual or standard wheelchairs usually have detachable armrests and footrests which permit transfers in and out of the chair. The tests used a Rolls 500 ATS Manual Wheelchair. The manual wheelchair was modified by mounting an interface unit to its back.

Three-Wheeled Scooters

There are many styles and models of three-wheeled scooters. Figure 5 illustrates a typical power scooter. For rear wheel drive models, the batteries and motors are underneath the seat and the steering column is attached to the front wheel. For front wheel drive models, the batteries are underneath the seat, but the motor and controller are attached to the front drive wheel. The tests used a Mobie II scooter which is a front wheel drive model. The scooter was modified by mounting an interface unit to its back.

Test Facilities

Two test facilities were used to conduct the tests. For the laboratory test, a plywood mock-up of a securement station was constructed to match the dimensions of a Corvallis bus interior, and for the field test, a transit vehicle provided by Lane Transit District was used. The vehicle's serial number is 512, it was manufactured in 1976 by Flexible, and have a model number of 4509660.

The same securement system setup was used for both facilities. The capture system was fastened directly to either the floor structure of the transit vehicle or to the plywood. The setup included a release switch to release the mobility-aid from the capture system, lights to indicate the capture system status, guide lines that were applied to the floor and the flip back seat, and a mirror to assist mobility-aid users backing into the capture system.

The purpose of the release switch is to allow users to release the mobility-aid from the capture system. A release switch was placed 30.5 inches above the floor and 29.5 inches away from the modesty panel. The switch position accommodates the 5th percentile male and takes into consideration the variety of mobility-aid heights and lengths. The switch has a large area (2.75 in. x 2.75 in.) and requires minimum force to activate. This allows users to release their mobility-aids by hitting the switch with any controllable part of their body. Another release switch was placed at the driver's cockpit to allow the transit operator

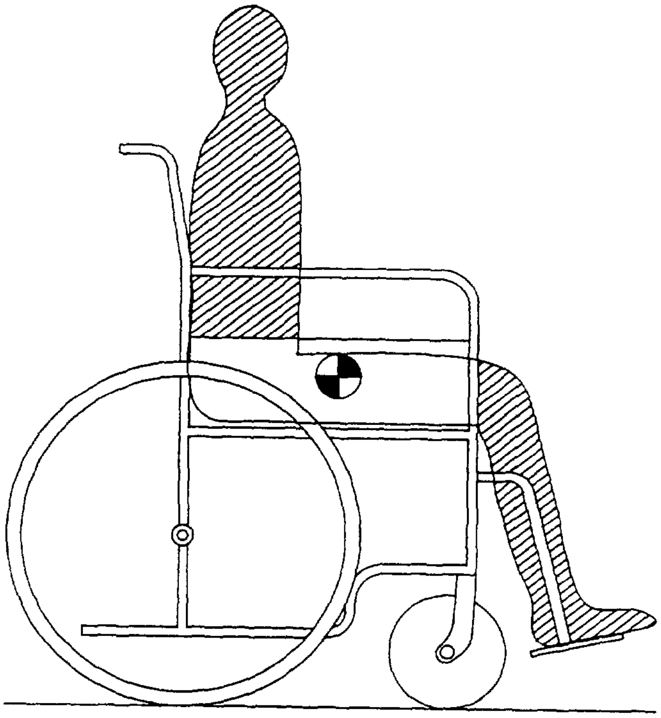

Figure 4. Manual Wheelchair

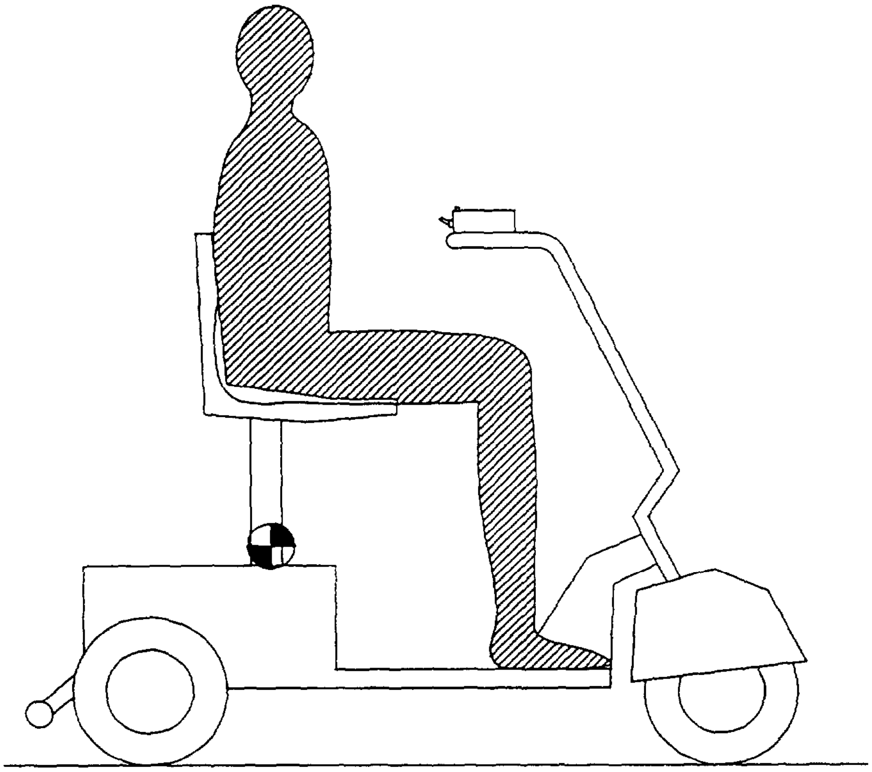

Figure 5. Three-Wheeled Scooter

to release the mobility-aid when the passenger is physically incapable of using the switch at the securement station.

The feedback light allows users to determine the capture system status. The green light indicates that the mobility-aid is latched to the capture system. When the mobility-aid is unlatched from the capture system, the green light turns off. A light indicator was placed above the release switch at the securement station. Another light indicator was placed at the driver's cockpit to allow the transit operator to verify the status of the capture system.

To assist users in maneuvering their mobility-aids into the capture system, three two-inch wide guiding lines were placed in front of the capture system. The two white lines on the floor were 30 inches apart and define the spatial envelope for the securement system. This was the width that will accommodate most mobility-aids. The lines were 5 feet long which was the minimum length that will allow a forward facing user sitting on a mobility-aid to detect the lines without having to move his or her head in any direction. The blue line between the two white lines ran to the center of the capture system. The purpose of this line was to give users a reference line to center their mobility-aids in relation to the center line of the capture system. A vertical line was placed on the wall below the release switch. This line gave users a stationary reference to mentally judge how far forward they were in relation to the capture system.

To further assist passengers in maneuvering their mobility-aids into the capture system, a plastic 20 in. x 20 in. mirror was installed on the back of the flip back seat approximately 4 inches from the top of the seat and 6.25 inches away from the modesty panel. The mirror provided users with a way to look at the interface unit and the capture system. A requirement to use the mirror was that users should be able to rotate their heads a minimum of about 45 degrees.

Protocol

The human factors tests were conducted in accordance to a carefully designed test protocol. The protocol, attached in Appendix A describes the goals of the tests, data collection methods and procedures, potential subjects, data analysis techniques, measurement methods, and a tentative testing schedule. The tests at both facilities followed the general procedure listed below.

1. The subject was introduced to the testing team.
2. The purpose of the tests was explained to the subject.
3. The subject read and signed the Record of Informed Consent (Appendix A).
4. The subject completed a Subject Information Sheet (Appendix A).
5. The design of the securement system and the method of using the system was explained to the subject.
6. The subject read and understood the instruction sheets.

7. The subject backed his or her mobility-aid into the capture system and then released the capture system. This element was repeated 10 to 12 times for each subject and was also recorded for further analysis.
8. The subject was finally interviewed and was asked to complete a questionnaire which is shown in Appendix B

The above procedure was followed consistently with each subject. Data collection was mainly gathered during steps 7 and 8. The data was then analyzed using several data analysis techniques. The results of the tests are discussed in the following section.

Results

Overview

The tests went very smoothly with no major obstacles encountered. The pilot test at Oregon State University was useful in identifying some minor mechanical problems with the capture system and also in fine-tuning the testing protocol. On the other hand, the field test at Lane Transit District in Eugene provided the appropriate environment needed to test the system under normal operating conditions. The data obtained from both tests includes information from questionnaires, interviews, and recorded measurements as well as video recordings of subjects using the securement system.

The following paragraphs describe the results of the tests. They are grouped into six main categories corresponding to the six objectives of the human factors tests. This section of the report concludes with a brief summary highlighting positive and negative results.

1. Safety

The subjects indicated that they were feeling secure when their mobility-aids were latched to the capture system. This feeling was expressed by subjects when the transit vehicle was on high speed roadways and also by subjects who participated in the laboratory test. Video recordings of the tests showed that the capture system was successful in limiting the motion of the mobility-aids.

A. *Securement System Safety*

Five subjects felt that the securement system is safe to use and one subject was not sure. The same five subjects felt that the securement system is safer than other securement systems they have used and one subject was not able to decide.

B. *Capture System Sturdiness*

All six subjects felt that the capture system appears to be sturdy.

C. *Interface Unit Sturdiness*

Five subjects felt that the interface unit appears to be sturdy and one subject was neutral.

D. *Maximum Longitudinal Motion of Mobility-Aids*

A maximum longitudinal motion of 0.75 inches was observed during right turns at about 0.37 G when using the Rolls 500 manual wheelchair. With the three-wheeled scooter a maximum longitudinal motion of 0.25 inches was observed during right and left turns at about 0.3 G.

E. *Maximum Lateral Motion of Mobility-Aids*

The maximum lateral motion observed was of 0.75 inches and 0.50 inches occurring during right turns and left turns respectively at about 0.37 G when using the manual wheelchair. No lateral motion was observed with the scooter.

2. Skill Development Time (Training)

The design of the securement system is a major departure from any other securement system users have seen, as a result, the target of zero training time for mobility-aid users was unrealistic.

A. *Required Mobility-Aid Passenger Training Time*

Two instruction sheets were developed (Appendix A) to familiarize users with the securement system. However, because the prototype was being used for research purposes, a 5 to 10 minutes discussion of the system was provided prior to the beginning of each test.

B. *Required Transit Operator and Maintenance Personnel Training Time*

A Lane Transit District operator and maintenance supervisor were trained on the system's basics: its mode of operation, its major components, and its design concept and requirements. This training session was approximately 15 minutes long. After this session, the operator and the maintenance supervisor started asking detailed questions about the securement system which indicated that they had understood the system's basics.

3. Satisfaction (Acceptance)

The users' acceptance of the system was the most encouraging outcome of the tests as described below.

A. *Mobility-Aid Passengers Acceptance*

When asked to give their general attitude toward the system, five subjects indicated that they like the securement system and only one subject indicated that he did not like it. This subject indicated that he disliked the securement system because of the need for the interface unit to be able to use the system.

B. *Transit Operator and Maintenance Personnel Acceptance*

During the tests at Lane Transit District in Eugene, the system was introduced to an operator and a maintenance supervisor and they were asked for their input and suggestions. Their initial reaction was very positive and supportive. They indicated that they liked the system and that the basic design concept was sound and practical.

4. <u>User Independence</u>

The most attractive feature of the securement system for all subjects and transit operators was the total user independence in securing and releasing the mobility-aids.

A. *User-Operator Interaction*

Subjects who used the system were able to back their mobility-aids into the capture system, latch their mobility-aids, and then release them from the capture system without any assistance. The transit operator's role was limited to verifying that the mobility-aid was latched by simply checking the light indicator located in the driver's cockpit.

5. <u>Speed</u>

The ease and speed with which users were able to use the securement system was the most impressive part of the tests. The following results summarize the ease of use of the securement system. The results do not differentiate between first time users of the securement system and persons who have used the system previously.

A. *Number of Steps Needed to Secure the Mobility-Aid*

An interesting feature of the securement system is that zero steps were needed to secure; nothing beyond what is necessary to guide the mobility-aid was needed to secure the mobility-aids. However, not all subjects were successful in securing their mobility-aids on the first attempt.

1. Approximately 69 percent of the time mobility-aid users were able to latch to the capture system on the first attempt.
2. Approximately 28 percent of the time mobility-aid users had to make a second attempt in order to latch to the capture system.
3. Only 3 percent of the time did mobility-aid users have to make a third attempt to latch to the capture system.

B. *Number of Hands Required to Secure the Mobility-Aid*

No hands were needed to secure the mobility-aid.

C. *Number of Steps Required to Disconnect the Mobility-Aid*

The maximum of three hand steps were needed to disconnect the mobility-aid from the capture system: position, extension, and application of force.

D. *Number of Hands Required to Disconnect the Mobility-Aid*

Only one hand was needed to press a low resistance 2.75 in. x 2.75 in. release switch to disconnect the mobility-aid from the capture system.

E. *Maximum Securement Time for Mobility-Aid Passengers*

The maximum securement time for mobility-aid passengers is defined as the time it takes passengers to back and maneuver their mobility-aids into the capture system. The maximum time for users to accomplish this was found to be 45 seconds. The average time was found to be 11 seconds.

6. Misalignment Compensation

It is unreasonable to expect a user to have perfect alignment either laterally or rotationally when backing into the capture system. The capture system has the capability to compensate for user misalignment. However, the results of the test showed that the required compensation was less than originally expected.

A. *Lateral Accuracy Required During Positioning*

Although the prototype capture system can compensate for ± 2 inches of lateral inaccuracy, the test results showed that only ± 1 inch is actually needed.

B. *Angular Alignment Accuracy Required During Positioning*

The prototype capture system had the capability to compensate for ± 10 degrees of angular misalignment, but the test results showed that only ± 5 degrees are needed.

Summary of Human Factors Testing

The results of the tests were generally positive and encouraging. The subjects felt that the securement system was safe and easy to use. They were particularly impressed by the independence that the system offered them in securing and releasing their mobility-aids without any assistance. The built-in capability of the capture system to compensate for users' misalignment in backing their mobility-aids proved to be a major source of users' acceptance of the system.

The amount of training time for transit operators was found to be approximately 15 minutes. This time is below the targeted time of 20 minutes. However, the amount of training time for mobility-aid users was difficult to determine. Users had to be familiarized with the setup of the test facilities and the securement system at the beginning of each test. This took approximately 10 minutes. What percentage of this 10 minute discussion period was necessary for users to be able to use the securement system is undetermined. Thus, the results of this test are inconclusive.

The test subjects did not use the floor markings or mirror and these were abandoned in subsequent designs.

The release switch was positioned within users' reach. This presented the problem of inadvertent releasing of mobility-aids while the transit vehicle was in motion. Therefore, the final design of the securement system allows automatic deactivation of the release mechanism at the users' station when the transit vehicle is in motion. Formal training sessions for users, transit operators, and maintenance personnel are suggested for effective use of the securement system. Carefully tailored video recorded training sessions for each group will be useful in making the training process less time consuming.

The human factors tests have been very successful. The objectives of the tests were achieved with the limited number of subjects who participated. However, as the securement system is refined and prepared for full scale field testing, more rigorous human factors tests will be required. These tests should include a larger number and a greater variety of subjects.

CHAPTER 4 — ILS SYSTEM ENGINEERING TESTS

Introduction

An important feature of any securement system is its performance under load. In this case performance means two things: (1) how much movement of the mobility aid is allowed by the securement system under normal operating conditions? and (2) does the securement system have the required strength to prevent unwanted movement of a mobility aid during crash conditions? The approach taken to measure these engineering performance parameters was to test the prototype securement system in progressively worse (higher load) conditions up to the final sled test, which imposed an instantaneously applied force of 4200 pounds on the system. As often happens when conducting engineering tests, some of the results led to additional, unplanned testing to answer questions about why the results turned out the way they did. The specific engineering tests performed are summarized here and described in detail in the sections that follow:

Normal Operations Testing — A prototype securement system was installed on a lift equipped Lane Transit District bus. The bus was driven on the road as though following a normal bus route and the movement of the mobility aids (manual wheelchair and three-wheeled scooter) was observed and recorded on video tape. In addition, the bus was driven in a parking lot to extreme conditions for turns left and right, for acceleration, and for stopping. The accelerations corresponding to those conditions were measured and the movements of the mobility aids were recorded on video tape.

Side Slip Testing — As a result of the normal operations testing, it was decided that more information was needed about the effect of side loads on stationary mobility aids. A tilt table was built and a manual wheelchair and three-wheeled scooter were tested for movement due to side loads both with and without the securement system. In addition, a power base was tested for movement without a securement system.

Quasi-Static Testing — To demonstrate the strength of the securement system (both the capture mechanism and the interface unit), the system was loaded in an INSTRON tensile test machine to 6000 pounds. This load corresponds to a 300 pound mobility aid being held by the securement system during a 20 G crash.

Sled Testing — Two prototype securement systems, a 200 pound power base and a 120 pound three-wheeled scooter were taken to the sled test facility at the University of Michigan Transportation Research Institute (UMTRI). First, the scooter was tested with a 50th percentile male dummy in a 20 MPH 10 G crash to simulate a typical expected crash load in a large bus. The scooter was then tested without the dummy at 30 MPH and 20 G to simulate a crash in a van. The second securement system was then installed and the power base was subjected to the same test conditions.

Latch Mechanism Testing — Following the sled tests, a test jig was manufactured to allow both static loading and the application of a sudden impact to a single latch. Although it was impractical to reproduce the step function application of load seen during the sled tests, the tests were conclusive in defining the conditions under which the latch could and could not release due to impact.

Each of these engineering tests is described in detail in the sections that follow. Also, additional information about several of the tests is included in Appendix C.

Normal Operations Testing

The primary goal of normal operations testing was to confirm compliance with the current ADA requirements. These state that there should be no more than 2 inches of movement for a mobility aid on a bus during normal operations. A secondary goal was to measure accelerations of the bus during normal operations so that accurate information would be available about what constitutes "normal operations."

These tests were conducted in Eugene, Oregon, where the Lane Transit District System provided a lift equipped bus, the use of their shop, maintenance assistance and a driver. Over the course of three days the equipment was installed, a complete series of tests were run on the three-wheeled scooter, a complete series of tests were run on the manual wheelchair, a day was taken for human factors testing, and then all of the equipment was removed from the bus.

Setup required installation of the securement system, accelerometers, the data acquisition system, and a video camera. All of this equipment was installed in an accessible 1976 Flexible Model Number 4509660 vehicle. This bus was equipped with a lift (Lift-U) at the front door, and securement stations equipped with a Lane Transit District designed belt tiedown system. The securement stations were near the front of the bus, across the aisle from each other, and accessible by folding up side-facing seats. The side behind the drivers station was equipped to secure three or four wheeled mobility aids; the one on the door side was not equipped for three-wheeled scooters.

The ILS System was installed in the station on the door side of the bus. The capture mechanism was mounted directly ahead of the rear modesty panel using wood screws to fasten the steel mounting plate of the prototype to the plywood floor of the bus. The release switch and indicating light for the user was mounted on a sheet metal plate which was fastened to the bottom of the fold up seat. The light and switch for the driver were mounted in a metal box which was located near the driver but not actually in the driver's station.

The power for the release mechanism was derived from a standard automotive battery located immediately behind the capture mechanism (on the other side of the modesty panel). Although the installation was clearly not intended to be permanent, all of the essential features were installed in the correct locations and the system was fully functional.

In addition to the securement system, a data collection system was installed. This consisted of a Valentine Research G-Meter and data collection/reduction device, a laptop computer for data storage and presentation, and a power source. The G-Meter is a three-axis accelerometer module. It contains an accelerometer for measurement of fore/aft (acceleration/braking) accelerations, another for measuring accelerations due to turns (side loads), and a third used to compensate for tilting of the vehicle in the fore-aft direction so that readings from the other two can be converted to true absolute accelerations. The inertial characteristics associated with the supplied accelerometers was unavailable so the data collected with this instrument must be qualified in terms of its value in defining accelerations associated with "normal" operations of a bus. (Note: Although the data may not be completely appropriate for developing specific standards, it is nevertheless valuable for purposes of this study and should serve as a good basis for collecting more detailed information.)

The data collection/reduction device is designed to work with this specific acceleration module and it includes several particularly useful features. In addition to having a power supply to convert from a 12 V automotive source, it includes a pre-programmed microprocessor, sufficient memory to store up to 8 minutes worth of data, and an LED display which provides both digital and graphical output in real time. It is easy to use because the controls follow the format of a VCR (play, stop, pause, rewind). The output of this device is a graphic presentation of fore/aft, side-to-side, and total acceleration. With data stored on the laptop computer, it can be printed as shown in Figure 6.

The accelerometer module was installed on the bus in accordance with the instructions that came with it. It was mounted near the center of the bus on the floor with the axis oriented to provide data for accelerations in the fore-aft direction and the side-to-side direction with the third accelerometer oriented to compensate for sideways tilting of the bus.

After all equipment was installed and checked, the severe in-service condition testing was conducted according to the following protocol:

1. A Mobie II three-wheeled scooter was installed in the securement station.
2. Maximum condition testing was conducted in the Lane Transit parking lot. For all tests, a test engineer whose size approximates a 95 percentile male occupied the mobility aid. Each of the following tests was conducted twice before moving on to the next:
    a. "Panic Stop" from approximately 20 MPH
    b. Maximum rate left turns - max. rate turn at approximately 20 MPH
    c. Maximum rate right turns
3. Following tests in the parking lot, the bus was taken on-road to monitor mobility aid movement during normal operations (as opposed to maximum conditions).
4. The tests listed above were repeated for the Rolls manual wheelchair.

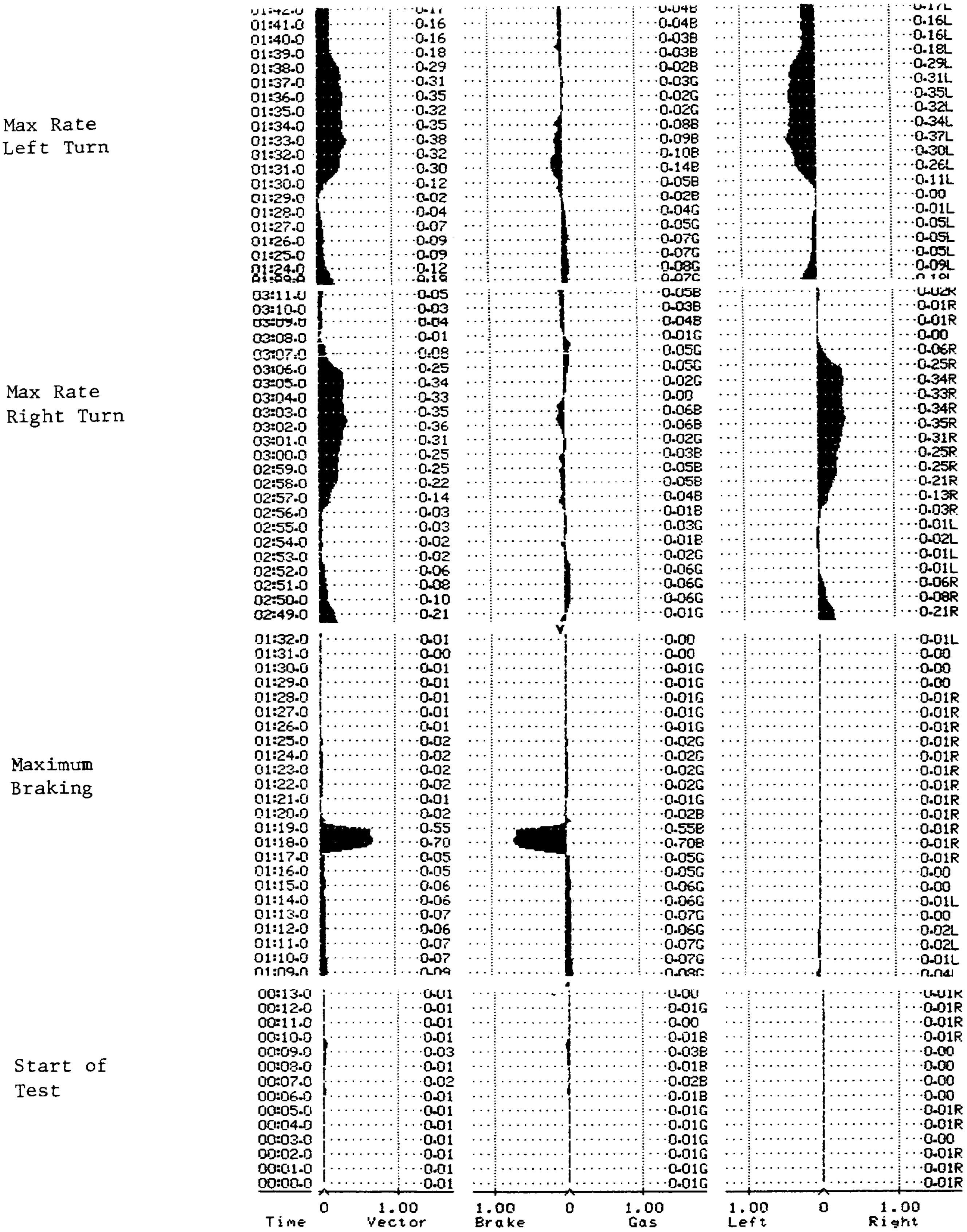

Figure 6. Example of Acceleration Data from Engineering Tests on an LTD Bus

Results of this testing can be summarized by saying that under all conditions that could occur on a bus (short of a collision), mobility aids secured in the OSU securement system will meet the ADA requirements for motion. More specifically, the results were as follows.

Panic Stop

The maximum measured acceleration was 0.71 G (22.86 ft/sec^2). The three-wheeled scooter demonstrated no fore-aft motion and no side motion. During the course of the stop, the occupant load shifted from the seat to the steering tiller causing the front wheel to compress and subsequently rebound. This vertical motion at the front wheel was approximately 1 inch of compression and 1 inch of rebound and the front wheel did not leave the floor. The wheelchair did not move measurably in any direction during the panic stops.

Turns

The maximum measured acceleration for turns was 0.35 G (11.27 ft/sec^2). During these maximum rate turns, a rear wheel of the occupied three-wheeled scooter lifted (the wheel on the outside radius of the turn). This tipping motion was halted by the securement system at a rear wheel vertical displacement of about 3/4 inch. There was no sideways motion or slipping by any part of the three-wheeled scooter in any of the maximum rate turn tests.

The response of the wheelchair to the maximum rate turn tests was to have the front wheels caster very slightly away from the turn direction. Other than the angular displacement of the front wheels due to castering, there was no measurable motion by the wheelchair during any of the turn tests.

On-Road Tests

Neither the manual wheelchair nor the three-wheeled scooter moved measurably during the on-road testing. Each test included approximately 15 minutes of driving through city traffic, on a freeway, and over rougher access roads. Except for slight wheel compression on the scooter during severe bumps, there was literally no motion of the mobility aids at all in any direction during these tests.

Conclusions

Several conclusions were drawn from the results of the normal operations testing. First, it is clear that under even the most severe driving conditions, a mobility aid that is secured using the system developed under this contract will not move appreciably in any direction. Second, it appears that natural resistance to sideways motion of powered mobility aids is substantial and is due to friction between the wheels of the mobility aid and the bus floor. Third, either the conditions that define normal operations as referred to in the ADA need to be laid out in fundamental units such as acceleration in the fore/aft direction, acceleration in the sideways direction, and total acceleration (vector sum of the previous two), or, the specific conditions that are to be used in testing must be described in great detail — for example, stops must be made in a straight line from an initial speed of 20 MPH and must be completed within 1.3 seconds.

Quasi-Static Testing

Following the completion of engineering and human factors tests on the Lane Transit District bus, the prototype securement system was removed and returned to the laboratory at Oregon State University for quasi-static testing. The goal of this testing was twofold: first, this would demonstrate compliance with the ADA requirements for securement system strength, and second, it would serve as a screening test to identify structural problems before the more expensive sled tests were performed.

The test system used was an Instron tensile test machine equipped with a computer controlled automated test program. This unit is a large frame with fixed attachment points at the top and bottom, and a carriage that provides either a precision load or displacement by moving vertically downward between them. For tensile tests then, the item to be tested is attached between the top frame member and the moving carriage. Then, as the carriage moves downward, the test item is loaded in tension.

For the securement system, a 1 inch thick steel plate was fastened to the top frame member and the interface units were attached to this plate. The securement system was attached to the moving carriage by an adaptor frame. This allowed testing of virtually the entire securement system including the column on which it is mounted. In addition to the basic readings of load (pounds of applied force) and deflection (inches of displacement) provided by the Instron, strain gages were mounted to provide data on deflection of the adapter plate for the interface rings and the support column for the securement system, and several mechanical gages for deflection were mounted to aid in quantifying deflection of the various components of the securement system as load was increased. Also, the entire load test was videotaped from two angles.

The test procedure began with zeroing the entire system. The complete securement system was moved from its low installation point, up to a point where the latches had closed on the fixed D-Rings of the interface plate. At this point there was some clear space between the latches and the D-Rings. The securement system was then jogged back down to the point at which load on the D-Rings was measured at 10 pounds. The system was then jogged back up to the point where the load had just reached 0 pounds. This was taken to be the zero reference point for deflection and load. All strain gages were read, deflection indicators set to zero, and the Instron re-calibrated to start at this point.

The test was conducted using a constant rate of displacement as the independent variable. The rate selected was very low, 0.05 inches per minute and was continued to a point at which total load on the securement system was 6000 pounds. This final load corresponds to what would be imposed on the securement system by a 300 pound mobility aid in a 20 G (644 ft/sec^2) deceleration. The general conclusion from this test was that the securement system, as designed, has more than adequate strength, both in terms of the criteria defined by the ADA and in terms of the OSU team's design requirements. A review of the test data in conjunction with a teardown of the tested unit did, however, indicate that some design review might be in order.

In Figure 7, the test results showing load as a function of deflection, it can be seen that for the first half inch of deflection, the slope is quite low. This corresponds to compression of the rubber donuts that are used for energy attenuation. The important point is that the end load for this phase of loading is at something less than 1000 pounds. While this clearly demonstrates that energy will be absorbed during a sudden deceleration, the value of the energy attenuation may be peaking out at a lower than optimal value.

The second phase of the test, going from about 1/2 inch to 1 inch of deflection, has a much steeper slope than the first part. Also, there are two substantial dips in the curve which corresponded with a snapping noise heard and recorded during the test. Post-test disassembly of the system revealed that these two dips corresponded to the shearing of two small bolts holding the limit switches (one associated with each latch).

The final significant observation came after the test had officially ended, but before the securement system was unloaded. As the test group was standing around waiting for the computer operator to unload the Instron test machine, one of the securement system latches suddenly released with a loud bang! Immediate observation and the subsequent teardown of the system revealed no obvious reason why this happened. However, the latch and keeper mechanism had enough play that it appeared that under a high load, the latch could possibly slide past the keeper resulting in an unlatched condition. Prior to sled testing, the thickness of the keeper was doubled to eliminate the possibility of the latch sliding by during the sled tests.

Side-Slip Testing

As a result of the engineering tests completed on the Lane Transit District bus, there was some curiosity about the inherent resistance of mobility aids to side-load induced motion. Some important work has been done in the past on the effects of side-loading on a manual wheelchair in motion, but no previous work has been identified which deals with the situation encountered on a bus-side loading of a static (parked) mobility aid. To investigate this circumstance, a tilt platform was built and a variety of different mobility aids were tested to determine under what side load conditions they would move and whether that motion would be rolling, slipping (sliding), or tipping.

The platform used for testing was four feet wide by eight feet long. The surface on which the mobility aids would rest included typical smooth bus flooring material, typical grooved material, and the raw plywood. One side of the tilt platform was attached to a hydraulic lift and the other was equipped with rollers. In operation, the lift side of the platform was raised very slowly straight up with the other side slowly "rolling" inward on the floor. A large tilt angle indicator was used to determine the actual tilt of the table floor.

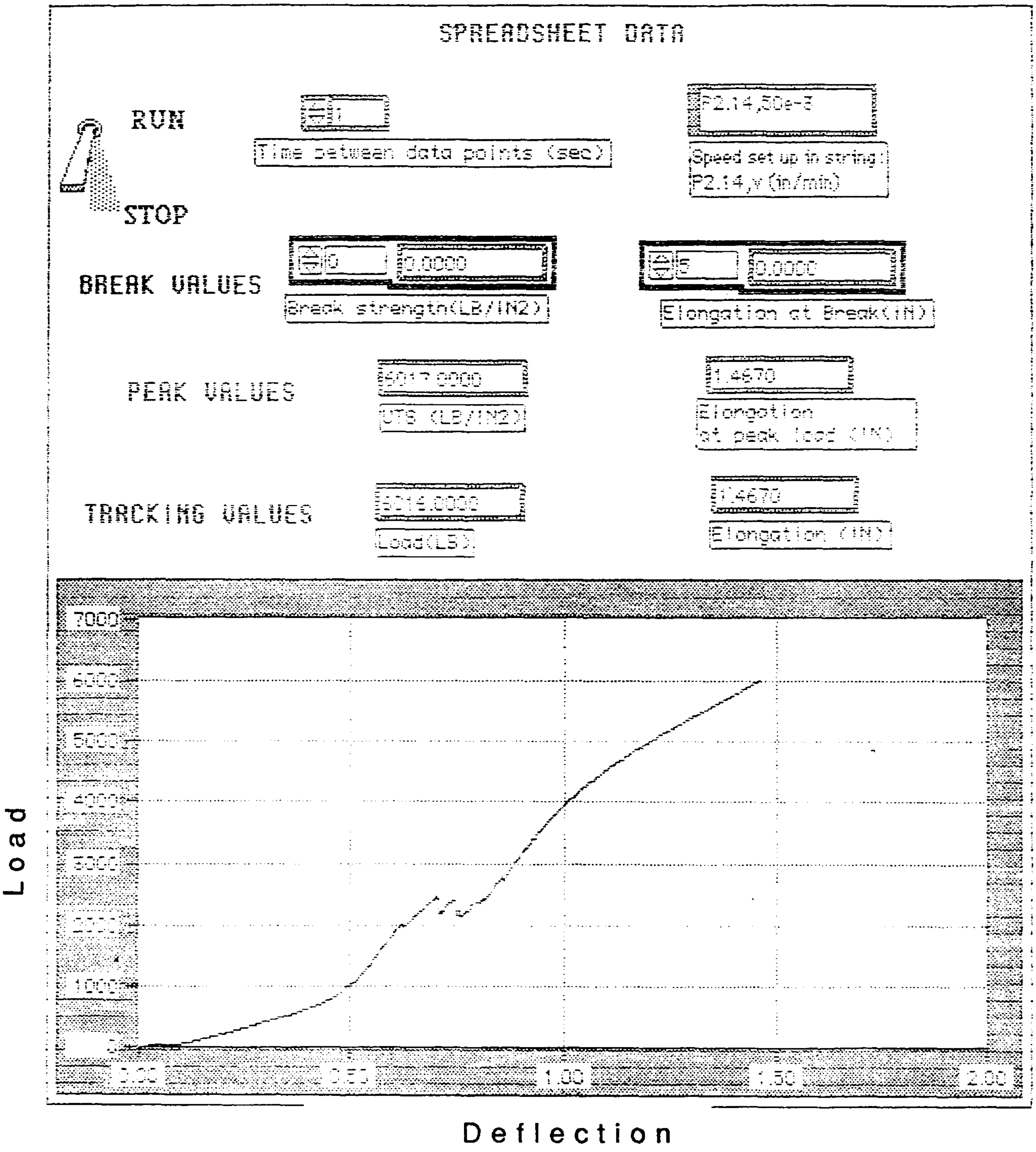

SPREADSHEET DATA

RUN

STOP

Time between data points (sec): 1

Speed set up in string: P2.14,v (in/min): P2.14,50e-3

BREAK VALUES

Break strength(LB/IN2): 0 0.0000

Elongation at Break(IN): 5 0.0000

PEAK VALUES

UTS (LB/IN2): 6017.0000

Elongation at peak load (IN): 1.4670

TRACKING VALUES

Load(LB): 6016.0000

Elongation (IN): 1.4670

Figure 7. Load vs Deflection During Quasi-Static Load Test of the Securement System

The mobility aids used in this series of tests included a manual wheelchair, a powered wheelchair, a powerbase, and a three-wheeled scooter. The manual wheelchair and the scooter were equipped with interface units to work with the OSU securement system so tests with and without the system were included as a variable for those two mobility aids. In addition to there being a variety of mobility aids, there were numerous other factors included as variables in this test series. The overall test sequence included each of the following conditions:

I. Smooth Rubber Floor Surface
    A. Surface Dry
        1. Mobility Aid Occupied by 50th percentile adult male
            a. Manual Wheelchair
                i. Without securement system
                ii. With securement system
            b. Three-Wheeled Scooter
                i. Without securement system
                ii. With securement system
            c. Power Base
            d. Powered Wheelchair
        2. Mobility Aid Unoccupied
            a. Manual Wheelchair
                i. Without securement system
                ii. With securement system
            b. Three-Wheeled Scooter
                i. Without securement system
                ii. With securement system
            c. Power Base
            d. Powered Wheelchair
    B. Surface and Mobility Aid Wheels Wet
        1. Mobility Aid Occupied by 50th percentile adult male
            a. Manual Wheelchair
                i. Without securement system
                ii. With securement system
            b. Three-Wheeled Scooter
                i. Without securement system
                ii. With securement system
            c. Power Base
            d. Powered Wheelchair

2. Mobility Aid Unoccupied
    a. Manual Wheelchair
        i. Without securement system
        ii. With securement system
    b. Three-Wheeled Scooter
        i. Without securement system
        ii. With securement system
    c. Power Base
    d. Powered Wheelchair

II. Ribbed Rubber Floor Surface
(Complete set of variables as listed for smooth floor)

III. Plywood Floor Surface
(Complete set of variables as listed above except no wet surface tests)

In all, 32 different conditions were tested. In all cases, the mobility aids were oriented directly normal to the axis of tilt and brakes were left in the off position (for electric powered mobility aids, the control system and motors were left engaged providing electrical braking, but no mechanical brakes were set). The specific procedure followed for each of these tests was as described below:

1. Install the mobility aid (wetting the wheels and floor surface if required)
2. Align the front wheel(s) to be pointing straight forward
3. Check zero on the inclinometer
4. Begin tilting the surface upward and continue until there is any sustained motion on the part of the mobility aid.
5. Record the angle at which the sustained motion occurred.
6. Repeat the entire test once more.

Before presenting the conclusions for this side load testing, it is worth taking a brief look at how this test differs from the type of side load that a mobility aid might encounter on a bus, for example. First, this is obviously a very slow (quasi-static) sort of a test as opposed to a transient acceleration such as might be experience when a bus turns a corner. In this regard, the test situation is clearly the worst case; you can push your car with a steady force applied for a long time, but it probably wouldn't move at all if you ran into it with your shoulder (ouch!) and bounced off. Second, the nature of the forces provided by the tilt table are not quite the same as experienced in a bus. The difference, however, can be compensated for mathematically so that the net result is exactly the same. Finally, because the criteria for selecting a certain angle as being the "critical angle" was sustained motion on the part of the mobility aid, some of the angles recorded correspond to excruciatingly slow motion. This slow rate of motion, although it was sustained, would not occur in a real environment because it requires that the side load be sustained over a long period of time.

With those caveats in mind, the general conclusions that can be drawn from the side load tests are as follows:

1. There are two ways in which movement occurs as a result of a side load on a mobility aid: the aid can slide sideways or it can roll away.
2. Manual wheelchairs are most prone to movement due to side-loads. This is because they have very low rolling resistance in both the forward direction and for the front wheels when castering. When a side load is applied, the front wheels typically caster and the rear wheels roll to follow.
3. Powered mobility aids with their inherent braking greatly resist the rolling mode of movement typical for manual chairs. Although the front wheel(s) may start castering, it will be at a much higher side load and will occur in conjunction with sideways slipping of one or more wheels.
4. The scooter, with its inherent resistance to sideways slipping and high center of gravity, nearly always moved in a tipping mode rather than slipping across the floor.
5. When the manual wheelchair was secured using the securement system, virtually all sideways motion could be prevented. This is because the point of rotation is moved behind the wheelchair by the securement system thus requiring the rear wheels to slip if sideways motion is to occur.
6. When the scooter was tested using the securement system, the results were exactly the same except that once tipping had occurred, it was limited to one of the rear wheel being about 1/2 inch off of the ground by the securement system.

As described above, this testing was neither exhaustive nor highly quantitative, but it was nevertheless quite a lengthy series of tests which revealed some important facts about the effects of side-loads on static mobility aids. Considerably more detail is available in the form of a report included as Appendix D.

Sled Testing

Background

The goal of sled testing of the securement system is to simulate, as closely as possible, the conditions that would be encountered in a vehicle crash. This is accomplished by mounting the securement system on a sled, installing an interface equipped mobility aid (and test dummy if appropriate), using a modest acceleration to achieve a constant initial velocity, and then decelerating the sled at a rate which will produce the desired G loading. There are many facilities for doing sled tests in the United States: the one selected for this test was that located at the University of Michigan Transportation Research Institute

(UMTRI). This site was selected more for the appropriate experience and knowledge of the director, Larry Schnieder, than for the facilities.

The UMTRI facility is a rebound type sled; the first half of the deceleration period takes place as the sled slows from the initial velocity to zero, and the second half as the sled goes from zero back to the initial velocity but in the opposite direction. Physically, the sled is accelerated by compressed air to the desired initial velocity (approximately 1/2 of the equivalent "crash" initial velocity), and then as the deceleration period begins, the sled runs into a piston which compresses nitrogen in a cylinder until the sled is stopped. The compressed nitrogen then forces the piston (and sled) back in the direction it came until it has achieved nearly the same speed that it started with. For example, to achieve a 30 MPH crash with 20 G loading the sled would be accelerated to approximately 17 MPH. It would then run into the cylinder and rebound, ending up travelling back towards the beginning of the track at about 13 MPH. Thus the total change in velocity would be 17+13 or 30 MPH. The relationship between velocity, and acceleration for this type of facility is shown in Figure 8. More detailed information about the facility and the parameters for the tests that were run is included in Appendix C.

Testing

A total of four tests were run, two using a Mobie II scooter as the test mobility aid, and two with a Fortress 655 powerbase. For both types of mobility aids, the test procedure was as follows:

1. A 20 MPH 10 G test with a 50th percentile male dummy strapped into the mobility aid with a lap belt only.
2. A 30 MPH 20 G test with the mobility aid only (no test dummy)

The first test was selected based on the experience of Larry Schneider and the goals of the test team. There are no standards for a direct frontal collision in a large (mass transit) bus. However, it is to be expected that the overall energy and acceleration levels involved will be substantially less than that experienced in a demand responsive vehicle for which the standards are 30 MPH and 20 G. Since the securement system was designed specifically for mass transit, the initial test for each mobility aid was conducted to demonstrate securement under mass transit crash conditions. Although the securement system is designed to secure only the mobility aid, not the occupant, a test dummy was used for this initial test to demonstrate that the securement system would not allow the mobility aid to impose any additional load on the occupant. The dummy was restrained in the mobility aids with a commercially available lap belt only.

The second test was conducted to demonstrate that the securement system would be effective at the higher energy and acceleration levels expected when demand responsive vehicles are involved in a frontal crash. The conditions of 30 MPH initial velocity and 20 G deceleration correspond with standards set for testing securement systems for use in demand responsive vehicles. To maximize the information gained about performance of the securement system, no test dummy was used during these tests; the

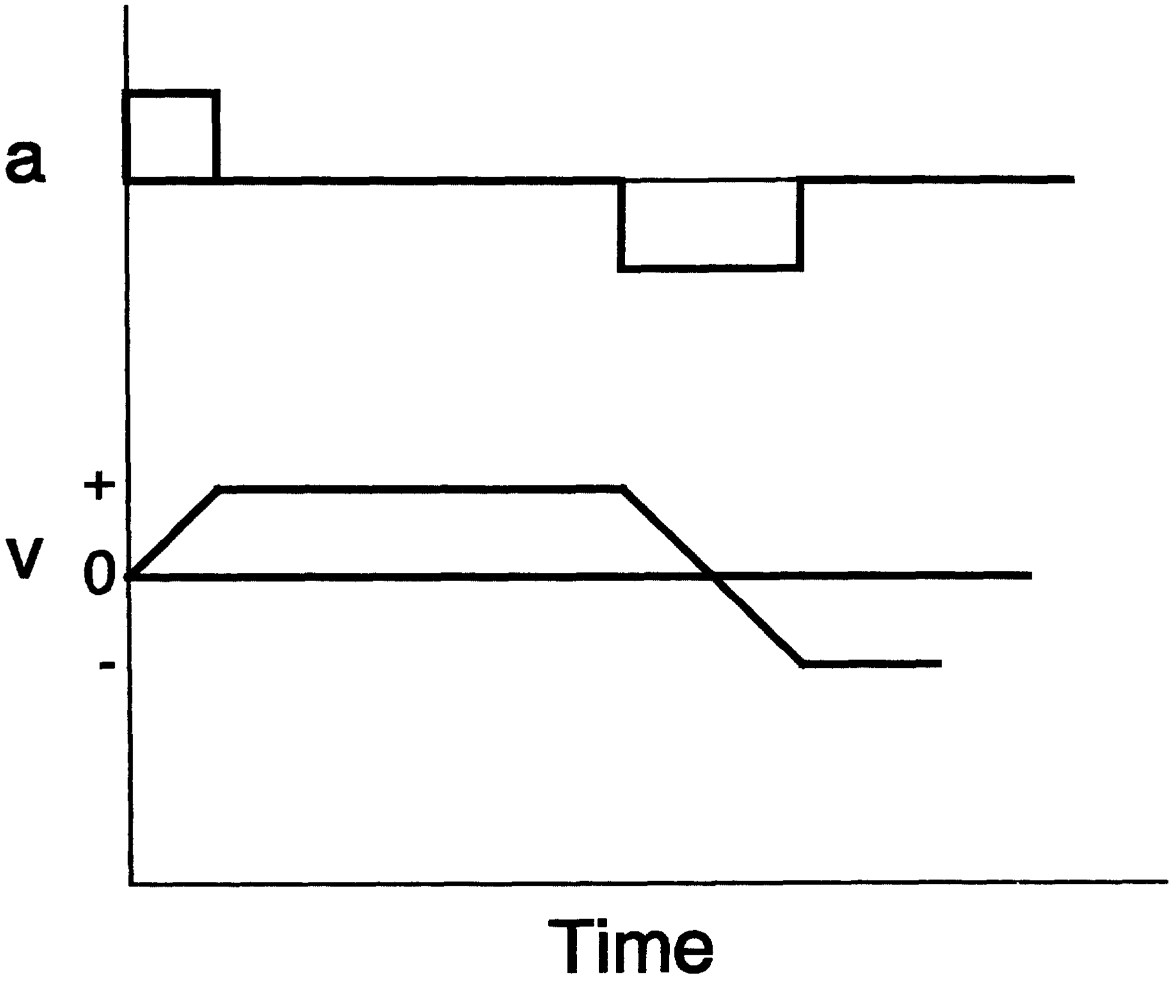

Figure 8. Relation Between Sled Velocity and Acceleration

dummy, its lap belt, and its instrumentation connections partially obscured the view of the securement system and mobility aid interface units.

Results

Low Energy Test

The results of the mass transit crash simulation tests were very satisfactory. For both types of mobility aids the total motion of the mobility aid was less than one inch throughout the deceleration period. This corresponds directly to compression of the rubber donuts used for energy management in the securement system. The test dummies were held by the lap belt, but it was clear that the securement system prevented the mobility aids from "pushing" on the dummies in both cases.

The Mobie II experienced some deformation as a result of the lower level test. The tiller was bent from impact with the dummy's head and chest. The frame was bent downward at the juncture of the axles and seat post. Also, the battery cases, which had been filled with sand to simulate batteries, were out of position and it appeared that they would have left the mobility aid if they hadn't been tied in with a safety rope. The securement system and interface units showed no sign of having been in a "crash".

The Fortress 655 powerbase suffered very minimal damage from the lower level test. As with the scooter, the battery cases had moved and it appeared as though they might have been separated from the mobility aid had they not been secured with a safety rope. The only other sign that the securement system and vehicle had been through a crash test was that the interface unit adapter plates had been bent upwards slightly. This appears to have been the result of the powerbase tires compressing during the test.

In general, the conclusions that were reached from the lower level testing were as follows:

1. The securement system does an excellent job of securing both the three-wheeled scooter and the much heavier power base through a 20 MPH 10 G crash
2. There was very little motion of the mobility aids through the course of the crash. This includes upwards motion resulting from both the crash and the rebound of the compressed wheels. This is particularly significant since this securement system makes no use of a front wheel tie-down, but rather, relies on the attachment point being slightly above the center of mass for stability during a crash.
3. The securement system will not allow the mobility aids to impose any load on the occupant during a crash, even if the occupant is well restrained.

High Energy Tests

The results of the higher energy tests, conducted with an initial velocity of 30 MPH and a deceleration of 20 G, were not as satisfactory as the first tests. In fact, this was a classic demonstration of why sled tests are necessary to demonstrate the integrity of any mechanical securement system in an impact situation. Static testing can demonstrate strength, but only a sled test can demonstrate that there are no adverse effects resulting from momentum and inertia of the parts involved.

In both the scooter test and the power base test, a single latch on the securement system released at the beginning of impact leaving a single interface unit and latch to carry the load. The cause of release turned out to be a very subtle and non-intuitive result of latch momentum which caused the keeper to be forced out of place by the latch. This is more fully explained in the next section, latch mechanism impact loading.

In the Mobie II Scooter test, it was the left latch that opened on impact. As a result, the entire securement system and mobility aid pivoted around the center post of the securement system until the center of mass was directly in front of it. The right side interface unit D-Ring remained in the securement system and, although it was severely deformed, remained intact throughout the deceleration. The final result was a badly twisted but still intact Mobie II scooter that had been prevented from flying away during impact by the securement system.

With the Fortress 655, it was the right side latch that released. Unfortunately, the interface designed for this mobility aid had transitions from the vertical D-Rings to a horizontal member at the point of attachment to structural members on the mobility aid. This was known in advance to be a weak point in the event that only one side of the interface unit was latched. This was borne out in the high energy test. When the right side latch released, the left side absorbed all of the forces due to the deceleration of the sled and almost immediately began "ripping" across the horizontal portion of the right side interface unit.

It is worth noting that after the first high energy latch failure (the Mobie II test), the failed securement system was opened up and a careful visual inspection was made. The spring holding the keeper in place on the failed latch was found to have moved out of place thus releasing all pressure on the keeper. Before the second high energy test (powerbase), For the next test, the securement system was opened up immediately prior to the test and inspected carefully for any problems with the placement of latch parts, springs, the release mechanism, etc. No problems were found, and all components appeared to be in their correct places.

Time constraints prohibited an extensive examination of the second failed securement system immediately following the sled test. However, a preliminary check showed all components on the failed latch to be intact, in their correct positions, and the latch operating normally. In other words, the latch acted as though it had been released using the manual release cable just at the start of impact in the test.

A detailed description of the test conditions and a transcript of the post-test examinations is included in Appendix C of this document. The conclusions that were drawn from all of the sled tests were as follows:

1. The securement system concept of a rigid mobility aid interface captured by a nearly rigid securement system is excellent. In a simulated mass transit vehicle frontal crash, the mobility aids are held securely in place and impose no load on the mobility aid occupant. Further, the careful selection of securement point height

resulted in a very small vertical motion by the mobility aids during sudden decelerations, even those with 'bouncy' pneumatic tires.

2. When a sudden, high force load is applied through the interface unit D-Rings, an inherent flaw in the latch mechanism design for this system results in release of the latch.
3. The way in which the interface unit is attached to the mobility aid must be given careful consideration in final designs. As would be expected and was demonstrated by the sled tests, transferring the energy of impact through a horizontal plate can lead to catastrophic failure through a tearing of the plate.
4. Impact testing should be a requirement for all securement systems which include moving parts. This is the only way to insure that parts with adequate strength will not change in position through some mechanism associated with the dynamics of impact and in a way that results in securement failure .

Latch Mechanism Impact Loading

As a result of the latch failure during the sled tests, the latch mechanisms in the securement system were carefully taken apart, examined, reassembled, and cycled in an effort to determine the unlatching mechanism. It was concluded that the unlatching occurred as a result of a subtlety in the keeper/latch geometry. To demonstrate that this was in fact the cause of the latch failures, a latch test setup was designed and built. Although it was not practical to build a device which could provide the same load curve as was developed in the sled tests, the device was able to provide either a static load or a dynamic loading with approximately the same total force as the sled tests. The difference in the dynamic loading was that the sled could apply the total load faster than the latch test apparatus.

The testing of the latch mechanism was done in two parts - static loading and dynamic loading. The theory which best explains the latch releasing under sudden, high applied loads, indicates that even under static loading, if the latch is disturbed enough to start it moving, and if the applied load on the latch is big enough, then the load would cause the latch to accelerate out from under the keeper and release. The static tests were designed to determine (a) whether or not the theory could be confirmed experimentally and (b) what the minimum applied load is for the release to occur. The static test procedure and some observations made during the testing are as follows:

1. Load the latch with a static load of approximately 3000 lb. with the latch and keeper in the same relative positions they were in for the sled tests.
2. Noting that the latch does not spontaneously open, tap the latch very lightly to impart an initial motion to it.
3. Repeat steps 1 and 2 with progressively lower applied static loads until the latch fails to open when tapped.

4. Load the latch with a static load of approximately 3000 lb with the latch and keeper in the correct, inherently (at least theoretically) stable positions identified after the sled tests.
5. Noting that the latch does not spontaneously open, tap the keeper with progressively harder taps until the latch has been moved about 1/4 inch with no evidence that the latch is going to open.
6. Repeat steps 4 and 5 several times.
7. Repeat the entire procedure with a second latch mechanism.

The main conclusion was that the latch could open under the conditions of (1) a minimum load of about 1500 pounds is applied to the latch and (2) a small amount of movement between the latch and the keeper. It should be noted that these results explained two previously unexplained observations. The first was the sudden release of one latch during the original static tests of the securement system. The second was the release of the latches during the high energy sled tests but not the low energy runs. In the low energy tests, the maximum load applied to a single latch mechanism was about 1000 lb (the 200 lb Fortress at 10 G); in the high energy tests it was about 2000 lb (the 200 lb Fortress at 20 G).

With confidence that the mechanism by which the latches released during the sled tests had been identified, testing progressed to dynamic loading. As mentioned earlier, it was known before starting these tests that we would not be able to duplicate the very fast application of load that the sled tests provided. This is because the test facility uses a lever arm and a fixed weight to apply the load. To get a higher load, a longer lever arm is used and that translates to more distance (time) until the full load is applied (recall that the latch mechanism includes a shock absorbing system designed explicitly to decrease the rate of loading during an impact).

The test procedure for dynamic loading was as follows:

1. Set the latch mechanism to the "as designed" geometric configuration.
2. Apply just enough pre-load to keep the latch in tension prior to the impact loading.
3. Drop the weight on the lever-arm to dynamically load the latch mechanism.
4. Inspect the latch mechanism and repeat steps 1 through 3 if appropriate.

These tests were repeated until all of three of the latch mechanisms available had been broken in one way or another. In all of this testing, a latch was made to open as a result of loading once. In general, the loading resulted in the latch ending up in a position identical to that in the static tests when the load was to low to cause opening when tapped. This was a direct indication that the rate of loading our test fixture could achieve was not high enough to consistently cause the latches to open. The single spontaneous opening that did occur helped to confirm our suspicions that our test facility was near, but alas, on the low side of being adequate for the dynamic testing of the latches. The overall conclusions of the latch testing were as follows:

1. The cause of the latch failures during sled testing has been accurately identified.
2. A very minor design change has been demonstrated to correct the original problem of keeper/latch geometry.

Conclusions

Engineering tests on the Independent Locking Securement System have been conducted to determine its performance in both ordinary and extraordinary conditions. Specifically, two questions were answered: (1) How much motion of the mobility aid is allowed by the securement system under normal operating conditions, and (2) does the securement system have the required strength to prevent unwanted movement of a mobility aid during crash conditions?

The field tests conducted in a mass transit vehicle indicate clearly that for normal operations and even for extraordinary actions by a driver, the motion of a mobility aid secured by this system will be very small. No measurable movement (in any direction) occurred during normal operations. During maximum braking and turning efforts, there was motion of less than one inch by the mobility aids and that only occurred with the scooter. It can therefore be concluded that this securement device will be in compliance with the normal operation motion limits for secured mobility aids as specified by the ADA.

The strength tests consisted of static tests and dynamic (sled) tests. Based on the static testing, the securement system meets all requirements for strength as specified by the ADA. In addition, sled tests conducted with a 50th percentile male dummy and a deceleration from 20 MPH at a rate of 10 G indicates that the securement system allows only about one inch of motion for mobility aids and that any damage resulting to the mobility aids stems from the occupant and/or inadequate battery case structures, not from the securement system.

However, the dynamic testing done at 30 MPH and 20 G revealed a subtle problem with the latch mechanism as installed in the prototypes. Subsequent testing of the latch mechanism has confirmed the exact nature of the problem and the latch mechanism has been redesigned to eliminate the problem. Although this redesigned latch has not been sled tested, we are confident that new prototypes will have no difficulty performing as well at 30 MPH and 20 G as they did at the lower energy levels.

To summarize, the engineering tests have shown that:

1. The securement system as designed does meet all strength and motion limit requirements specified by the ADA.
2. They have shown the value of including dynamic tests even though they are not required by the ADA.
3. They have identified some opportunities for improvement in the ADA criteria for movement of mobility aids, criteria for static strength, and criteria for demonstrating overall securement effectiveness.

CHAPTER 5 — SUMMARY

Introduction

This chapter summarizes the conclusions and recommendation from both volumes of the project final report. A brief description of the future direction of the project is also included.

Volume 1 Conclusions

Volume 1 report discussed the application of the QFD method for the development of the ILS System. The QFD method permitted the design team to approach an ill defined and complex design problem systematically and orderly. The QFD method forced the designers to clearly define the "Customer" and this is the first step in understanding the problem. In this particular application of the QFD method the "Customer" was represented by an Advisory Committee. The Advisory Committee provided strong direction and guidance for the project at a number of important stages of the problem definition phase. Initially, the advisory committee assisted with the development of the matrix, specifically the development of all the customer requirements. The advisory committee also assisted with establishing the design priorities and the calibration of the matrix.

There were no changes in the design concept since its inception, however there have been many design refinements. The advisory committee's input strongly directed the design of the securement system. The resulting design is sensitive to the requirements of all the "Customers" and more important, it has been widely accepted by the "Customers".

Volume 1 Recommendations

The application of the QFD method to the development of the ILS System has shown both the potential and power of this design process. The QFD method forces the designers to fully understand the problem before development of design concepts begins, and it also promotes the development of a body of design knowledge that can be used by others approaching the same or similar design problems. The QFD method insures that the needs of the customer are integrated into the design. The OSU design team is also using the QFD method to develop a passenger restraint system that will be used with the OSU securement system.

Volume 2 Conclusions

The results of the human factors tests were generally positive and encouraging. The subjects felt that the securement system is safe and easy to use. They were particularly impressed by the independence that the system offered them in securing and releasing their mobility-aids without any assistance. The built-in capability of the capture system to compensate for users' misalignment in backing their mobility-aids proved to be a major source of users' acceptance of the system.

The engineering tests have shown that:

1. The securement system as designed does meet all strength and motion limit requirements specified by the ADA.
2. They have shown the value of including dynamic tests even though they are not required by the ADA.
3. They have identified some opportunities for improvement in the ADA criteria for movement of mobility aids, criteria for static strength, and criteria for demonstrating overall securement effectiveness.

Volume 2 Recommendations

The human factors tests have been very successful. The objectives of the tests were achieved with the limited number of subjects who participated. However, as the securement system is refined and prepared for full scale field testing, more rigorous human factors tests will be required. These tests should include a larger number and a greater variety of subjects.

It is recommended that improvements be made in the ADA criteria for movement of mobility aids, criteria for static strength, and criteria for demonstrating overall securement effectiveness.

Future Directions

Oregon State University has applied for a patent on the ILS System concept, and is currently negotiating with a company to manufacturer and market the technology. As part of that process, extensive field tests and demonstrations of the production model of the securement system will be undertaken and underwritten by the manufacturer. Oregon State University is also completing the design of a passenger restraint system. The development of the restraint system was sponsored by the U.S. Department of Transportation Federal Transit Administration University Research and Training Program and documentation of the Restraint project will be produced in 1993.

CHAPTER 6 — REFERENCES

An extensive resource library was developed to support the research necessary for the QFD method. The resource materials were organized into a reference base, and a brief summary of each item was incorporated into the reference base. The reference base is included in Appendix A of Volume 1 of the final report. It is organized into: Reports (general), Technical Literature (general), Unpublished Reports, Standards, Crash Tests, Devices, Videos, and Vendor References. The Vendor References are further organized into: Securement Systems, Mobility Aids, Cushions, Lifts, Bus Seating, and Other. The references listed below pertain directly to the preparation of this report.

1. Ullman, D.G. *The Mechanical Design Process*, McGraw Hill, New York, 1992,
2. Hauser, J.R. and Clausing, D., "The House of Quality," *Harvard Business Review*, May/June 1988, pp. 63-73.
3. CSA Standards Z605 (draft), "Mobility Aid Securement and Occupant Restraint (MASOR) Systems for Motor Vehicles," Canadian Standards Association, Rexdale, Ontario, Canada, April 1991.
4. Architectural and Transportation Barriers Compliance Board (ATBCB), "American with Disabilities Act (ADA) Accessibility Guidelines for Transportation Vehicles," 36 CFR Part 1192, *Federal Register* Vol. 56, No. 173, September 6, 1991.
5. B.C. Transit, "BC Transit Barrier Crash Tests of 3-Wheeled Scooters and Wheelchairs in Paratransit Vans," Final Report, May 1990.
6. Booz, Allen Applied Research, "Bus Interior Design for Improving Safety," Transbus Document TR 76-001, U.S. DOT, Urban Mass Transportation Administration, Washington, DC, 1976.
7. Fowkes, M. and Smoczynskiz, J., "The Restraint of Wheelchairs and Wheelchair Occupants on Public Transportation," The Motor Industry Research Association, Nuneaton, England, 1987.
8. Hunter-Zaworski, K.M., "Securement of Non Traditional Wheelchairs on Public Transit Vehicles," Final report for TRANSNOW, Seattle, WA, September 1990.
9. Hunter-Zaworski, K. M., "The Status of Wheelchair Occupant Restraint Standards for Motor Vehicles: Transportable Devices," Transportation Research Board Annual Meeting, Washington, DC, January 1990.
10. Layton, R., Hunter. K., and Safford, R., "A Study of Human Factors in Public Transportation Safety," Final Report, U.S. Department of Transportation, Urban Mass Transportation Administration, Washington, DC, March 1989.
11. "National Workshop of Bus-Wheelchair Accessibility," Guideline Specifications for Active Wheelchair Lifts, Passive Wheelchair Lifts, Wheelchair Ramps, Wheelchair Securement Devices", Office of Technical Assistance, Office of Bus and Paratransit Systems, USDOT, Urban Mass Transportation Administration, May 7-9, 1986.

12. Project ACTION, *Reconnaissance Survey of Selected Transit Agencies*, Washington, D.C., June 1990.

13. Project ACTION, *Combined Research Results*, Washington, DC, June 1990.

14. RESNA/ANSI Wheelchair Standards Draft of, "Guidelines for Application of Wheelchair Standards (ISO/7176)," Revised May 1988, RESNA, Washington, DC.

15. Standards Association of Australia, "Wheelchair Occupant Restraint Assemblies for Motor Vehicles," AS 2942-1987, North Sydney, 1987.

16. Todd, Sheldon P., Ed., "Choosing a Wheelchair System," *Journal of Rehabilitation Research and Development*-Clinical Supplement No. 2, Department of Veterans Affairs, March 1990.

17. NASA (1978), *Anthropometric Source Book*, 3 vols., (NASA Reference Publication 1024). Houston, TX, NASA.

18. Croney, John, *Anthropometry for Designers*, Van Nostrand Reinhold Company, New York, 1981.

19. SAE J992, Mar 85, Brake System Performance Requirements - Truck, Bus and Combination Vehicles

20. Mercer W. And J. Billing "Assessment of a Transportable Mobility Aid in Severe Driving Conditions - An exploratory Test", Report CV-90-03, The Vehicle Technology Office, Ministry of Transportation of Ontario, December 1990.

21. Edwards, Amelia. "Handicapped Accessible Public Transportation: Mobility Device Lifts and Restraints", Masters Project Report, Civil Engineering Department, Oregon State University, June 1991.

APPENDICES

A. HUMAN FACTORS TESTS PROTOCOL

B. HUMAN FACTORS TEST QUESTIONNAIRE

C. ENGINEERING SLED TESTS RESULTS

D. SIDE LOAD TESTING

APPENDIX A

Proposed Human Factors Tests Protocol

A. GOALS OF TESTING

General:

1. Evaluate the securement system while in use under normal operations
2. Compare system performance to both the customer and engineering requirements
3. Evaluate system use by mobility-aid users
4. Evaluate system acceptance by transit operator
5. Evaluate system acceptance by maintenance operator

Specific:

1. Develop an operation instruction sheet to be used by mobility-aid passengers to disconnect mobility-aid from the latching mechanism. Then determine the mean and the standard deviation of the required mobility-aid passenger training timed
2. Develop a training session for the transit operator about system's safety and operation. Then determine the mean and the standard deviation of required transit operator training time
3. Determine number of steps required to secure mobility-aid
4. Determine number of steps required to disconnect mobility-aid
5. Determine number of hands required to disconnect mobility-aid
6. Determine lateral position accuracy of mobility-aid
7. Determine angular alignment accuracy of mobility-aid
8. Determine maximum securement time for mobility-aid passenger
    Start point: the moment mobility-aid user gets on the bus and starts backing toward securement system
    Break point: the moment the light indicator of the release mechanism of the securement System turns on indicating mobility-aid secured
9. Determine the percentage of mobility-aid passengers that like latching mechanism system sturdiness
10. Determine the level of transit operator interaction with mobility-aid passenger
11. Determine maximum longitudinal motion of mobility-aid during normal operation conditions
12. Determine maximum lateral motion of mobility-aid during normal operation conditions
13. Determine maximum rotation of mobility-aid relative to floor during normal operating conditions

B. DESCRIPTION OF THE SYSTEM

1. Securement system
    a. Latching mechanism
    b. Interface unit (IU)
    c. Release mechanism — to disconnect mobility-aid from the hold-down unit
    d. Floor markings - 4 guide lines

2. Tasks for which human performance data will be collected
    a. Backing of mobility-aid to securement system
    b. Engaging of mobility-aid
    c. Disengaging of mobility-aid
    d. Interaction of transit operator and mobility-aid passenger

3. Potential mobility-aids to be used in securement system tests
    a. Standard wheelchair
    b. Powered wheelchair
    c. Power base wheelchair
    d. Scooter

C. DATA COLLECTION

1. Personnel
    a. Two people. The human factors engineer and an assistant.

2. Data collection forms
    a. Subject Information Form
    b. Record of Informed Consent
    c. Instruction sheet
    d. Other forms to be developed for testing purpose

3. Data collection procedure
    1. Subjects were introduced to the testing team, which is made up of the human factors engineer and another team member as an assistant
    2. Subjects completed a subject information sheet
    3. The purpose of the tests was explained to the subject
    4. The subject read and signed the Record of Informed Consent
    5. The design and the method of using the securement system was explained to the subject
    6. Any questions or concerns that the subject might have had were answered by the testing team
    7. The subjects were asked to read and understand the instructions sheet
    8. The subjects were asked permission to videotape the test session
    9. The video recorder was activated
    10. The subjects were asked to back their mobility-aids into the latching mechanism
    11. Once the mobility-aid was in position, the occupant simply backed in and was locked down
    12. A system of feedback lights was used so that the individual would know when the mobility-aid had been correctly secured
    13. If the mobility-aid was not correctly secured, the mobility-aid passenger simply pressed a manual switch to release the latching mechanism and tried again
    14. Data collection forms were used to check off important mobility-aid passenger actions
    15. Lateral and angular accuracy of the mobility-aid were measured using a "grid system" specifically developed for these tests to measure lateral and angular accuracy of latching mechanism.
    16. Once step 15 was completed, the mobility-aid passenger released his or her mobility-aid from the latching mechanism and drove out of the securement station.
    17. The video recorder was turned off at the end of the watch
    18. Steps 9 to 16 were repeated about 10 to 12 times for each subject.
    19. The subject was interviewed and was asked for his or her input
    20. The subject completed a questionnaire
    21. The data forms relevant to each subject were assembled and filed

D. SUBJECTS

Due to the interface unit (IU) requirement, only selected mobility-aid users will participate in the tests. There are approximately 8 potential subjects. The subjects will be regular mobility-aid users with varying physical disabilities.

E. DATA ANALYSIS

a. Will mostly be descriptive (ex. mean, standard deviation etc).
b. Motion and time studies will be used to analyze the video recording.
c. Questionnaires and interviews will be used to qualitatively evaluate the system.

F. MEASUREMENT METHODS

Specific Goal Number	Method of Measurement
1	An operating instruction sheet will be developed. Interviews and observations will determine if any training time is actually needed.
2	A training session on system's safety and operation will be developed for transit operators. Target time for training is 20 minutes.
3	Observation
4	Observation/motion study
5	Observation/motion study
6	"grid system"
7	"grid system"
8	Time and motion study
9	Interviews/Rating scale
10	Motion study/Interviews
11	Observation
12	Motion study/observations
13	Motion study/observations
14	Motion study/observations

G. TESTING SCHEDULE

Test	Location	Start Date	End Date
Pilot Field Testing	OSU	October	November
Field Testing	Eugene	November	December

RECORD OF INFORMED CONSENT

Part 46, Subtitle A to Title 45 of the Code of Federal Regulations relating to the Protection of Human Subjects in research requires your informed consent for participation in Universal Securement/Restraint System for Mobility Aids on Public Transportation studies. Section 46.103(c) gives the following definition: "Informed consent means the knowing consent of an individual or his legal authorized representative, so situated as to be able to exercise free legal power of choice, without undue inducement to any element of force, fraud, deceit, duress, or other form of constraint." Your participation as a subject in a study to evaluate the Universal Securement/Restraint System is requested. Please consider the following elements of information in reaching your decision whether or not to consent.

1. You will be asked for biographical information necessary to the study. All information provided is confidential and the source of information will not be disclosed to the public.
2. You will use a mobility-aid equipped with an interface unit at its back. You will be asked to back the mobility-aid into the securement system. The securement system will engage and secure the mobility-aid. Written posted instructions will explain how to disengage the securement system and release the mobility-aid.
3. The test session will be videotaped for further analysis. A human factors engineer will be watching you and recording pertinent information.
4. You will be interviewed after the test session and/or given a questionnaire form to answer.
5. The test session might be repeated and each session will last about 30 minutes. You will not be subjected to any risks.
6. You are free to ask questions at any time during the test and you will always be accompanied by the human factors engineer or his assistant.

The basic elements of information have been presented and understood by me, and I consent to participate as a subject.

NAME: ______________________________ (Please Print)

SIGNATURE: ______________________________

DATE: ____________________

SUBJECT INFORMATION SHEET

Subject Name: ____________________________________

Subject Address

Street: ____________________________________

City: ___________ State: ________ Zip: _________

Telephone: ( ) ___________

Age (Optional): _______

Sex: _______

Number of Years Using Mobility-Aid: ____________

Mobility-Aid Used:
- Standard Wheelchair: _______
- Powered Wheelchair: _______
- Power Base Wheelchair: _______
- Scooter: _______

Functional Classification of Subject:
- Walker: ______
- Para 1: ______
- Para 2: ______
- Quad 1: ______
- Quad 2: ______
- Quad 3: ______

Special Characteristics of Subject:

____

____

____

APPENDIX B

Mobility-Aid Passenger Questionnaire

Test Location:

Subject Name:

Subject Number:

Mobility-Aid Type:

Purpose

The purpose of this questionnaire is to determine your opinion about several aspects of the securement system. The information that you provide will be used for the securement system evaluation and improvement.

Instructions

Please answer the following questions to the best of your ability. Check the appropriate answer as follows.

e.g. The securement system appears to be sturdy
_____ Yes
_____ No

Whenever appropriate, please write your comments or explanation of responses in the space provided below each question.

A. Ease of Use

1. The securement system was easy to use

______ Strongly agree
______ Agree
______ Neutral
______ Does not agree
______ Strongly disagree

Comments: ______________________________

____

____

2. I was able to use the securement system

______ Very easily
______ Easily
______ Not easily
______ Very uneasily

Comments: ______________________________

____

____

3. I was able to release the securement system

_____ Very easily
_____ Easily
_____ Not easily
_____ Very uneasily

Comments: ______________________________

____

____

B. Securement System Sturdiness

1. The securement system appears to be sturdy

_____ Strongly agree
_____ Agree
_____ Neutral
_____ Does not agree
_____ Strongly disagree

Comments: ______________________________

____

____

2. The Interface Unit appears to be sturdy

_____ Strongly agree
_____ Agree
_____ Neutral
_____ Does not agree
_____ Strongly disagree

Comments: ______________________________

____

____

C. Instruction Sheet

1. The instruction sheet is easy to understand and follow

_____ Strongly agree
_____ Agree
_____ Neutral
_____ Does not agree
_____ Strongly disagree

Comments: ____

____

____

2. The instruction sheet needs more

_____ Symbols
_____ Detail instructions
_____ Does not need any changes

Comments: ____

____

____

D. The Release Mechanism

1. The release switch is within my hand reach

_____ Agree
_____ Does not agree

Comments: ____

____

____

2. The release switch requires ________ to activate

_____ tremendous force
_____ a lot of force
_____ little force
_____ negligible force

Comments: ____

____

____

3. The green light of the release mechanism means that

______ The mobility-aid is secured
______ The mobility-aid is not secured

Comments: ____

____

____

4. The light indicator is suitably positioned within my range of sight

______ Strongly agree
______ Agree
______ Does not agree
______ Strongly disagree

Comments: ____

____

____

5. I ______ problems seeing the green light

______ have
______ does not have any

Comments: ____

____

____

6. I will prefer a ________

______ red color
______ blue color
______ yellow color
______ No change (Green is ok.)

Comments: ____

____

____

E. The Guiding Strips

1. Following the guiding strips was easy for me

_____ Strongly agree
_____ Agree
_____ Does not agree
_____ Strongly disagree

Comments: ____

____

____

2. I had to exert ______ to follow the guiding strips

_____ tremendous effort
_____ a lot of effort
_____ little effort
_____ negligible effort
_____ no effort

Comments: ____

____

____

3. I had to ________ to follow the guiding strips

_____ concentrate 100%
_____ concentrate 75%
_____ concentrate 50%
_____ concentrate 25%
_____ concentrate less than 25%

Comments: ____

____

____

4. The width of the guiding strips is

______ Too narrow
______ Too wide
______ Acceptable as used

Comments: ______________________________

____

____

5. The guiding strips are clearly visible

______ Strongly agree
______ Agree
______ Does not agree
______ Strongly disagree

Comments: ______________________________

____

____

F. Floor Texture

1. The floor near the securement system is too slippery

______ Strongly agree
______ Agree
______ Does not agree
______ Strongly disagree

Comments: ______________________________

____

____

G. Seat Belt

1. The securement system does not interfere with my seat belt

______ Strongly agree
______ Agree
______ Does not agree
______ Strongly disagree

Comments: ______________________________

____

____

H. Safety

1. The securement system is safe to use

______ Strongly agree
______ Agree
______ Does not agree
______ Strongly disagree
______ Not sure

Comments: ______________________________________

____

____

2. Compared to other securement systems, this system is

______ much more safer
______ a little bit safer
______ of equal safety
______ not safer
______ can not tell

Comments: ______________________________________

____

____

I. General

1. All in all, I ______

______ like the system quite a bit
______ like the system fairly well
______ am indifferent about the system
______ dislike the system
______ dislike the system very much

Comments: ______________________________________

____

____

The following are open ended questions about the securement system. Please answer them to the best of your ability. We welcome your suggestions and comments about the system or this questionnaire.

1. What are some of the difficulties you experienced in using this system?

2. What are some of the "likes" about this system?

3. What are some of the "dislikes" about this system?

4. Additional Suggestions and Comments!

APPENDIX C

Sled Testing

DYNAMIC SLED TEST RESULTS

Test Methods

The impact tests were conducted at the University of Michigan Transportation Research Institute impact sled. The sled operates on the rebound principle, achieving the desired velocity by reversing the direction of motion during the impact event. The sled crash pulse is trapezoidal in shape and is reported as an average deceleration level in G's. The sled velocity is monitored immediately before and after impact. A 50th percentile male crash dummy weighing 168 lb was used to represent the size and weight of a typical average male occupant. GSE seat belt load cells were used to measure webbing tension in the restraint belts where possible and appropriate.

Data generated during the test were multiplexed and recorded on the direct record channels of Honeywell Model 96 magnetic tape recorder. The signals were subsequently demultiplexed and time-expanded for digitizing, filtering and analysis on a 386 computer. All signals were filtered to the requirements of SAE J-211.

The photo-instrumentation consisted of high speed (1000 frames/sec) 16 mm motion picture camera for side, rear, and overhead views of the impact event. A Polaroid graph-check camera was also used to provide a quick look sequenced photograph of the impact event. The transducer data and the motion picture test films were simultaneously marked by a timing pulse generated at ten millisecond intervals. A strobe flash recorded the onset of impact.

Test # OR9201

Sled Test Setup

Test #	OR 9201
Test Date	March 25, 1992
Sponsor	Oregon State University
Wheelchair Type	Mobie Scooter
Wheelchair Restraint	Independent Locking Securement System
Test Dummy	50th %ile male weighing 168 lbs
Occupant Restraint	Tie-Tech Lap Belt
Orientation	Forward Facing
Sled Platform	Steel Plate
Desired Crash Pulse	20 MPH ΔV
Desired Sled Deceleration	10 G's

The Independent Locking Securement System was mounted to the sled platform and used to restrain a Mobie Scooter weighing 126 lbs. The Mobie scooter was fitted with a three point interface assembly with vertical steel bars that mate with the capture mechanism on each side. The scooter was loaded with the 50th percentile male dummy that was restrained by a Tie -Tech lap belt. The entire assembly was tested at 20 MPH and 10 G to determine the vehicle-anchored response and effectiveness of the securement system to this kind of impact.

Sled Test Results

Test #	OR 9201
Actual velocity differential	21.3 MPH ΔV
Actual sled average deceleration level	10.1 G's
Crash Pulse Duration	110.6 msec
Peak force left lap belt	790.4 lb
Peak force right lap belt	787.2 lb
Peak resultant chest acceleration	44.4 G
Peak resultant head acceleration	63.8 G
Head injury criteria	444.1
Peak forward wheelchair excursion	0.6 in
Peak forward head excursion	34.5 in.
Peak forward knee excursion	9.5 in.

The Independent Locking Securement system sustained impact loading intact and limited the scooter to 0.6 inches of forward excursion. The dummy was effectively restrained by the lap belt but experienced approximately 34.5 inches of forward head excursion due to the lack of upper torso restraint and 9.5 inches of forward knee excursion. Post-test inspection of the hardware revealed moderate deformation of the mobility aid.

Post test examination showed no apparent damage to either the securement system or the interface unit. Even the D-rings showed no sign of having been stressed whatsoever: no deflection and no marks that on them that could be attributed to the test. The Mobie II, on the other hand, suffered a bend in the frame at the point where the seat post, rear axles, and floorboard support members come together, a bend in the tiller (presumably due to impact of the dummy's head on the control mechanism), and slippage of the front wheel in it's chain tension adjustment slot. Also, the batteries had clearly moved as the wire frame on the top of the battery cases was bent.

The bend in the frame resulted in the D-rings being canted in the securement system at an angle of about 20 degrees with the bottom of the rings towards the back of the securement system and the top towards the front. The securement system would not release with the D-rings canted but as soon as the front of the Mobie II was lifted to put the rear back in its normal orientation, the mechanism released normally.

Examination of the post test Polaroid sequences shows clearly that the securement system was rigid relative to the restraint system. This means that no loads were imparted to the dummy due to movement of the Mobie II into the dummy.

Although it was clear that the Mobie II had suffered some damage in the test, it was decided that it would be acceptable to re-use it for a second test. The frame and tiller were bent back to nearly their original shape and the front wheel chain was re-tensioned and those bolts tightened. In this condition the Mobie II seemed to still be operable; wheels were all straight, the steering worked, and it didn't feel different to sit on it.

Test # OR9202

Sled Test Setup

Test #	OR 9202
Test Date	March 26, 1992
Sponsor	Oregon State University
Wheelchair Type	Mobie Scooter
Wheelchair Restraint	Independent Locking Securement System
Orientation	Forward Facing
Sled Platform	Steel Plate
Desired Crash pulse	30 MPH ΔV
Desired Sled Deceleration	20 G's

The straightened out Mobie II was installed in the securement system but with no dummy. For this higher energy test, the initial velocity was 30 MPH (44 ft/sec) and deceleration was at 20 G (644 ft/sec^2). During the deceleration, the latch mechanism on the left side (facing front) released leaving all of the force on the right hand latch and interface unit. Review of the Polaroid photos indicates that the latch released almost immediately. The asymmetric loading caused the securement system to rotate past the internal stop but the system held the Mobie II in place through the entire test. The Mobie II was twisted and bent beyond any possible usefulness but it remained intact through the test; no pieces went flying.

Immediately after the post-test photos were taken the securement system was released from the remaining (badly bent) D-ring, removed from the test sled, and disassembled. The observations made were as follows:

1. During the test, the left hand latch released but the right hand latch held.
2. There was significant deformation in the interface unit including one broken weld and the Mobie is not useable any more.

3. The rotation limit stop was broken off of the center post. The bolt did not shear. It appears that the weld on the stop did not penetrate very deeply at all and that is why the failure occurred.
4. The release cable broke at both ends near the brass pieces with the set screws. It appears that both cables pulled out of the brass pieces but that a few strands actually broke. The left hand side is no different that the right hand side as far as the cables go.
5. The keeper spring had come out from behind the roll pin that was used to keep the keeper sprung so that it would not release.
6. There is no apparent damage to the left hand side of the securement unit. It appears to be functional.
7. When the test was finished, the keeper on the left hand latch was not in the latched position; it was free and up against the outer limit stop roll pin. This indicated that if an interface unit were backed in the unit would not latch.
8. The left side bash plates, screws, and pins all appear to be in perfectly fine shape.
9. On the right-hand side (the side the did hold the Mobie II), the outside bash plate is bent but both screws are still in place. There is no sign of any other kind of deformation.
10. The right-hand keeper spring is still in place.
11. The latch springs on both sides were still in place; neither of the latch springs came loose.
12. In the center of the securement system, the solenoid and manual release mechanism all appear normal.
13. On the right-hand side, the bash plate was bent and there are marks at the top and the bottom where the D-ring was bent around it. On the bottom-half of the bash plate, there's a strange sort of a spider web pattern emanating from one of the screws. There's also one dent where the color of the material has changed to blue as if it had been heated.
14. On the left hand outboard bash plate one of the screws has become loose. It was checked and found to be tight before the first test. It was not checked between tests.

Test # OR9203

Sled Test Setup

Test #	OR 9203
Test Date	March 26, 1992

Sponsor	Oregon State University
Wheelchair Type	Fortress Power Base
Wheelchair Restraint	Independent Locking Securement System
Test Dummy	50th %ile male weighing 168 lbs
Occupant Restraint	Tie-Tech Lap Belt
Orientation	Forward Facing
Sled Platform	Steel Plate
Desired Crash pulse	20 MPH ΔV
Desired Sled Deceleration	10 G's

The Independent Locking Securement System was mounted to the sled platform and used to restrain a Fortress Scientific model 655 FS power base mobility aid weighing 200 lbs. The Fortress power base was fitted with a three point interface assembly with vertical steel bars that mate with the capture mechanism on each side. The power base was loaded with the 50th -percentile male dummy that was restrained by a Tie -Tech lap belt. The entire assembly was tested at 20 MPH and 10 G to determine the vehicle-anchored response and effectiveness of the securement system to this kind of impact.

<u>Sled Test Results</u>

Test #	OR 9203
Actual velocity differential	20.9 MPH ΔV
Actual sled average deceleration level	10.1 G's
Crash Pulse Duration	107.6 msec
Peak force left lap belt	931.5 lb
Peak force right lap belt	934.4 lb
Peak resultant chest acceleration	29.5 G
Peak resultant head acceleration	110.1 G
Head injury criteria	385
Peak forward wheelchair excursion	1.6 in
Peak forward head excursion	35.7 in.
Peak forward knee excursion	9.7 in.

Immediately prior to the test, the top of the second securement system was removed to check that all of the springs were in place and that all looked normal. The interface unit equipped Fortress FS-655 powerbase was then installed in the securement system. A 50th percentile male dummy was placed in the seat and restrained by a lap belt fastened to the sled base plate. The initial velocity for this test was 20 MPH (29-1/3 ft/sec) and the deceleration was at 10 G (322 ft/sec^2).

The Independent Locking Securement system sustained impact loading intact and limited the scooter to 1.6 inches of forward excursion. The dummy was effectively restrained by the lap belt but experienced approximately 35.7 inches of forward head excursion due to the lack of upper torso restraint and 9.7 inches of forward knee excursion. Post-test inspection of the hardware revealed severe deformation of the securement system components but the mobility aid was still effectively secured to the platform. Post test examination showed no apparent damage to the securement system or the D-rings. The interface unit, however, had bent at an angle of about 30 degrees from horizontal at the point where the transition from a horizontal member to a vertical member begins. It appeared that the upward bending of the interface unit stopped when it hit the powerbase bumper. We also noted that the material was blue colored in the location of the bend. Except for apparent movement of the batteries, the powerbase showed no signs of having been through any kind of crash. As with the bent Mobie II interface unit, the securement system would not release with the D-rings canted but as soon as the front of the powerbase was lifted to put the rear back in its normal orientation, the mechanism released normally.

Examination of the post test Polaroid sequences shows clearly that the securement system was rigid relative to the restraint system. This means that no loads were imparted to the dummy due to movement of the powerbase into the dummy.

Although it was clear that the interface unit had suffered some damage in the test (it had been bent), it was decided that it would be acceptable to re-use it for a second test. The interface unit was bent back to its original shape and then heated to relieve any internal stresses that resulted from the bending. In addition, small spacers were welded to the top of the interface unit so that there was no longer a gap between the interface unit and the bumper. This was done in hopes that it would help with the bending problem in the second test.

Test # OR9204

Sled Test Setup

Test #	OR 9204
Test Date	March 26, 1992
Sponsor	Oregon State University
Wheelchair Type	Fortress Power Base
Wheelchair Restraint	Independent Locking Securement System
Orientation	Forward Facing
Sled Platform	Steel Plate
Desired Crash pulse	30 MPH ΔV
Desired Sled Deceleration	20 G's

Immediately prior to this test, the top of the securement system was again removed to check that all of the springs were still in place and that all looked normal. The powerbase was re-installed in the securement system but with no dummy. For this higher energy test, the initial velocity was 30 MPH (44 ft/sec) and deceleration was at 20 G (644 ft/sec^2).

During the deceleration, the latch mechanism on the right side (facing front) released leaving all of the force on the left hand latch and interface unit. Although the latch mechanism held, the interface unit horizontal plate holding the left hand D-ring ripped almost immediately allowing the powerbase to go flying into the front wall of the sled. Review of the Polaroid photos indicates that the right latch released almost immediately on impact. As in the Mobie II test, the asymmetric loading caused the securement system to rotate past the internal stop. After the test, the left D-ring was found down the track from the sled.

Numerous photos were taken and then the top was removed for observation. The following observations were made:

1. During the test, the right hand latch released but the left hand latch held. This allowed the securement system to rotate (breaking the internal rotation stop).
2. At some point, the left interface unit tore across the horizontal plate at the point where it had bent in the previous test.
3. The various securement system springs all appear to still be in place.
4. The left release cable is broken. The break happened somewhere near the top of the securement system, not near the turnbuckle.
5. There is some deformation on the top plate of the securement system at the center where screws enter from the side plate. This deformation is definitely a result of this test; as a result of seeing this type of deformation on the Mobie II securement system, the pre-test inspection for this unit included a specific check of this are on the top plate.
6. The securement system, at the end of the test, was found to have both latch mechanisms in the unlatched position.
7. The stop that was stressed did not break but was bent to the point that the bolt could slide by it.
8. Time did not allow as extensive a review of the internals as was done for the Mobie II high load test (the UMTRI crew had to set up right away for another test).

APPENDIX D

SIDE SLIP TESTS FOR MOBILITY AIDS

Abstract:

Mobility aid securement system designers need to understand the dynamics of the environment in which the securement system will operate, and how a mobility aid will react to the forces imposed by the environment. The reaction of mobility aids to side loads is important design information. Designers need to understand what type of motion occurs when mobility aids are subject to side loads, in order to design securement systems that restrict this motion.

Tests were performed using a tilting surface, to help understand a mobility aid's reaction to side loads while stationary, . Several types of mobility aids were tested on varying surfaces. Both the angle to cause any motion and the angle to cause the mobility aid to move without stopping were of interest. The nature of this motion was also observed. The results of this research can be applied to mobility aid securement system design.

Introduction:

Current legislation has required that mobility aid users be granted access to public transportation vehicles. While the transit vehicle is in motion, forces will occur on the mobility aid, making it necessary for mobility aid passengers to have their mobility aids secured to the vehicle. It is necessary to understand how the mobility aids behave when side loads (accelerations) are applied in order to design a device that will secure mobility aids. The behavior of the mobility aids as a result of the application of these forces indicates what type of motion must be restricted by the securement system.

With a focus on securement system design, the goals of this testing were:

- to determine how different types of mobility aids behave when side loads are applied.
- to determine the effect of flooring surface on mobility aid stability during side loads.
- to determine the effect of wet and dry surfaces on mobility aid stability during side loads.

- to examine how the results compare with the ADA guidelines and other standards.

The investigation included the use of a tilting platform to simulate the side acceleration that a mobility aid experiences while on a moving vehicle. A number of types of mobility aids were tested on three different surfaces. The tests were performed with the mobility aids as they would be expected to be found on a vehicle.

Theory:

The most obvious way to study mobility aid motion on a vehicle is to equip a vehicle and observe. But a moving vehicle is not a controlled environment. To eliminate the variables that are inherent in a human-driven vehicle, a large centrifuge could be used. Because a centrifuge would be prohibitively expensive for these tests, they were carried out on a tilting platform. The platform simulates actual accelerations, but it does not replicate them exactly.

Side acceleration from cornering can cause the mobility aid to move in two ways, tipping and sliding. These two cases will be independently studied. The tipping case, without sliding, is diagramed in figure 1.

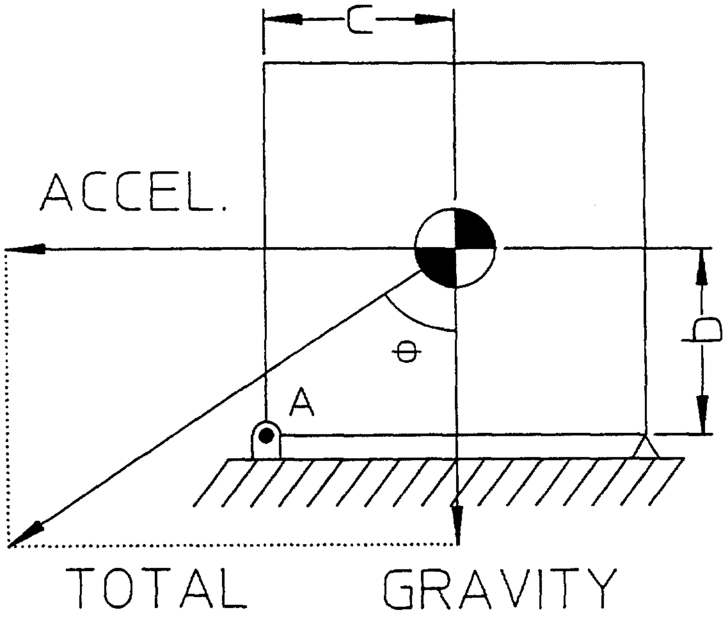

Fig. 1: Mobility aid forces to induce tipping on a moving vehicle.

In order for tipping to occur, total acceleration vector must act on a line that passes above the bottom corner of the mobility aid at A. This can be stated as:

$$\theta > \tan^{-1}(c/b) \qquad (1)$$

The case where the mobility aid slides without tipping is diagramed in figure 2.

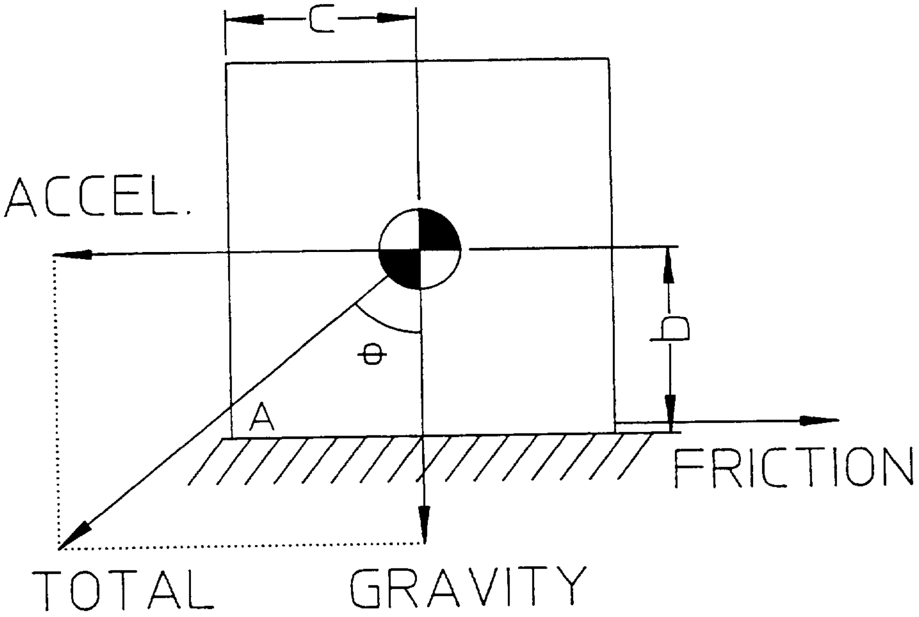

Fig. 2: Mobility aid forces to induce sliding on a moving vehicle

For sliding to occur, the horizontal acceleration force must overcome the frictional force. This condition can be related to the angle of the total acceleration vector. This relation is:

$$\tan(\theta) > \mu \qquad (2)$$

when μ is the coefficient of friction between the block and the surface.

Tipping of the mobility aid without sliding, as it would occur on a tilting platform is diagrammed in figure 3.

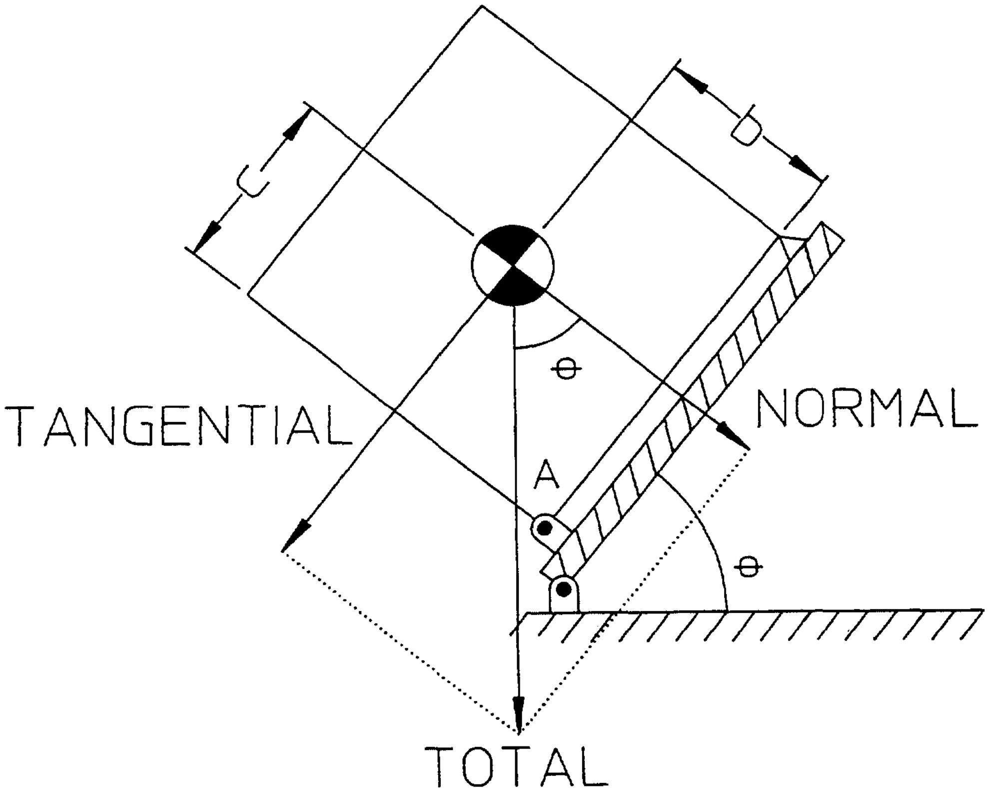

Fig. 3: Mobility aid forces to induce tipping on a tilting platform.

The conditions for tipping on the platform are the same as on the vehicle. The line of action of the total acceleration vector must rotate past the corner of the mobility aid A. The angle of the total acceleration vector with respect to the mobility aid is the same as the angle of tilt of the platform. This makes the relation that describes tipping on a platform the same as (1).

Mobility aid motion on a tilting platform due to sliding only is diagrammed in figure 4.

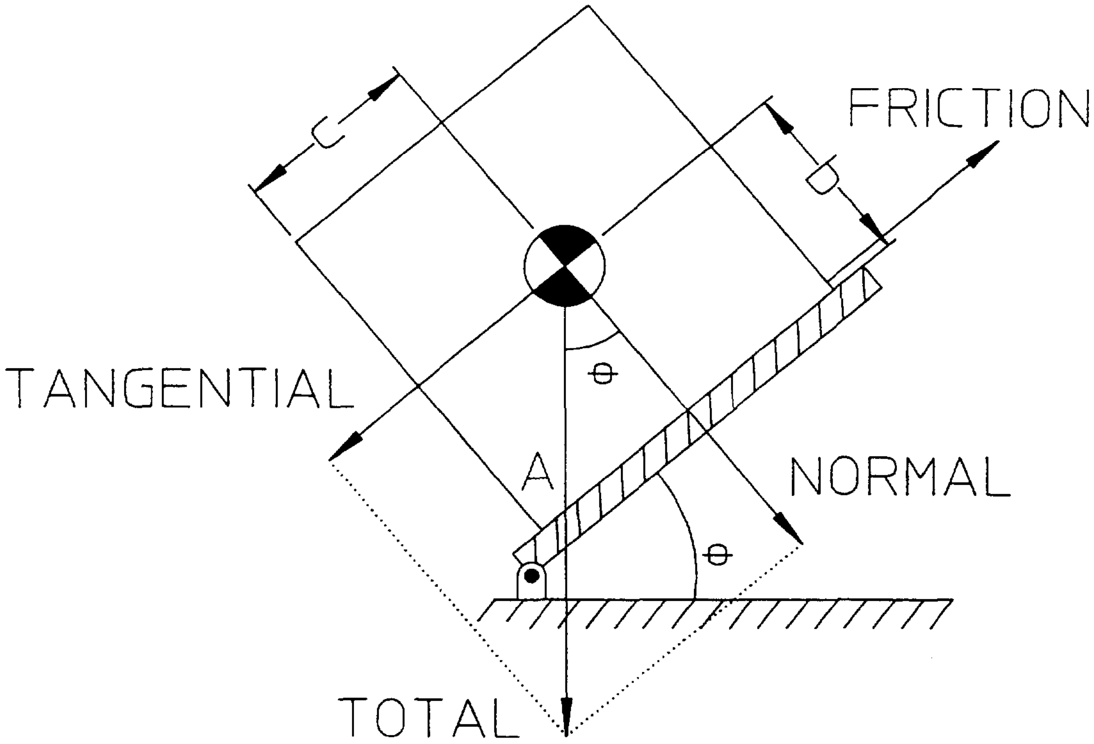

Fig. 4: Mobility aid forces to induce sliding on a tilting platform.

Again, the relation for motion on the platform is the same as for motion on the moving vehicle. This relation was stated as (2).

Although both (1) and (2) are valid for both situations, they do not consider the magnitude of the total acceleration vector. The angle of the total acceleration vector can be reproduced on a tilting platform, but there is no way to reproduce the magnitude without complex equipment. Because side acceleration is added to normal gravitational acceleration, the actual situation will have a larger total acceleration in every case except the trivial case of zero side load.

Theoretically, both tipping and sliding depend only on the direction of the total acceleration vector, not on its magnitude. Magnitude can become important when other factors are considered, like the amount of deformation of the mobility aid tires. These factors will be ignored for this analysis.

Another possible source of confusion is that because these tests were performed quasi-statically, the results do not account for dynamic conditions. In a dynamic system, the mobility aid's inertia plays a role. To illustrate this role, the sliding case can be examined in more detail. By the application of

Newton's second law to the diagram shown in fig. 2. The resulting equation for the acceleration in the x-direction is:

$$a = a_o - \mu g \qquad (3)$$

where a_o is the magnitude of the acceleration of the surface, μ is the coefficient of friction between the surface and the block, and g is the acceleration due to gravity.

Now we must separate the time of motion of the block into two periods. In the first period, from time equal to zero to time equal to t1, the block is being accelerated by the surface acceleration. At time t1, the surface acceleration stops and the block is slowed by friction. This sequence represents a bus at steady state entering a corner, turning with a constant lateral acceleration, then exiting the corner to a steady state condition. By integrating

$$vdv = ads \qquad (4)$$

with respect to velocity and position, where v is velocity, a is acceleration, and s is position, s1 can be found to be:

$$s_1 = 1/2\ (a_o - \mu g)\ t_1^2 \qquad (5)$$

Using a similar method the distance between s1 and the end of sideways motion, s2 is found to be:

$$s_2 = t_1^2 (a_o - \mu g)^2 (2\mu g)^{-1} \qquad (6)$$

The total distance traveled by the block, d, is then

$$d = s_1 + s_2 = 1/2\ (a_o^2/\mu g - a^o) t_1^2 \qquad (7)$$

The ADA guidelines limit sideways motion to two inches. Fig 5 shows how long a typical wheelchair can be accelerated at different levels and not move more than two inches. This figure does not account for the possibility of tipping.

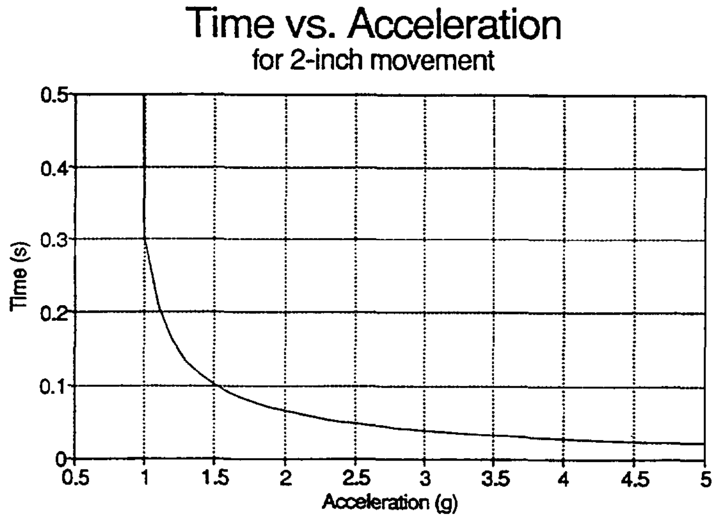

Fig 5: Acceleration versus Time for 2-inch movement

To determine the amount of time an acceleration must be held to tip a mobility aid follows a similar argument. The mobility aid will be able to withstand large accelerations for a small period of time without tipping. The analysis of this problem is much more complex, however, because the torque on the mobility aid that causes it to tip is a function of the angle of inclination. This means that angular acceleration is not constant and cannot be taken outside the integral.

Procedure:

These tests were performed using a plywood platform which could have one edge lifted with a hand operated hydraulic jack. The lower edge of the platform was allowed to roll on castors to produce a smooth tilting motion. A large protractor with a hanging needle was fixed to the platform to measure the angle of tilt. A diagram of the apparatus appears in figure 6.

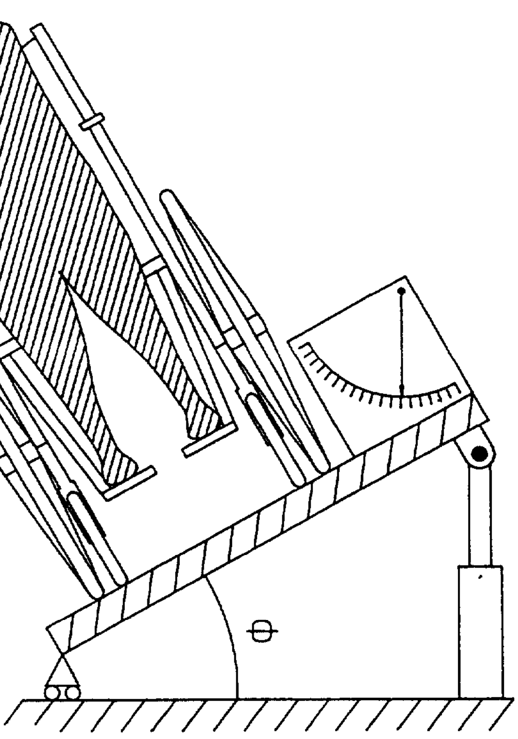

Fig. 6: Tilting table setup

To simulate side loads, the mobility aids were placed on the tilting platform while it is horizontal. One edge of the platform was raised and the resulting motion was observed. The test was concluded when either the mobility aid left the platform, or the platform reached an angle of forty-five degrees.

The tests were performed using a Fortress 2000FS (3-wheeled scooter), an Invacare Arrow (powered wheelchair), a Rolls 500 (folding manual chair), and a Fortress 655FS (power base). The tests were performed on ribbed rubber mat from a bus interior, flat rubber bus mat, and plain plywood. The tests on the rubber mats were repeated after soaking the mobility aid tires and the mat with water. Also, the Fortress 2000FS and the Rolls 500 were tested with a prototype of the Oregon State University securement system.

The protractor used to measure the angle of tilt had an accuracy of approximately plus or minus one-half degree. All tests were completed with the mobility aids as they would be expected to be on a city bus. The brakes were off, the wheels were turned straight ahead, and the motors (if any) were engaged but unpowered.

Results:

Although care was taken to make careful measurements during testing, obtaining quantitative data was not a main goal of these tests. It is more important to understand the nature of mobility aid motion than exact acceleration levels. This qualitative information is important to securement system designers so that they can make a simple securement system that will still restrict motion of the mobility aid.

In general, mobility aids with front wheels that were free to rotate (like a standard wheelchair) slid more easily down the inclined surface. The front wheels would castor, allowing the mobility aid to roll down the incline. The three wheeled scooter exhibited different behavior. Because the front wheel did not rotate to allow the scooter to roll, failure would come in either the form of tipping or sliding of all three wheels. A summary of results appears in figures 7 and 8.

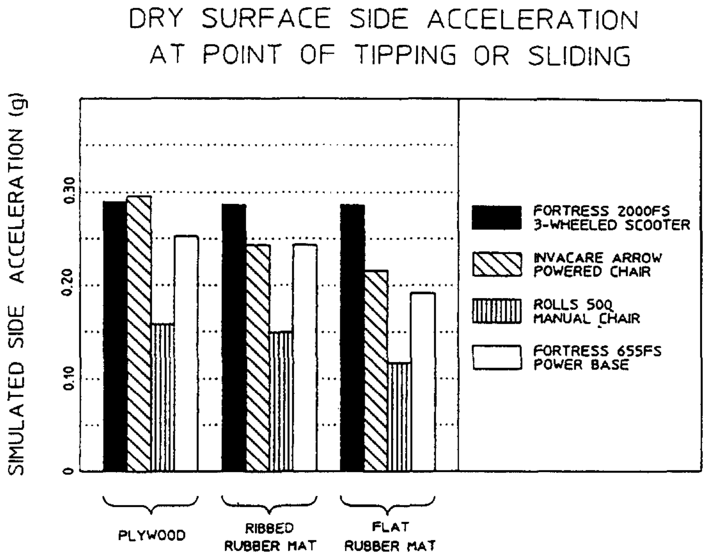

DRY SURFACE SIDE ACCELERATION
AT POINT OF TIPPING OR SLIDING

Figure 7: Dry test results

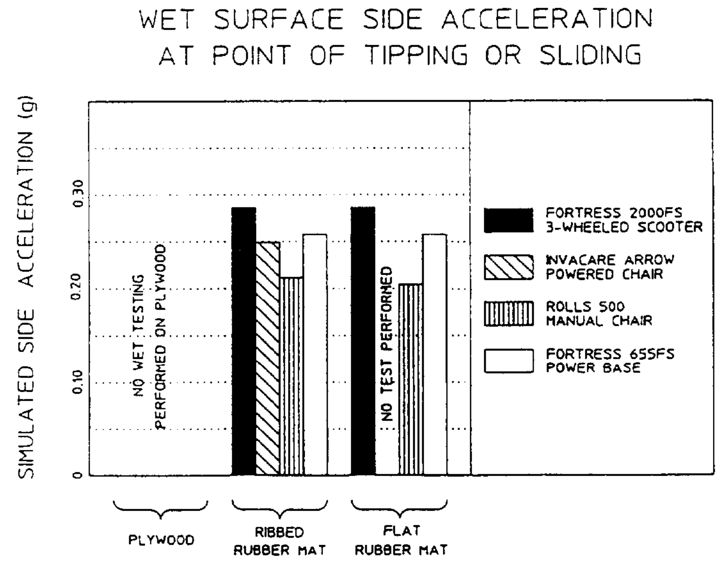

Figure 8: Wet test results

With the Oregon State University securement system in place, the mobility aids were much more stable. Because the wheelchair was not allowed to roll forward, little motion occurred until the chair slid sideways. The scooter was even more stable because tipping was controlled.

Tipping and sliding were the two different failure modes. All of the mobility aids slid on all of the surfaces except the Fortress 2000FS three wheeler, which tipped on the plywood and the ribbed rubber mat. It was not necessarily the number of wheels that made the 2000FS different, but the nature of the front wheel.

Three of the mobility aids had a similar layout. There were two wheels in the rear and two in the front. The front wheels were allowed to rotate about a vertical axis as well as roll. The rear wheels were prevented from rolling on the powered four-wheelers by engagement with the motors.

These powered mobility aids both had the same mode of failure. The front wheels would castor and slowly roll as the rear slid sideways and allowed the mobility aid to move sideways down the slope and rotate so that the front faced more toward the lower edge of the platform.

The manual chair exhibited similar motion as the powered chairs. But the rear wheels did not slide, because there was nothing to prevent them from rolling. The chair would simply turn and roll down the slope.

The front wheel on the 3-wheeled scooter was not free to rotate about a vertical axis as on the other mobility aids. This meant that it would not rotate so that the scooter could roll down the slope. In order to travel down the slope, the front wheel would have to slide. This requirement meant that there would be some extra resistance to motion that the other mobility aids did not posses. This additional resistance is the reason the scooter is consistently the most stable mobility aid tested. The three-wheeler tipped on two of the surfaces, and slid on all three wheels on the flat rubber mat.

When the surfaces were wet, the mobility aids performed in a similar manner. The scooter again tipped on both surfaces. The other mobility aids were more stable, suggesting that the rubber surfaces provide larger frictional forces when wet. This can be explained by suggesting that dust on the dry surfaces allowed the mobility aids to slide easier. The water allowed the rubber surface to stick to the rubber tires better. An example of this phenomenon is licking a suction cup to stick it to a smooth surface.

Aside from the acceleration limits being slightly higher, the motion was the same as on the dry surfaces for the larger, powered wheelchairs. The front wheels would castor and the rear wheels would slide down the incline. The only surprising fact was that the manual chair was much more stable.

The manual chair could tolerate side loads approximately thirty percent larger on the wet surfaces. Because the rear wheels of the manual chair were free to roll, the only resistance to motion this mobility aid has is the front wheels resistance to castoring. Evidently, this resistance is much greater on a wet surface.

The federal regulations state that "the securement system shall limit the movement of a occupied wheelchair of mobility aid to no more than 2 inches in any direction under normal operating conditions." This means that some motion is acceptable and that a slow slide may not result in more motion than is allowable. Also, because a small amount of motion is allowed, powered mobility aids nearly meet the standards for normal operations without a securement system.

Conclusion:

The ADA has required public transportation to be accessible to everyone, including mobility aid users. When these people use a transit vehicle, their mobility aids must be secured to the vehicle to keep them from moving. The first step in designing this type of system is understanding what type of forces need to be resisted.

To understand how mobility aids behave under sideways acceleration, conditions were simulated on a tilting platform. Several types of mobility aids were tested on three different surfaces. Both wet and dry testing was performed.

A mobility aid's reaction to side loads seemed most dependant on the type of front wheel(s) it had. Freely castoring front wheels allowed the mobility aid to roll down the inclined surface much easier than front wheels that had to be moved by the mobility aid passenger.

The surface of the platform made little difference on the type of motion encountered. The absolute limit of side acceleration did vary slightly on the different surfaces, as would be expected. The coefficient of friction changed enough on the wet surface to cause the manual chair to stay in place much better, but none of the other mobility aids saw this type of dramatic increase. It can be assumed, then, that the fixed rear wheels of the powered chairs do play a major role in resisting side forces.

If securement systems can be designed to restrict the rotating motion of a mobility aid, the rear wheels alone will prevent sliding under normal operations. Also, tipping of the mobility aid is not as large of a problem as might be expected. The tippiest of the tested mobility aids could resist nearly three-tenths of a "g" of acceleration before failure would occur.

Of course, securement systems must also be designed to resist accident-level accelerations. These accelerations must be considered separately from the normal operation accelerations. In an accident, the mobility aid passenger's comfort and the mobility aid's exact motion need not be as well defined.

☆ U. S. Government Printing Office: 1993 - 343-120 (85914)

NOTICE

DOT-T-93-08

DOT-T-93-08

TECHNOLOGY SHARING

A Program of the U.S. Department of Transportation