1. Report No.	2. Government Accession No.	3. Recipient's Catalog No.
DOT-TSC-FR-71-1A		PB-222 227

4. Title and Subtitle	5. Report Date
POWER CONDITIONING FOR HIGH SPEED TRACKED VEHICLES	January, 1973
	6. Performing Organization Code
7. Author(s) Frank L. Raposa, Thorlief Knutrud, John J. Wawzonek	8. Performing Organization Report No. DOT-TSC-FRA-72-13
9. Performing Organization Name and Address Department of Transportation Transportation Systems Center Kendall Square Cambridge, Mass. 02142	10. Work Unit No. R-2301 11. Contract or Grant No. RR-205
12. Sponsoring Agency Name and Address Federal Railroad Administration Office of Research Development & Demo. Washington, D.C. 20590	13. Type of Report and Period Covered Final Report 14. Sponsoring Agency Code

15. Supplementary Notes

16. Abstract The linear induction motor is to provide the propulsion of high-speed tracked vehicles; speed and brake control of the propulsion motor is essential for vehicle operation. The purpose of power conditioning is to provide the power matching interface between the available power and the desired power for driving the propulsion motor.

This report presents a technical survey of power conditioners that are applicable for driving the linear induction motor in the variable frequency power mode. Power conditioning systems have been selected for technical evaluation and the results are also presented in this report. These systems include the motor-alternator, naturally commutated inverter, forced commutated inverter, and the synchronous inverter-condenser power conditioners.

Reproduced by
NATIONAL TECHNICAL
INFORMATION SERVICE
U S Department of Commerce
Springfield, VA. 22151

February 1973

17. Key Words	18. Distribution Statement
Variable Frequency Power, Power Conditioning	DOCUMENT IS AVAILABLE TO THE PUBLIC THROUGH THE NATIONAL TECHNICAL INFORMATION SERVICE, SPRINGFIELD, VIRGINIA 22151.

19. Security Classif. (of this report)	20. Security Classif. (of this page)	21. No. of Pages	22. Price
Unclassified	Unclassified		

NOTICE

This document is disseminated under the sponsorship of the Department of Transportation in the interest of information exchange. The United States Government assumes no liability for its contents or use thereof.

PREFACE

The work described in this report was performed in the Power and Propulsion Branch at the Transportation Systems Center under the sponsorship of the Advanced Systems Division of the Office of Research Development and Demonstrations, Federal Railroad Administration.

The objective of this work was to identify and analytically evaluate candidate power conditioning systems capable of providing variable frequency power control to the linear induction motor. The power levels required of the power conditioners are of the order of several Mega volt-amperes.

Mr. Raposa is a member of the Mechanical Engineering Division of the Transportation Systems Center, Mr. Knutrud is with Alexander Kusko Inc., and Mr. Wawzonek is with the Bose Corporation.

Preceding page blank

TABLE OF CONTENTS

Section		Page
1.0	INTRODUCTION	1
2.0	TECHNICAL DISCUSSION PART 1 - TECHNICAL SURVEY OF POWER CONDITIONERS	3
2.1	Introduction	3
2.2	On-Board Electrical Power Sources	5
2.2.1	Open-Loop Brayton Cycle Turbo-alternator	6
2.2.2	Closed-Loop Brayton Turboalternator	6
2.2.3	Closed-Loop Rankine Cycle Turbo-alternator	8
2.2.4	Open-Loop versus Closed-Loop Turbo-alternators	8
2.3	Turboalternator Power Conditioners	10
2.3.1	Operation in the Brake Mode	11
2.4	Wayside Electric Power Sources	12
2.4.1	Solid-State Power Conditioners	12
2.4.2	Forced Commutated Inverter Power Conditioners	13
2.4.3	Circuit Descriptions	17
2.4.4	Natural Commutated Inverter Power Conditioners	23
2.4.5	Line Commutated Inverters	25
2.4.6	Cycloconverter Power Conditioners	28
2.5	Rotating Machinery Power Conditioners	32
2.5.1	Motor Alternators	34
2.6	Hybrid Power Conditioners	36
2.6.1	Synchronous Inverter/Synchronous Condenser	37
2.7	Conclusions of Survey	39
2.7.1	On-Board Electric Power Sources/ Conditioners	40
2.7.2	Wayside Electric Power Sources/ Conditioners	40

Preceding page blank

TABLE OF CONTENTS (CONTINUED)

Section		Page
3.0	TECHNICAL DISCUSSION PART 2 - TECHNICAL EVALUATION OF SELECTED POWER CONDITIONERS.....	42
	3.1 Introduction.....	42
	3.2 Characteristics of the Linear Induction Motor.....	42
	3.3 Dc Motor-Alternator Power Conditioner.....	48
	3.3.1 Introduction.....	48
	3.3.2 System Description.....	48
	3.3.3 System Design.....	51
	3.3.4 System Operation.....	61
	3.3.5 Special Dc Motor System.....	66
	3.3.6 Summary.....	67
	3.4 Natural Commutated Inverter Power Conditioner.....	69
	3.4.1 Introduction.....	69
	3.4.2 Description.....	69
	3.4.3 System Design.....	76
	3.4.4 Control System Design.....	98
	3.4.5 System Operation.....	101
	3.4.6 Summary.....	107
	3.5 Forced Commutated Inverter Power Conditioner.	110
	3.5.1 Introduction.....	110
	3.5.2 Description.....	111
	3.5.3 System Design.....	116
	3.5.4 Control System Design.....	134
	3.5.5 Operation.....	138
	3.5.6 Summary.....	142
	3.6 Synchronous Inverter-Condenser Power Conditioner.....	146
	3.6.1 Introduction.....	146
	3.6.2 System Description.....	146
	3.6.3 System Design.....	151
	3.6.4 Control System Design.....	164
	3.6.5 Operation.....	168
	3.6.6 Summary.....	175

TABLE OF CONTENTS (CONTINUED)

Section		Page
4.0	CONCLUSIONS	179
	4.1 Survey of Power Conditioners	179
	4.2 Evaluation of Power Conditioners	180
REFERENCES		181
BIBLIOGRAPHY		183
APPENDIX A		188
APPENDIX B		196
APPENDIX C		214

LIST OF ILLUSTRATIONS

Figure		Page
2.1	Comparison of Brayton and Rankine Thermodynamic Cycles	7
2.2	Schematic of Open-Loop Brayton Cycle Turbo-Alternator	7
2.3	Schematic of Closed-Loop Brayton Cycle Turbo-Alternator	9
2.4	Schematic of Rankine Turboalternator	9
2.5	Typical Turboalternator Power Conditioner	11
2.6	Block Diagram of Quasi Square-Wave Inverter Power Conditioner	14
2.7	Block Diagram of Pulse Width Modulated Inverter Power Conditioner	16
2.8	Three-Phase Full-Wave Bridge Rectifier Circuit with Waveforms	18
2.9	Three-Phase Delay Rectifier Circuit with Waveforms	20
2.10	Three-Phase Bilateral Phase Delay Rectifier Circuit	21
2.11	Schematic of the Forced Commutated Inverter	22
2.12	Block Diagram of Natural Commutated Inverter Power Conditioner	24
2.13	Schematic of Natural Commutated Inverter	26
2.14	Schematic of One Phase of Natural Commutated Inverter	27
2.15	Line Commutated Inverter	27
2.16	Block Diagram of Cycloconverter Power Conditioner	29
2.17	Schematic of Natural Commutated Cycloconverter	30
2.18	Single-Phase Output Voltage Waveform of Natural Commutated Cycloconverter	31
2.19	Schematic of Forced Commutated Cycloconverter	32
2.20	Output Voltage Waveforms of Forced Commutated Cycloconverter	33

Preceding page blank

LIST OF ILLUSTRATIONS (CONTINUED)

Figure		Page
2.21	Block Diagram of Motor-Alternator Power Conditioner.	35
2.22	Schematic of Motor-Alternator Power Conditioner.....	36
2.23	Block Diagram of Synchronous Inverter/Condenser Power Conditioner.....	38
2.24	Schematic of Synchronous Inverter/Condenser Power Conditioner.....	39
3.1	Performance Curves for 4000 HP LIM.....	44
3.2	Equivalent Circuit for LIM Operation at (a) 330 Hz and (b) 53 Hz.....	46
3.3	Motor-Alternator LIM Drive System.....	49
3.4	Rectifier Connection for Sequential Control and Two Parallel Sections.....	55
3.5	Active and Reactive Power Relationship for Input to Transformer and Rectifiers Under Sequential Control.....	56
3.6	One-Line Diagram of Rectifier Supply System.....	57
3.7	Operation Profile of the Rectifier and Dc Drive Motor.....	62
3.8	Operation Profile of the LIM.....	63
3.9	Drive System Input kVA and kVAR Profiles with the LIM Real Power as Comparison.....	64
3.10	Block Diagram of Naturally Commutated Inverter Drive System for the LIM.....	70
3.11	Rectifier-Inverter Dc Supply Circuits.....	72
3.12	Natural Commutated Inverter, Simplified Schematic.....	73
3.13	Illustration of Current Flow During a Charge Pulse Cycle.....	74
3.14	Natural Commutated Voltage Waveforms and Charge Current Pulse.....	75

LIST OF ILLUSTRATIONS (CONTINUED)

Figure		Page
3.15	Illustration of Inverter Charge Pulses and Resulting Average Ac Output Voltage (No Load).....	77
3.16	Simplified Circuit Diagram of Rectifier-Inverter Drive for the LIM Indicating Coupling of all Three Phases.....	77
3.17	Inverter Equivalent Circuit.....	78
3.18	Current and Voltages in the Inverter Equivalent Circuit Indicating Time Segments for the Case of $V_o = 0$.....	80
3.19	Variation of the Inverter Pulse Time with the Output Voltage (Normalized).....	81
3.20	Variation of the Maximum Average Inverter Output Current with the Output Voltage Assuming No Pulse Overlap.....	83
3.21	Control System for LIM Drive Using the Naturally Commutated Inverter.....	99
3.22	Operation Profile of the LIM.....	102
3.23	Operational Profile of the Natural Commutated Drive Related to LIM Thrust.....	103
3.24	Drive System Input Power Profile Compared to LIM Real Power.....	104
3.25	Block Diagram of Forced Commutated Inverter Drive System.....	111
3.26	Rectifier-Inverter Circuits.....	113
3.27	Thyristor Firing Sequence and On Time With Phase Voltages and Currents in One Phase Assuming a Pure Resistive Load.....	115
3.28	Waveforms for Inductive Loading.....	121
3.29	Equalizing Circuits for Series Connected Thyristors.....	124
3.30	Rectifier Output Voltage and Link Current for Low Dc Link Voltage at Low Power and Speed.....	128
3.31	Block Diagram of LIM Drive System Control.....	135

LIST OF ILLUSTRATIONS (CONTINUED)

Figure		Page
3.32	Operation Profile of the LIM.....	139
3.33	Operational Profile of the Rectifier-Forced Commutated Drive.....	140
3.34	Drive System Input kVA and kVAR Profiles with the LIM Real Power as Comparison.....	141
3.35	Phase Delay Rectifier-Line Commutated Inverter Drive System for LIM.....	147
3.36	Simplified Circuit Diagram of PDR-INV Drive.....	147
3.37	Line Commutated Inverter Waveforms Showing the effects of Circuit Inductance (and the Resulting Overlap Angle μ) in the Three-Phase Load.....	149
3.38	Simplified Equivalent Circuit of Drive System Output (a) and Associated Phasor Diagram (b)....	152
3.39	Rectifier Output Voltage and Link Current for Low Dc Link Voltage at Low Power and Speed.....	159
3.40	Block Diagram of System Controls.....	165
3.41	Sketch of System Control Variables for the Beginning of each of the Three Running Modes. The Synch-Condenser Startup and Thrust Generator Transients are Neglected.....	169
3.42	Operation of Drive System.....	170
3.43	Operation of Drive System (Continued).....	171
3.44	Operation Profile of the LIM.....	172
3.45	Drive System Input kVA and kVAR Profiles with the LIM Real Power as Comparison.....	173
A.1	Simplified Control System Diagram.....	190
A.2	Noise Level of Main and APU Turbines Unmuffled and Muffled.....	191
B.1	Schematic of the Forced Commutated Inverter.....	198

LIST OF ILLUSTRATIONS (CONTINUED)

Figure		Page
B.2	Forced Commutated Inverter Switch and Phase Voltages	199
B.3	Forced Commutated Inverter Switch and Phase Currents	201
B.4	Definition of dV/dt Specification	206
B.5	Power Thyristor Protection	207
B.6	One Leg of Forced Commutated Inverter	210
B.7	Commutation Current and Voltage Waveforms	212
C.1	Series Thyristor Connection Showing Voltage Equalizing Resistors	217
C.2	Series Thyristor Connection Using Avalanche Diodes to Distribute Voltages	220
C.3	Parallel Operation of Thyristors a) With Current Balancing Resistors b) With Current Balancing Transformers	221
C.4	Series Thyristor Connection Using Shunt Capacitors to Equalize Thyristor Voltages During Commutation	222
C.5	Series Connection of Series Inverter Cells	223
C.6	Parallel Operation of Series Inverter Cells	227
C.7	Parallel Operation of Series Inverter Cells Using Single Inductor	228

LIST OF TABLES

Table		Page
2.1	Candidate Power Conditioners for Linear Induction Motor Drives	4
3.1	Specifications for LIM for System Design	43
3.2	Alternator Specifications for System Design	51
3.3	Specifications for the Dc Motor for System Design	52
3.4	Calculation of Voltage Levels for Worst Case Load.	53
3.5	Weight of Components for a Dc Motor-Alternator Drive System for one 4000 HP LIM using Conventional Design	58
3.6	Weight of Components for a Brushless Dc Motor-Alternator Drive System for two 4000 HP LIM's using Advanced Design Concepts	59
3.7	LIM Input Parameters and Theoretical Optimum Values of C_o for Maximum Power Transfer	84
3.8	Specifications for Three-Phase Natural Commutated Thyristor Inverter	87
3.9	Specifications for the Three-Phase Rectifier and Line Commutated Inverter	90
3.10	Specifications for Dc Inductor	91
3.11	Weight of Components for the Drive System using a Naturally Commutated Series Type Inverter Conventional Design	92
3.12	Weight of Components for the Drive System using a Naturally Commutated Series Type Inverter Advanced Design	92
3.13	Specifications for Forced Commutated 6-Thyristor Inverter	123
3.14	Specifications for Dc Filter	129
3.15	Specifications for Phase-Delay Rectifier and Line-Commutated Inverter	130

Preceding page blank

LIST OF TABLES (CCNTINUED)

Table		Page
3.16	Weight of Components for the Drive System using a Forced Commutated Inverter: Conventional Design	131
3.17	Weight of Components for the Drive System using a Forced Commutated Inverter: Advanced Design	132
3.18	Specifications for the Synchronous Condenser	156
3.19	Specifications for "Line-Commutated" Inverter	158
3.20	Specifications for the Dc Inductor	160
3.21	Specifications for the PDR	161
3.22	Weight of Components for the PDR-Synchronous Commutated Inverter System for a 4000 HP LIM using Conventional Design	162
3.23	Weight of Components for the PDR-Synchronous Commutated Inverter System for a 4000 HP LIM using Advanced Design	163

LIST OF ABBREVIATIONS & SYMBOLS

a	Ratio of inverter output to dc voltages V_o/V_{dc}
C_{dc}	Dc filter capacitor
D	Duty factor for commutating circuit
e_r	Instantaneous ripple voltage
f	Inverter operating frequency (adjustable)
f_d	Frequency proportional to desired speed
f_m	Frequency proportional to measured speed
Δf_c	Frequency proportional to command slip
Δf_m	Slip frequency
Δf_{max}	Maximum slip frequency
g	Suffix denoting reactive units
i_1	Current in inverter inductor (L)
I_2	Secondary current in LIM equivalent circuit
I_o	Average flow of current to C_o and Z_L
I_{c-r}	Ripple current in dc filter capacitor
I_L	LIM load current
I_{TH}	Thyristor current
I_c	Current in commutating circuit
I_D	Feedback diode current
I_{dc}	Average dc current in filter
I_r	Ripple current in I_{dc}
I_{INV}	Inverter output current, rms
I_ℓ	Power line current, rms
I_L	LIM current, rms
I_s	SC current, rms

j	Reactive element
k_v	Constant relating high and low operating voltage
L	Inductance value of dc inductor, IND
L_o	Leakage or transient inductance in inverter load circuit
L_{c1}	Optimum commutating inductance
L_f	Dc filter inductance
$(MVA)_L$	LIM volt-ampere
P_L	LIM real power
PF	Power factor ($\cos \theta$)
pu	Per unit value
Q_L	LIM reactive power
r	Suffix denoting real units
Reg	Regulation
s	LIM slip ($\frac{\text{actual speeds}}{\text{synchronous speed}}$
ΔT	1/2 ripple period
u	Overlap angle
V_d	Dc voltage at inverter input
V_c	Commutating capacitor voltage
V_{dc}	Voltage at dc filter capacitor
$V_{(a-b)_f}$	Fundamental value of inverter output (line-line) voltage
V_{c1}	Value of V_c for C_{c1}
$V_{1,2,3}$	Rms value of line-to-neutral voltages
V_L	LIM input voltage (line-line)
ΔV_{dc}	Peak-peak ripple voltage in V_{dc}
V_L	Line-line voltage at LIM input, rms

V_g	Synchronous condenser emf
V_T	Thyristor voltages
V_o	Inverter output and LIM input voltage (line-line)
$V_{\ell\ell}$	Rectifier input voltage (line-line)
V_r	Rectifier dc output ripple voltage
W	Energy in watt-sec
X_ℓ	Line impedance in pu
X_o	Pu value of inverter load reactance
X_s	Pu synchronous impedance of synchronous condenser
Y_{12}	I_2/V_L
Y	Admittance in pu
Z_L	Load impedance (LIM)
α	Rectifier firing angle
β	$\pi - \alpha$ Delay angle
δ	Recovery time
γ	Inverter thyristor on-time
θ	Load current lag angle

1.0 INTRODUCTION

Linear electric motors are the prime candidates for providing the propulsion for the planned high speed tracked levitated vehicles. The development of lightweight and reliable methods of power control for the linear motor is vital to the successful application of this method of propulsion. A program was initiated at the Transportation Systems Center at the beginning of Fiscal Year 1971 to evaluate techniques that would be applicable to the control of the linear motor.

A survey of power conditioners was conducted, and is included as Section 2 of this report. This survey identifies and describes candidate power conditioners for driving the linear induction motor in the variable frequency mode. Section 3 of this report presents the initial evaluations of the candidate power conditioners recommended from the survey.

Systems selected and evaluated in this report include the motor-alternator, natural commutated inverter, forced commutated inverter, and synchronous inverter-condenser power conditioners. The characteristics of the linear induction motor are established for the purpose of obtaining the electrical requirements for the power conditioners.

Although the cycloconverter power conditioner has been identified as a candidate system, the initial evaluation of this approach is not included in this report.

Contractor support has been utilized for this program. The Bose Corporation, Natick, Massachusetts, is fabricating the model of the natural commutated inverter, and has provided the technical analyses of the natural commutated inverter. Alexander Kusko, Inc., Needham Heights, Massachusetts, is assisting in the technical evaluation of the power conditioners.

2.0 TECHNICAL DISCUSSION PART 1 - TECHNICAL SURVEY OF POWER CONDITIONERS

2.1 INTRODUCTION

Linear induction motors will provide the propulsion for the planned high-speed tracked vehicles. Maximum performance of the linear induction motor is obtained when the motor is driven with variable frequency power. Motor thrust can be maximized at all speeds. The apparent power requirements are proportional to the motor speed. During acceleration, the extra heat losses in the motor windings and reaction rail are kept to a minimum and do not represent design penalties.

The purpose of power conditioning is to provide the matching interface between the available power and the power desired for driving the linear induction motor. As an integral part of the propulsion system, the power conditioner provides the means for controlling both the thrust and the braking of the vehicles. The development of on-board light-weight power conditioning is vital for practical propulsion of high-speed tracked vehicles.

The purpose of this section is to identify candidate power conditioners and to briefly describe their operational characteristics. The candidate power conditioners have been identified from surveys of ground transportation applications, industrial and power utilities applications, and aerospace applications.

Table 2.1 lists the candidate power conditioners described in this report. The power conditioners are divided into two major categories: (1) on-board electric power sources, and (2) wayside electric power sources. The on-board electric power sources category is divided into: power conditioning with static electric power sources, and power conditioning with dynamic electric power sources. The static electric power sources represent direct power conversion systems in which heat or chemical energy is

converted directly into electrical energy. The dynamic electric power sources represent systems where heat is converted into electrical energy through an intermediate step of mechanical energy.

The wayside electric power sources category is divided into solid-state power conditioners, rotary power conditioners, and hybrid power conditioners. The solid-state power conditioners utilize high-power solid-state electronics technologies. The rotary power conditioners utilize conventional rotating machinery technologies. The hybrid power conditioners utilize combinations of solid state and rotary machines.

The following sections provide brief technical descriptions of the operating characteristics of the above power conditioners.

TABLE 2.1 CANDIDATE POWER CONDITIONERS FOR LINEAR INDUCTION MOTOR DRIVES

I ON-BOARD ELECTRIC POWER SOURCES	
STATIC ELECTRIC POWER SOURCES/CONDITIONERS	BATTERIES FUEL CELLS THERMOELECTRICS
DYNAMIC ELECTRIC POWER SOURCES/CONDITIONERS	INTERNAL COMBUSTION ENGINE/ ALTERNATOR BRAYTON GAS TURBINE/ALTERNATOR RANKINE GAS TURBINE/ALTERNATOR
II WAYSIDE ELECTRIC POWER SOURCES	
SOLID STATIC POWER CONDITIONERS	FORCED COMMUTATED INVERTER NATURAL COMMUTATED INVERTER LINE COMMUTATED INVERTER/ CYCLOCONVERTERS
ROTARY POWER CONDITIONERS	MOTOR ALTERNATORS
HYBRID POWER CONDITIONERS	SYNCHRONOUS INVERTER/ ROTARY CONDENSER

2.2 ON-BOARD ELECTRICAL POWER SOURCES

Sources of electrical power generated on board the vehicle are:

1. Batteries
2. Fuel Cells
3. Isotope Thermoelectric Generators
4. Internal Combustion Engine (Otto Cycle)/Alternator (Diesel)
5. Gas Turbine (Brayton Cycle)/Alternator
6. Turbine (Rankine Cycle)/Alternator

Fuel cells, in their present state of development, cannot generate power in the megawatt range at a reasonable cost. Batteries and thermoelectric generators lack sufficient energy density to make them practical in the megawatt range. The last three power sources in the list are those conversion schemes with mechanical energy as an intermediate product which have been developed to the state where they could reliably meet the power requirements.

The internal combustion engine can be dismissed as a potential candidate since it is less efficient and emits more pollutants than either of the turbine candidates. The Brayton and Rankine cycle turbines are, then, the most practical sources of on-board power available to high-speed ground transport vehicles for the near future.

Figure 2.1 compares the Brayton and Rankine thermodynamic cycles. In the Rankine cycle, a pump is used to pump the condensate returning from the radiator from a pressure corresponding with the condensing temperature up to a pressure corresponding with the boiling temperature. The liquid at high pressure is heated to boiling temperature, boiled along a constant temperature line, and expanded down to condensing pressure and temperature in a turbine that drives a generator. The vapor is then condensed and returned to the pump.

In the Brayton cycle, a compression process is followed by heating, at approximately constant pressure, to the turbine inlet temperature. The gas is expanded through the turbine and is then cooled along an essentially constant pressure path. The cycle is said to be closed if the cooled gas from the radiator is returned to the compressor. If instead, a continuous supply of gas is fed into the compressor, the cycle is then said to be open. The latter is the principle of operation of the gas turbine and will be discussed in more detail in connection with the turboalternator unit on the existing LIM test vehicle.

2.2.1 Open-Loop Brayton Cycle Turboalternator

Figure 2.2 is a schematic for an open-loop Brayton cycle turbine described in the previous section. Air enters the compressor where its pressure is substantially raised. The high-pressure air then enters the combustor chamber, where fuel is added and burned. The high-pressure high-temperature gas then expands through a turbine, spinning it and producing mechanical work. Forty to eighty percent of this work is used to power the compressor, and the remaining work is used to drive the generator which, in turn, produces the useful electrical power.

2.2.2 Closed-Loop Brayton Turboalternator

Figure 2.3 shows the modification required for a closed-loop Brayton cycle. Provision is made to reduce the temperature of the gas prior to redirecting it back to the compressor by first passing the exhaust gas through a heat exchanger called a recuperator, where heat is transferred back into the working fluid at the compressor exit. Such a step has the additional advantage of preheating the gas prior to going into the heat source and, thus, it substantially improves the efficiency of the cycle. Final cooling then takes place in the heat sink heat exchanger, where the remaining waste heat is transferred to a heat rejection loop. The heat is piped through a radiator where it is finally rejected to the atmosphere.

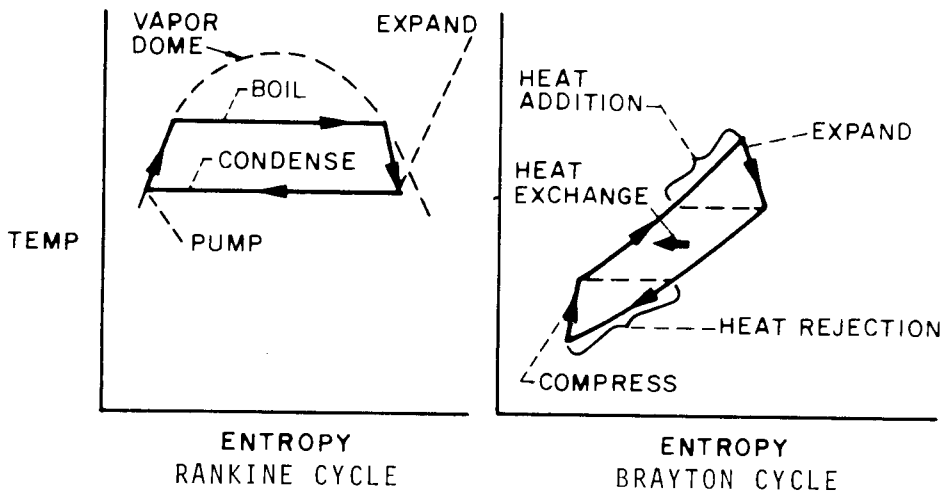

Figure 2.1 Comparison of Brayton and Rankine Thermodynamic Cycles

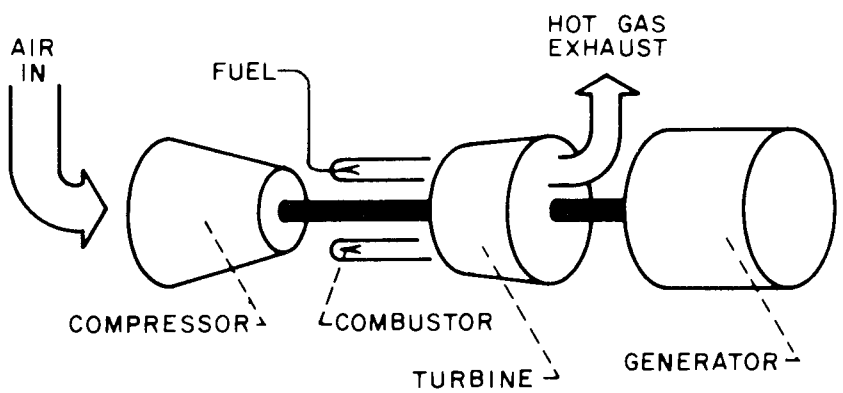

Figure 2.2 Schematic of Open-Loop Brayton Cycle Turboalternator

2.2.3 Closed-Loop Rankine Cycle Turboalternator

Figure 2.4 is a schematic of the Rankine Turboalternator. Liquid is heated at constant pressure in the boiler to produce vaporization. The vapor is then expanded through a turbine to turn the alternator. The fluid is then cooled in the condenser to a liquid before pumping it back to the boiler. The components required for the closed-loop Brayton and Rankine cycles perform the same functions. The Rankine cycle requires less power to drive the pump than the Brayton cycle requires to run the compressor. However, operating limitations for a Rankine cycle resulting from a fixed vapor pressure-temperature relationship make efficiencies of the two closed-loop cycles comparable.

2.2.4 Open-Loop versus Closed-Loop Turboalternators

Either closed-loop cycle has the advantage over the conventional (open-loop) gas turbine of being less noisy and emitting less pollutants into the atmosphere, whether the heat source is chemical or nuclear. For these reasons, they are considered as potential candidates for high-speed ground transportation vehicles. The alternator remains essentially unchanged for a closed-loop cycle. The turbine must have a free spool to produce variable frequency electrical power or there must be a hydraulic clutch linking the turbine and alternator.

The primary disadvantage of a closed-loop turboalternator is the weight penalty incurred in carrying heat exchange equipment.

Closed-loop systems, other than the steam turbine, are only in the developmental stage. The primary field of research has been in finding suitable materials. In the case of the Rankine cycle, it has been finding a substitute for water as the working fluid, since it is highly corrosive and can freeze when the engine is shut down. Lubricants for pump and turbine bearings are also being developed. Materials research for the Brayton

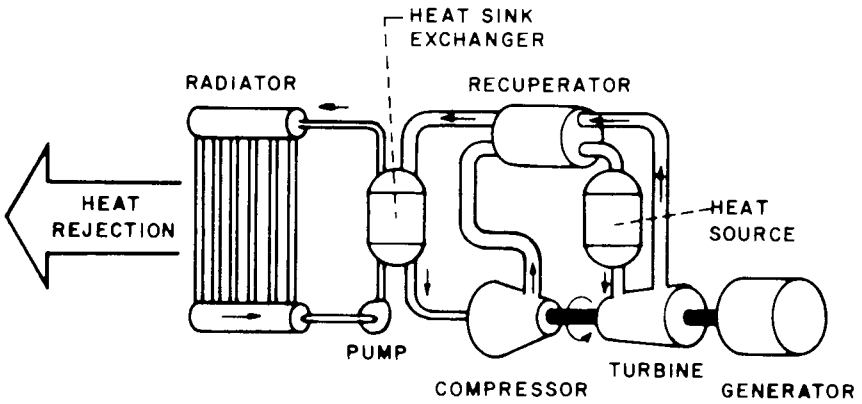

Figure 2.3 Schematic of Closed-Loop Brayton Cycle Turboalternator

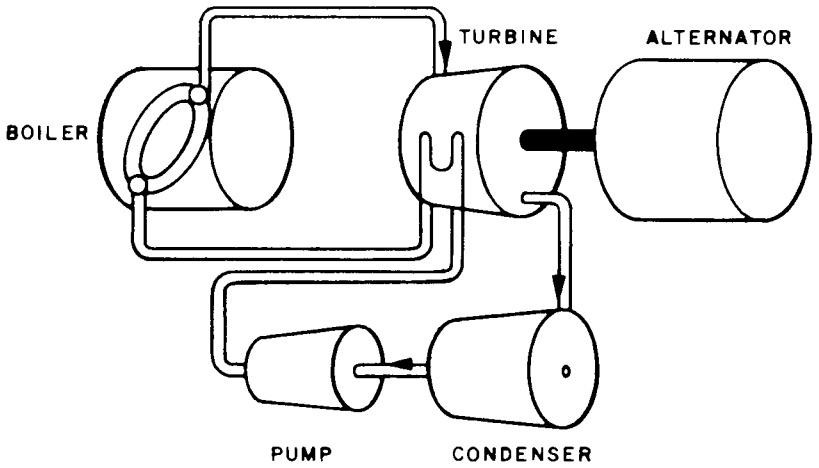

Figure 2.4 Schematic of Rankine Turboalternator

cycle has attempted to find metals capable of operating at high temperatures so that thermal efficiencies which make this system attractive can be achieved without carrying extensive heat exchange equipment on board.

2.3 TURBOALTERNATOR POWER CONDITIONERS

The turboalternator is capable of supplying variable frequency, variable voltage power to a linear induction motor. Variable frequency is achieved by varying alternator speed. This can be accomplished by varying turbine speed, in which case, a free-spool turbine is preferable since its output shaft speed can be regulated down to zero rpm, or by using a fluid clutch between the turbine and the alternator. Field regulation in the alternator is not essential. However, for a nonregulated field, it has been found that a significant weight penalty must be incurred in oversizing the alternator so that the effect of internal reactance on alternator output voltage is acceptable. Hence, field excitation control is to be considered.

Figure 2.5 is a typical block diagram of a turboalternator - power conditioner. The fuel control can provide torque and/or speed control over the speed range. The field regulator is shown as a feedback control which would be used to control alternator output voltage. Field excitation is usually supplied by the auxiliary power source which also supplies electrical power for onboard electrical systems.

Operating in the thrust mode with the dynamic brake switch open and the throttle control "on", the turbine delivers torque to the alternator which, in turn, produces the required alternating current for the LIM. The two feedback loops are used for control of voltage and frequency to the LIM.

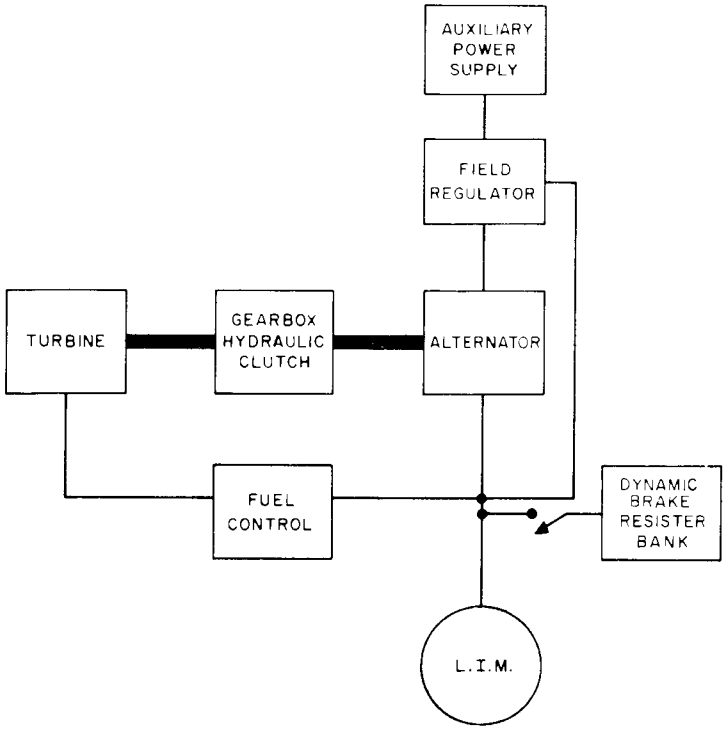

Figure 2.5 Typical Turboalternator Power Conditioner

2.3.1 Operation in the Brake Mode

The dynamic braking method is applicable for this system. In the braking mode the LIM functions as an induction generator. With the dynamic break switch closed and the throttle control off the regenerated ac power is dissipated in the dynamic brake resistor bank. An alternative dynamic braking concept is possible if a hydraulic clutch is used.

As before, the LIM-generated ac is fed into the alternator, now functioning as a motor. This, in turn, torques the output shaft of the hydraulic clutch and dissipates energy as heat in the hydraulic fluid of the clutch.

2.4 WAYSIDE ELECTRIC POWER SOURCES

2.4.1 Solid-State Power Conditioners

Solid-state power conditioners make use of high-power electronic circuits. These circuits are operated in the switching mode to maximize the electric efficiency. The solid-state switches normally used are thyristors because of the required power levels. The thyristor is a latching switch; hence, the relatively simple techniques for turning the switches on cannot be used to turn the switches off or to commutate them.

Because the power conditioners to be described in this section can be classified by the different techniques for commutating the thyristors, a brief discussion on thyristor turn-off characteristics follows. There are three methods for turning thyristor devices off. In the first method, the anode current is reduced below a minimum value called the holding current. When this occurs, the device reverts to the blocking mode and turn off is accomplished. In the second method, the anode current is interrupted by reversing the anode-cathode voltage. This is the normal turn off mode of rectifiers when used in ac circuits where the circuit voltage reverses every half cycle. In the third method, the value of the holding current is made to increase by supplying a negative gate current; when the holding current increases above the anode current, the device turns off as in method 1. This third method is practical for low-power levels only, and will not be considered any further here.

At the present time, any universally accepted classifications of power conditioners do not exist. Hence, the classification of power conditioners which follows should be considered applicable only to this report. Naturally commutated inverters (sometimes referred to as series capacitor inverters) are those which utilize the first method of thyristor turn off. Forced commutated inverters (sometimes referred to as parallel capacitor inverters) are those which utilize the second method of thyristor turn off.

Line commutated inverters are special purpose inverters which operate in parallel with an ac bus and make use of both methods for thyristor turn off. All of the above power conditioners operate from a dc-power source and are considered as dc-link inverters.

Power conditioners which operate directly from ac-power sources are considered as ac-link inverters. The cycloconverter is of this type and it utilizes the second method of thyristor turn off.

The following sections provide descriptions of operation for each of the foregoing power conditioners.

2.4.2 Forced Commutated Inverter Power Conditioners

Forced commutated inverter power conditioners operate directly from a dc bus and make use of auxiliary circuits to accomplishe commutation. The modes of operation of these inverters are based on the forced interruption of load currents as part of their cyclic operation. Several types of forced commutated inverters have been developed, with the major differences being in the implementation of the commutation. The circuits to be described here should be considered only as being representative of this class of power conditioners.

Two methods for control of the forced commutated inverter are possible, and these methods can be identified as the quasi square-wave inverter and the pulse width modulated inverter.

2.4.2.1 Quasi Square-Wave Inverter - A block diagram of the quasi square-wave inverter power conditioner is shown in Figure 2.6. Typical output voltage waveforms are also shown in this figure. This system consists of a phase delay rectifier (PDR), a forced commutated inverter (FCI), a thrust control fed into the PDR, and a speed control fed into the FCI. Both controls operate to provide variable frequency power into the LIM. Note that the switching frequency of the power switches in the inverter is the same as the desired excitation frequency of the LIM. This approach requires that the input to the inverter be regulated.

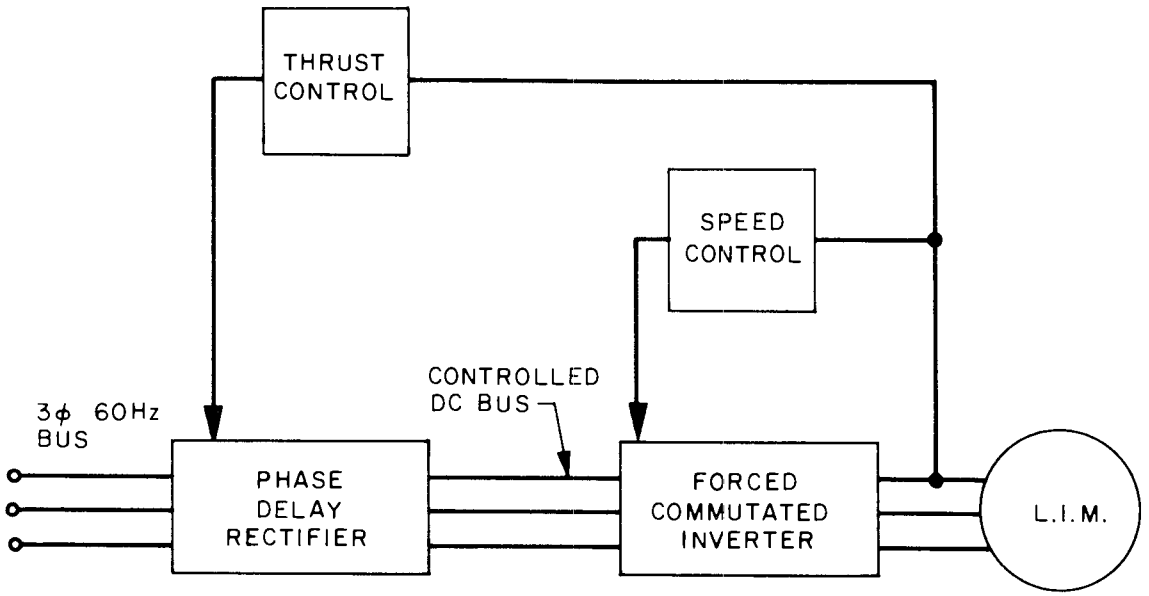

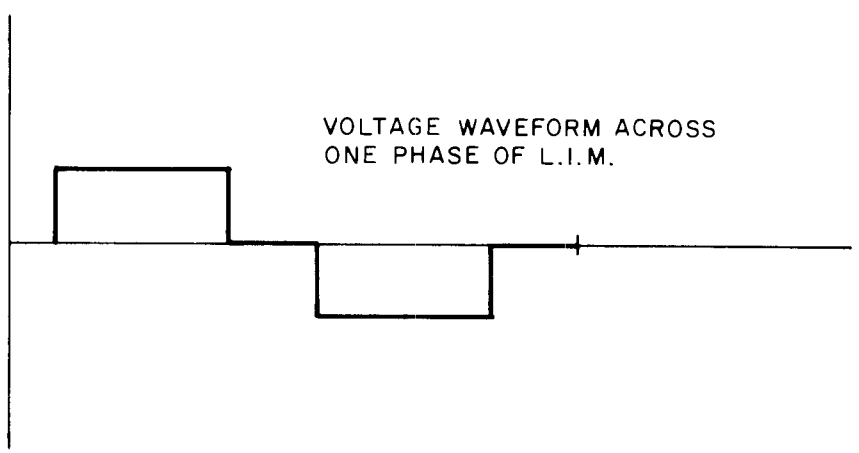

Figure 2.6 Block Diagram of Quasi Square-Wave Inverter Power Conditioner

All the real and reactive power must be processed through the inverter. Two alternatives exist for providing this reactive power to the inverter. One alternative is to use energy storage elements at the output of the phase delay rectifier. The second alternative is to provide bilateral operation of the phase delay rectifier.

2.4.2.2 Operation in the Thrust Mode - The ac wayside power is converted to a variable and controlled dc voltage through the phase delay rectifier. This dc power is applied to the inverter where it is processed into the variable frequency power required by the LIM.

2.4.2.3 Operation in the Brake Mode - Regenerative braking can be accomplished with this system if either a bilateral phase delay rectifier or a dc bus reversing switch is used. In the braking mode, the LIM functions as an induction generator and the inverter processes this power to dc, but, without any polarity reversal. If a unilateral phase delay rectifier is used, a reversing switch reverses the polarity of the dc bus. The phase delay rectifier now operates as a line commutated inverter, and the regenerated power is transferred to the 60-Hz bus.

If a bilateral phase delay rectifier is used, polarity reversal of the dc bus is not required. One rectifier section operates as a line commutated inverter, and the regenerated power is transferred to the 60-Hz bus.

2.4.2.4 Pulse Width Modulated Inverter - A block diagram of the pulse width modulated inverter power conditioner is shown in Figure 2.7. Typical output voltage waveforms are also shown in the figure. This system consists of a rectifier, a forced commutated inverter, with the thrust control and speed control both fed into the inverter. Note that the switching frequency of the power switches in the inverter is much higher than the desired

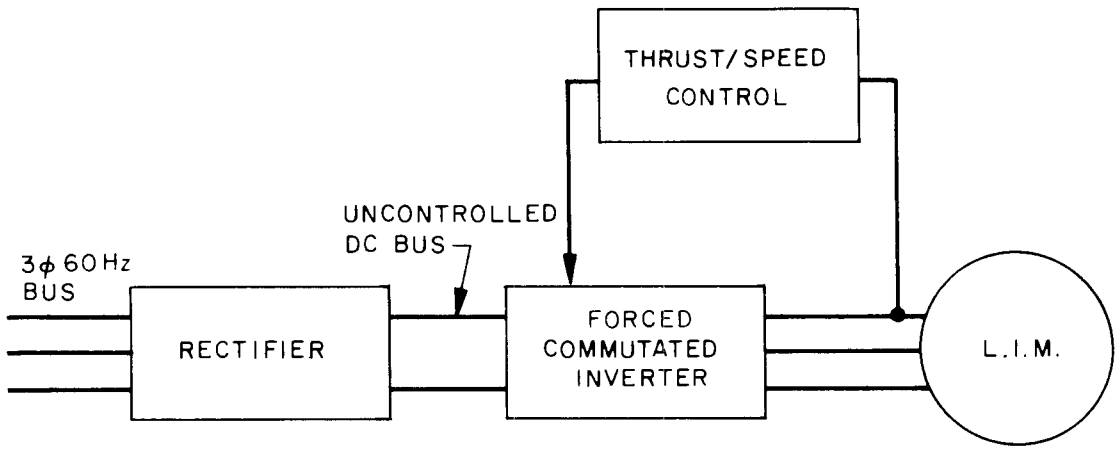

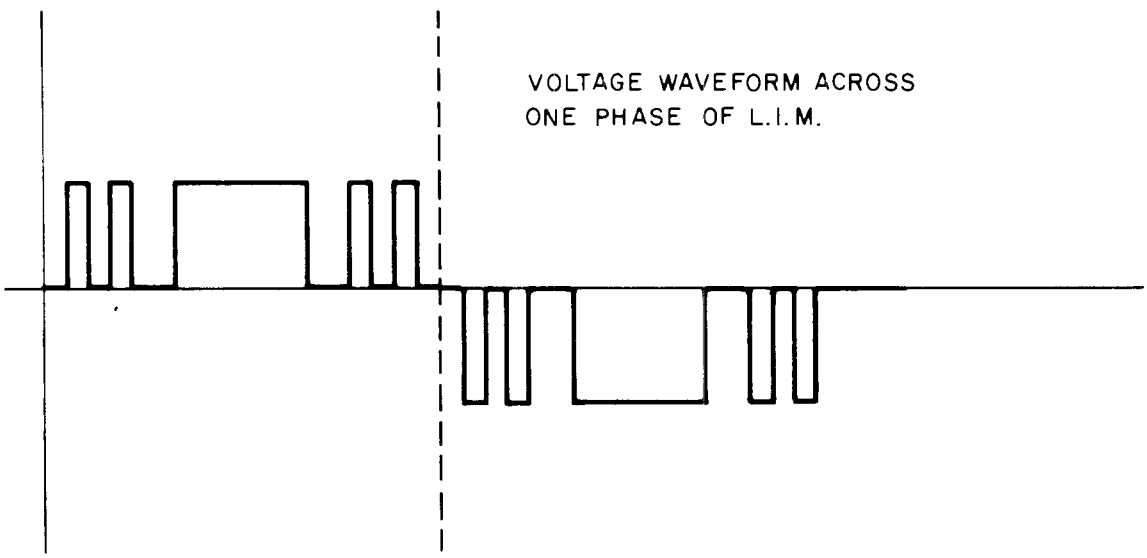

Figure 2.7 Block Diagram of Pulse Width Modulated Inverter Power Conditioner

excitation frequency of the LIM. By proper control of the pulse width modulation, both the amplitude and frequency output of the inverter can be controlled.

All the real and reactive power must be processed through the inverter. The same considerations previously described for the quasi square-wave inverter are also applicable to the pulse width modulated inverter for supplying the required reactive power.

2.4.2.5 Operation in the Thrust Mode - Operation in the thrust mode is the same as that described for the quasi square inverter.

2.4.2.6 Operation in the Brake Mode - Operation in the brake mode is the same as that described for the quasi square-wave inverter.

2.4.3 Circuit Descriptions

2.4.3.1 Ac to Dc Bridge Rectifiers - A typical 3-phase full-wave rectifier circuit, with waveforms is shown in Figure 2.8. Each diode conducts when it is forward biased by the supply and the circuit gives dc output voltage with a ripple which is six times the supply frequency. A dc filter may be required depending on the load. As shown by the rectifier current waveforms in Figure 2.8 (which assume that the load is inductive) each diode conducts for 1/3 of the total period and the average output current is three times the device average current.

If the supply is single phase, then the peak-to-peak amplitude of the output ripple voltage is 7.5 times greater than the three-phase rectifier ripple voltage, and the output ripple frequency is 1/3 of the three-phase rectifier ripple frequency. The output from a single-phase bridge rectifier is much less suitable for subsequent stages of power conditioning and the dc filter requirements are much more stringent. Therefore, three-phase supplies are more desirable when a dc supply has to be generated with an ac source.

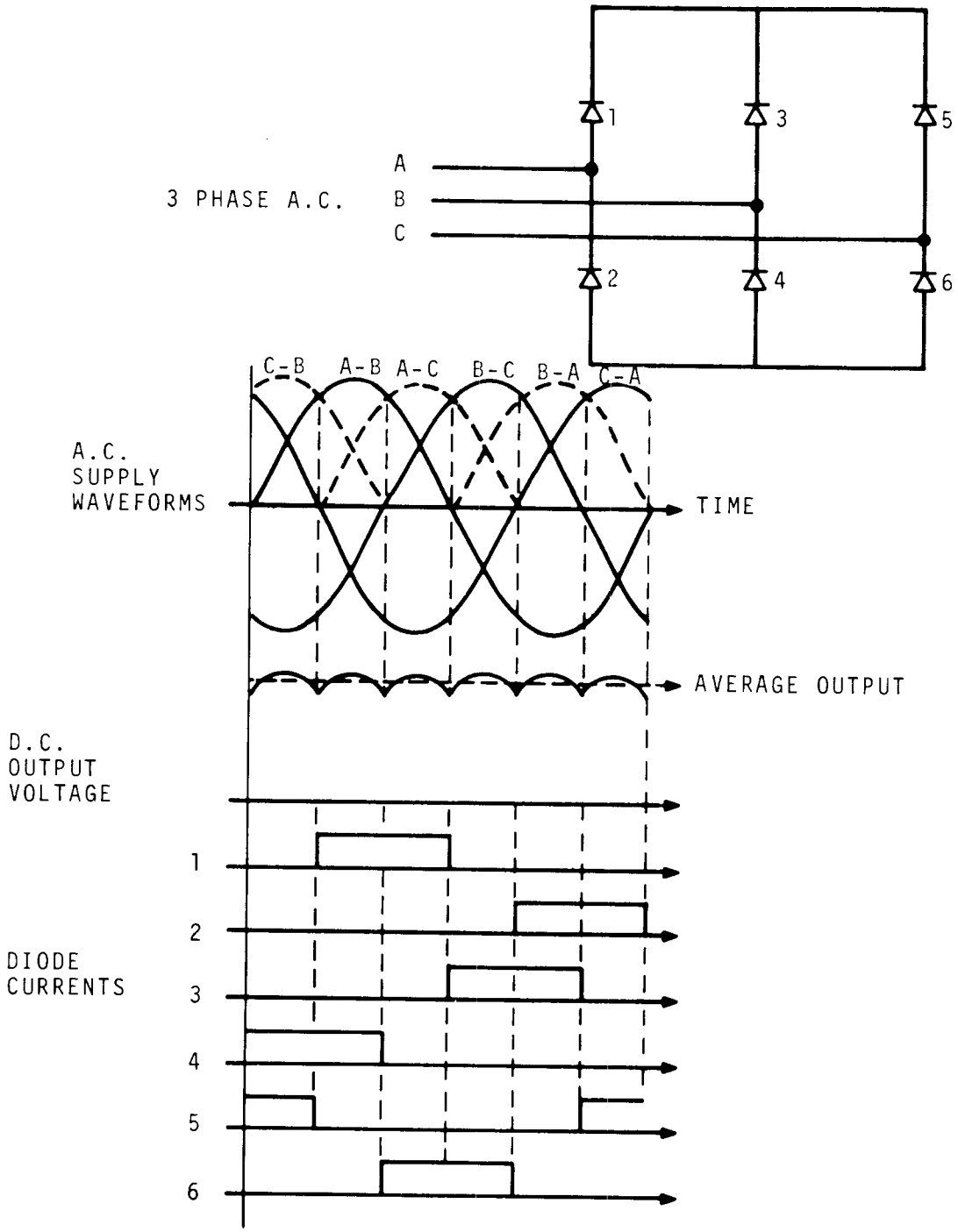

Figure 2.8 Three-Phase Full-Wave Bridge Rectifier Circuit with Waveforms

2.4.3.2 Ac to Dc Phase Delay Controlled Rectifiers - A typical three-phase, full-wave, phase delay converter circuit with waveforms is shown in Figure 2.9. The operation of this circuit is similar to the rectifier except that the diodes are replaced with thyristors. In this circuit, the point at which the thyristors conduct can be delayed beyond the time when the thyristor becomes forward biased. Figure 2.9 shows the output waveform and current relationships when the thyristor conduction point has been delayed by 30°. As shown in Figure 2.9, the average output voltage has been reduced. By comparing the current flow periods relative to the supply waveforms in Figures 2.8 and 2.9, a reduction of the power factor presented to the supply by the equipment is evident.

If filters are required in the dc output, the ripple frequency is the same as for a three-phase rectifier. However, the peak-to-peak ripple voltage and harmonic content vary as functions of thyristor firing delay angle. Figure 2.9 shows the output waveform from a controlled converter with inductive load when the average output voltage is zero.

For single-phase supplies, the comments on rectifier circuits in the previous section also apply to controlled rectifier circuits.

The circuit shown in Figure 2.10, is a bilateral phase delay rectifier required for regenerative braking where the dc bus voltage cannot be reversed. Typical waveforms are also shown in the figure.

2.4.3.3 Forced Commutated Inverter Circuit - A schematic of the forced commutated inverter is shown in Figure 2.11. This circuit is commonly known as the McMurray-Bedford inverter and its operation is as follows. The main power switches are CR1-CR6, and the commutating switches are CR7-CR12. The inductors L1-L3 and capacitors C1-C3 are part of the commutating networks. Rectifiers D1-D6 are for the reactive power and for the regenerative power mode. Assume that CR1 is conducting and that the charge is as shown only on C1 from the previous operating cycle. To commutate

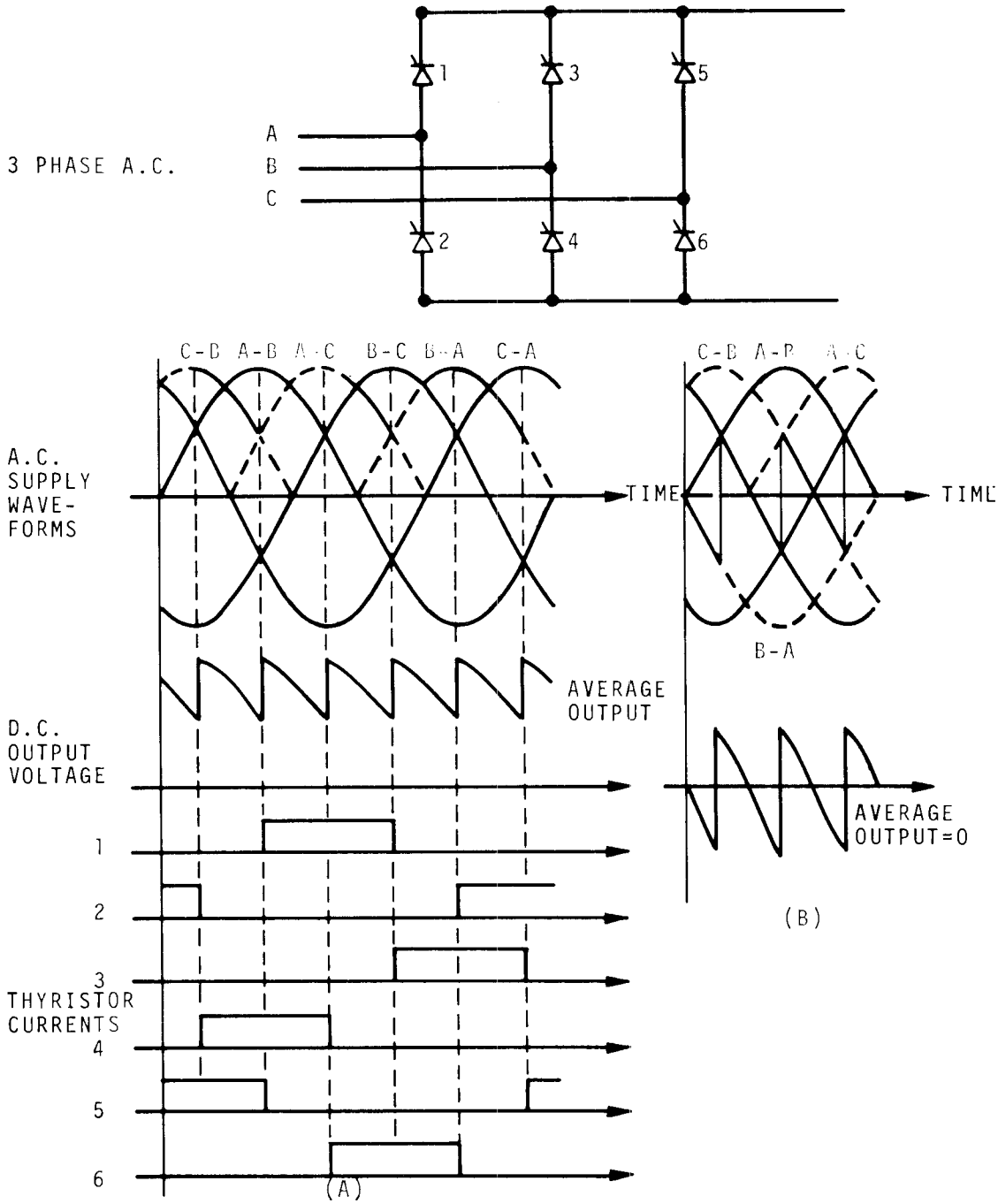

Figure 2.9 Three-Phase Delay Rectifier Circuit with Waveforms

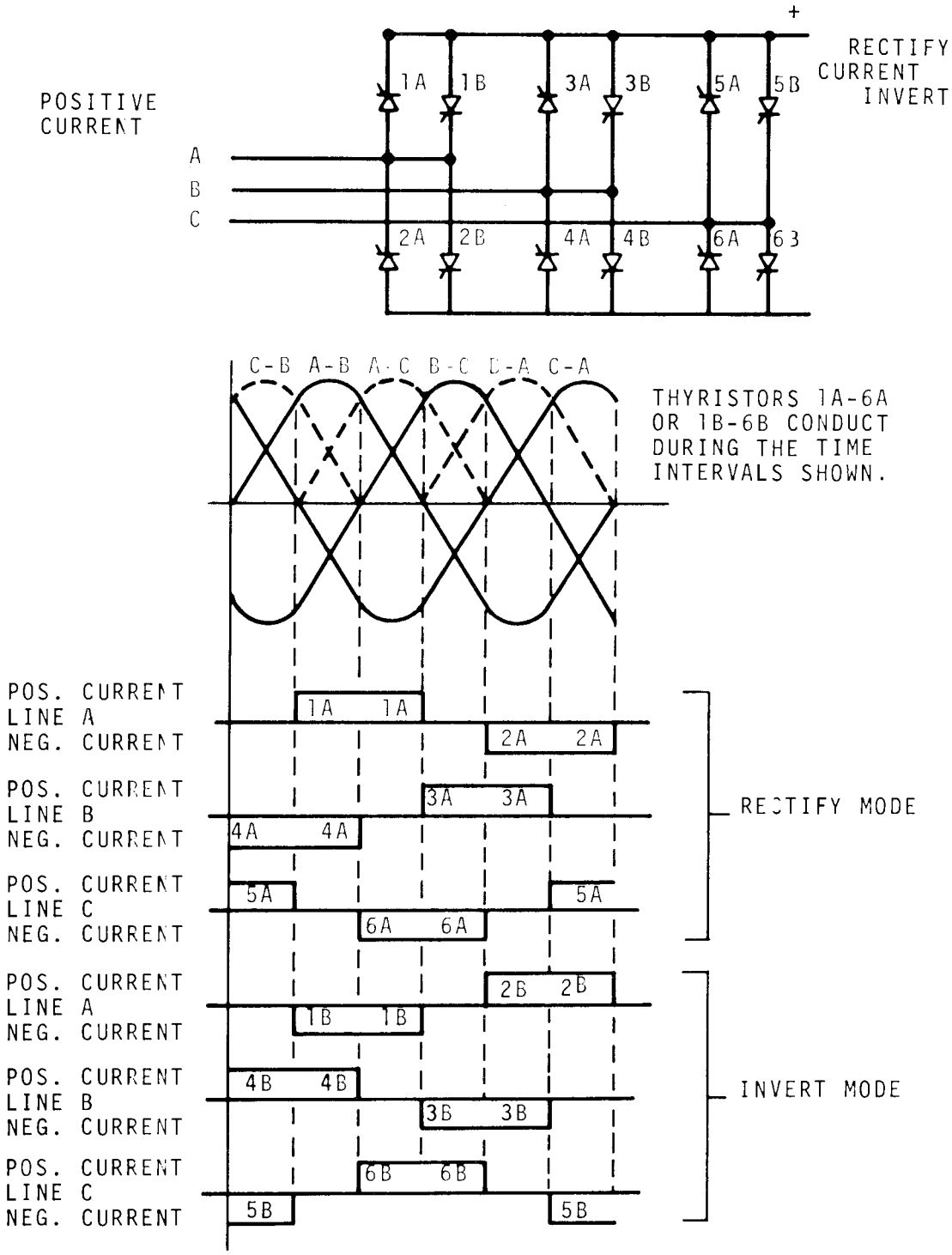

Figure 2.10 Three-Phase Bilateral Phase Delay Rectifier Circuit

CR1, controlled rectifier CR7 is fired. A pulse current flows through CR1 in reverse CR7, L, and C1. This current builds to a value in excess of the load current through CR1 such that the net current CR1 is reduced to zero. The excess of the commutating impulse current i_c, over the load current I_L then flows through the feedback rectifier D1. After reaching a peak, the commutating current starts to decay, and a charge of reversed polarity builds up on capacitor C1. During the time that rectifier D1 is carrying current, the forward drop of D1 appears as an inverse voltage across CR1, and it turns off. The circuit is now ready for its next cycle of operation namely the firing of CR2 and its commutation.

For quasi square-wave operation the dc bus is variable and controlled and a modification to circuit in Figure 2.11 is required. The commutation networks are reconnected to an auxiliary dc bus of fixed potential so that sufficient commutation can be made available for all main dc bus conditions. For pulse width operation, the circuit, as described and shown, is applicable.

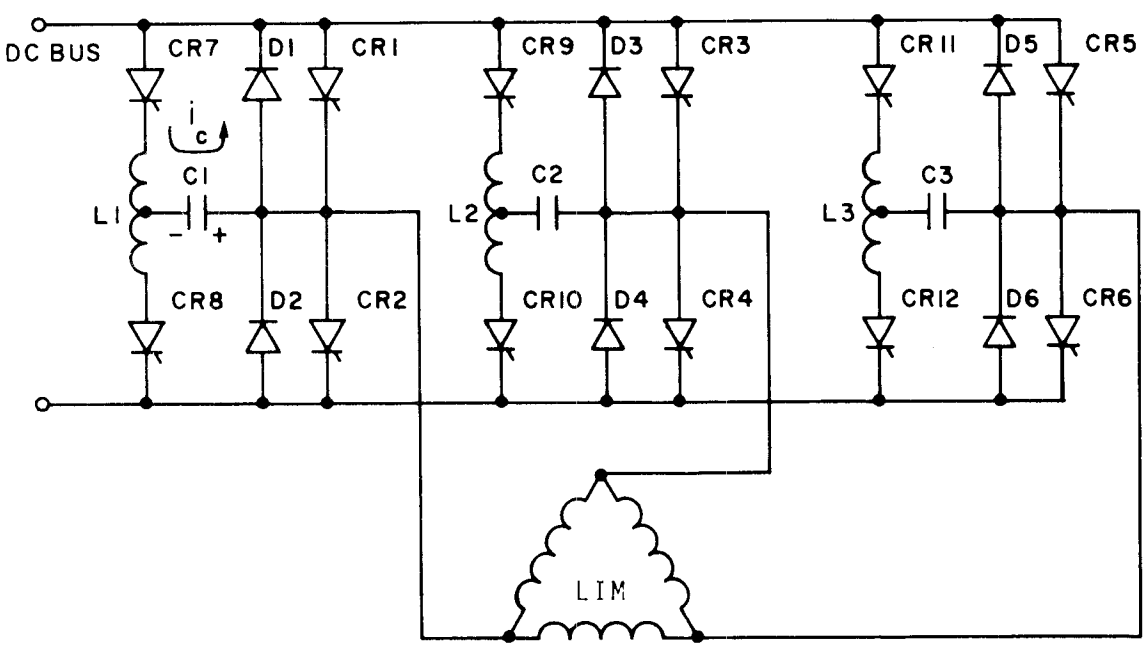

Figure 2.11 Schematic of the Forced Commutated Inverter

2.4.4 Natural Commutated Inverter Power Conditioners

Natural commutated inverter power conditioners (sometimes called series inverters) operate directly from a dc bus. In these inverters, the commutation circuits are an integral part of the power circuit. The mode of operation of these inverters is based on the natural turn off of these circuits as part of the normal cyclic operation, where the commutation networks are in series with the power switches. The common series inverter is said to suffer from two major limitations: (1) it cannot be controlled, and (2) it is load sensitive. The series inverter is uncontrollable and load sensitive (unlike the parallel inverter) when operated at fixed frequency. However, when pulse frequency modulation is employed, these limitations are overcome.

A block diagram of the natural commutated inverter power conditioner is shown in Figure 2.12. Typical output voltage waveforms are also shown in this figure. Note that the sinewave of voltage is synthesized from a series of high-frequency pulses. This system consists of a rectifier, a natural commutated inverter, and a thrust and speed control fed into the inverter. By pulse frequency modulation within the inverter, a variable frequency, variable voltage amplitude is applied across the LIM. This system does not require a controlled dc bus; therefore, only a rectifier converter is required.

All the real and reactive power must be processed through the inverter. Two alternatives exist for providing this reactive power to the inverter: one alternative is to use energy storage elements at the output of the rectifier, the second alternative is to provide bilateral operation of the rectifier.

2.4.4.1 Operation in the Thrust Mode - The ac wayside power is converted to an uncontrolled dc voltage through the rectifier. This dc power is applied to the inverter where it is processed into the variable frequency power required by the LIM.

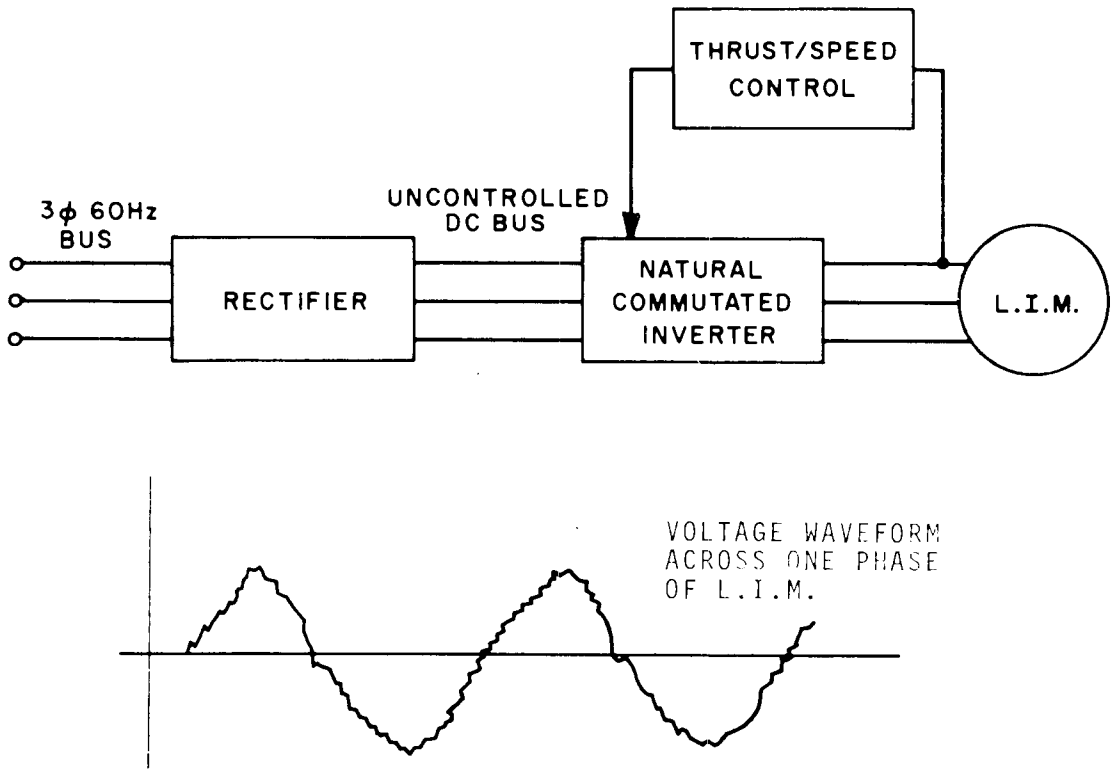

Figure 2.12 Block Diagram of Natural Commutated Inverter Power Conditioner

2.4.4.2 Operation in the Brake Mode - Regenerative braking can be accomplished with this system if either a bilateral rectifier or a dc bus reversing switch is used. In the braking mode, the LIM functions as an induction generator, and the inverter processes this power to dc but without any polarity reversal. If a unilateral rectifier is used, a reversing switch reverses the dc bus. The rectifier then operates as a line commutated inverter and the regenerated power is transferred to the 60-Hz bus. If a bilateral rectifier is used, polarity reversal of the dc bus is not required. One rectifier section operates as a line commutated inverter, and the regenerated power is transferred to the 60-Hz bus. In either case, control of the regenerated power is accomplished within the natural commutated inverter.

2.4.4.3 Circuit Description of the Natural Commutated Inverter - A schematic of the natural commutated inverter is shown in Figure 2.13. Looking at one phase in Figure 2.14, the power switch sequences are CR1 & CR4, CR3 & CR2 for positive current, and CR5 & CR8, CR7 & CR6 for negative current. Each time a set of power switches fires, a resonant circuit consisting alternatively of LC_1, or LC_2 is connected in series. Controlled rectifiers CR9-CR10 are for reactive power flow and regenerative power flow. Capacitor C3 in conjunction with L forms a low-pass filter for blocking the high-frequency switching component of the power switches.

To examine one cycle of operation, assume that CR1-CR4 are fired and capacitor C1 is charged as shown. A sinusoidal pulse of current flows through C1. As this current flows to zero, CR1-CR4 are naturally commutated and the polarity across capacitor C1 reverses, thus reverse biasing CR1 & CR4. One cycle of high-frequency operation has been completed. Next CR3 & CR2 are fired and the cycle proceeds as described. Several high-frequency cycles are required to form one half-cycle of current through the LIM. To form a negative half cycle of current through the LIM, switches CR5 & CR8 and CR7 & CR6 are cycled several times.

For regenerative operation, controlled rectifiers CR9 & CR10 form one part of a phase delay rectifier. Note that this returns energy back to the dc bus without any polarity reversal.

A more detailed description of the natural commutated inverter is provided in Appendix B.

2.4.5 Line Commutated Inverters

The line commutated inverter operates in parallel with an ac bus as shown in Figure 2.15. The commutation process is accomplished automatically by this cyclic reversal of the ac bus voltages, and no other circuit elements are required to provide commutation. However, since commutation is provided by the ac bus, this type inverter can only operate into an ac system where the system voltage waveshape is maintained relatively independent of the inverter operation.

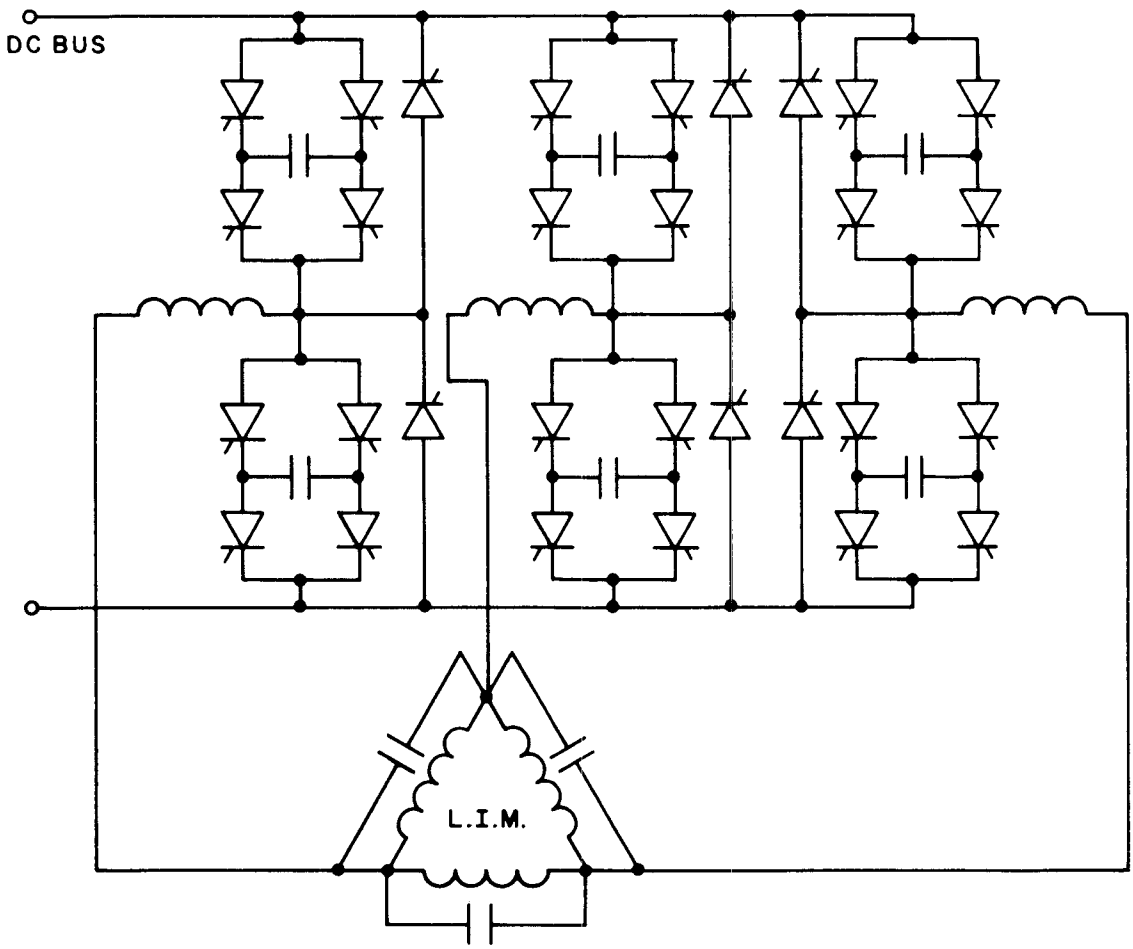

Figure 2.13 Schematic of Natural Commutated Inverter

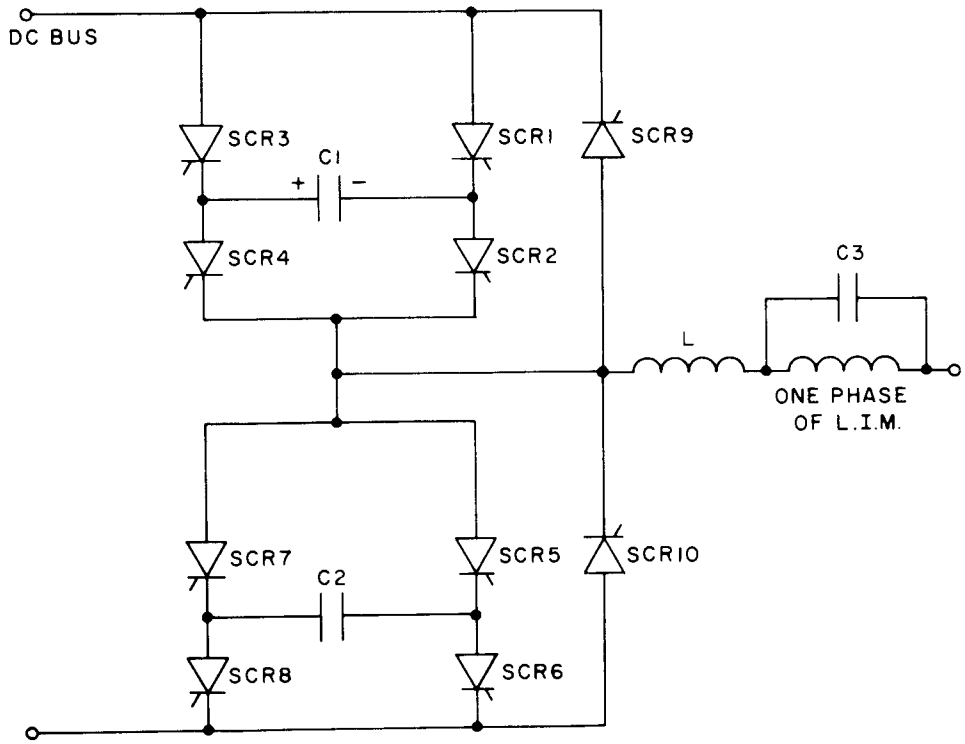

Figure 2.14 Schematic of One Phase of Natural Commutated Inverter

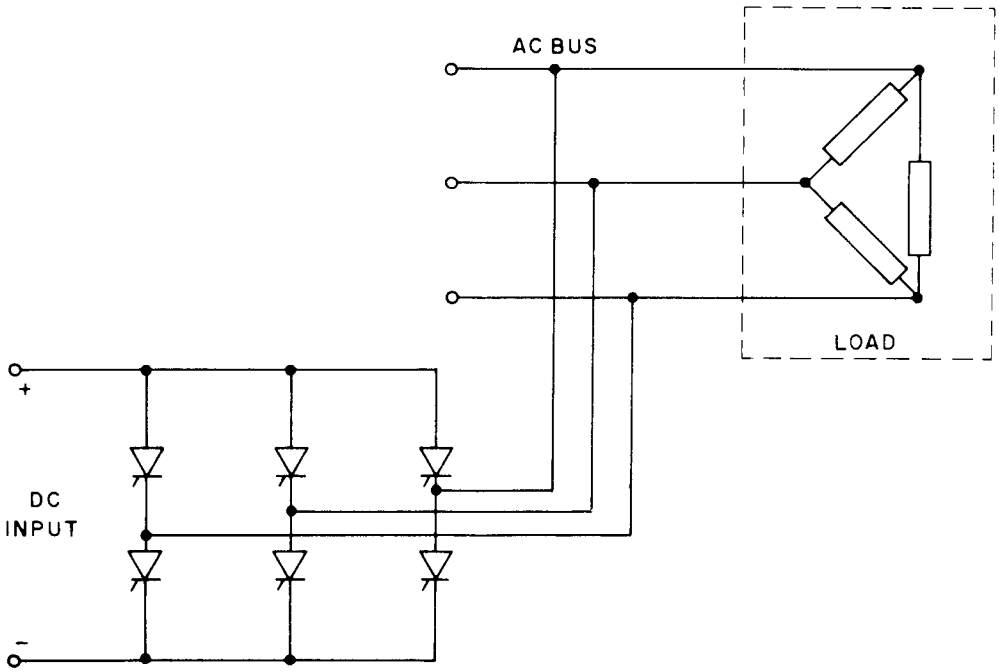

Figure 2.15 Line Commutated Inverter

Line commutated inverters cannot of themselves be considered as power conditioners for providing variable frequency power, as this inverter must operate in parallel with an ac bus. In the section, "Hybrid Power Conditioners", the line commutated inverter is further discussed as a component part of a system wherein an artificial ac bus is created.

2.4.6 Cycloconverter Power Conditioners

Cycloconverter power conditioners operate directly from ac power sources without an intermediate dc link. They are divided into two types, depending upon whether the switching elements are commutated by the cyclic switching of the input voltages (natural commutation), or are commutated at will (forced commutation). The natural commutated type has been extensively developed for application to aircraft power systems as part of the VSCF (Variable Speed-Constant Frequency) power system. The forced commutated type has not progressed significantly beyond the initial development stage.

A block diagram of the cycloconverter power conditioner is shown in Figure 2.16. This system consists of the cycloconverter operating directly from the ac bus and providing variable frequency and voltage to the LIM. The cycloconverter is inherently a bilateral machine and can accept power from the load as well as deliver power to the load therefore, regenerative braking can be accomplished with this system.

2.4.6.1 Natural Commutated Cycloconverter - A schematic of the natural commutated cycloconverter is shown in Figure 2.17. This power conditioner consists of three bilateral thyristor bridge circuits, one bridge for each phase of the LIM. The configuration shown has no transformers; thus, it requires that each of the phases of the LIM be isolated. The windings of the LIM can be made common if interphase transformers are connected at the output of each bridge.

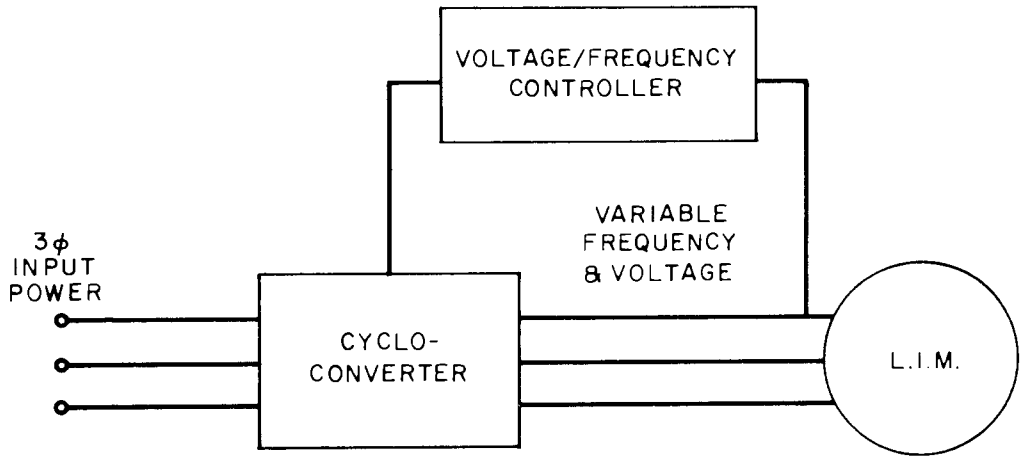

Figure 2.16 Block Diagram of Cycloconverter Power Conditioner

The natural commutated cycloconverter functions as a frequency changer with the constraint that the output frequency be lower than the input frequency. Outputs at higher frequencies can be obtained, but generally the higher frequencies constitute unwanted harmonics rather than a useful output. In practice the output frequency will not be more than about 60 percent of the input frequency.

An inherent characteristic of the cycloconverter is its ability to transmit power from the high-frequency to the low-frequency system or vice versa. This allows for regenerative braking to be applied. Suitable phase angle control of the thyristor switches provides control of the amplitude of the frequency output. A representative controlled single phase output waveshape is shown in Figure 2.18.

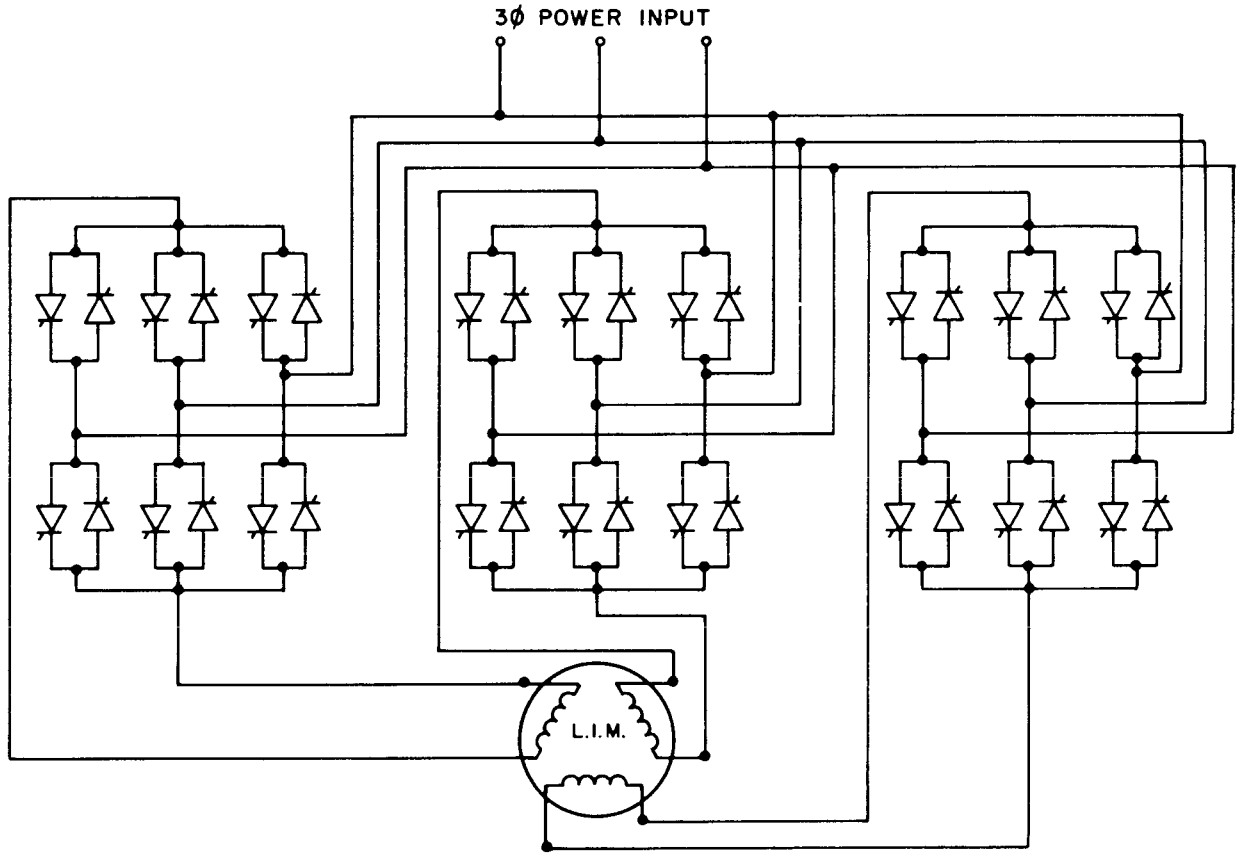

Figure 2.17 Schematic of Natural Commutated Cycloconverter

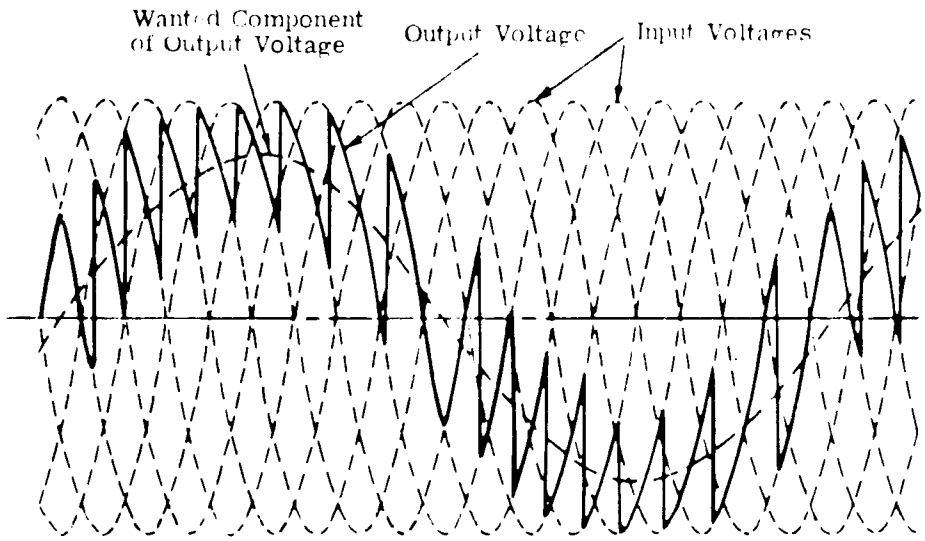

Figure 2.18 Single-Phase Output Voltage Waveform of Natural Commutated Cycloconverter

In considering this type of power conditioner for controlling a LIM, one has to consider a distribution frequency of 600 Hz or higher.

2.4.6.2 Forced Commutated Cycloconverter - A schematic of the forced commutated cycloconverter is shown in Figure 2.19. This power conditioner is similar to the natural commutated type, except that a commutating circuit is connected across each bridge. This commutating circuit permits the thyristor to be commutated independently of the ac supply voltages. By using suitable switching frequencies the output frequency is unrestricted; that is, it can vary above and below the ac supply frequency.

Some output waveforms, illustrating the way in which the output voltage is fabricated, are shown in Figure 2.20. These waveforms illustrate outputs at various frequencies and further

indicate a method of voltage control. The forced commutated cycloconverter can, therefore, be regulated in voltage and frequency by its own internal firing circuits.

As a circuit concept and power conditioning equipment, the forced commutated cycloconverter offers technical advantages particularly if forced turn-off devices such as gate turn off thyristors are developed. Further investigation of this circuit appears to be warranted.

2.5 ROTATING MACHINERY POWER CONDITIONERS

Rotating machinery power conditioners were the only means of electrically driving induction motors in the variable frequency mode, before the development of solid state power conditioners. The motor alternator represents this approach to power conditioning.

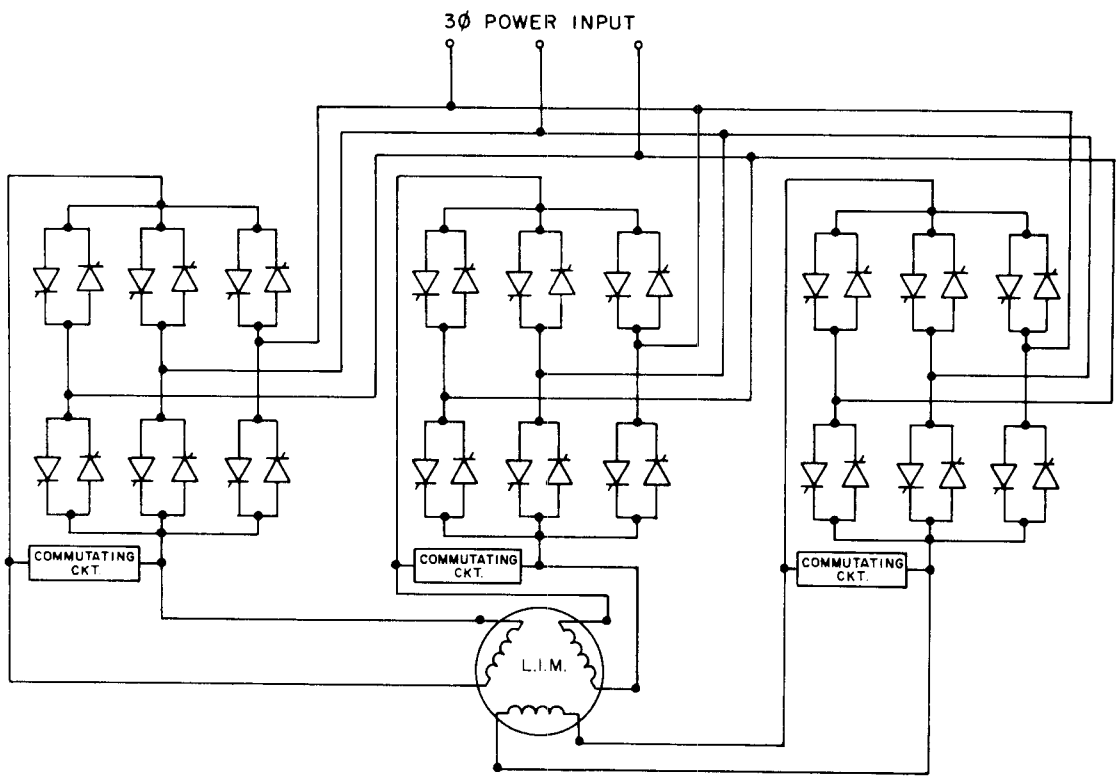

Figure 2.19 Schematic of Forced Commutated Cycloconverter

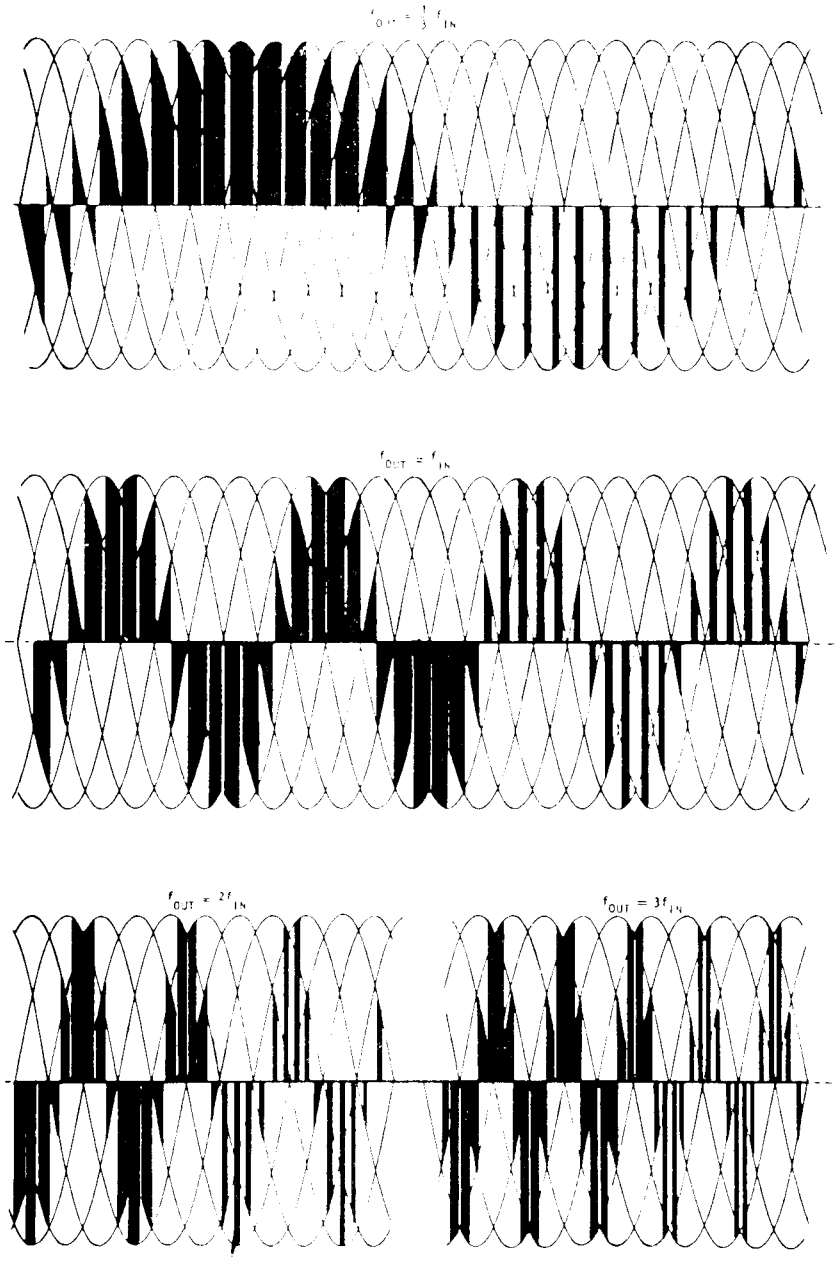

Figure 2.20 Output Voltage Waveforms of Forced Commutated Cycloconverter

2.5.1 Motor Alternators

A block diagram of a motor alternator system is shown in Figure 2.21. This system consists of a voltage controlled ac-to-dc converter, a dc motor, and an ac alternator. A speed controller into the converter controls the frequency into the LIM, and a thrust controller into the alternator controls the voltage across the LIM.

2.5.1.1 Operation in the Thrust Mode - The ac wayside power is converted to a variable and controlled dc voltage that powers a dc motor. The variable and controlled dc voltage is obtained from a thyristor controlled ac-to-dc converter. The output frequency of alternator is directly proportional to its driven speed; hence, by controlling the output voltage of the converter, the excitation frequency to the LIM is controlled. The ac output voltage of the alternator is controlled by varying the alternator dc field.

2.5.1.2 Operation in the Brake Mode - Regenerative braking can be accomplished with this system. In the braking mode the LIM functions as an induction generator. The regenerated power is fed back to the alternator, which now functions as a synchronous motor. This motor must have a leading power factor to extract power from the LIM, since an induction generator cannot supply a lagging power factor load. Leading power factor is achieved in the synchronous motor by over-excitation of its field. The power is now transferred to the shaft of the dc machine.

The dc machine acts as a dc generator, but has its field polarity reversed to deliver an output voltage of opposite polarity. Opposite polarity is required to operate the ac/dc converter in the reverse direction, transferring power back into the wayside lines.

A schematic of the motor-alternator power conditioner is shown in Figure 2.22.

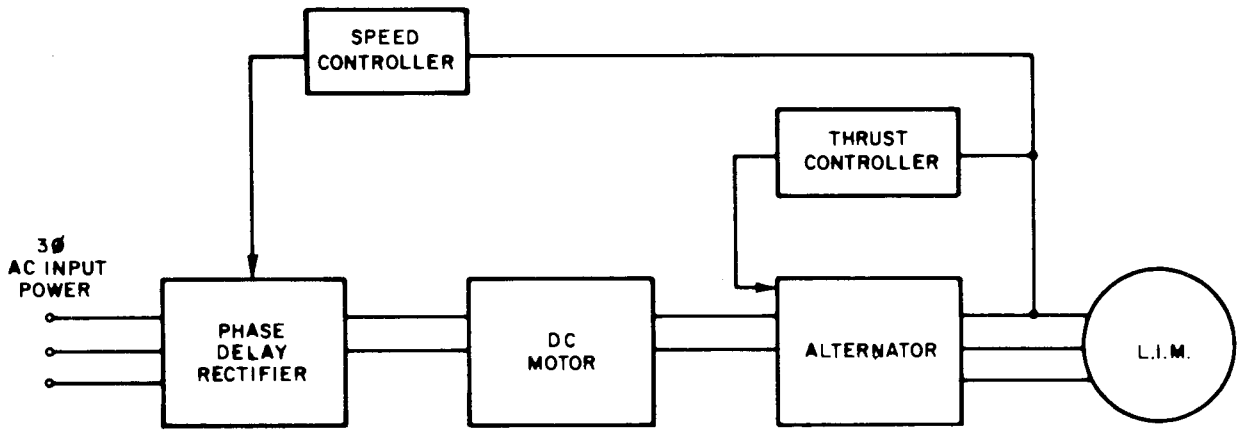

Figure 2.21 Block Diagram of Motor-Alternator Power Conditioner

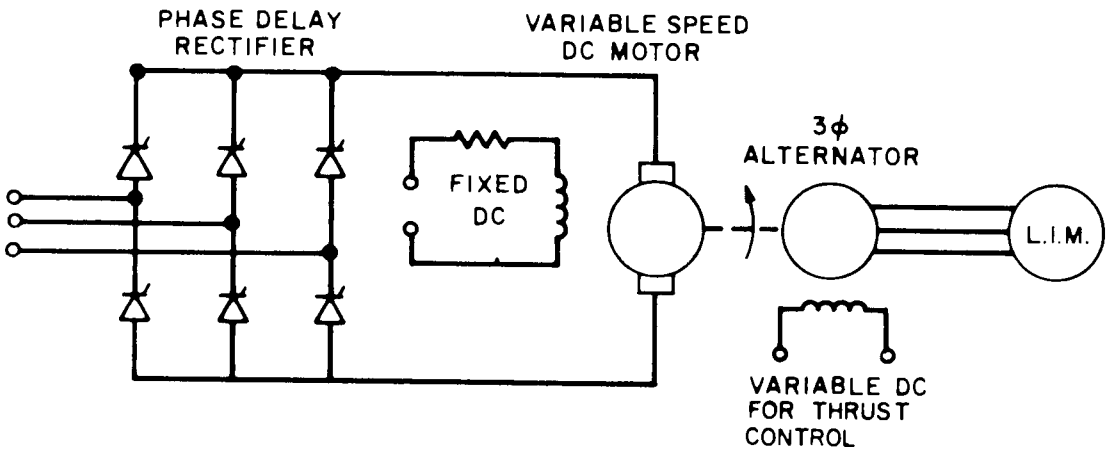

Figure 2.22 Schematic of Motor-Alternator Power Conditioner

2.6 HYBRID POWER CONDITIONERS

Hybrid power conditioners consist of both solid-state and rotating machinery power supplies operating in parallel. The design philosophy of these systems is to use the best features of each machine so that maximum system performance is obtained. The only system of this type that has been developed is the synchronous inverter/synchronous condenser. This system was developed originally for use by the electric utilities in high-power dc transmission lines. The inverters for these systems used mercury arc rectifiers with commutation provided by rotating synchronous condensers. A system using thyristor switches is presently being developed for the Tracked Air Cushion Research Vehicle (TACRV).

2.6.1 Synchronous Inverter/Synchronous Condenser

A block diagram of the system is shown in Figure 2.23. This system consists of a phase delay rectifier, a line commutated inverter, and a synchronous condenser operating in parallel with the inverter. A thrust controller operates into the phase delay rectifier and controls the dc voltage into the inverter. A speed controller operates into the inverter, through the synchronous condenser. Both controls operate to provide variable frequency and voltage into the LIM. The synchronous condenser supplies reactive power to the LIM and also provides the commutation for the inverter. Hence a reactive power control operates into the synchronous condenser.

2.6.1.1 Operation in the Thrust Mode - The ac wayside power is converted to a variable and controlled dc voltage through the phase delay rectifier. This dc power is applied to the inverter with the inverter being commutated by the synchronous condenser. Variable voltage and frequency is applied to LIM. Reactive power to the LIM is supplied by the synchronous condenser. The load net power factor is made leading by the synchronous condenser, since this is a required condition for commutation of the inverter.

2.6.1.2 Operation in the Brake Mode - Regenerative braking can be accomplished with this system. In the braking mode the LIM functions as an induction generator, with the synchronous condenser providing the required excitation. The synchronous inverter operates as rectifier converting the regenerated power to dc. Automatic reversal of the dc polarity is accomplished through the inverter. The phase delay rectifier now operates as a line commutated inverter and the regenerated power is transferred to the 60-Hz bus.

A schematic diagram of the system is shown in Figure 2.24. The phase delay rectifier and the inverter use thyristor switches. A variable dc voltage is obtained from the thyristors by delaying the firing angle. Commutation of the thyristors in the phase

delay rectifier is obtained either through reverse bias of the input line or through forced commutation when another thyristor is turned on. The dc inductor is used for current feeding the inverter.

Since the inverter is not forced commutated, the dc input to the inverter is made into a current source. Commutation is achieved through the voltage differences at the cathodes of adjacent thyristors, and a thyristor is turned off when an adjacent one whose cathode is at a lower potential is turned on. The load phase voltages are instantaneously fixed because of the load's leading power. As a result, an on thyristor is reverse biased when another appropriate thyristor is gated on. Proper operation of the inverter requires that the load look capacitive (leading power factor) so that the commutation mechanism is maintained.

The synchronous condenser is an over-excited synchronous motor. The field of the synchronous motor is controlled to maintain the leading power factor.

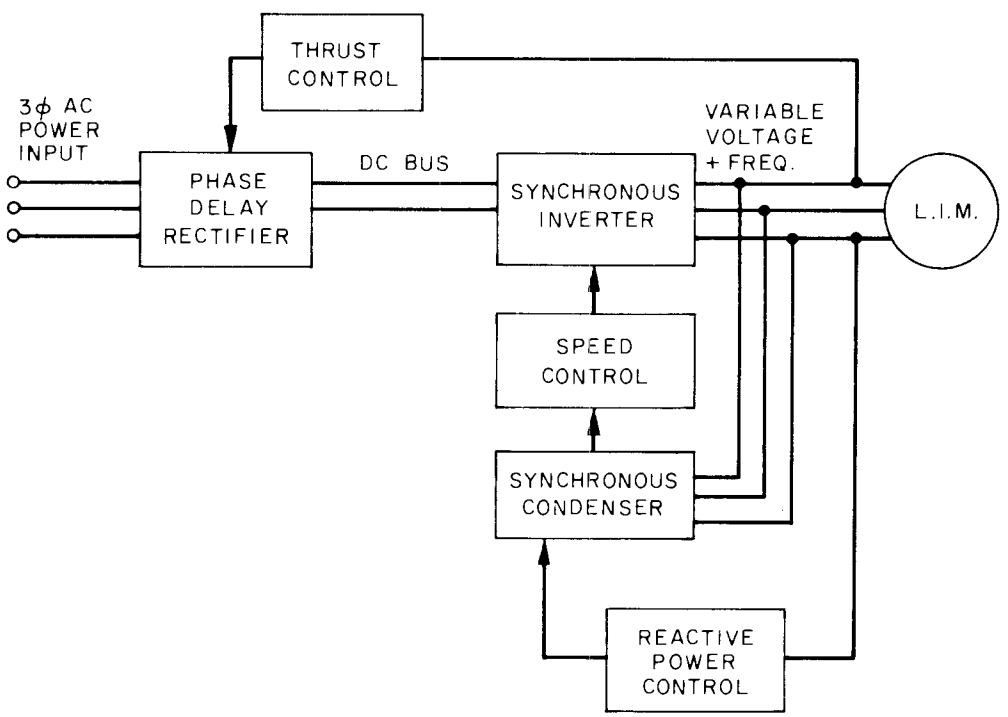

Figure 2.23 Block Diagram of Synchronous Inverter/Condenser Power Conditioner

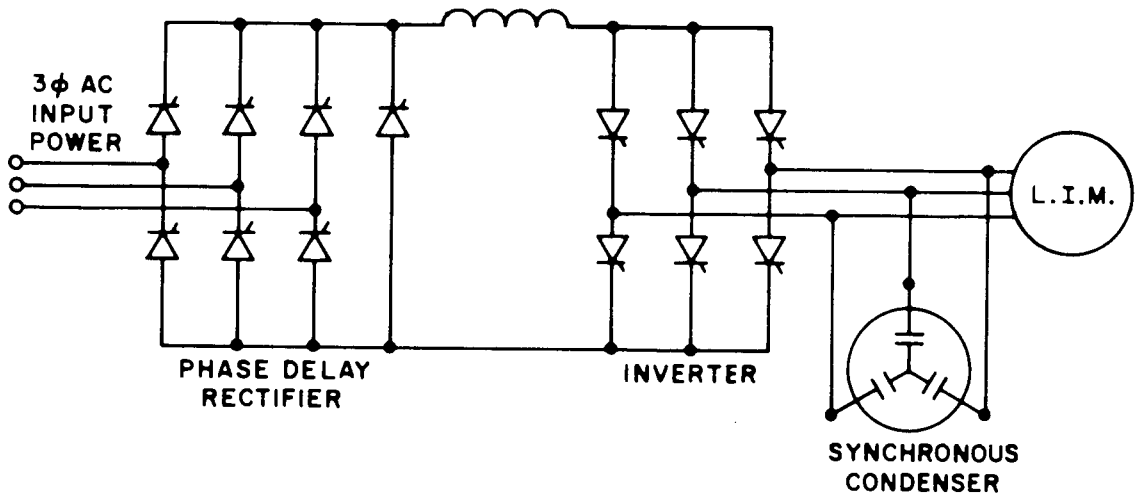

Figure 2.24 Schematic of Synchronous Inverter/Condenser Power Conditioner

At start up, when neither the LIM nor the synchronous condenser are in motion, the leading power factor is not maintained. The commutation of the inverter thyristors is provided by allowing the dc output of the phase delay rectifier to go to zero at the appropriate time. This procedure is followed until the synchronous condenser obtains enough speed to provide the line commutation.

During any power interruption the dc inductor's stored energy is used to power the inverter. The controlled rectifier provides the return current path from the inverter to the inductor at this time.

2.7 CONCLUSIONS OF SURVEY

This section has identified and described candidate power conditioners for driving and controlling linear induction motors in the variable frequency power mode. The power conditioners described have included those for application with either on-board electric power sources or with wayside electric power sources.

2.7.1 On-Board Electric Power Sources/Conditioners

The static electric power sources have not advanced enough in their development to be considered practical for the megawatt power range. Dynamic electric power sources, those which use mechanical energy in the process, are sufficient for megawatt power levels, but the problems of chemical and noise pollution are a serious detriment to their application. The most advanced in development of these approaches is the Brayton gas turbine/alternator currently in use on the DOT LIM Research vehicle. Brayton turbines are also in use on the United Aircraft Turbo Train. The least developed of these systems are the closed-loop Brayton cycle and the Rankine gas turbines which for aerospace application have only developed to the kilowatt power range. Because of the closed-loop nature of the closed-loop Brayton gas turbine the problems of chemical pollution may be alleviated. However, significant development of this approach is still necessary.

2.7.2 Wayside Electric Power Sources/Conditioners

In the solid-state power conditioners, the forced commutated inverters are the most well developed. Size, weight, and performance for these types of inverters have been established. The natural commutated inverter power conditioner has not developed to the same status as the forced commutated approach, and the sizing and performance are not as well established. Naturally, commutated cycloconverters are relatively well developed and are being applied to advanced aircraft electric power systems. Cycloconverters of the natural commutated type require a high distribution frequency to be effective. The problems of distributing power along the wayside at frequencies of the order of 600 Hz are beyond the scope of this program. These problems must be investigated before serious consideration can be given to this power conditioning approach for the LIM.

The forced commutated cycloconverter does not require high frequency power distribution, since this inverter can process variable frequency power above and below the commercial frequency of 60 Hz. This approach has not been developed to the extent that one can establish its feasibility; further investigation of this approach appears to be warranted.

Rotary power conditioners require three major processes: ac to dc power conversion, electrical to mechanical energy conversion, and mechanical to electrical energy conversion. Because of the several processes involved, this approach does not appear to lend itself to a light-weight power conditioner.

The hybrid power conditioner attempts to utilize the best features of the solid-state and rotary machines in order to obtain maximum system performance. The only system of this type that has been developed is the synchronous inverter/synchronous condenser power conditioner. This system has been developed for the DOT Tracked Air Cushion Research Vehicle (TACRV). To date, the synchronous inverter/synchronous condenser is the only power conditioner that has been applied at the power levels required for high speed tracked vehicles.

3.0 TECHNICAL DISCUSSION PART 2 - TECHNICAL EVALUATION OF SELECTED POWER CONDITIONERS

3.1 INTRODUCTION

The power conditioning systems selected for technical evaluation include the motor alternator, the natural commutated inverter, the forced commutated inverter and the synchronous inverter-condenser. These various systems will be described and evaluated in the succeeding sections.

The following format is used in the description and evaluation procedure of each system:

1. System Description - The basic block diagram of each system is described, along with a general description of the major components.
2. System Design - Each major component of the system is analyzed, and the design techniques used in these components are explained.
3. Control System Design - The control method and the design approach are outlined.
4. System Operation - System operation during acceleration, cruise and braking is analyzed.
5. Summary - All the pertinent factors, weight, design, reactive power requirements and the potential of each system for use are summarized.

The characteristics of the Linear Induction Motor are established in order to obtain the electrical requirements for the power conditioners.

3.2 CHARACTERISTICS OF THE LINEAR INDUCTION MOTOR

The Linear Induction Motor provides the propulsion for high speed tracked vehicles. A linear induction motor with the performance characteristics shown in Figure 3.1, is used to

establish the requirements of the power conditioning unit. This particular LIM is a 4,000 hp, 7150 volt line to line, 3 ϕ unit, having a frequency rating of approximately 1 mph/Hz. That is for a 300 mph vehicle speed the LIM would operate at 300 Hz. The specifications for the LIM used for the various power conditioners design are given in Table 3.1. This table shows a continuous thrust rating of 5000 lbs, and an overload thrust rating of 7500 lbs. The operating points for the 5000 lb and 7500 lb thrust cases are marked on the performance curves of Figure 3.1.

TABLE 3.1 SPECIFICATIONS FOR LIM FOR SYSTEM DESIGN[6]

1. Thrust, continuous	5000 lb	(0 to 300 mph)
2. Thrust, overload	7500 lb	(0 to 275 mph)
3. Power, continuous	4000 hp	(300 mph)
4. Frequency	330 Hz	(300 mph)
5. Voltage	7150 V	(line-line)
6. Phases	3	
7. Primary current	530 a	(5000 lb thrust)
8. Power factor	0.58	(5000 lb thrust)
9. Efficiency	80.5%	(5000 lb thrust)
10. Primary current	780 a	(7500 lb thrust)
11. Power factor	0.59	(7500 lb thrust)
12. Efficiency	72%	(7500 lb thrust)

The power, reactive power and MVA input to the LIM for the cruising (100%) and maximum thrust (150%) and power conditions are as follows:

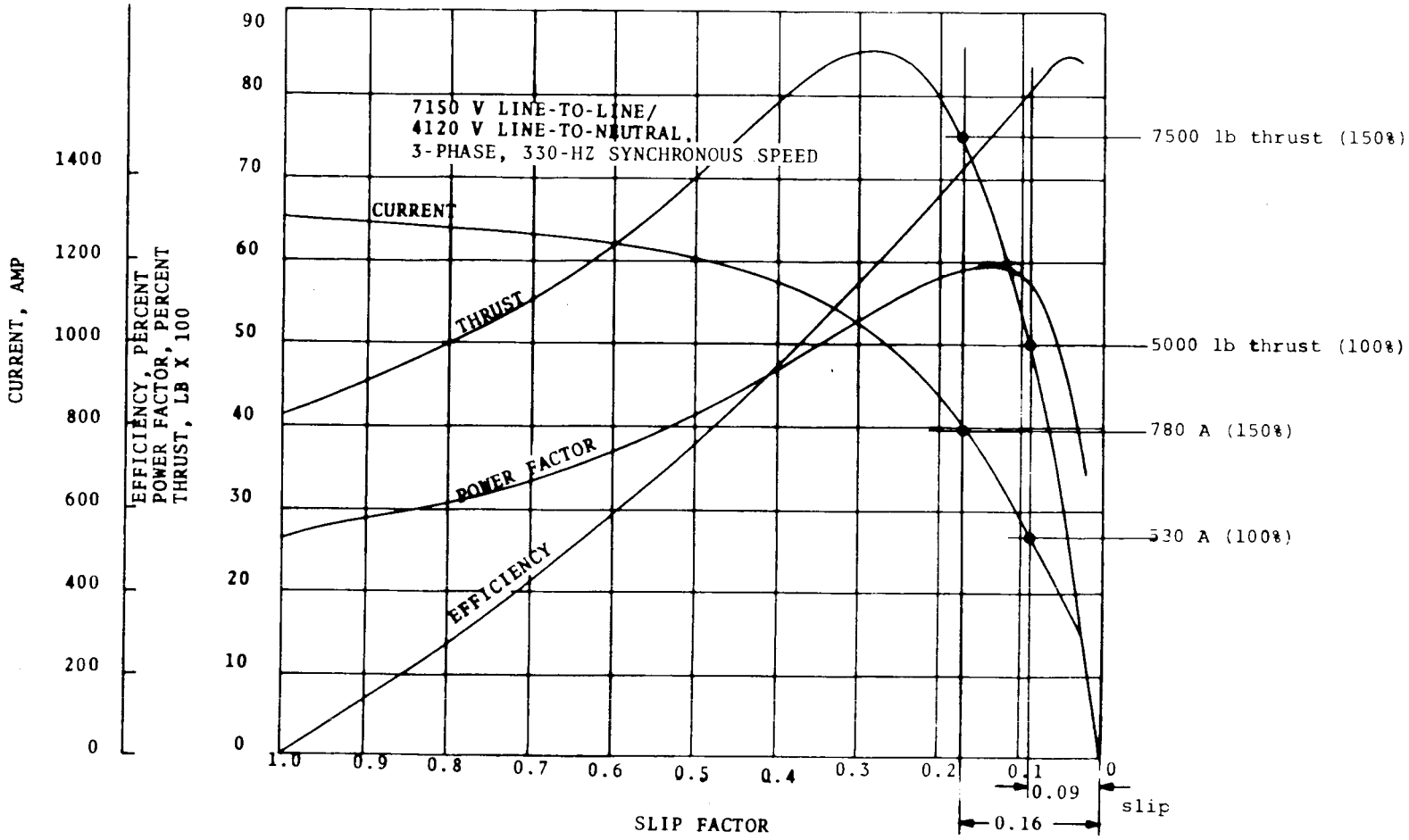

Points for Operation at 100% and 150% Thrust Marked.

Figure 3.1 Performance Curves for 4000 HP LIM

1. Cruising

At 300 mph, 5000 lb thrust, the values are:

$P_L = \sqrt{3} \times 7150 \times 530 \times 0.58 \times 10^{-6} = 3.82$ MW

$Q_L = 3.82 \times (0.81/0.58) = 5.36$ MVAR

$(MVA)_L = 3.82/0.58 = 6.6$ MVA

2. Maximum Thrust and Power

At 275 mph, 7500 lb thrust, the values are:

$P_L = \sqrt{3} \times 7150 \times 780 \times 0.59 \times 10^{-6} = 5.7$ MW

$Q_L = 5.7 \times (0.81/0.59) = 7.8$ MVAR

$(MVA)_L = 5.7/0.59 = 9.65$ MVA

To facilitate the design of both the inverters and the dc filters in succeeding sections of this report, it becomes necessary to obtain the maximum expected load current, power factor, and operating voltage at the lowest frequency of operation. To deliver 150% of rated thrust, the slip must be s = 0.16 (Fig. 3.1) which corresponds to a rail-induced frequency of

$$0.16 \times 330 = 53 \text{ Hz.}$$

Thus, at zero LIM speed, this must be the minimum frequency for 150% thrust. To calculate the load characteristics at the low frequency, we make use of the equivalent circuit data shown in Figure 3.2a for rated frequency of operation (330 Hz in this case). All values are given in pu and for a slip of s = 0.16. Figure 3.2b gives the parameter values modified to 16% of rated frequency and a slip of s = 1.

The desired characteristics are calculated in the following way: First, find the admittance magnitude $|Y_{12}|$ relating the secondary current I_2 to the LIM input voltage V_L at 330 Hz and s = 0.16:

$$(I_2)_{330} = |Y_{12}|_{330} \; (V_L)_{330} \text{ at } s = 0.16 \qquad (3.1)$$

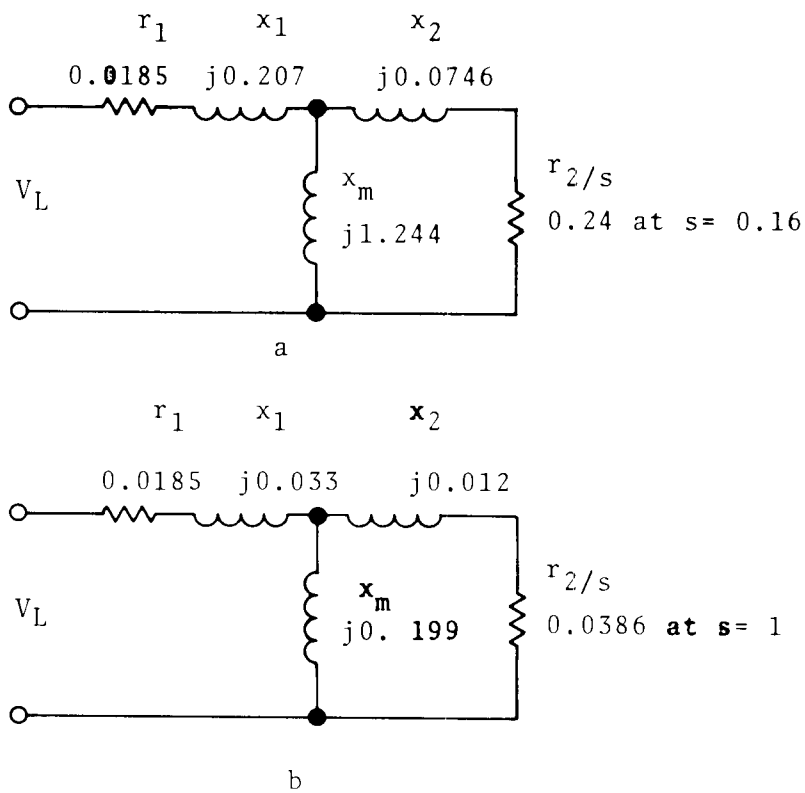

Figure 3.2 Equivalent Circuit for LIM Operation at (a) 330 Hz and (b) 53 Hz

Repeat the calculation at 53 Hz and s = 1:

$$(I_2)_{53} = |Y_{12}|_{53} (V_L)_{53} \text{ at } s = 1. \tag{3.2}$$

Assume then that the secondary current must be equal in magnitude at the two frequencies to produce the same thrust, giving

$$(V_L)_{53} = \frac{|Y_{12}|_{330}}{|Y_{12}|_{53}} (V_L)_{330} . \tag{3.3}$$

The input current and PF can be calculated by combining the following expressions:

$$(I_L)_{330} = (Y_{IN})_{330}(V_L)_{330} \tag{3.4}$$

and

$$(I_L)_{53} = (Y_{IN})_{53} \times k_V(V_L)_{330} , \tag{3.5}$$

giving

$$(I_L)_{53} = k_v (I_L)_{330} \frac{(Y_{IN})_{53}}{(Y_{IN})_{330}} \tag{3.6}$$

and the power factor

$$(pf)_{53} = \cos \angle (Y_{IN})_{53} \quad . \tag{3.7}$$

Use of Figure 3.2 and complex arithmetic yield

$$\left| Y_{12} \right|_{330} = 2.574 \text{ pu at } s = 0.16$$

and

$$\left| Y_{12} \right|_{53} = 12.832 \text{ pu at } s = 1 \quad ,$$

giving

$$(V_L)_{53} = \frac{2.388}{12.832} = 0.186 \ (V_L)_{330}$$

$$= 1330 \text{ V} \ ,$$

or 18.6% of rated voltage at rated frequency. Use of both Figure 3.2a and 3.2b yields

$$(Y_{IN})_{330} = 2.574 \ \angle -54.5° \text{ at } s = 0.16$$

and

$$(Y_{IN})_{53} = 13.828 \ \angle -44.32° \text{ at } s = 1.$$

Using the given current of 780A at 330 Hz and s = 0.16, we get

$$(I_L)_{53} = 0.186 \times 780 \ \frac{13.828}{2.579} = 780\text{A at } 0.71 \text{ PF.}$$

3.3 DC MOTOR-ALTERNATOR POWER CONDITIONER

3.3.1 Introduction

This section describes one of the several drive systems available to provide power from a wayside power rail for a LIM-driven vehicle. The system is a dc motor-alternator combination for obtaining adjustable-frequency power for the LIM. The design data, operating profile, and weights are provided for both a conventional and an advanced design.

The dc-motor driven alternator set provides a basic adjustable-frequency power source for the LIM using standard, already-designed components, in a proven arrangement. An alternative set using a brushless dc motor represents a lighter weight version; the specific advantages are listed.

3.3.2 System Description

The dc motor-alternator system is illustrated in Figure 3.3 An adjustable speed dc motor drive system, consisting of a phase-delayed rectifier, thyristor trigger control circuits and a field excitation supply, is used to drive the alternator to provide a wide range of voltage and frequency for the LIM. The frequency of the alternator is proportional to the shaft speed and is therefore

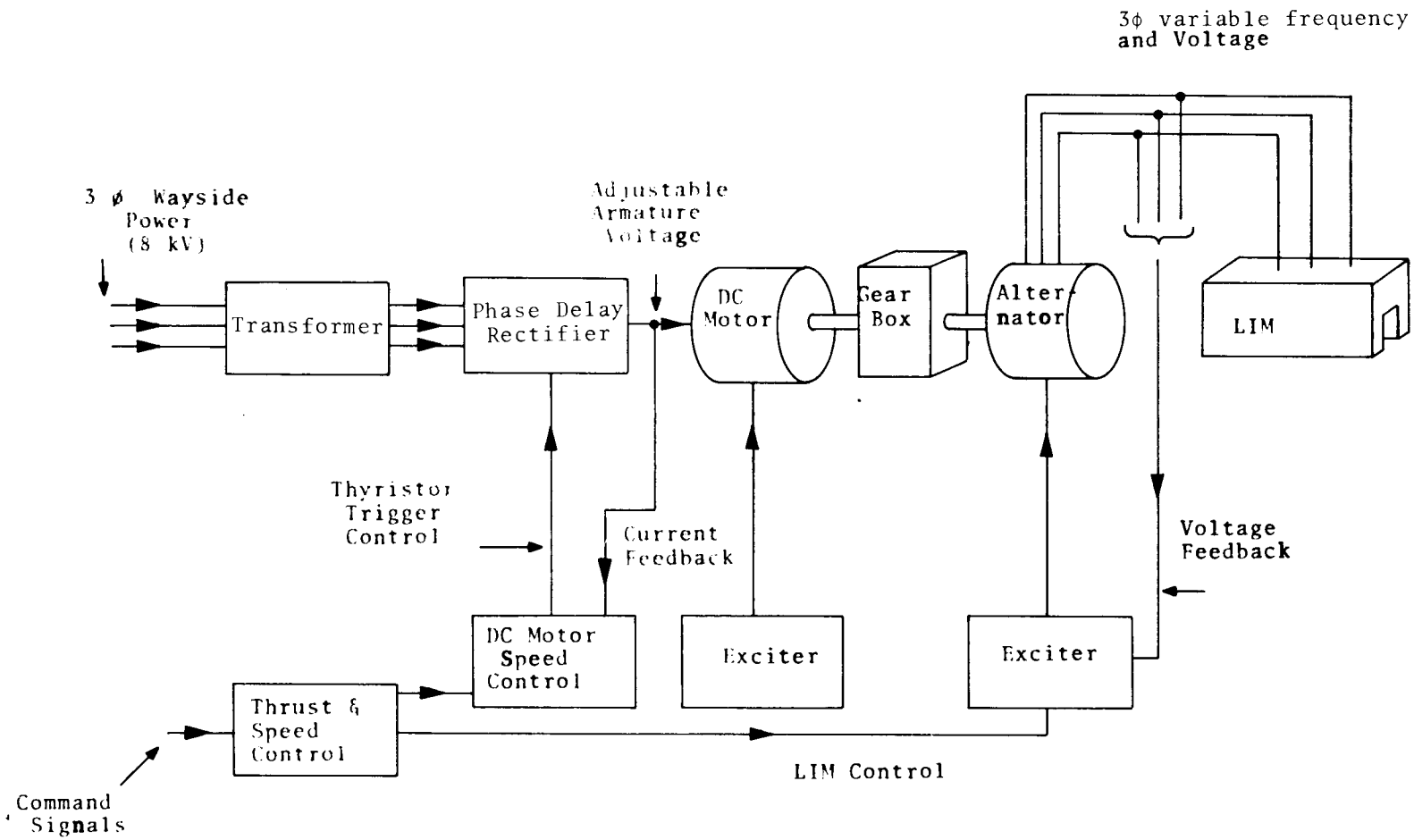

Figure 3.3 Motor-Alternator LIM Drive System

directly controlled by the speed of the dc motor. However, the alternator output voltage is a function of both speed and loading and must be controlled by an adjustable field exciter controlled in a feedback loop to maintain constant air-gap flux density and to maximize the LIM thrust per ampere. A control system provides both speed (frequency) and voltage command signals to the machines to operate the LIM at the predetermined thrust or speed.

A gear box is indicated in Figure 3.3 between the dc drive motor and the alternator; an input power transformer is also shown. Both of these elements are undesirable due to their significant weight; the gear box is made necessary by the extremely low speed at which large dc motors are built, and the transformer is required to provide the required operating voltage of the dc motor. Both dc motor characteristics are limited by the commutator.

To accelerate the vehicle with this drive system, the phase delay rectifiers are controlled to produce an increasing armature voltage. When a desired LIM frequency and thrust has been reached to produce a maximum starting acceleration, the armature voltage is increased (more slowly from this point on) proportionally with the speed of the vehicle. Regenerative braking is readily obtained by reversing the excitation of the dc motor, retarding the firing angle of the rectifier into the inverter domain, and maintaining the alternator frequency low enough to cause the LIM to act as an induction generator. The rectifier then works as a "line commutated" inverter which pumps the kinetic energy of the vehicle from the LIM through the two rotating machines back to the wayside power system.

The advantages of the dc motor-alternator drive system are the basic simplicity and straightforward operational control, as well as the high reliability of all its parts. The main disadvantages, which will become apparent, are the weight and bulk of the rotating machines, the gear box and the input transformer.

3.3.3 System Design

A system, which utilizes a 5000 lb thrust LIM previously described, will be designed for a 300 mph vehicle. In the next section, the manner in which the pertinent currents and voltages vary over the cycle of acceleration, cruise, and deceleration will be described. Finally, a total and specific weight analysis will be carried out and the results tabulated.

3.3.3.1 Alternator - The alternator must supply the requirement for the LIM. The requirements are tabulated in Table 3.2

TABLE 3.2 ALTERNATOR SPECIFICATIONS FOR SYSTEM DESIGN

	Cruising	Max. Power
1. Voltage (line-line)	7.15 kV	7.15 kV
2. Current	530A	780A
3. Power	3.97 MW	5.7 MW
4. Reactive power	5.35 MVAR	7.8 MVAR
5. MVA	6.6 MVA	9.65 MVA
6. Field power[1]	132 kW	280 kW
7. Field current[2]	264A	385A
8. Efficiency (without field power)	94%	94%
9. Drive power	4.23 MW	6.08 MW
10. Drive Power	5,675 hp	8,125 hp
11. Frequency	330 Hz	330 Hz
12. Speed[3]	6600 rpm	6600 rpm

Notes

1. Assume nominal field power is 2% of MVA rating and is supplied from a static source

   Assume 500 V nominal field voltage

2. Assume field current increases proportional to reactive power

3. Assume 6 pole machine

3.3.3.2 Gear Box - The maximum speed of the dc drive motor is 150 rpm. The required gear ratio is thus 6600/150 = 44. Since the cube root of 44 is 3.5, the requirement can be met with a three-stage gear box. A typical per stage efficiency is 98%, so that the overall gearbox will have an efficiency of 94%. The actual gearbox used in the weight calculations consists of two separate units connected in tandem. The power input to the gear box at 150 rpm is tabulated below:

(1) Cruising, input power = 4.43 MW/0.94 = 4.5 MW

= 5,675 hp/0.94 = 6,050 hp

(2) Max. Power, input power = 6.08 MW/0.94 = 6.45 MW

8,125 hp/0.94 = 8,650 hp

3.3.3.3 Dc Motor - The dc motor is assumed to be rated for 150 rpm and an armature voltage of 1000 V. These parameters are maximum values for standard machines of this rating. The rated efficiency at nominal load is 90%, of which 2% is field excitation losses. The field power will be supplied from a non-rotating source; the nominal field voltage is assumed to be 500 V. The requirements for the dc motor are presented in Table 3.3.

TABLE 3.3 SPECIFICATIONS FOR THE DC MOTOR FOR SYSTEM DESIGN

	Cruising	Max. Power
1. Armature Voltage	1000 V	1010 V
2. Shaft power	4.5 MW	6.45 MW
	6,050 hp	8,650 hp
3. Efficiency (without field loss)	92%	92%
4. Armature power	4.9 MW	7.0 MW
5. Armature current	4,900A	6,925A
6. Field power	98 kW	102 kW
7. Field Current	146A	200A
8. Speed	150 rpm	150 rpm

3.3.3.4 Rectifier and Transformer - The rectifier circuit consists of four thyristor bridge assemblies connected as shown in Figure 3.4. The rectifier transformer will have four secondary windings. The bridges will be connected in series pairs for sequential control and the two pairs in parallel to supply the required current. Each element in each bridge will consist of the required number of parallel thyristors for the current.

The active-reactive power diagram for the rectifier and transformer in sequential control is shown in Figure 3.5. The reactive power at starting is 0.3 pu of 7.5 MVA and reaches 0.6 pu at half speed. The figure is drawn in per unit so that 1.0 pu = 5 MVA for cruise and 7.5 MVA for deceleration or acceleration at 150% thrust.

The firing angle control of the rectifier must handle the full forward and regenerative range of armature voltage, the full range of load current and the variation of system voltage. The worst case demand for voltage occurs at 150% thrust, the overload condition and -5% internal system voltage. A calculation of the dc and ac system voltage drops for worst case load is required to determine the transformer rating. The one-line diagram for the assumed supply system is shown in Figure 3.6. The calculation is shown in Table 3.4.

Table 3.4 CALCULATION OF VOLTAGE LEVELS FOR WORST CASE LOAD[1]

1.	Dc Motor armature voltage	1010V
2.	Bus bar voltage drop, assumed 0.01 pu[2]	14
3.	Thyristor drop, assumed 1.5V each, four in series	6
4.	Overlap angle, 0.06 pu	84
5.	Firing angle, minimum of α = 10°, cos 10° = 0.985	15
6.	Transformer	18
7.	System, P = 1.5 pu, Q = 0.45 pu	60
8.	No-load dc voltage for α = 0°, total	1207V
9.	Transformer secondary voltage, item (8), 604/1.35 =	448V
10.	Transformer secondary voltage, item (8) conditions, + 5% supply voltage	494V

Notes

1. At 150% thrust, 6,925A armature current, system voltage - 5%
2. On 5 MW base, corresponding to 5,000A

The transformer rating is given by the product of the no-load secondary voltage and the rms current corresponding to the cruise condition. The average current for each bridge is 4900A/2 = 2450A. The rms transformer current is 2450A X $\sqrt{2/3}$ = 2000A. The rating of each secondary winding is thus,

$$\text{secondary rating} = \sqrt{3} \times 494 \text{ V} \times 2000 \text{ A} = 1.72 \text{ MVA}$$

$$\text{four windings, rating} = 4 \times 1.72 = 6.88 \text{ MVA}$$

The primary winding can be based on a current waveform which is essentially sinusoidal. The total rms current is then reflected to the secondary,

$$\text{reflected primary current} = 4900\text{A} \times 0.78 = 3820\text{A}.$$

The primary rating is thus

$$\text{primary rating} = \sqrt{3} \times 988 \text{ V} \times 3820\text{A} = 6.52 \text{ MVA}.$$

The actual nominal primary transformer voltage is 8 kV.

3.3.3.5 Component Weights - The component weights have been estimated and placed in Tables 3.5 and 3.6. The sources of the data and the reasoning used to arrive at the final figures are given in the following sections.

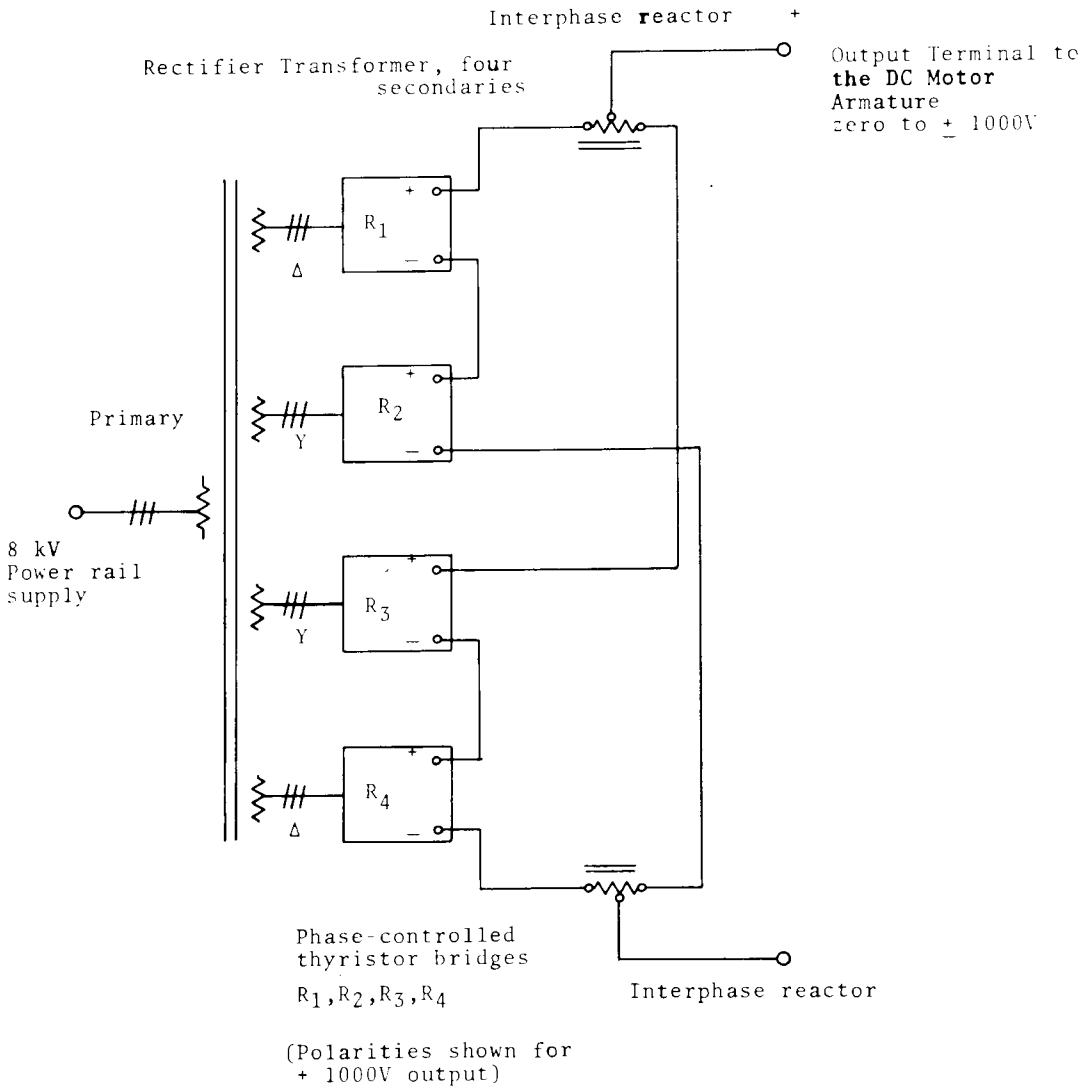

Figure 3.4 Rectifier Connection for Sequential Control and Two Parallel Sections

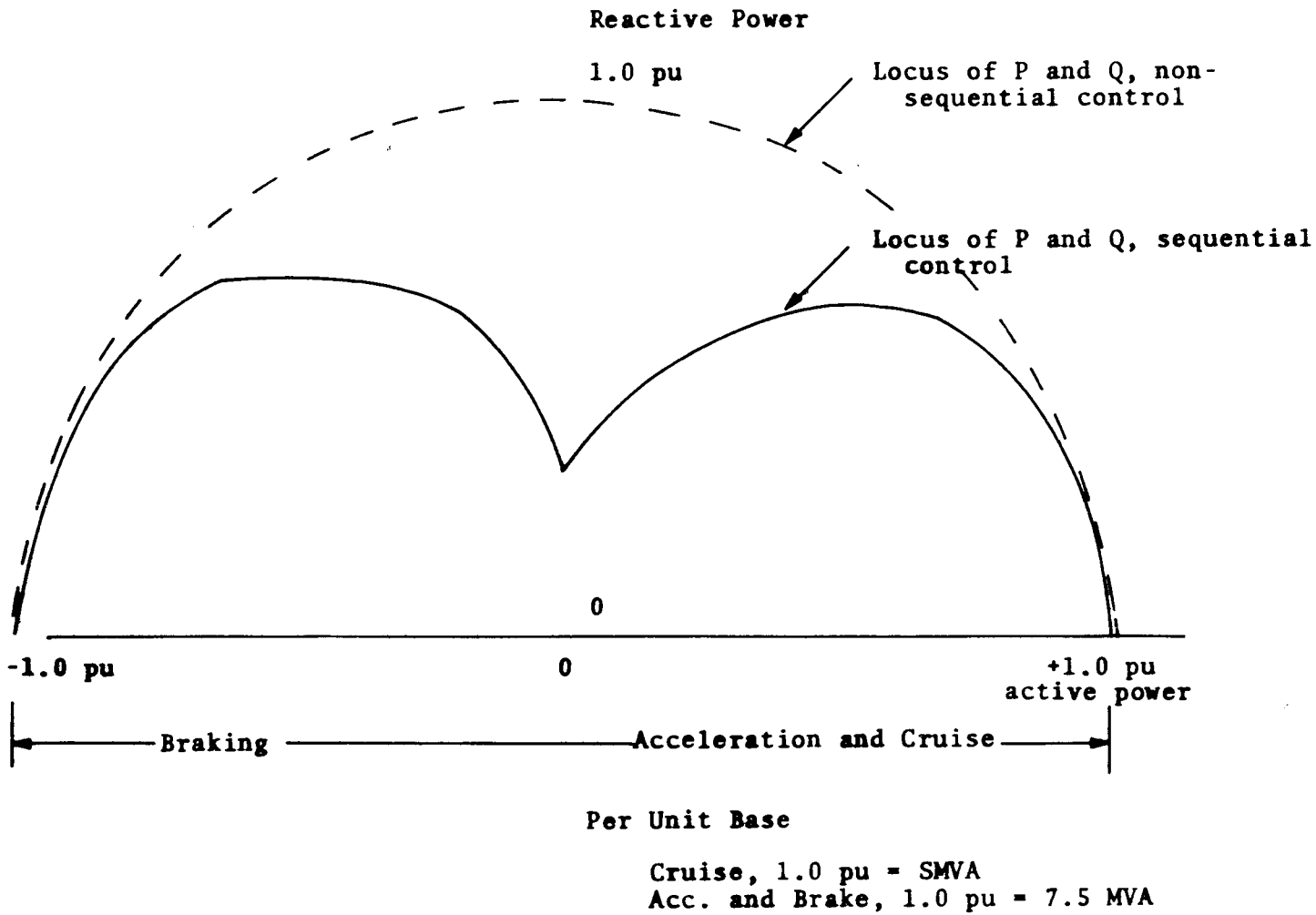

Figure 3.5 Active and Reactive Power Relationship for Input to Transformer and Rectifiers Under Sequential Control

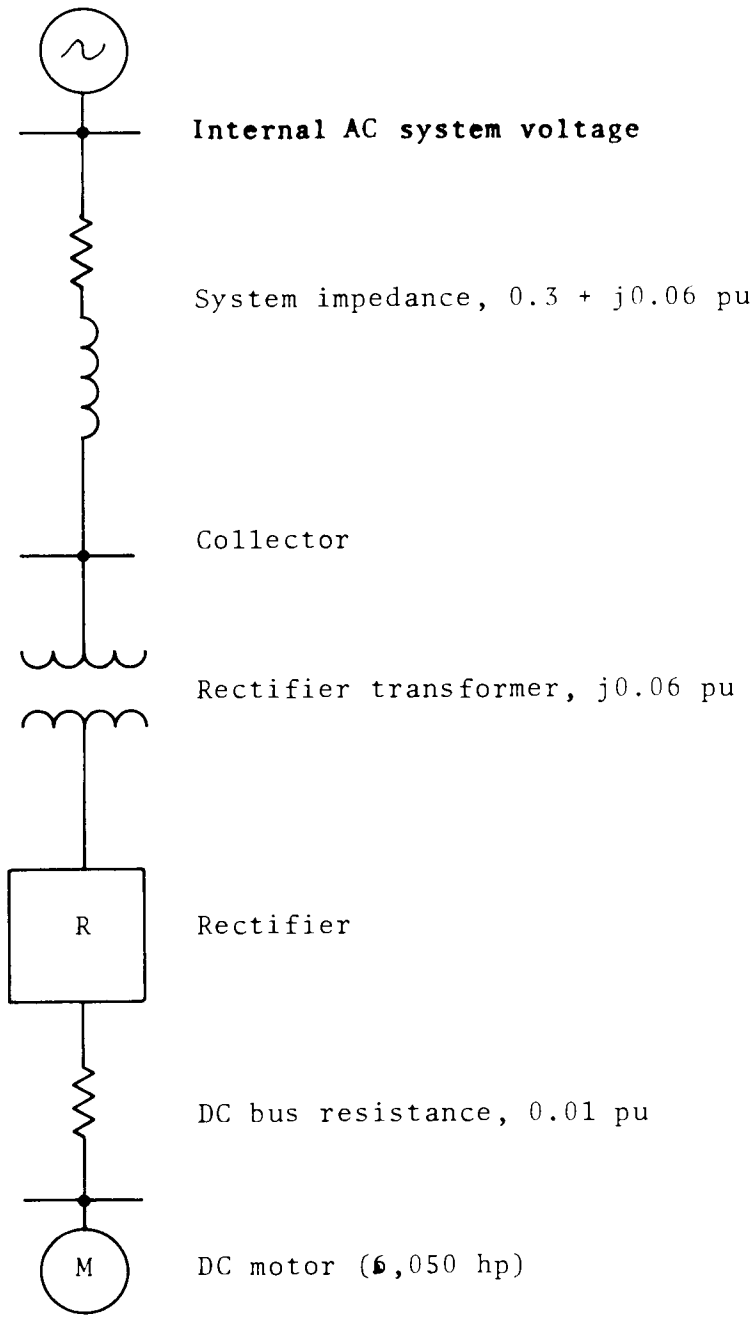

Impedance on 5 MVA base

Figure 3.6 One-Line Diagram of Rectifier Supply System

TABLE 3.5 WEIGHT OF COMPONENTS FOR A DC MOTOR-ALTERNATOR DRIVE SYSTEM FOR ONE 4000 HP LIM USING CONVENTIONAL DESIGN

Component	Specification (Cruise)[1]	Specific Weight	Weight
Alternator[2,4]	6.6 MVA, 3.97 MW, 0.6 pf, 7.15 kV, 330 Hz, 6600 rpm	3.33 lb/kW	13,250 lbs
Gear Boxes[3]	5,675 hp, 4.23 MW, 150/870 rpm, 870/6600 rpm	0.36 lbs/kW 1.14 lbs/kW	1,500 lbs 4,800 lbs
DC Motor[2,4]	6,050 hp, 4.5 MW, 150 rpm, 1000 V, 4900A	8 lbs/kW	36,000 lbs
Rectifiers[2]	1000V, 4900A, 4.9 MW Four bridges, series-parallel, sequential	0.49 lb/kW	2,400 lbs
Transformer[2]	6.5 MVA, 8 kV primary, four secondaries rated 494V line 1.72 MVA each	3.25 lb/kW	21,000 lbs
Total		17.3 lb/kW	78,950 lbs

Notes

1. All components must have a 150% rating for 1 minute for acceleration and braking
2. Forced air cooled
3. Oil lubricated and cooled
4. Field supplies and controls not included

TABLE 3.6 WEIGHT OF COMPONENTS FOR A BRUSHLESS DC MOTOR-ALTERNATOR DRIVE SYSTEM FOR TWO 4000 HP LIM'S USING ADVANCED DESIGN CONCEPTS

Components	Specification (Cruise)[1]	Specific Weight	Weight
Alternator[2,3]	6.6 MVA, 3.97 MW, 0.6 pf, 7.15 kV, 330 Hz, 6600 rpm	1.67 lb/kW	6,625 lbs
Gear Box	5,675 hp, 4.23 MW, 870/6600 rpm	1.14 lb/kW	4,800 lbs
Brushless dc Motor[2,3]	6,050 hp, 4.5 MW, 870 rpm, 8 kV operation from converter	2.5 lb/kW	11,250 lbs
Converters[2]	8 kV line to 8 kV motor; 4.9 MW, 12 bridges, four per phase	0.3 lb/kW	1,470 lbs
Total		5.61 lb/kW	24,145 lbs

Notes

1. All components must have 150% rating for 1 minute for acceleration and braking
2. Liquid cooled
3. Field supply not included

3.3.3.5.1 Alternator - The alternator is rated 6.6 MVA, 7.15 kV, 300 Hz, 6600 rpm, and does not correspond to any "standard" power system equipment. It would be roughly equivalent in size to a 3.8 MVA, 60 Hz, 3600 rpm, turboalternator. Two values of equivalent machines from the Westinghouse report[5] are,

1. Fig. 3.2-2. 6000 kW, 3600 rpm, 60 Hz, 12 lb/kW, 72,000 lbs
2. Fig. 3.2-3 10,600 kW, 8000 rpm, 400 Hz, 7 lb/kW, 74,000 lbs

On this basis, the specific weight of the LIM alternator would be 5.5 lb/kVA. Using modern insulating materials, a well-designed air-cooling system, and modern magnetic materials, the current

density can be doubled, and the magnetic flux density increased by about 20%, so that the specific weight can be reduced to about 2.0 lb/kVA. On a per kW basis, the specific weight would be 3.33 lb/kW at 0.6 pf. Using liquid cooling, the specific weights can be again halved to 1.0 lb/kVA, 1.67 lb/kW.

3.3.3.5.2 Gear Box - Commercial gear box weights are obtained for two separate units. The required overall ratio is 150 rpm to 6600 rpm; the information below is for a ratio of 145 rpm to 5200 rpm. The source is the Philadelphia Gear Company.

1. PS No. 22HP1, 145/870 rpm, 0.98 eff., 1500 lbs.
   88 in. wide X 80 in. high X 85 in. long
2. HS No. 230-12, 870/5200 rpm, 0.985 eff., 4800 lbs.
   88 in. wide X 76 in. high X 69 in. long

The cruise power delivered to the alternator is 5675 hp, or 4.23 MW. The overall specific weight for the gear boxes is 6,300 lbs/ 4230 kW = 1.5 lbs/kW.

3.3.3.5.3 Dc Motor - The NEMA Standards for large dc motors show that an 8000 hp motor can be operated from a base speed of 110 rpm to a speed of 190 rpm. We will assume that the 6,050 hp motor for the drive system can be built for operation at 150 rpm and that the motor can be built for 6 lb/hp or 8 lb/kW. Therefore, the total weight of the motor is 4500 kW X 8 lb/kW = 36,000 lbs.

3.3.3.5.4 Rectifiers - The weight of the rectifier equipment will be based upon the use of four bridges in which, under cruise conditions, each element carries an average current of 1/6 X 4900A = 817A. Each bridge element is assumed to weigh 100 lbs and will consist of one or more thyristors, air-cooled heat sinks, and the share of the frame. The overall rectifier weight is 100 lbs X 4 bridges X 6 elements = 2400 lbs. The specific weight is

$$2400 \text{ lbs}/4900 \text{ kW} = 0.49 \text{ lbs/kW}$$

With liquid cooling, the specific weight can be reduced to one half the above value, or 0.25 lb/kW.

3.3.3.5.5 Transformer - The transformer is a three-phase, air-cooled unit. The primary is rated 8.0 kV nominal; the four secondary windings are rated 494V line-to-line at 2000A, or 1,720 kVA each. The primary winding is rated 6.5 MVA. Typical transformer data, as presented by Hevi Duty Electric Co., Cat. No. 1, 1968, p. 33, shows a 5000 kVA, air-cooled, class H or F transformer, at 4 lbs/kVA. Assume the factor of scale and special design reduces the specific weight to 3.25 lbs/kVA. The total weight is thus

$$6{,}500 \text{ kVA} \times 3.25 \text{ lb/kVA} = 21{,}000 \text{ lbs.}$$

A liquid-cooled transformer will have about one-half the specific weight of an air-cooled unit.

3.3.4 System Operation

The manner in which the system shown in Figure 3.3 operates over a cycle of acceleration, cruise, and braking is shown in Figures 3.7, 3.8, and 3.9.

3.3.4.1 Acceleration - The vehicle is assumed to accelerate from standstill to 300 mph with a thrust of 7500 lbs. The operation of the rectifier and dc motor is shown in Figure 3.7. Initially, the field current of 200A is applied to the dc motor, the ac switchgear is closed, and the rectifier firing angle is advanced from $\alpha = 90°$, zero dc voltage, toward $\alpha = 0°$ for full dc voltage. Armature current starts and quickly reaches 6900A, where it is current limited for the acceleration period. The motor accelerates toward its top speed of 150 rpm. When it reaches that point, the firing angle control is assumed by the speed regulator, but is limited to 10° or more.

The field current of 385A is initially applied to the alternator. As the alternator starts to rotate, the terminal voltage

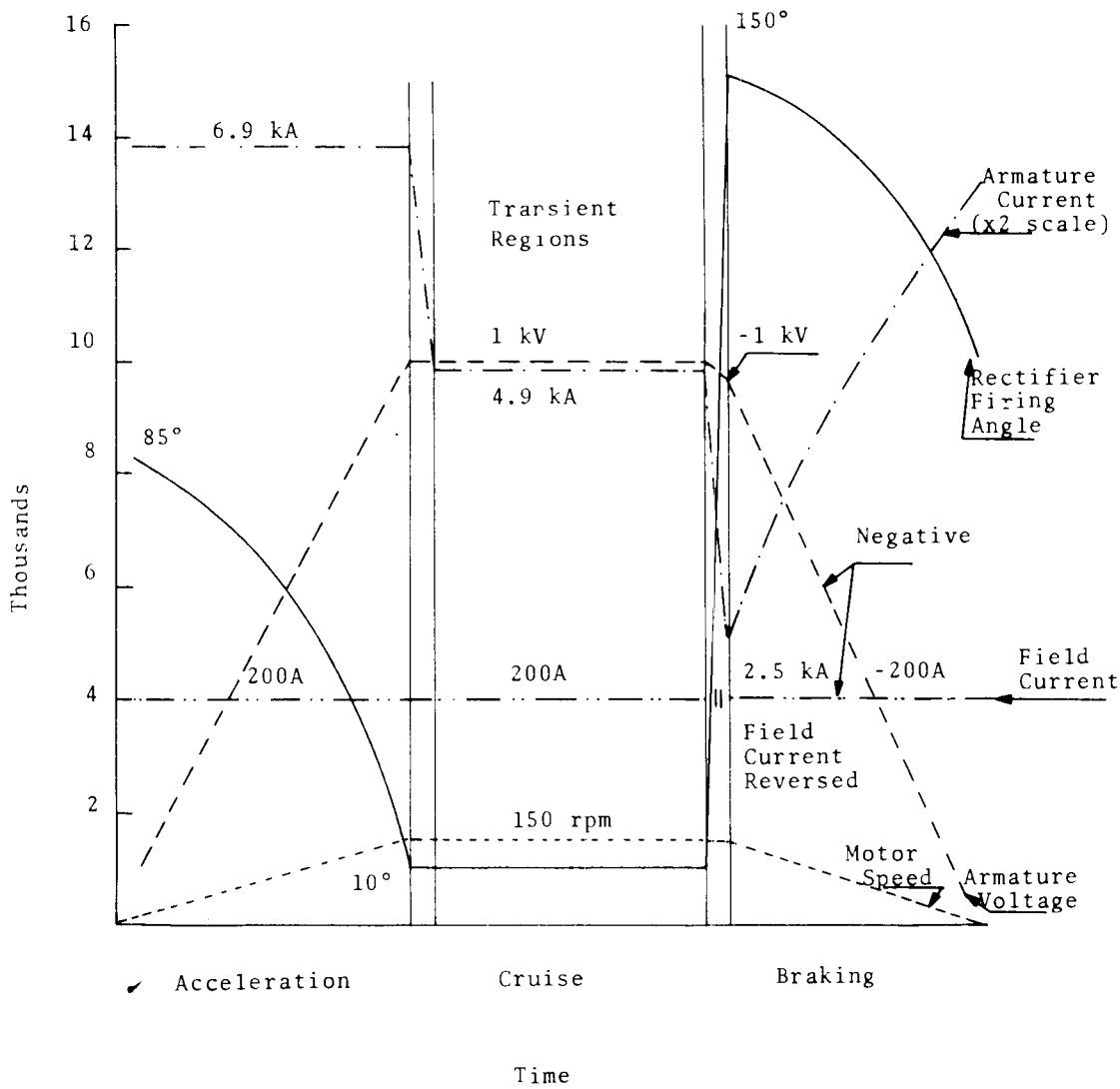

Figure 3.7 Operation Profile of the Rectifier and Dc Drive Motor

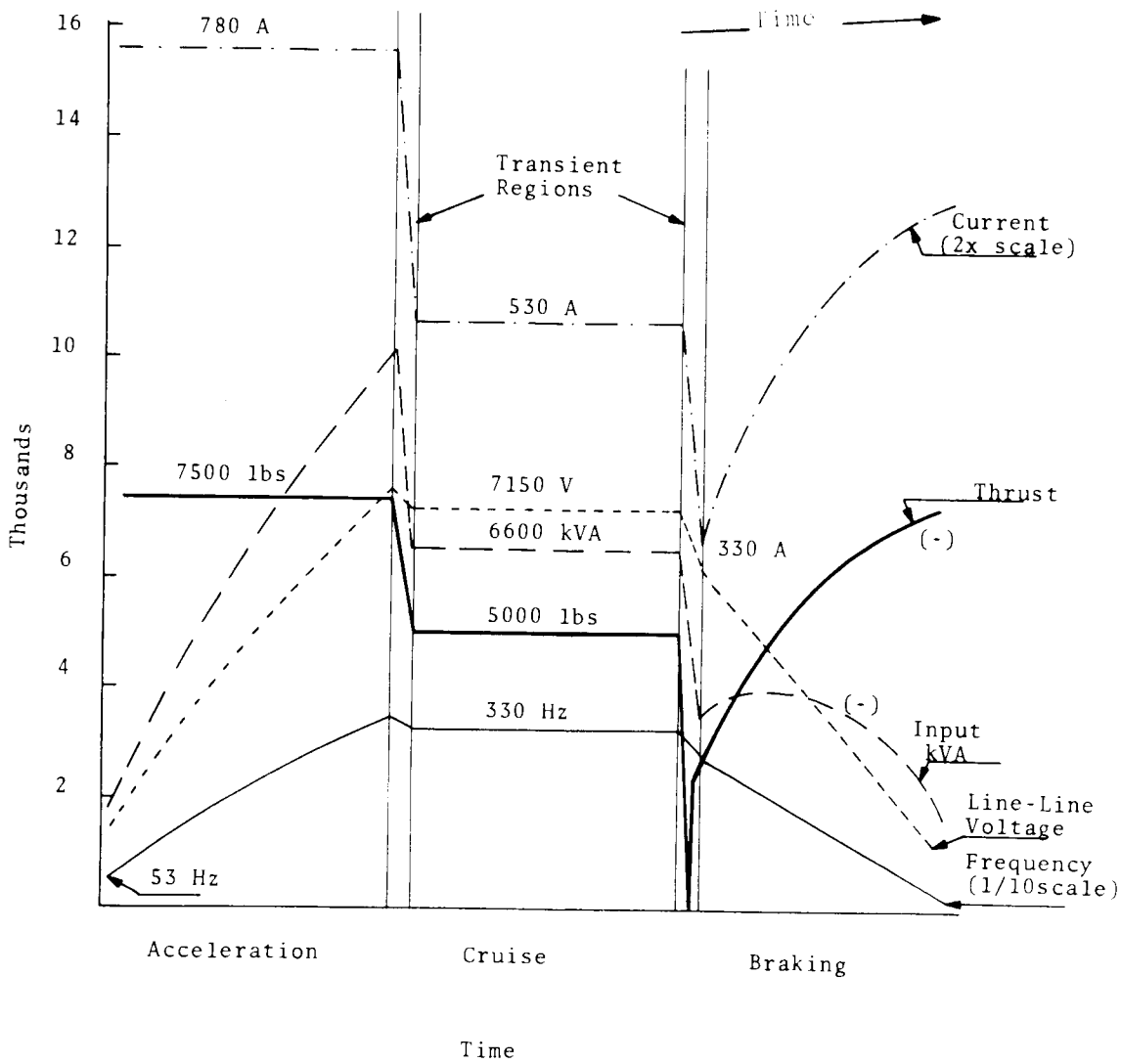

Figure 3.8 Operation Profile of the LIM

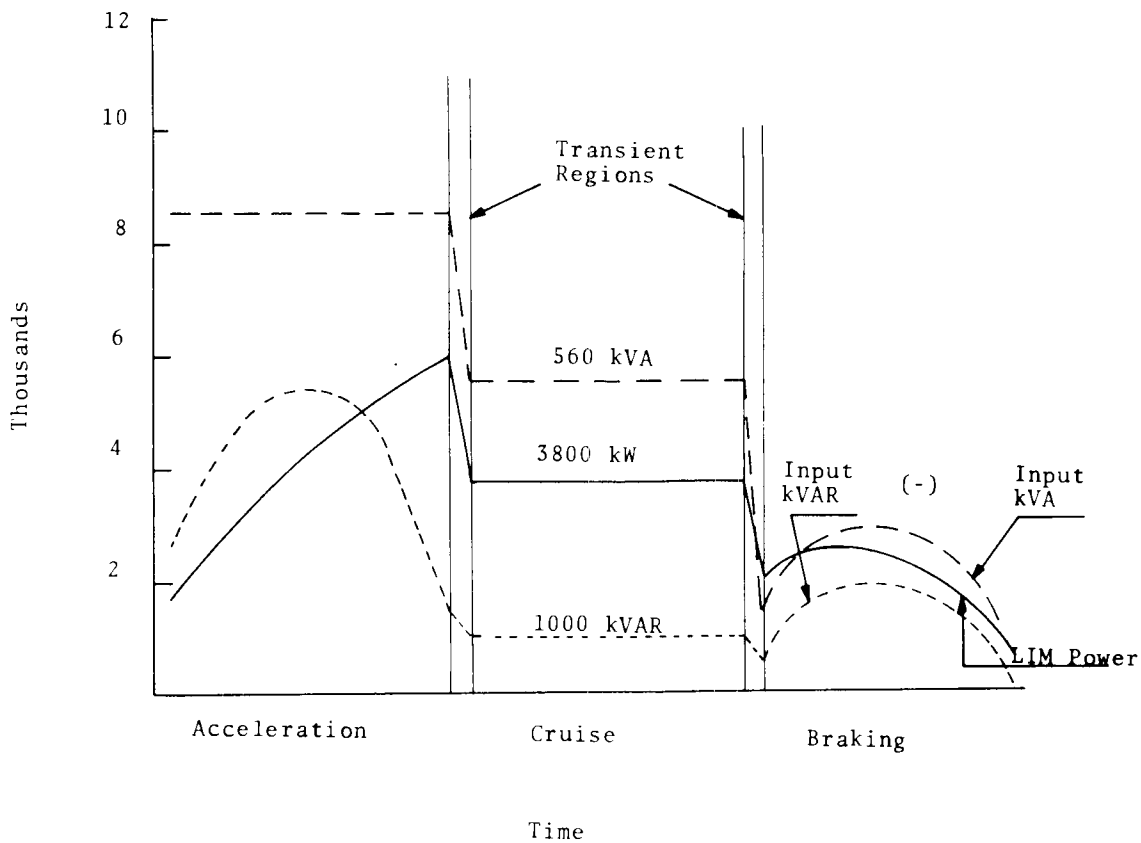

Figure 3.9 Drive System Input kVA and kVAR Profiles with the LIM Real Power as Comparison

rises proportional to speed and frequency as shown in Figure 3.8. The current reaches 780A corresponding to a thrust of 7500 lbs and the vehicle starts to accelerate. The current is limited during the starting period by the thrust control system until the frequency of 350 Hz is reached. The current is regulated to maintain constant air gap flux density in the LIM. The current levels in the dc motor and the alternator are regulated by the thrust control system.

3.3.4.2 Cruise - Under the cruise condition, the rectifier applies 1000V to the dc motor armature to maintain the velocity of 150 rpm, which corresponds to 6600 rpm and 330 Hz for the alternator. At full thrust load on the vehicle of 5000 lbs, the vehicle will be travelling at 300 mph. The dc motor armature current will be 4900A and the motor will deliver 6050 hp to the alternator.

The alternator will be delivering 3.82 MW and 6.6 MVA to the LIM with the voltage regulated to 7.15 kV. For lesser cruise velocities, the frequency and voltage will be proportionally lower. The LIM current will be about 530A. The slip of the LIM will be 0.09 pu, about 30 Hz, for a vehicle speed of 300 mph.

3.3.4.3 Deceleration and Braking - The operation of the system for regenerative braking is shown in Figures 3.7 and 3.8. To make the LIM deliver power back through the motor-alternator set, the alternator must deliver power to the LIM to excite it as an induction generator, while the alternator frequency must be kept below the frequency corresponding to the vehicle velocity, negative slip. To start the process, the firing angle of the rectifier must be retarded to 150°, as shown in Figure 3.7, and the motor field current reversed simultaneously. This operation will force the motor to pump power back through the rectifier and start to slow down.

At the start of the braking period, the drag on the vehicle is 5000 lbs and the negative thrust required for a full braking force becomes 2500 lbs, which is the starting point for the thrust curve in Figure 3.8. At lower speeds, the drag quickly drops off and the braking thrust requirement increases.

When braking is initiated and as the alternator slows down, the slip will become negative, the LIM will start to return power to the alternator, and the braking will proceed. The field current of the alternator will be regulated for terminal voltage as a function of frequency. The armature current of the dc motor will be regulated for the required braking thrust at up to 150% LIM current. To match the dc motor voltage to the rectifier, as the vehicle slows down, the firing angle will be continuously advanced toward 90°, zero voltage.

When the vehicle reaches about 10% velocity, the mechanical brakes can be used and the drive system returned to the off condition.

3.3.4.4 Drive System Power Profiles - The LIM input power and the requirement to drive system kVA and reactive power during the three modes of operation is shown in Figure 3.9. Highlights of these plots are a high and constant input kVA level during the entire acceleration period with a low PF of approximately 0.7 and a drive efficiency of about 80% during cruise. During the braking mode the power is being regenerated starting at about 3000 kVA with a relatively low reactive content. Towards the middle of the braking period, the power factor drops to about 0.7 at about 5000 kVA.

3.3.5 Special Dc Motor System

The basic cause of the large bulk and weight of the drive system is the dual limitation of the dc motor commutator on speed and voltage. The consequence is the slow-speed motor, the transformer and the multi-stage gear box.

Toshiba[1] and Brown Boveri[2] have reported the construction of relatively large "dc brushless motors", which are essentially synchronous motors, driven from thyristor cycloconverters. The motors have wound field structures excited with direct current. The stator windings are supplied from either a three-phase ac system or a dc bus through sets of thyristors, whose switching is controlled

by a shaft-mounted optical or magnetic transducer. For an ac supply system, the thyristor circuit consists essentially of a positive rectifier group and a negative group for each phase; the groups are operated so as to generate a sine wave of current through each phase winding at the frequency corresponding to the desired operating speed. For a dc supply system, the thyristor circuit acts as a line commutated inverter.

A special drive motor for the LIM alternator can be developed and built which would operate from thyristors directly from the power rail voltage level and rotate at a considerably higher speed than the standard 150 rpm dc motor. For two-pole construction, the maximum speed could be up to 1200 rpm; for four-pole construction the maximum speed could be 600 rpm. The consequence would be a weight reduction of the motor to that of a synchronous machine, elimination of the transformer, and reduction of the gear box to one or two stages. The rectifier, which formerly supplied the dc motor would be redesigned, to four bridges per phase, or 12 bridges total.

The impact on the weight of the system is shown in Table 3.6. These drive motor and thyristor circuits are not "off-the-shelf" items, and would require development work. The weights for the alternator and gear box in Table 3.6 also include the results of intensive effort to reduce weight by liquid cooling, premium materials, and special mechanical design, on the alternator, motor, and thyristor converter.

3.3.6 Summary

A dc motor-alternator drive system for one 4000 hp LIM has been analyzed from the standpoint of electrical characteristics, operation and weight. One system employs "conventional" design; the other employs "advanced" design concepts. The key results are summarized in the following sections.

3.3.6.1 Weight - The conventional system weighs 78,950 lbs, or 17.3 lbs/kW. The advanced system weighs 24,145 lbs, or 5.61 lb/kW. Both systems are probably too heavy for a vehicle in the 40,000 to 60,000 lb class as compared to systems using primary voltage control or solid-state inversion without voltage transformation.

3.3.6.2 Design - The conventional system is relatively straightforward to design and build. The dc motor at 6,000 hp is special, but has been built before. The alternator at 6.6 MVA and 6600 rpm is also special, but represents state-of-the-art design. The advanced system requires the design and construction of a large brushless motor and converter, which has been done for slower speeds; it should be a limited problem. The water-cooled alternator is also advanced state-of-the-art. The development problems lie basically in the mechanical and heat-transfer aspects, rather than the solid-state circuit aspects. Solid-state rectifier and converter equipment has been built to these ratings for mill drives and electrochemical installations.

3.3.6.3 Operation - The conventional system represents an essentially foolproof system. The transformer and motor-alternator set buffers the vehicle and the LIM from transient and other effects of the power rail system. The system can handle acceleration and regenerative braking with ease. The inertia of the motor-alternator set acts as an energy reservoir for all operating conditions. The control system can be relatively straightforward.

3.3.6.4 Solid State Devices - The solid-state circuits, either the rectifier of the conventional system, or the converter of the advanced system, operate from the power rail source. The circuits operate with 60 Hz line commutation. There is no requirement for special and fast devices to operate at the LIM frequency. The LIM power and reactive power at 330 Hz is supplied from an alternator.

3.3.6.5 Reactive Power - The reactive power burden of the LIM is supplied from the alternator. The reactive power and harmonics at the vehicle input at the collector are attenuated by using phase-shifted secondary windings for the transformer of the conventional system and sequential control of the thyristor bridges in all cases.

3.3.6.6 Potential - The electromagnetic components of the system, i.e., the transformer, dc motor and alternator, have large thermal inertia. For actual operating profiles, the size and weight of these components can probably be reduced below the values shown for continuous operation, and may bring the system into a practical range.

3.4 NATURAL COMMUTATED INVERTER POWER CONDITIONER

3.4.1 Introduction

A natural commutated inverter circuit is considered here as an adjustable frequency power source for the LIM. This inverter can operate from a voltage source directly into the LIM without the benefit of an ac capacitor such as a synchronous condenser. The dc power is provided by a three-phase rectifier with no voltage control. "Conventional" and "advanced" designs, each using an additional inverter for regenerative braking, are considered for weight comparison. A basic control system is discussed together with operating profiles.

3.4.2 Description

3.4.2.1 System Block Diagram - A block diagram of the drive system using the natural commutated inverter is shown in Figure 3.10. The operating frequency and power level of the inverter is controlled by the proper sequencing and distribution of firing pulses to the inverter thyristors by the command signal labeled "Frequency and Level Controls". The natural commutated inverter is oper-

ated on a constant dc voltage provided by a 3-phase rectifier. Thus, the total voltage range desired is obtained without a variable dc supply.

During acceleration and cruise, power flows from the three phase power collectors through the rectifier and dc filter to the inverter. During deceleration, the power flow must reverse. However, the rectifier cannot perform the function as a line commutated inverter due to the polarity of the dc voltage. (The polarity must reverse for this operation of the rectifier circuit.) A second circuit similar to the rectifier, but with reversed thyristors and operating as an inverter, is used in the system shown in Figure 3.10 to accommodate the reversed power flow during the braking mode. (A polarity reversing switch may be used in lieu of this second circuit. This approach however, has a damaging impact on the system reliability and is not considered here.)

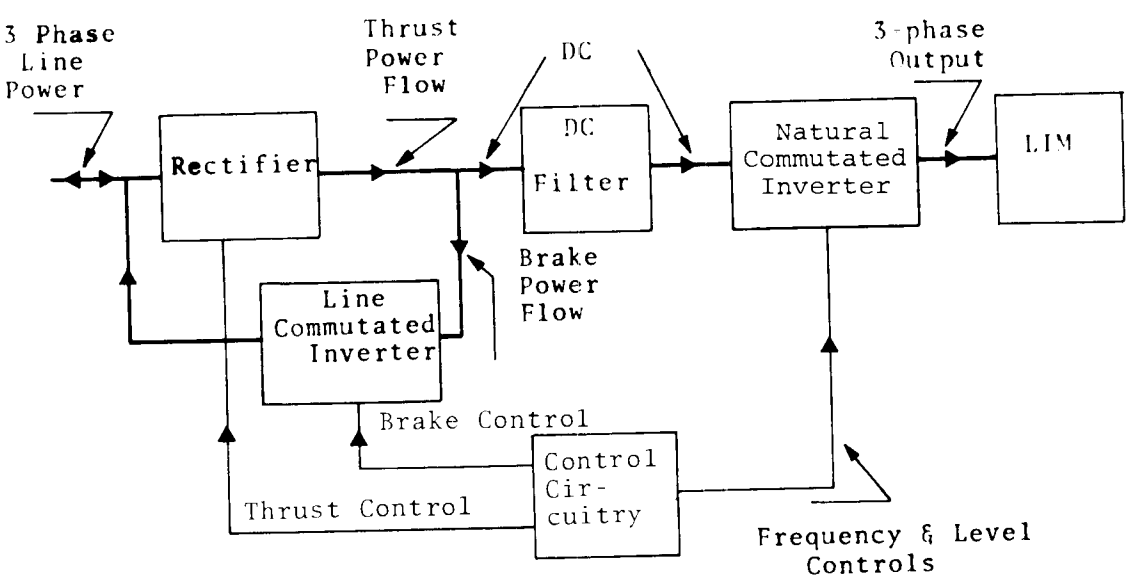

Figure 3.10 Block Diagram of Naturally Commutated Inverter Drive System for the LIM

During the vehicle acceleration, the inverter is controlled to the lowest desirable frequency (the frequency which yields maximum allowable LIM thrust at a slip of unity) and a corresponding low voltage level. As the LIM picks up speed, both frequency and voltage levels are increased. The frequency is increased in such a way that the slip frequency is held constant and the voltage level is held approximately proportional to the frequency. The thrust, as a result, is constant throughout the accelerating period. During cruise, both variables are held constant providing satisfactory speed regulation by virtue of the steep thrust-to-slip curve of the LIM.

During the braking mode, the frequency of the natural commutated inverter must be reduced to provide negative slip. Dc power then flows back through the filter and the line commutated inverter must be controlled through adjustment of its firing angle to regenerate the right amount of power, and in this way control the level of the dc voltage. Details of the profiles during each of the three modes of operation are discussed in Section 3.4.5.

3.4.2.2 Rectifier-Inverter Dc Supply Circuits - A simplified schematic diagram of the rectifier-inverter circuits for the dc supply is shown in Figure 3.11. A single thyristor device is shown in each leg of both circuits. Because of the very large power handling requirement, the thyristor must, in actual design, be series-connected for high voltage operation, and parallel connected for high currents. The methods normally used and the impact of parallel/series thyristors on the design characteristics are discussed in Section 3.4.3. However, the simplified circuits of Figure 3.11 is used here for the purpose of arriving at the basic design parameters.

The rectifier and line commutated inverter circuits shown in Figure 3.11 are similar and their operation is extensively treated in the literature[3,4].

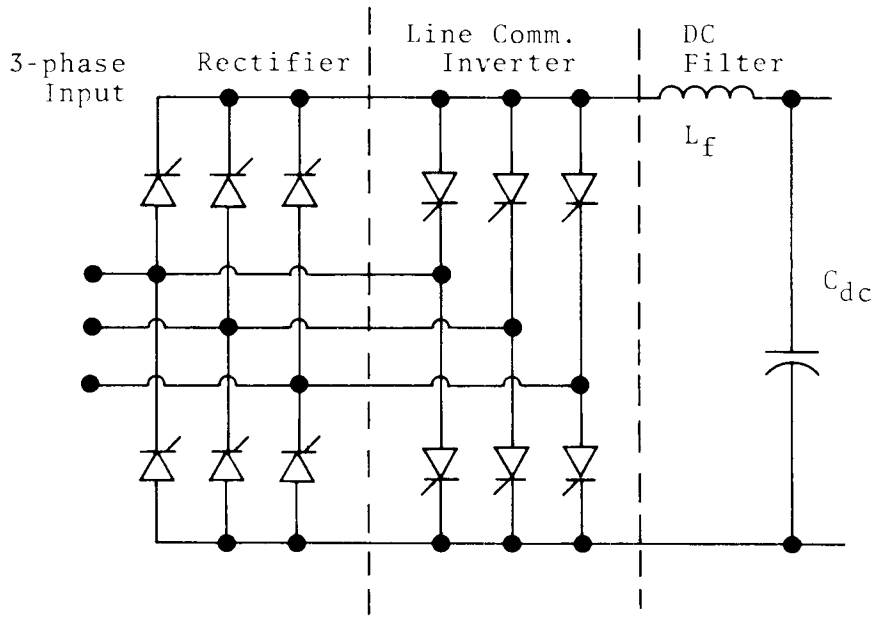

Figure 3.11 Rectifier-Inverter Dc Supply Circuits

During acceleration and cruise the thyristors of the rectifier are fired for a full 120° and operate as diodes. The thyristors of the line commutated inverter are not fired during these modes of operation. During the braking mode, the rectifier thyristors are left inactive and the thyristors of the line commutated inverter are controlled to maintain the dc voltage at a constant normal level.

The purpose of the capacitor C_{dc} is to provide a relatively low impedance voltage source to the inverter and the inductor L_f provides separation between the capacitor voltage and the rectifier-inverter circuits.

3.4.2.2.1 Surge Voltage Protection - Protection against surge voltages is a particularly difficult problem with thyristor circuits, since very narrow spikes of overvoltage can fire a thyristor and result in failure. The so-called RC snubber circuits that are used in parallel with each device give some protection, (the

primary purpose of these is to reduce dv/dt), but high power surges must be reduced by other means.

The overriding problem in an application where the power is taken directly off the high voltage lines (no separation transformer) is adequate protection against surges caused by lightning. Protection must include lightning arrestors and capacitor-diode circuits which discharge overvoltage surges. In addition to this protection, the thyristor circuitry must be designed to withstand a substantial overvoltage. This overrating becomes the circuit safety margin which, for these applications, must be a factor of 2 to 3. (It should be noted that it is not adequate to simply determine voltage surge rating from manufacturers peak voltage and dv/dt ratings, but from actual tests.)

3.4.2.3 Natural Commutated Inverter - A simplified schematic diagram of the natural commutated inverter circuit considered here is shown in Figure 3.12. An output voltage V_o is obtained in this circuit by discharging a commutating capacitor C_{c+} through an inductor L and a pair of thyristors in a bridge circuit into an

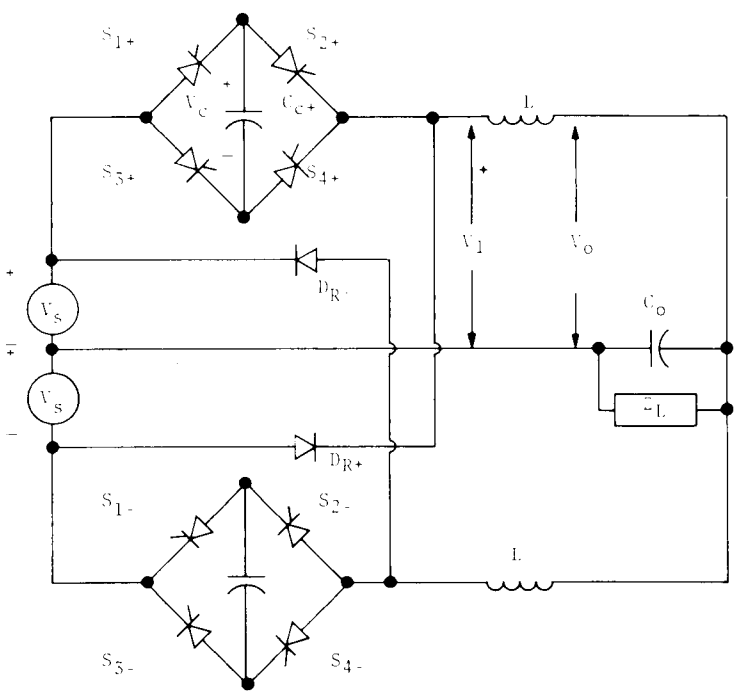

Figure 3.12 Natural Commutated inverter, Simplified Schematic

output capacitor C_o. Reversal of the output voltage is obtained by similar discharging of a second commutating capacitor C_{c-} through thyristors of reversed polarity, driven by a negative power supply. A pair of diodes, D_{R-} and D_{R+}, provide for the flow of regenerative current.

An illustration of the current flow during a charge pulse is given in Figure 3.13. At the beginning of the cycle, the capacitor C_{c+} is charged to 2 V_s with the polarity shown. As the thyristors S_{1+} and S_{4+} are fired, a sinusoidally increasing current starts to flow as indicated by the solid arrow. When the voltage V_1 reaches a value $-V_s$, as C_c charges to 2 V_s of a polarity opposite to that shown in Figure 3.13, the diode D_{R+} starts to conduct and cause the current through L and C_o to be diverted through the negative power supply as indicated by the dotted arrows. This current, which is forced by the inductive energy in L represents power regenerated

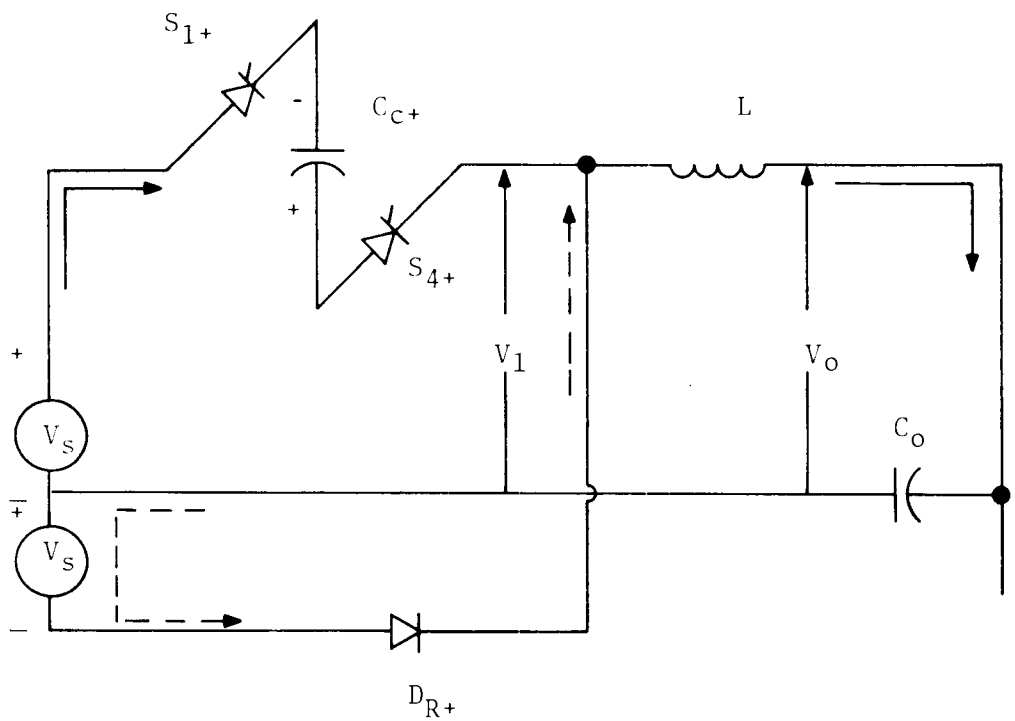

Figure 3.13 Illustration of Current Flow During a Charge Pulse Cycle

in the negative power supply. After the current through L has decayed to zero and S_{1+} and S_{4+} has recovered, the inverter is again ready to provide a charge pulse, this time by firing S_{2+} and S_{3+}, which have become forward biased.

Figure 3.13 shows the voltage and current waveforms during the inverter operation described above. The top waveform is the commutating capacitor voltage which changes polarity after each current pulse by resonant discharge through L. The current pulse, i_L, exhibits a sinusoidal rise to the point where C_c is fully charged, after which the current decays almost linearly during a period which depends largely on the output voltage V_o. The value of C_o is generally much larger than that of C_c. The value of V_o, therefore, increases a relatively small amount during each current pulse. (The V_o waveform is not shown to scale with the other voltage waveforms in Figure 3.14.) The voltage across one of the thyristors in the active bridge and the bridge output voltage are shown by the two lower waveforms.

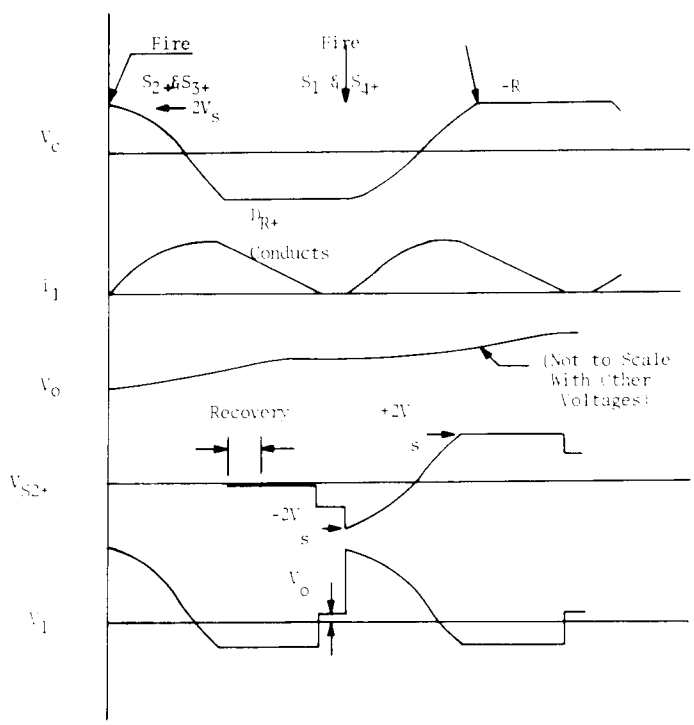

Figure 3.14 Natural Commutated Voltage Waveforms and Charge Current Pulse

Figure 3.15 illustrates the manner in which a sinusoidal voltage waveform, with the desired LIM operating frequency, can be established across C_o. The basic method used is to distribute the current pulses in time such that the average value of V_o, indicated by the dashed line in Figure 3.15, follows a sinusoidal wave. It is obvious that a large number of pulses must be used to avoid significant ripples in the V_o waveform. Compounding the ripple characteristics is the fact that the charge in each pulse is several times larger for $V_o \simeq -V_s$ than when $V_o = +V_s$. This characteristic which is illustrated in Figure 3.15 is discussed in more detail in the next section. The basic method of inverter control is discussed in Section 3.4.4.

A simplified circuit diagram indicating the arrangement for a three-phase output to the LIM is given in Figure 3.16. A complete inverter circuit for one of the three phases is shown by the bold lines. The other two phases are similar, and are indicated by the narrower lines. The balanced characteristic of the load (LIM) eliminates the need for a center-tapped dc source. In the absence of this center-tap, the output capacitor, C_o, is split in two parts, C_{oA} and C_{oB}, to balance this capacitor against the dc source.

3.4.3 System Design

Requirements and specifications are worked out in the following sections for a drive system making use of a LIM developing a rated thrust of 5000 lbs over a zero to 300 mph speed range. Specific efforts are made to minimize the size and weights of the major components of the system employing special cooling and designs, where considered necessary and feasible.

3.4.3.1 Natural Commutated Inverter - - An equivalent circuit for the natural commuted inverter is shown in Figure 3.17 where the switch represents a pair of thyristors, S_{1+} and S_{4+}, in the bridge around the commutating capacitor C_c. The initial condition for the voltages before the closing of the switch is always such that the diode D, which represents diode D_{R+} in Figure 3.12,

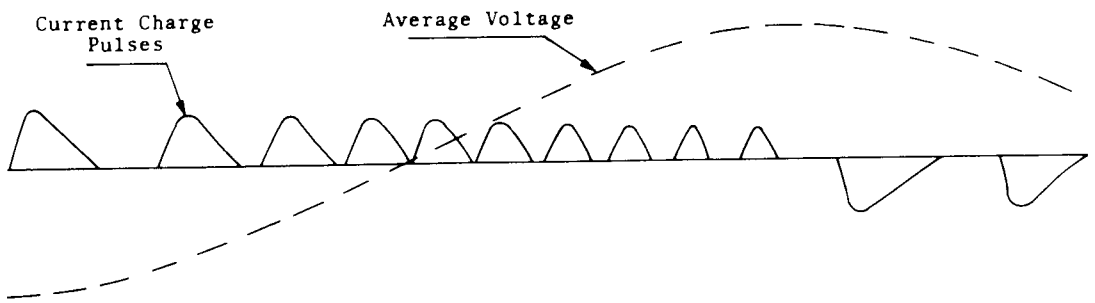

Figure 3.15 Illustration of Inverter Charge Pulses and Resulting Average Ac Output Voltage (No Load)

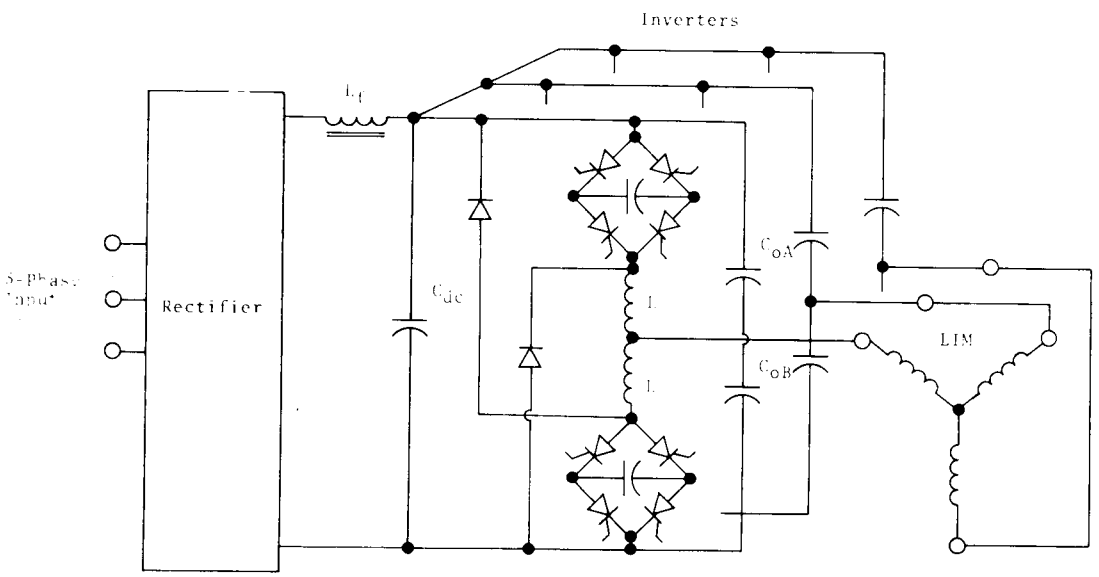

Figure 3.16 Simplified Circuit Diagram of Rectifier-Inverter Drive for the LIM Indicating Coupling of all Three Phases

is in a blocking state. The sum of the initial voltages driving the current i_1 is $3\ V_s - V_o$. After the switch is closed, the capacitor C_c charges to the opposite polarity and reaches a voltage $-2V_s$ after a time t_o when $V_1 = -V_s$ and

$$(3V_s - V_o)\ (1 - \cos \omega t_o) = 4\ V_s \tag{3.8}$$

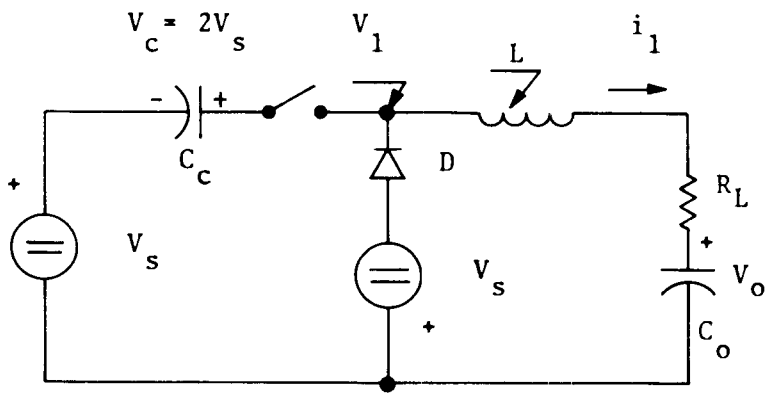

Figure 3.17 Inverter Equivalent Circuit

where $\omega \cong 1/\sqrt{LC_c}$ (assuming that $C_o >> C_c$). The voltage $4V_s$ represents the total change during the time t_o and neglects the small change in V_o (again because $C_o >> C_c$). Equation 3.8 yields

$$\cos \omega t_o = -\frac{V_s + V_o}{3V_s - V_o} \tag{3.9}$$

The peak value of i_1 is

$$i_1 = (3V_s - V_o)\ \frac{1}{\omega L} \tag{3.10}$$

giving the following expression for the current

$$i_1 = (3V_s - V_o)\sqrt{\frac{C_c}{L}} \sin \omega t \tag{3.11}$$

which with Equation 3.9 yields the following expression for the current at t_o

$$i_{1o} = \sqrt{8}\, V_s \sqrt{\frac{C_c}{L}} \left(1 - \frac{V_o}{V_s}\right)^{1/2} . \tag{3.12}$$

The total charge flowing into C_o during the time t_o is the same charge that caused a total voltage change of $4V_s$ across C_c or

$$CH_1 = 4V_s C_c \tag{3.13}$$

At the time t_o, the diode D in Figure 3.16 starts to conduct with the initial current given by Equation 3.12. Considering for the moment that the diode is shorted, the current i_1 reverses and reaches a final value

$$(i_1)_f = -(V_o + V_s) \frac{1}{R_L} \tag{3.14}$$

where R_L represents the total resistance in the circuit. In terms of the circuit "Q", Equation 3.14 may be written as follows:

$$(i_1)_f = -Q \frac{1}{\omega L} (V_o + V_s). \tag{3.15}$$

The current i_{1o} decays to zero in a time t_1 in an L-R circuit with a time constant $\tau = Q/\omega$. Assuming that $t_1 << \tau$, we have

$$\frac{t_1}{i_{1o}} \cong \frac{\tau}{i_{1o} - (i_1)_f} . \tag{3.16}$$

Substitution of Equations 3.12 and 3.15 into Equation 3.16 yields

$$t_1 = \frac{\left(8LC_c\left(1-\frac{V_o}{V_s}\right)\right)^{1/2}}{1+\frac{V_o}{V_s}+\frac{\sqrt{8}}{Q}\left(1-\frac{V_o}{V_s}\right)^{1/2}} \qquad (3.17)$$

An illustration of the circuit voltages and currents for three values of V_o is given in Figure 3.18. The time period t_o and t_1 are indicated for $V_o = 0$. The total time for the current pulse is the sum of t_o and t_1 and can be expressed as follows:

$$\Delta T = \sqrt{LC_c}\left(\cos^{-1}\left(\frac{a+1}{a-3}\right) + \frac{\sqrt{8}\,(1-a)^{1/2}}{1+a+\frac{\sqrt{8}}{Q}(1-a)^{1/2}}\right) \qquad (3.18)$$

where $a = V_o/V_s$.

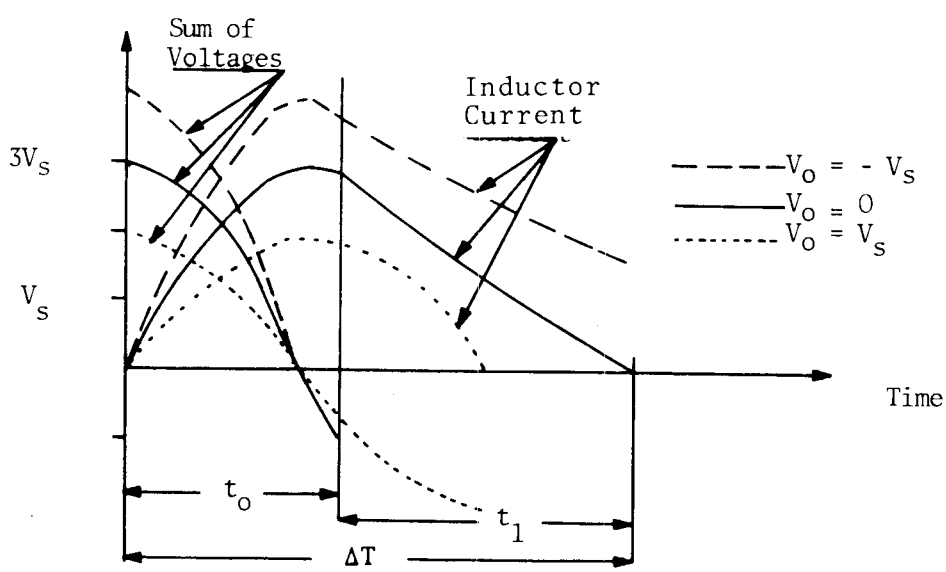

Figure 3.18 Current and Voltages in the Inverter Equivalent Circuit Indicating Time Segments for the Case of $V_o = 0$

A plot of $\Delta T/\sqrt{LC_c}$ is given in Figure 3.19 for $Q \simeq 28$, a value of Q considered reasonable for this type of circuit.

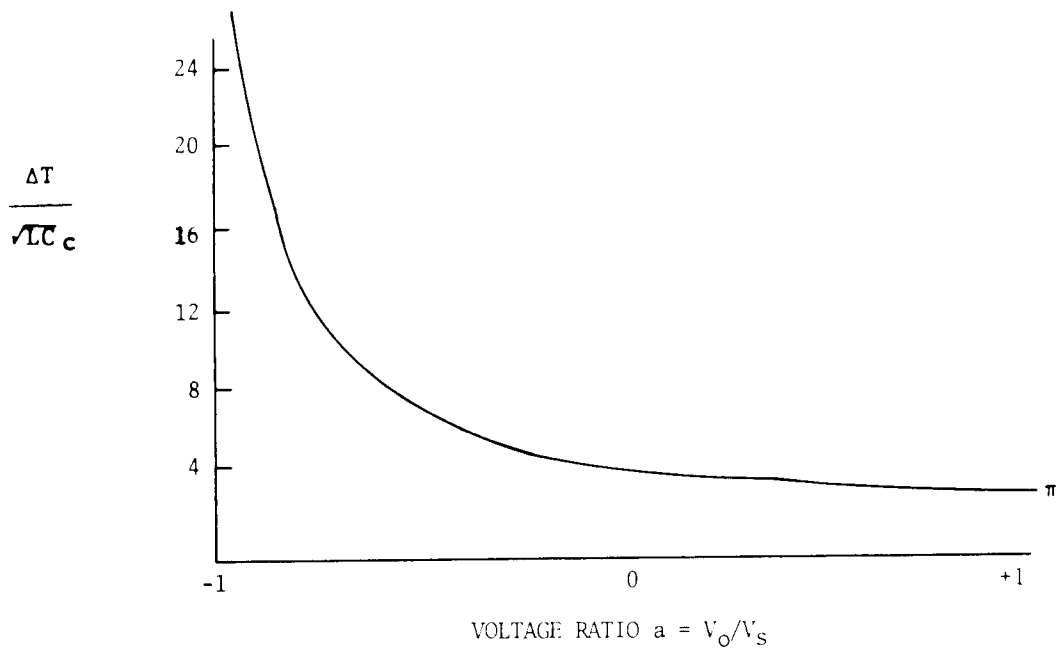

Figure 3.19 Variation of the Inverter Pulse Time with the Output Voltage (Normalized)

The charge flowing into C_o in the time t_1 can be expressed as

$$CH_2 = \int_o^t i_1 \, dt \simeq \frac{1}{2} i_{1o} t_1 \tag{3.19}$$

where a linear decay is assumed. Substitution of Equations 3.12 and 3.17 into Equation 3.19 yields

$$CH_2 = 4C_c V_s (1-a) \frac{1}{1 + a + \frac{\sqrt{8}}{Q} (1-a)^{1/2}} \tag{3.20}$$

The total charge, by summation of Equations 3.13 and 3.20, can now be expressed as follows

$$CH = 4C_c V_s k_1 \tag{3.21}$$

where

$$k_1 = \frac{2 + \frac{\sqrt{8}}{Q}(1-a)^{1/2}}{1 + a + \frac{\sqrt{8}}{Q}(1-a)^{1/2}} . \tag{3.22}$$

Assuming that there can be no charge pulse overlap, the maximum average current flow to the output capacitor C_o and the load impedance Z_L is

$$I_{o\ MAX} = \frac{CH}{\Delta T} = 4C_c V_s \frac{k_1}{\Delta T} . \tag{3.23}$$

The function $k_1/\Delta T$ is shown plotted in Figure 3.20 for values of V_o/V_s between +1 and -1. The plot indicates that the ability of the inverter to deliver a load current (to be split between C_o and Z_L) is relatively constant over the range of V_o/V_s.

For a given current I_o, the power transferred to an inductive load such as the LIM is

$$P_{LIM} = (I_o)^2_{rms} \frac{R_{LIM}}{\left(1 - L_{LIM}C_o\omega_o^2\right)^2 + \left(R_{LIM}C_o\omega_o\right)^2} . \tag{3.24}$$

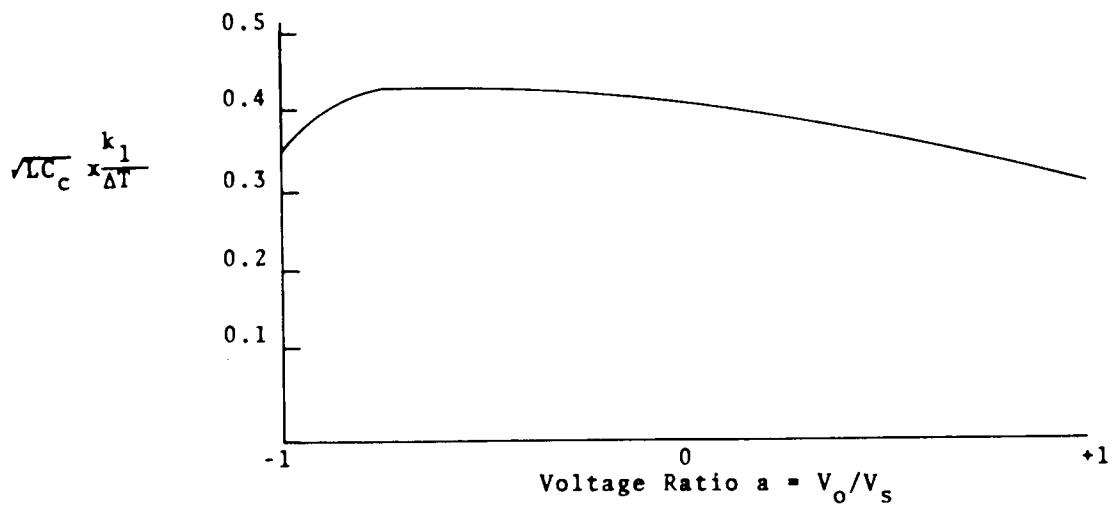

Figure 3.20 Variation of the Maximum Average Inverter Output Current with the Output Voltage Assuming No Pulse Overlap

It can be shown that the value of C_o which maximizes Equation 3.24 is given by

$$C_o = L_{LIM} \left(Y_{IN} \right)^2 . \tag{3.25}$$

The required values of C_o given by Equation 3.25 were calculated for 3 operating frequencies at maximum power condition (I_{LIM} = 780A-rms) and are shown here in Table 3.7. It is quite evident that a compromise value must be found for C_o unless switched capacitors are to be used. Selecting a value for C_o near the optimum, for operation at 330 Hz, is logical since operation mostly takes place at the higher frequencies. A value of C_o= 74 μf is used. Substituting this value into Equation 3.24 yields the following current requirements

$$\left(I_{o\ MAX}\right)_{53\ Hz} = \sqrt{2}\ 780\left[(1 - 0.6883 \times 0.0246)^2 + (0.705 \times 0.0246)^2\right]^{1/2}$$
$$= 1010 \text{ A-peak},\ C_o = 74\ \mu F$$

and

$$\left(I_{o\ MAX}\right)_{330\ Hz} = \sqrt{2}\ 780\left[(1-4.304 \times 0.154)^2 + (3.081 \times 0.154)^2\right]^{1/2}$$
$$= 707 \text{ A-peak},\ C_o = 74\ \mu F$$

TABLE 3.7 LIM INPUT PARAMETERS AND THEORETICAL OPTIMUM VALUES OF C_o FOR MAXIMUM POWER TRANSFER

f (Hz)	R_{LIM}	ωL_{LIM}	Y_{IN}	$(C_o)_{opt}$
53	0.705	0.6883	1.015	2,129 μF
195	1.894	2.495	0.3192	207.5 μF
330	3.081	4.304	0.1889	74 μF

The operating voltage, V_s, for the inverter may be as low as the peak value of V_o. However, leaving a 5% margin we get

$$V_s = \frac{1}{0.95}\sqrt{2}\,\frac{7150}{\sqrt{3}} = 6145V.$$

The value of the commutating capacitor C_c depends among other variables on the number of charge pulses, n_p, per cycle of the output voltage. From Figure 3.19 we see that the total charge pulse duration at $V_o = 0$ is about

$$(\Delta T)_{V=0} \cong 1.36\,\pi\sqrt{LC}. \tag{3.26}$$

Taking this as an average pulse duration, we may write

$$\frac{1}{f} = n_p\ \Delta T = n_p\ 1.36\pi\ \sqrt{LC_c}\ . \tag{3.27}$$

Combining Equation 3.27 with Equation 3.23 and solving for C_c, we get

$$C_c = \frac{1}{5.44\pi} \frac{(I_o)_{MAX}}{f_o n_p V_s} \left(\sqrt{LC_c} \frac{k_1}{\Delta T} \right)^{-1} . \tag{3.28}$$

From Figure 3.20 it can be seen that a value

$$\sqrt{LC_c} \frac{k_1}{\Delta T} = \frac{1}{\pi} \tag{3.29}$$

gives safe operation over the entire range of output voltage. Because of the general di/dt limitation of thyristors, the current handling capacity of the high speed devices falls off at higher frequencies for some high speed devices at 3 kHz (180° conduction). Operation at 3 kHz gives less than 10 pulses per half cycle at 330 Hz and gives severe output distortion. As a compromise, we use here $n_p = 15$ giving

$$C_c = \frac{1}{5.44} \times 1010 \times \frac{1}{6145} \times \frac{1}{330 \times 15} = 6.04 \ \mu F$$

and

$$L = \frac{1}{(15 \times 1.36\pi \times 330)^2 \times 6.04 \times 10^{-6}} = 370 \ \mu H$$

The peak current in the commutating capacitor and thyristor becomes

$$(I_c)_{peak} = 4 \times 6145 \times \sqrt{\frac{6.04}{370}} = 3120A .$$

Since the inverter provides the output three-phase power by relatively high frequency switching, there is relatively little low frequency ripple current being drawn from the power supply.

However, the filter capacitors (C_{DC}) must supply the high frequency charge pulses. As a consequence of the split output capacitor (C_{oA} and C_{oB} in Figure 3.16), only approximately 1/2 I_c flows in C_{DC}. Assuming a sinusoidal distribution of pulses of an average magnitude equal to that for $V_o = 0$ and a (1/2) sinusoidal waveform, the rms value of the ripple current becomes

$$(I_{c-r})_{rms} = \frac{1}{\sqrt{2}} \times \frac{1}{\sqrt{2}} \times \frac{1}{2} \times \frac{2}{3} \times (I_c)_{peak} \qquad (3.30)$$

where the first two factors account for the sinusoidal waveform and distribution, the 1/2 accounts for the split output capacitor and the 2/3 for the lower average peak magnitude. Assuming finally that the charge pulses in each of the three phases are randomly distributed, the total ripple current becomes

$$I_{c-r} = \frac{1}{2\sqrt{3}} (I_c)_{peak} \cong 925\text{A rms.}$$

The use of electrolytic capacitors for C_{DC} limits the lower practical value by the ability of these capacitors to carry high ripple currents. Assuming here that the capacitor must provide the 1000A ripple current with a 10% ripple voltage, we get

$$C = \frac{925\text{A}}{0.10 \times 12{,}300\text{V}} \times \sqrt{LC_c} = 37.2\ \mu\text{F minimum.}$$

Specifications for the natural commutated inverter are given in Table 3.8.

3.4.3.1.1 <u>Series/Parallel Connection of Thyristors</u> - The large power handling requirement of the thyristor circuitry gives rise to a number of design problems over and above those that have been successfully dealt with in the past. These problems are mainly associated with the requirement for parallel/series connection of large numbers of thyristors and diodes and also the requirement

TABLE 3.8 SPECIFICATIONS FOR THREE-PHASE NATURAL COMMUTATED THYRISTOR INVERTER	
1. Type	Double Bridge, series
2. Dc Operating Voltage	12,300 Vdc
3. Ac Output Current	780A max. 530A cruising
4. Inverter Carrier Frequency	5 kHz
5. Output Frequency Range	53 to 330 Hz
6. Load Power Factor	0.58 min.
7. Max. Power	5.7 MW
8. MVA Capacity	6.6 MVA to 9.65 max.
9. Commutating Capacitors (6) Inductors (6) Thyristor Assemblies (24)	6.0 μF, 12 kV, 3200A-peak 370 μH, 12 kV, 3200A-peak 18.5 kV, 3200A-peak
10. Regenerative Diode Assemblies (6)	25 kV, 3200A-peak
11. Source Capacitor	40 μF, 12,300V minimum 925A rms ripple current
12. Output Capacitors (3)	75 μF, 6150V-peak

for an adjustable range of LIM primary voltage at full current levels. If the thyristor circuits are designed to operate at voltage and current levels such as those given by Table 3.7, the current may be handled typically by 8-to-10 thyristors in parallel. The voltage rating also requires a number of thyristors in series. Straight parallel connection of thyristors is used where a 20% current sharing is adequate. This may not be quite adequate in this application and better matching of the parallel thyristors may be required.

In the series connection of thyristors, it becomes very important to assure uniform voltage division for all static and dynamic conditions. Circuits, comprising capacitors, resistors and a diode have been designed which accomplish this successfully.

The disadvantages of additional power loss (typically 1%) are normally associated with the series connecting circuits and the derating of the individual device operating voltage. The additional components also add significant weight as does the trigger pulse transformer for thyristor firing, since these must be designed for higher isolating voltages.

These problems associated with series and parallel operation are discussed in more detail in Appendix C.

3.4.3.2 Rectifier - The rectifier output voltage may be expressed as follows[4]

$$V_{dc} = \frac{3\sqrt{2}}{\pi} V_{\ell\ell} \cos\alpha - \frac{3x_\ell}{\pi} I_{dc} \tag{3.31}$$

where x_ℓ is the reactance of the feed lines. Equation 3.31 may be rewritten in terms of the per unit line reactance as follows

$$V_{dc} = \frac{3}{\pi} V_{\ell\ell} \left(\sqrt{2} \cos\alpha - X_\ell\right) \tag{3.32}$$

where X_ℓ is the 60 Hz line reactance. Assuming a nominal of 10° for α, nominal system line reactance of $X_\ell = 0.1$ and solving Equation 3.32 for $V_{\ell\ell}$, we get

$$V_{\ell\ell} = \frac{2 \times 6145 \times \pi}{3\,(1.41 \times 0.985 - 0.1)} = 10{,}000\text{V-rms.}$$

Peak low frequency inverter current per phase is found to be

$$\left(I_{oMAX}\right)_{53} = 1010\text{A}$$

which corresponds to a total inverter output power at this frequency of

$$\left(P_{INV}\right)_{53} = 3\ \frac{I_{oMAX\ 53}}{\sqrt{2}} \times V_o \times 0.71$$

$$= 3\ \frac{1010}{\sqrt{2}} \times \frac{1331}{\sqrt{3}} \times 0.71 = 1.17\ \text{MW}.$$

At the high frequency of operation, the power delivered is close to the LIM power at maximum operating condition and thrust or

$$\left(P_{INV}\right)_{330} \cong 5.7\ \text{MW}.$$

The dc current at the low frequency of operation becomes

$$\left(I_{DC}\right)_{53} = \frac{1.17 \times 10^6}{0.9 \times 2 \times 6145 \times 0.18} = 588\text{A}$$

where the inverter efficiency is estimated at 0.9 or 90%. The maximum dc current at the high frequency of operation becomes

$$\left(I_{DC}\right)_{330} = \frac{5.7 \times 10^6}{0.9 \times 2 \times 6145} = \underline{516\text{A}}$$

assuming a maximum power level of

$$\left(P_{DC}\right)_{max} = \frac{5.7}{0.9} = \underline{6.35\ \text{MW}}.$$

The rectifier's specifications are given in Table 3.9.

3.4.3.3 Line Commutated Inverter - The operating voltages for the line commutated inverter are the same as those for the rectifier. The current level and duty cycle are lower, but this is not expected to have any significant impact on the choice of thyristors, method of cooling, etc. Thus, it is assumed here that the specifications for the rectifier and inverter are the same as indicated in Table 3.9.

TABLE 3.9 SPECIFICATIONS FOR THE THREE-PHASE RECTIFIER AND LINE COMMUTATED INVERTER	
1. Maximum Dc Voltage	12,300
2. Maximum Current	600A
3. Power Rail Voltage	10,000V ±5% rms
4. Assumed Feed Line Reactance	0.1 pu
5. Power Rating	4.26 MW cruising, 6.35 MW max.

It is also assumed that the thyristors for both functions can be mounted on the same heat sink and in that way reduce the weight and volume to a minimum.

3.4.3.4 Dc Filter Inductor - The dc filter inductor (L_f in Figure 3.11) must support the rectifier output ripple and the ripple voltage across the line commutated inverter, when this is activated during regenerative braking. The ripple voltage generated by the rectifier is low (about 5%) since its thyristors are controlled to conduct for a full 120° angle. The firing angle of the line commutated inverter, however, must be lower than the full 180° to provide for thyristor commutation and may be expected to vary to accommodate some variation of the 3-phase line voltage.

An accurate calculation of the value of L_f is also dependant on the amount of 360 Hz ripple voltage that the series inverter can operate with. The calculations are limited here to an estimate of the inductor value using the assumptions that the line commutated inverter operates with a minimum firing angle of 150° giving a maximum rms ripple voltage of about 15% of the dc voltage, and that this ripple voltage must be supported with an rms ripple current of 15% of the full load amount. The value of L_f then becomes

$$L_f = \frac{(V_r)_{rms}}{\omega(I_r)_{rms}}$$

$$= \frac{12300}{2\pi \times 360 \times 588} \cong 10\text{mH}.$$

The inductor's specifications are given in Table 3.10.

TABLE 3.10 SPECIFICATIONS FOR DC INDUCTOR (1)	
1. Inductance	10 mH
2. Maximum Current[1,2]	588A
3. Maximum Ripple Voltage	14,140V p-p
4. Dc Resistance	0.1Ω

Notes

1. At 150% thrust and low frequency
2. At 1% loss of peak inverter power

3.4.3.5 Components Weights - The components' weights are estimated for air-cooled and liquid-cooled equipment and listed in Tables 3.11 and 3.12 respectively. The sources of the data and the measuring used to determine the final figures are given in the following sections.

3.4.3.5.1 Natural Commutated Inverter

1. Thyristors - High speed-high power thyristors, such as the National Electronic's NLF 291, is used as the basis for an estimate of the number of devices required. The value of the peak current that this device can handle depends to a large degree on the duty cycle and the pulse length. Data given by the manufacturer indicates a peak current level at 900A per device at 55°C case temperature and the relatively low duty cycle expected at the peak

TABLE 3.11 WEIGHT OF COMPONENTS FOR THE DRIVE SYSTEM USING A NATURALLY COMMUTATED SERIES TYPE INVERTER, CONVENTIONAL DESIGN

Component	Specification	Weight
N.C. Inverter[1,2]	6.6 MVA, 12.3 kVdc 7.15 kVac, 3 ϕ , 330 Hz	7,680 lbs
Dc Inductor[1,2]	10 mH, 623A 8.7 kV p-ripple 0.1 Ω resistance	270 lbs
Dc Filter Capacitor[1,2]	40 μf, 12,300V 925A_{rms}-ripple	3,000 lbs
Rectifier[1,2] and Line Commutated Inverter	4.26 MW, 12.3 kVdc 10 kVac, 60 Hz, 20 kV surge	3,400 lbs
Total[1,2]		14,350 lbs
Spec. weight related to LIM real power		3.8 lb/kW

Notes

1. All components must have a 150% overload, 1 min., rating
2. Forced air cooling

TABLE 3.12 WEIGHT OF COMPONENTS FOR THE DRIVE SYSTEM USING A NATURALLY COMMUTATED SERIES TYPE INVERTER ADVANCED DESIGN

Component	Specification	Weight
N.C. Inverter[1,2]	6.6 MVA, 12.3 kVdc 7.15 kVac,3 ϕ , 330 Hz	4,440 lbs
Dc Inductor[1,2]	10 mH, 623A 8.7 kV p-ripple o.1 Ω resistance	135 lbs
Dc Filter Capacitor[1,2]	40 μf, 12,300V 925A_{rms}-ripple	2,000 lbs

TABLE 3.12 (Continued)		
Component	Specification	Weight
Rectifier[1,2] and Line Commutated Inverter	4.26 MW, 12.3 kVdc 10 kVac, 60 Hz, 20 kV surge	1,700 lbs
Total[1,2]		8,275 lbs
Spec. weight related to LIM real power		2.2 lb/kW

Notes

1. All components must have a 150% overload, 1 min., rating
2. Liquid cooling

current could exceed 1000A. The device is rated at 1800V. With a 50% margin on the operating voltage the number per thyristor switch becomes

2 devices in parallel (1800A peak)

and

10 devices in series (3 x V_s)

The International Rectifier fast recovery diode is used for an estimate of the number of diodes required. The data indicates the maximum operating characteristics of 1800 volts and 450A at low duty giving

4 devices in parallel (3300A peak)

and

15 devices in series (25 Kv).

The grand total for three phases becomes

$$3(4 \times 2 \times 10 + 2 \times 4 \times 15) = 600 \text{ devices.}$$

It is estimated that special packaging techniques could result in about 4 lb per device for air-cooled equipment and 3 lb per device for the water cooled case. Furthermore, it is expected that water cooling can allow 3/4 reduction of the no. of devices. The total thyristor assembly weight therefore

$$w_{TH} = 4 \times 600 = 2400 \text{ lb air-cooled}$$

and

$$w_{TH} = 3 \times 3/4\ 600 = 1350 \text{ lb liquid cooled.}$$

2. Capacitors - The weight of capacitors C_c and C_o are estimated on the basis of use of commutating type capacitors with a specific weight of approximately

$$w_c = 0.25 \text{ lb/joule}$$

thus for $C_c = 6.0\ \mu F$ at 13,000V

$$w = (1/2)\ 6.0 \times 10^{-6} \times 13{,}000^2 \times 0.25 = 127 \text{ lbs each,}$$

for $C_o = 74\ \mu F$ at 6000V

$$w = 1/2 \times 0.74 \times 10^{-4} \times 6000^2 \times 0.25 = 333 \text{ lbs each.}$$

The electrolytic capacitor for C_{dc} can be obtained with voltage rating up to 450 volts only and must be series connected for the 12,300 operation. When 28 "computer-grade" capacitors such as the Sangamno type 500, 500 μF, 450V are used in series, the total capacitance becomes 18 μF. The short-term ripple current capacity

of these units at 5 kHz is approximately 10 amps. Thus, for the 1000 amperes a total of 100 parallel strings are required giving a total of 1800 mF and 2800 units. The total volume of the capacitors becomes

$$V = 2800 \times \frac{\pi}{4} \times 2^2 \times 5.5$$

$$= 48{,}400 \text{ in}^3.$$

The weight of electrolytics is about .9 oz per in^3. Allowing an extra 10% for voltage dividing resistors, mounting brackets, etc., the total weight becomes

$$W_{cdc} = \frac{48{,}400}{16} \cong 3000 \text{ lbs.}$$

Total weight for capacitors is

$$6 \times 127 + 3 \times 333 + 3000 \cong 4{,}800 \text{ lbs.}$$

With the use of special cooling techniques, a total of 3,200 lbs can be assumed.

3. Inductors - The inductor presents a special problem because of the high frequency. The skin depth in aluminum at 5 kHz is

$$\delta = (2.6/\sqrt{f})\sqrt{\frac{\sigma al}{\sigma cv}}$$

$$= \frac{2.6}{\sqrt{5000}} \times \sqrt{\frac{2.62}{1.774}} = 4.5 \times 10^{-2} \text{ in.}$$

For a light-weight compact design, we consider here a liquid-cooled, cylindrical air core inductor made of a single layer of aluminum pipes. To obtain a sufficient cross-sectional area of the conductor, it becomes necessary to use a bundle of pipes, twisted together as in a Litz cable. First, assume a current density of 3A/1000CM or $\sim$ 2500A/in^2. Use of pipes with walls 1/16 in

thick (slightly more than the skin depth) and a 3/16 in diameter gives an effective cross sectional area per pipe of

$$\alpha = \pi\left(\left(\frac{3}{32}\right)^2 - \left(\frac{3}{32} - 0.045\right)^2\right) = 6.4 \times 10^{-3}\ \text{in}^2$$

and a number of pipes *

$$N_p = \frac{\frac{1}{\sqrt{2}}\ 1072\ A}{2500\ A/\text{in}^2 \times 6.4 \times 10^{-3}} = 47.$$

Diameter of the bundle becomes

$$d \cong \frac{1}{0.95}\sqrt{34} \times \frac{3}{16} = 1.35\ \text{in}$$

where the 0.95 allows for insulation between the pipes. For a cylindrical design with an inductor diameter equal to its length, the number of turns can be expressed as

$$N = \sqrt{\frac{L}{0.0173 \times D}}$$

where L is in μh and D the diameter in inches. Set

$$D = 35'' \text{ and } L = 370\ \mu\text{h}$$

giving

$$N = 25 \text{ turns.}$$

The minimum length of the coil allowing 1/4 inch spacing between turns becomes

* The $1/\sqrt{2}$ factor is used since the inductors have a 50% duty.

$$\ell = 25 \times 1.60 = 40''$$

which approximately satisfies the desired D/ℓ ratio.

The weight of the aluminum piping becomes

$$W_{A\ell} = \underbrace{(\pi \times 35 \times 25)}_{\text{length}} \times \underbrace{\left(47\pi\left(\left(\frac{3}{32}\right)^2 - \left(\frac{1}{16}\right)^2\right)\right)}_{\text{Area}} \times 0.0967 \text{ lb/in}^3$$

or

$$W_{A\ell} = 192 \text{ lb.}$$

Assume 50% additional weight to allow for hardware and cooling liquid giving

$$W_L = 290 \text{ lb each.}$$

We assume twice this weight for the air-cooled case.

4. Total Weight

	Air Cooled	Liquid Cooled
Thyristors	2,400 lbs	1,350 lbs
Capacitors	4,800	3,200
Inductors	3,480	1,740
Total	10,680	6,440

3.4.3.5.2 Dc Inductor - For the dc inductor, a similar design to the Garrett light weight, liquid cooled aluminum air core inductor is assumed. For this design, a specific weight is calculated of

$$W = \frac{\text{Weight}}{\text{Stored Energy}}$$

$$= \frac{410}{1/2 \times 2.3 \times 10^{-2} \times 680^2} = 0.07 \text{ lb/Joule.}$$

Thus, for the 10 mH inductor the following is used:

$$\text{Weight} = 0.07 \times 1/2 \times 1.0 \times 10^{-2} \times 620^2 = 135 \text{ lbs.}$$

With air cooling, a weight of twice the 135 lbs, or 270 lbs is assumed.

3.4.3.5.3 Rectifier and Line Commutated Inverter - For estimates of the total weight of these circuits, the Westinghouse Report, (Ref. 3) Vol. 2, Figure 7.12, gives typical weights for three-phase rectifiers projected for 1973. To these figures we add 50% for the line commutated inverter thyristors and another 50% for surge voltage suppression circuitry. Thus, for the conventional design, we use 0.8 lb/kW and for the advanced design, using liquid cooling, 0.4 lb/kW.

3.4.4 Control System Design

A block diagram of a control system for the LIM drive using the natural commutated inverter is shown in Figure 3.21. The control design is based on the following approach:

1. The LIM thrust is made proportional to the motor "slip" frequency* by controlling the motor primary voltage so that it becomes proportional to its frequency.

2. The frequency of the primary voltage is made proportional to a signal obtained by integrating the difference, or "error", between a desired speed signal and a measurement of the LIM speed.

* The slip frequency is the difference between the frequency of the LIM primary voltage and the frequency analogous to the LIM speed of travel.

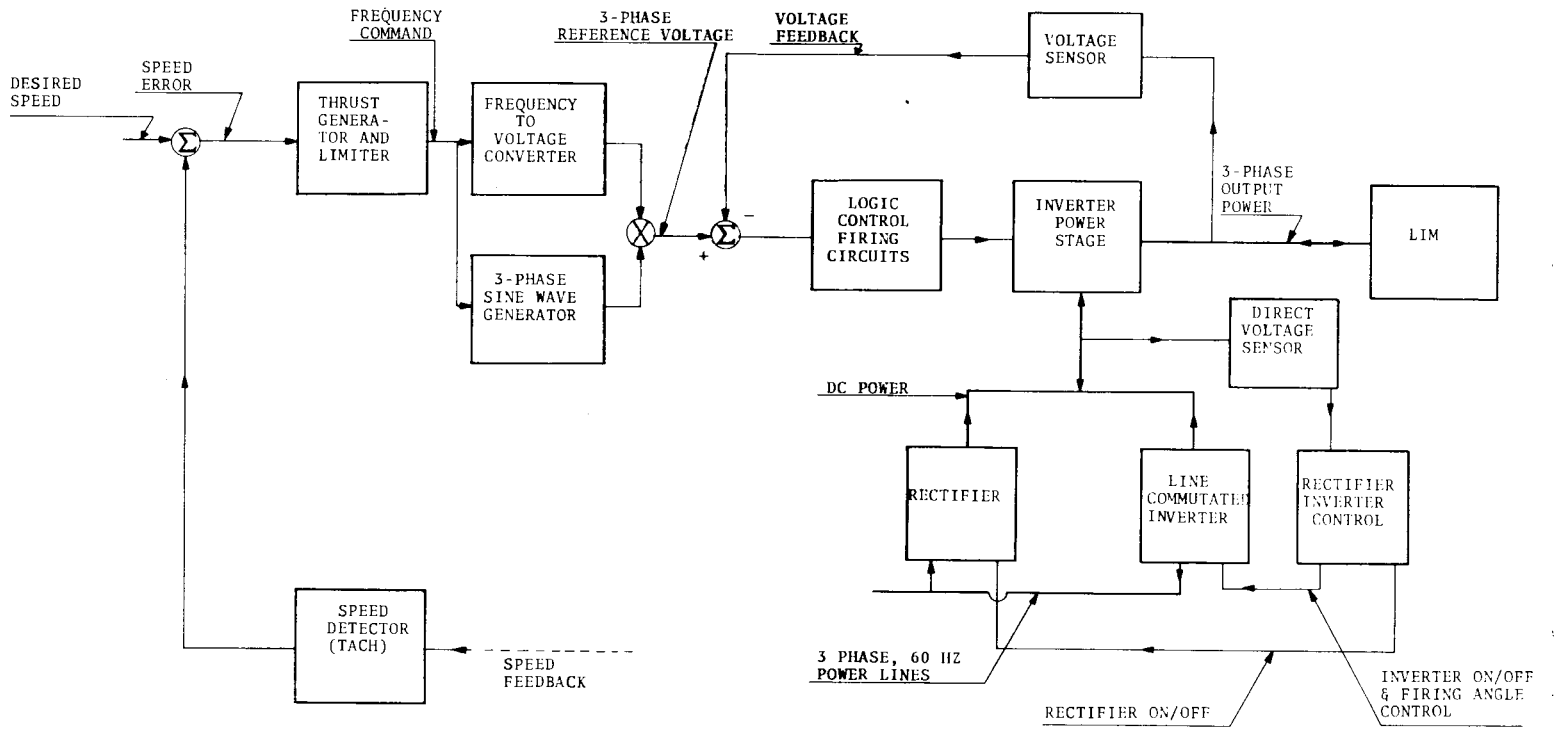

Figure 3.21 Control System for LIM Drive Using the Naturally Commutated Inverter

3. The frequency command signal is subjected to a function which limits the thrust when the above error is large.

4. The inverter output wave form and voltage is controlled by means of a voltage feedback loop.

The block labeled "Thrust Generator and Limiter" in Figure 3.21 performs the functions of (1) and (2) above by producing a LIM operating frequency

$$f = k\int (\Delta f_c - \Delta f_m)\, dt \tag{3.33}$$

where the measured "slip frequency" is

$$\Delta f_m = f - f_m \tag{3.34}$$

and the command slip is

$$\Delta f_c = \begin{cases} f_d - f_m & ; \leq \Delta f_{max} \\ \Delta f_{max} & ; > \Delta f_{max} \end{cases} \tag{3.35}$$

The frequency f_m in the above equations is a signal proportional to the measured vehicle speed and f_d the desired vehicle speed. When $\Delta f_c < \Delta f_{max}$, the frequency command becomes

$$f = k\int (f_d - f)\, dt \tag{3.36}$$

which indicates that the frequency of operation remains fixed when the desired speed f_d is reached. This is the condition during vehicle cruise. (Vehicle speed is held relatively constant by the steep slope of the thrust-speed motor characteristics.)

During acceleration when $f_d >> f_m$, the frequency f becomes

$$f = k\int \left[\Delta f_{max} - (f - \Delta f_m)\right] dt \tag{3.37}$$

which indicates that after a transient (with a time constant 1/k) during which the frequency f rises, the steady state condition is reached when

$$f = \Delta f_{max} + f_m \tag{3.38}$$

which is the constant slip condition giving a near constant, and maximum, acceleration. During the deceleration, when regenerative braking is used, the operation is the same except that a limit $-\Delta f_{max}$ is employed.

The resulting frequency command (f) is converted to a three-phase sinusoidal voltage reference for the inverter control loop. This process is indicated in Figure 3.21 as a conversion of the frequency command to both a 3-phase sine-wave, of the source frequency, and a voltage proportional to the frequency followed by an analog multiplication of the two signals. The resulting three-phase voltage is then compared with a measurement of the actual inverter output and the error used in a logic control circuit to sequence the firing of the thyristors.

The rectifier, operating from the 3-phase 60 Hz power lines, provides the dc power for the inverter during the acceleration and cruise modes of operation. During the braking mode, current flows back into the dc storage capacitor (C_{dc} in Figure 3.11) and the voltage level increases. This increase in the dc voltage level is used in the control system of Figure 3.21 to inhibit the firing pulses to the rectifier and, after a certain deadband is traversed, start firing the line commutated inverter. The inverter firing control must control the firing angle to regenerate the correct amount of power so that the dc voltage level is held below a given ceiling.

3.4.5 System Operation

The operation profiles of the natural commutated drive system are illustrated in Figures 3.22, 3.23, and 3.24. A short

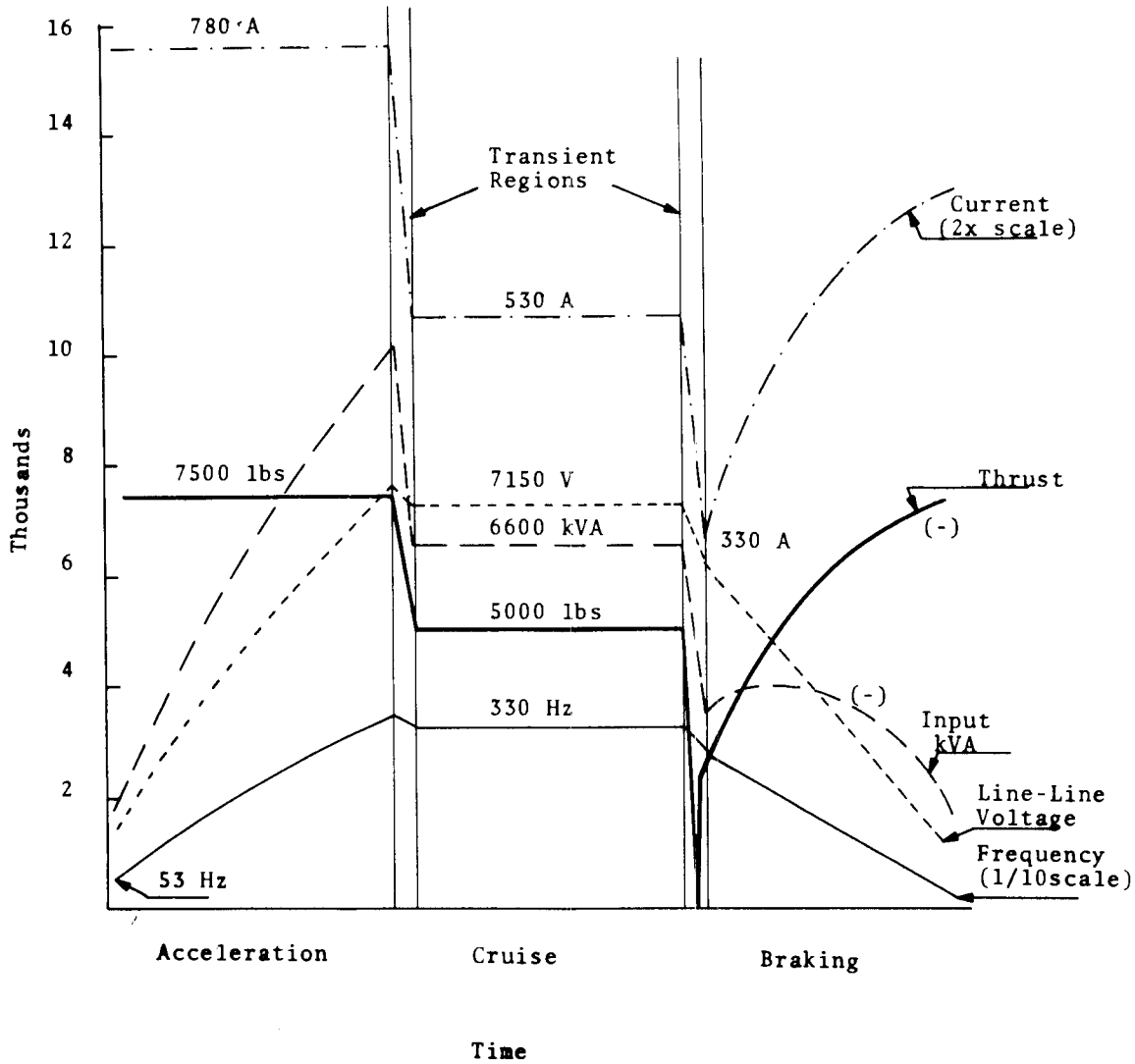

Figure 3.22 Operation Profile of the LIM

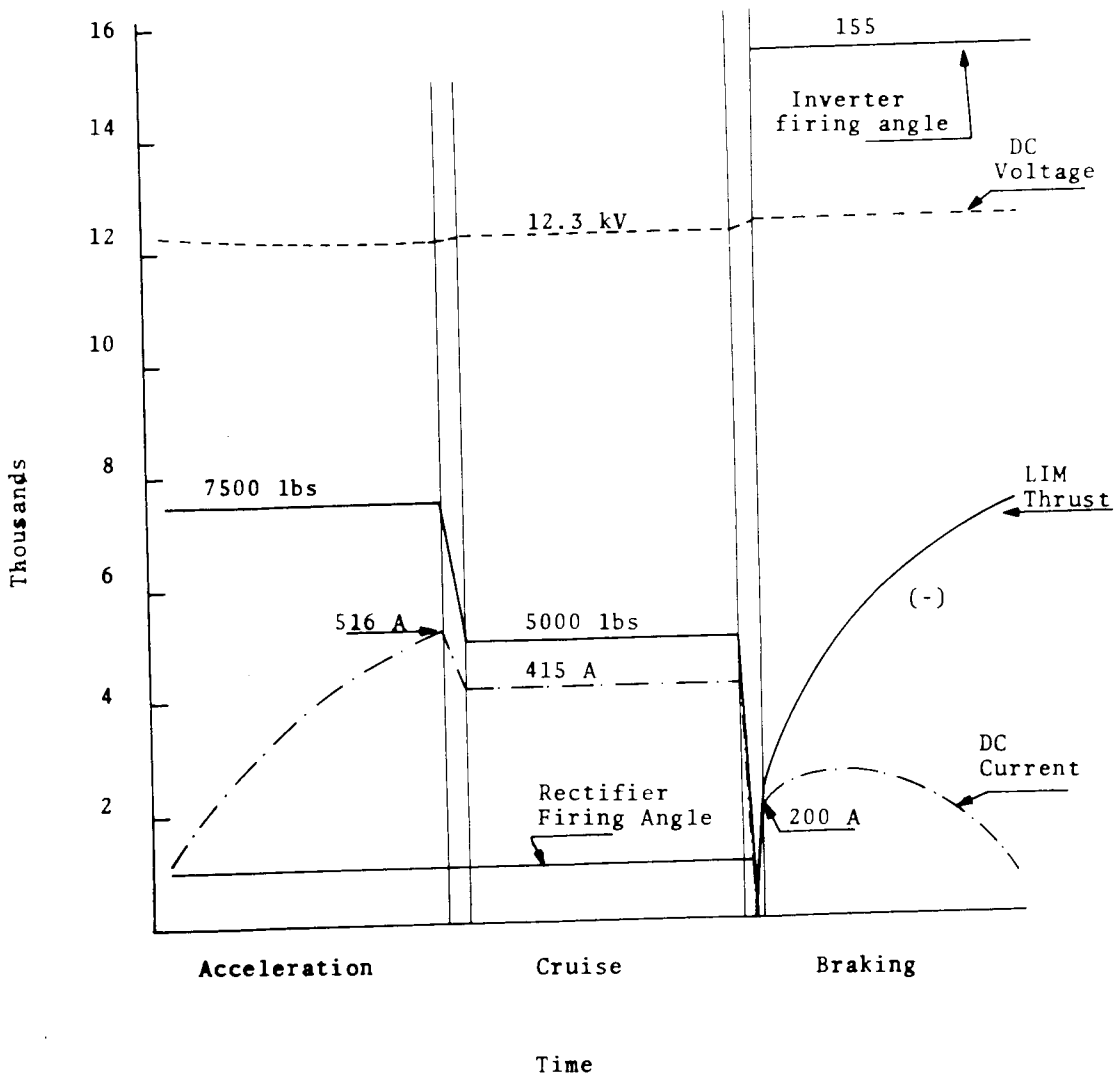

Figure 3.23 Operational Profile of the Natural Commutated Drive Related to LIM Thrust

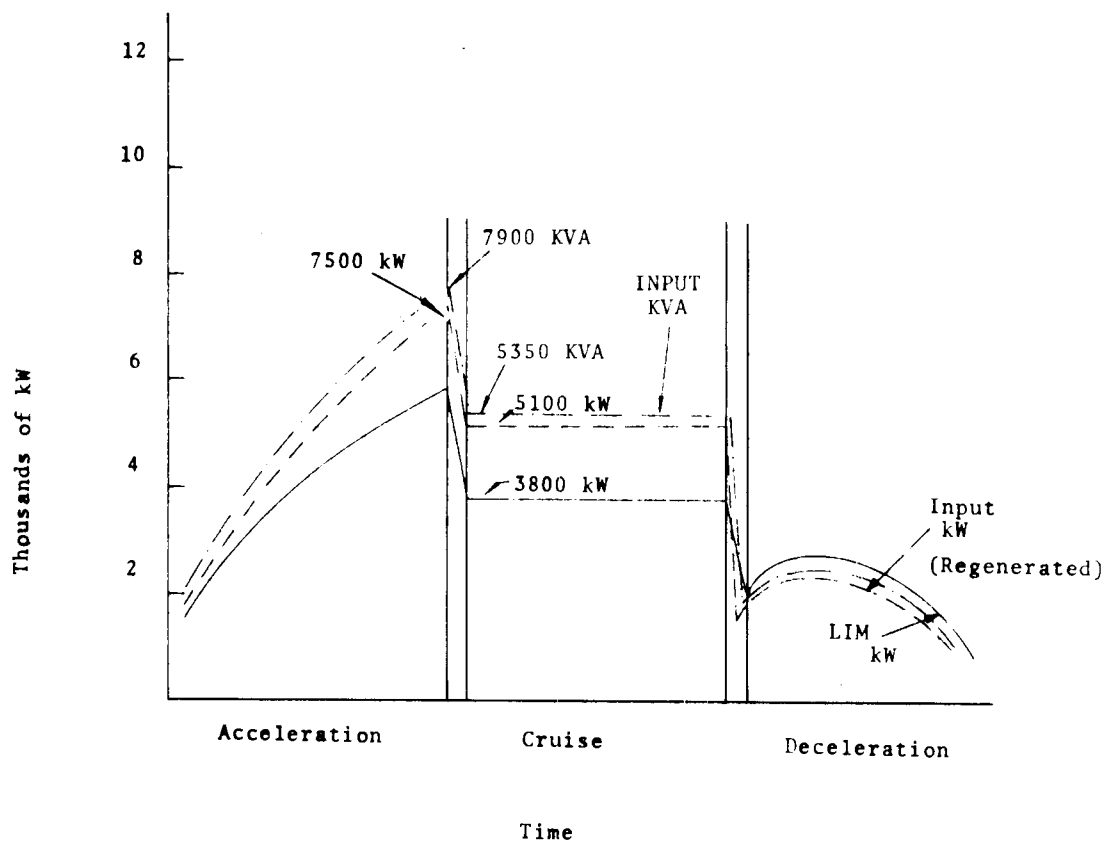

Figure 3.24 Drive System Input Power Profile Compared to LIM Real Power

discussion of these profiles for each of three modes of operation is given in the following. The LIM and system input power profiles are also discussed.

3.4.5.1 Acceleration - Acceleration of the vehicle is started by applying a speed command to the drive system ("desired speed" in Figure 3.21). This speed command, which is proportional to the desired cruise speed, produces a large speed error signal causing the frequency to rise quickly to the maximum slip frequency of 53 Hz as indicated in the LIM profiles of Figure 3.22. The 3-phase sine wave generator and the inverter control loop responds to the frequency command and produce the minimum LIM primary voltage of 1330 V at the 53 Hz. The thrust reaches the maximum level of 7500 lbs and accelerate the vehicle until the difference between the desired frequency and the frequency measurement proportional to LIM speed (the tachometer output) drops to the maximum allowable slip frequency. At this point, the LIM frequency and voltage become constants and a small additional acceleration brings the slip frequency down to where the LIM thrust is sufficient to overcome vehicle drag (5000 lbs) only.

Acceleration of the vehicle is at a maximum at the start, since the vehicle drag is low. This gives the upward curvature of the frequency profile. The initial jerk performance of the vehicle is a function of how fast the frequency is rising from zero. This can be controlled by the gain constant in Equation 3.21 as discussed in the previous section. The operational profiles for the drive system giving LIM thrust, dc operating voltage and current levels, and rectifier and inverter firing angles are shown in Figure 3.23.

3.4.5.2 Cruise - During cruise, the LIM operating frequency is held constant corresponding to the desired speed command signal. Any variation in drag and/or grade results in a corresponding variation in the slip frequency which produces the thrust variation required. A $\pm 25\%$ variation in thrust command can be seen from Figure 3.1 to result in an approximately $\pm 6\%$ speed variation.

3.4.5.3 Braking - The braking mode is started by a reduction (to zero if a complete stop is desired) of the desired speed. The resulting negative speed error produces a rapid drop in the operating frequency command signal from the thrust generator. At the lower frequency, a negative motor slip produces a negative thrust and a LIM voltage higher than that produced by the inverter. Current in the inverter now reverses and power starts to flow in the reversed direction.

The dc voltage level at the inverter input begins to rise at this point. The rise in the voltage is detected by the dc voltage sensor and the rectifier/inverter control shuts the rectifier off and turns the line-commutated inverter on. (It is important that the latter is turned on with firing angles that yield the correct dc-to-ac voltage ratio.)

The curves shown for the braking mode in Figure 3.22 attempt to take the effect of the diminishing drag into account. Thus, the braking thrust required at the start of the braking period is 7500 lbs less the 5000 lbs of drag at this point and increases as the speed drops (for constant acceleration).

3.4.5.4 Drive System Power Profiles - The LIM input power and the requirement to drive system power during the three modes of operation are shown in Figure 3.24. Since the inverter operates with a constant dc input voltage during the acceleration and cruise periods, the rectifier firing angle is low and the input power factor is near unity. The most important consequence of this is a high drive system efficiency (of approximately 75%) during the accelerating period and no requirement for high reactive power levels. During the braking period, the firing angle of the line commutated inverter must be adjusted to provide the correct input-output ratio for power regeneration. This must occur with a lower power factor and more reactive power. However, the efficiency should still be relatively high.

3.4.6 Summary

An adjustable frequency drive system for a 5000 lbs thrust, 300 mph LIM utilizing a natural commutated inverter has been analyzed for the purpose of obtaining the electrical characteristics of the system parts, operating characteristics and weights. The list of favorable characteristics for this system may be summarized as follows:

1. The drive system requires no rotating machines or mechanical switches (other than on-off contactors) and thus provides both thrust power and dynamic braking with all solid state equipment.
2. The efficiency of the drive is about 75% which becomes more significant in light of the fact that the auxiliary power requirements are low (no need for rotating machine field power or dc power supplies for LIM dynamic braking).
3. The system operates continually over the full required frequency range which eliminates the need for special controls and equipment. No main-power transformers need be carried on board the vehicle.
4. The natural commutated inverter circuit provides very dependable thyristor commutation and low dv/dt stresses.
5. The inverter allows operation from a fixed dc power source (provided by a 3-phase rectifier) which yields a high and fixed power factor.
6. The control system is conceptually simple and has no inherent saturation or sensitivity characteristics which would tend to adversely affect system operating stability.
7. The natural commutated inverter's capability for forced dynamic and static current and voltage sharing allows it to lend itself more easily to scaling to high power levels; it also has the capability of bilateral power transfer without additional power conversion equipment.

Some of the more important design disadvantages and design difficulties are:

1. A very large number of thyristor devices are required for the natural commutated inverter, and currents and voltages are very high for such circuitry. This makes the equipment heavy.

2. Both rectifiers and inverters must operate at voltage and current levels making series-paralleling of devices mandatory. This requirement, which is common to all approaches using solid state devices, reduces the circuit efficiencies and adds weight.

3. Capacitor banks of very large energy storage and ripple current capability must be provided for the natural commutated inverter. This adds significantly to the inverter weight.

4. The dc voltage at the natural commutated inverter input has the same polarity during reversed power flow. This characteristic makes it necessary to provide a line commutated inverter in parallel with the rectifier circuit to regenerate the energy back to the three-phase lines. This requirement increases the total number of thyristor devices in the system. The results are sum-

The results are summarized in the following:

Weight - Two systems are considered: one using conventional air cooled equipment and another using an advanced design employing liquid cooling. The total drive system weight is estimated at 24,000 lbs and 14,500 lbs respectively. The specific weights (relative to the real rated LIM power) are 6.9 and 3.8 lbs/kW respectively.

Design - The high voltage of operation for the rectifier-inverter circuits makes it necessary to develop reliable series-connected modules. Such design work is being carried out extensively today and is considered well

within the state-of-the-art. Parallel connection of the thyristors for operation at a few thousand amps at 5 kHz, however, presents an especially difficult design problem.

Operation - The operation of the system is achieved by means of conventional feedback control loops using a tachometer for LIM speed sensing and a voltage detector for LIM power level sensing. The control system is conceptually simple and should provide continuous control over the entire dynamic operating range including dynamic braking. A special design effort may be required in the area of the rectifier and line commutated inverter control logic to insure smooth transient operation especially during the thrust-to-braking change-over.

Solid State Devices - Both thyristors and diodes are available (from manufacturers such as G.E. and National Electronics) which have ratings commensurate with the switching speed and current requirements of the system rectifier and inverters. Recent investigations indicate, however, that the voltage stress per device may have to be limited to about 1000 volts (even if the device voltage rating greatly exceeds this level). A series string of 10 to 15 would therefore have to be employed. This number may have to be increased considerably if voltage transient suppressors cannot be relied on to hold the voltage sufficiently low.

Reactive and Harmonic Power - The reactive power required by the LIM is delivered by the natural commutated inverter and supplied by the dc capacitor bank. Therefore, the reactive power only results in a slightly higher power loss. During acceleration and cruise, the rectifier operates with full dc voltage and the reactive power is therefore low. During deceleration, however, the line commutated inverter must provide a varying dc-to-ac voltage ratio and the reactive power is high

at low speeds. The current drawn is essentially a square wave and will introduce a large amount of harmonics in the power rail system. These are special problems which must be carefully considered during the design of the wayside power system.

Potential - It is felt that the high current-high voltage design problems and the large number of thyristors required for the natural commutated inverter makes it difficult to satisfy the weight requirements for the power conditioner.

3.5 FORCED COMMUTATED INVERTER POWER CONDITIONER

3.5.1 Introduction

A forced commutated inverter circuit is considered here as an adjustable-frequency power source for the LIM. This inverter can operate from a voltage source directly into the LIM without the need of an ac capacitor, such as a synchronous condenser. However, such inverters do depend on both capacitors and inductors of significant weight and size for thyristor commutation. The dc power is provided by a phase-delay rectifier similar to that used for the line-commutated inverter system. The rectifier in this drive system cannot provide regenerative braking unless a polarity-reversing switch, or an additional line-commutated inverter, is used.

A design of the forced commutated drive system, using an additional inverter for regenerative braking, is carried out in this section; it leads to a set of design specifications which are tabulated. A discussion is also included in this section to indicate possible alternate design avenues that may be taken.

"Conventional" and "advanced" designs are considered for the purpose of weight comparison. Finally, a basic control system is discussed together with operating profiles.

3.5.2 Description

3.5.2.1 System Block Diagram - A block diagram of the drive system using the forced commutated inverter is shown in Figure 3.25. The operating frequency of the inverter is controlled by adjusting the repetition rate of the thyristor firing pulses. The voltage of the three-phase inverter output is controlled by adjusting the firing angle of the thyristors in the phase-controlled rectifier. This adjustment sets the dc voltage source level, and consequently, the ac voltage level at the inverter output. An alternate method of achieving the inverter output voltage adjustment is discussed in Section 3.5.4.

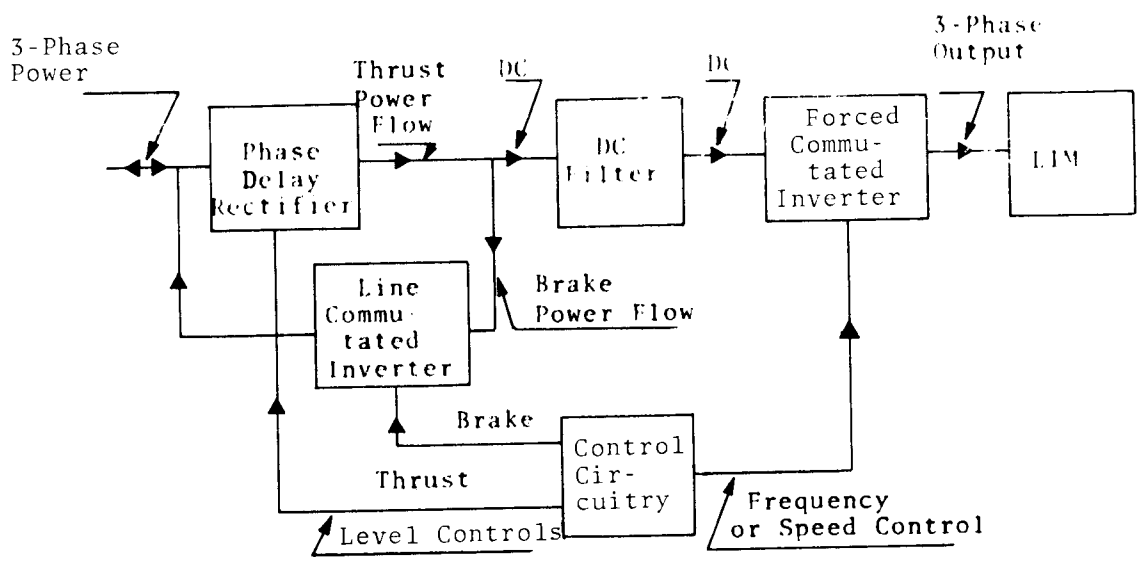

Figure 3.25 Block Diagram of Forced Commutated Inverter Drive System

During acceleration and cruise, power flows from the three-phase power collectors through the rectifier and dc filter to the inverter. During deceleration, the power flow must reverse. However, the phase-controlled rectifier cannot perform the function of a line-commutated inverter, due to the polarity of the dc voltage. (The polarity must reverse for this rectifier circuit operation.) A second circuit, similar to the rectifier but with reversed thyristors and operating as an inverter, is used in the system of Figure 3.25 to accommodate the reversed power flow during the braking mode. (A polarity-reversing switch may be used in lieu of this second circuit. This approach however, has a damaging impact on the system reliability and is not considered here.)

During start-up of the vehicle, the inverter is triggered at the frequency which yields maximum LIM thrust at a slip of unity, and the rectifier firing angle is advanced from 90° to yield dc and ac operating levels corresponding to the required thrust. As the LIM accelerates, both frequency and voltage levels are increased. The frequency is increased in such a way that the slip is held constant and the voltage level is held approximately proportional to the frequency. As a result, the thrust is constant throughout the accelerating period. During cruise, both variables are controlled, providing satisfactory speed regulation by virtue of the steep thrust-to-slip curve of the LIM.

During the braking mode, the frequency of the forced commutated inverter is reduced to provide negative slip. Dc power then flows back through the filter, and the line-commutated inverter must be controlled through adjustment of its firing angle to regenerate the right amount of power, providing the correct variation of the dc voltage with LIM speed. Details of the profiles during the three modes of operation are discussed in Section 3.5.5.

3.5.2.2 Rectifier-Inverter Circuits - A simplified schematic diagram of the rectifier-inverter circuits is shown in Figure 3.26. A single thyristor device is shown in each leg of all the circuits.

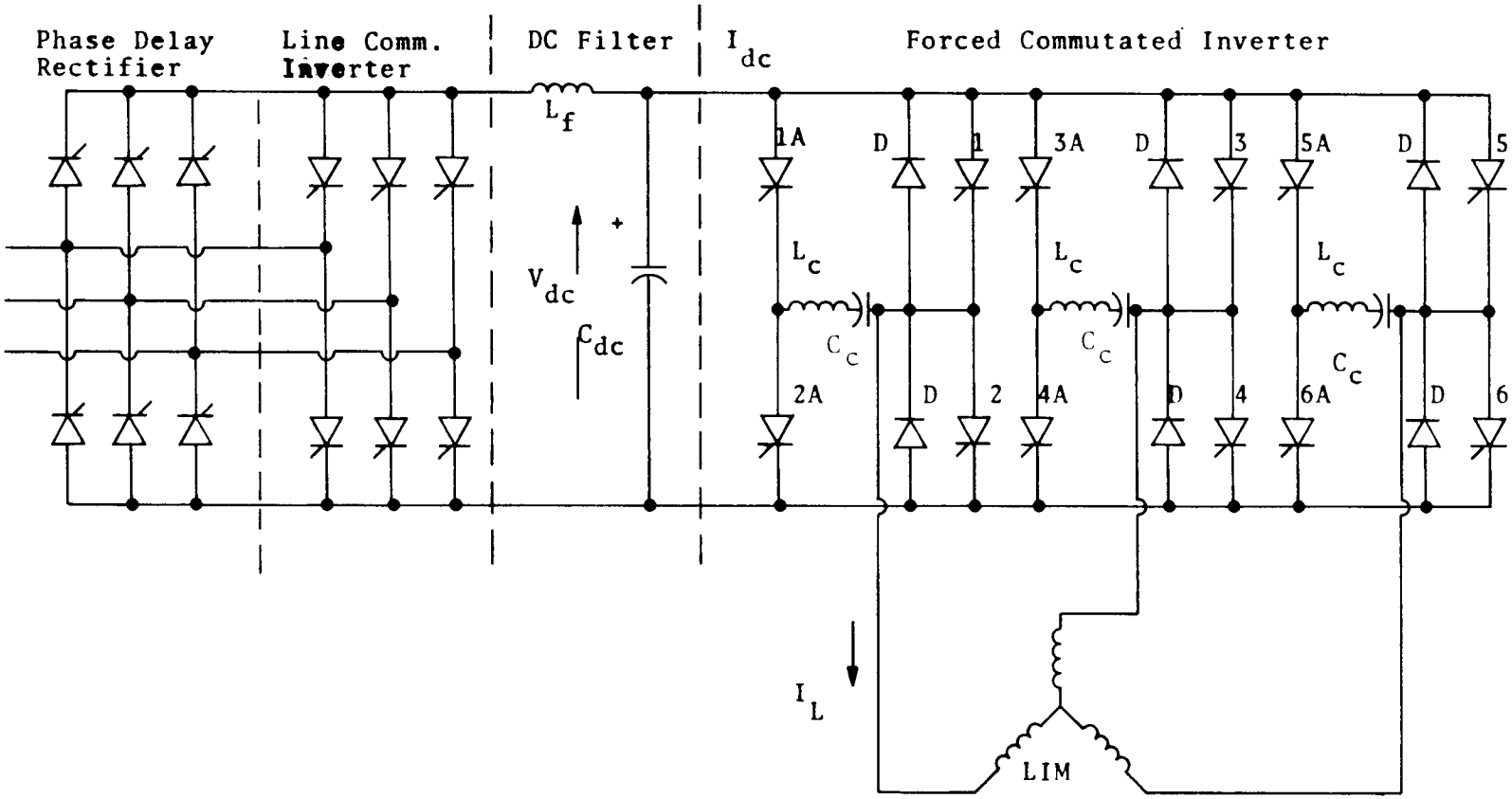

Figure 3.26 Rectifier-Inverter Circuits

Because of the very large power-handling requirement, the thyristors must, in the actual design, be series-connected for high voltage operation, and/or parallel-connected for high currents. The methods normally used, and the impact of parallel/series thyristors on the design characteristics, are discussed in Section 3.4.2. The simplified circuits of Figure 3.26 are used here, however, for the purpose of arriving at the basic design parameters.

The phase-delay rectifier and line-commutated inverter circuits to the left in Figure 3.26 are similar, and their operation is extensively treated in the literature[3,4].

During acceleration and cruise, the thyristors of the inverter are not fired. Similarly, during the braking mode, the rectifier thyristors are left inactive. The purpose of the capacitor C_{dc} is to provide a relatively low-impedance voltage source to the forced commutated inverter, and the inductor L_F provides separation between the capacitor voltage and the rectifier-inverter circuits. (The line-commutated inverter must operate from a dc source with a high impedance at the 360 Hz ripple frequency. This characteristic is provided by the inductor, L_f.)

Several thyristor circuits have been developed for forced commutation in inverters. A circuit developed by McMurray is used here which employs a resonant circuit L_C and C_C in Figure 3.26 and two auxiliary thyristors marked 1A to 6A for the generation of the commutating pulse. The operation of this commutating circuit is explained in detail in Appendix B. The commutating pulse is short compared to the period of the inverter, but the current level in this pulse must exceed the maximum inverter output current. This requirement usually gives rise to the need for relatively large commutating capacitors, as is seen in the design portion of this section.

A three-phase output voltage is generated across the winding terminals of the LIM by sequential firing of the thyristors. The firing sequence of the main thyristors is shown in the upper part of Figure 3.27. Also illustrated are the voltages that occur

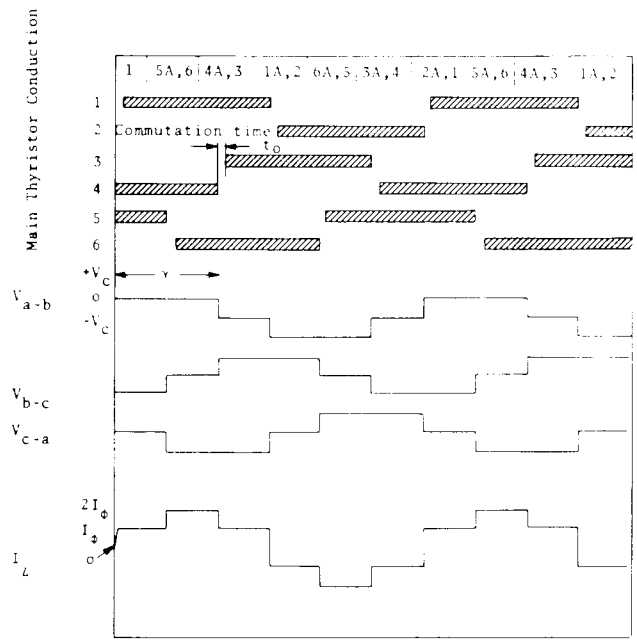

Figure 3.27 Thyristor Firing Sequence and On Time With Phase Voltages and Currents in One Phase Assuming a Pure Resistive Load

across each phase winding of the LIM load and one of the inverter phase currents assuming a pure resistive load. It should be noted that the load phase current $I\phi$ for a Δ load configuration* is 1/2 of the peak value of the inverter output current, I_L, as indicated. The current from the dc supply, I_{dc}, therefore, is equal to the peak of I_L, and constant when the inverter is resistively loaded. When the load is inductive, as is the case with the LIM, the diodes, D, in Figure 3.26 carries the reactive component of the load back to the dc source and result in a very significant ripple component in I_{dc}. In turn, this ripple current places very significant requirements on the filter capacitor, C_{dc}. This, and other inverter characteristics, are dealt with in more detail in the design section which follows. An alternate method of achieving inverter output adjustment is to pulse the thyristors during their normal on period. This is discussed in Section 3.5.4.

* A Δ configuration is not required.

3.5.2.2.1 Surge Voltage Protection - Protection against surge voltages is a particularly difficult problem with thyristor circuits, since very narrow spikes of over-voltage can fire a thyristor and result in failure. The so-called "RC snubber circuits" that are used in parallel with each device give some protection (their primary purpose is to reduce reapplied dv/dt), but high power surges must be protected against by other means.

The overriding problem in an application in which the power is taken directly off the high voltage lines (no separation transformer) is adequate protection against surges caused by lightning. Protection must include lightning arrestors and capacitor-diode circuits which discharge over-voltage surges. In addition to this protection, the thyristor circuitry must be designed to withstand a substantial over-voltage. This overrating becomes the circuit safety margin which, for these applications, is a factor of two to three. (It should be noted that it is not adequate merely to determine voltage surge rating from manufacturers' peak voltage and dv/dt ratings, but from actual tests, as are discussed in Section 3.5.3.1.)

3.5.3 System Design

Requirements and specifications are worked out in the following sections for a drive system making use of a LIM developing a rated thrust of 5000 lb over a zero to 300 mph speed range. Specific efforts are made to minimize the size and weights of the major components of the system, employing special cooling and designs where considered necessary and feasible.

3.5.3.1 Forced Commutated Inverter

3.5.3.1.1 Dc Voltage Range - Harmonic analysis of the inverter output voltage waveform yields the following expression for the rms of the fundamental[3]

$$(V_{a-b})_f = \frac{2\sqrt{2}}{\pi} V_{dc} \sin \frac{\tau}{2} \text{ (rms)} \qquad (3.39)$$

where Υ is the angle extent of the V_{a-b} square wave, which for this waveform is 120° (Figure 3.27). Solving Equation (3.39) for V_{dc} we get

$$V_{dc} = \frac{\pi}{2\sqrt{2}\sin 60°}(V_{a-b})_f = 1.28(V_{a-b})_f \ . \qquad (3.40)$$

The desired line-line ac voltage range for the LIM is 1330 to 7.50, giving

$$1700 \leq V_{dc} \leq 9150.$$

In addition to the voltage given by Equation (3.40) comes the drop across the thyristors and feedback diodes. This relatively small thyristor/diode drop ($< 0.5\%$ of V_{dc}) is neglected here.

3.5.3.1.2 Commutation Circuit Components - To achieve proper commutation, the current pulse through L_c and C_c in Figure 3.26 must exceed the inverter load current at the time of commutation for a specified commutation period, t_o. The minimum physical sizes of the components is those that deliver this pulse with the minimum peak energy

$$(W)_{min} = \frac{1}{2} C_{c1}(V_c)^2 \text{ peak} = \frac{1}{2} L_{c1} (I_c)^2 \text{ peak}. \qquad (3.41)$$

The values of C_{c1} and L_{c1} have been derived in Reference 3 and are expressed as follows

$$L_{c1} = 0.397 \frac{V_{c1} t_o}{I_{L1}} \ , \qquad (3.42)$$

$$C_{c1} = 0.893 \frac{I_{L1} t_o}{V_{c1}} \ , \qquad (3.43)$$

where V_{c1} is the peak capacitor voltage and I_{L1} is the value of the load current (I_L in Figure 3.26) at the time of commutation.

The value of I_{L1} depends on both the amplitude and the power factor. With reference to Figure 3.27, we see that for a small amount of inductance in the load circuit, the PF will be close to unity. With more inductance and lower PF, the current waveform will be rounded off and shifted to the right with respect to the thyristor firing sequence.

At a power factor of 0.7, an R-L load has a "roll-off" (or "break") frequency which is equal to the frequency of operation. Harmonics in the current through this load are therefore attenuated by 6 x (n-1) dB, where n is the harmonic number. Harmonic analysis shows that the first harmonic of the I_L waveform in Figure 3.27 is the 5th[3]. This first significant harmonic is therefore attenuated by 24 dB. For this reason, it is valid in an approximate analysis to assume that the current I_L in a PF load from 0.7 and down is nearly sinusoidal. With this assumption, the value of I_L at commutation is equal to the value of $(I_L)_{peak} \times \sin\theta$. Using the values for I_L required by the LIM, we get

$$(I_{L1})_{330\ Hz} = \sqrt{2} \times 780 \times \sin 54.5 = 895 \text{ Amps}$$

and

$$(I_{L2})_{53\ Hz} = \sqrt{2} \times 780 \times \sin 44.32° = 770 \text{ Amps.}$$

In the choice of peak capacitor voltage V_{C1}, it should be kept in mind that the dc operating voltage, V_{dc}, varies over a range of 1:0.2, and that the no-load value of V_C is approximately equal to V_{dc}. Furthermore, when the load is inductive, the feedback diodes (D in Figure 3.26) allows the reactive load energy to interact with the commutation energy and "pump" the capacitor voltage to higher levels. The rate of rise of V_C with I_L depends on both the load PF and the Q of the commutating circuit. For further calculation, we make the following assumptions:

1. The commutating circuit is designed such that the rise of V_C is commensurate with the requirements for commutating power. (This involves additional circuitry, as discussed in Section 3.4.3.)

2. Some nonlinear network is included in the circuit to limit V_C to 10,000 V, or 10% higher than the highest value of V_{dc}.

In the calculation of the L and C values for the commutating circuit, therefore, we use

$$V_{C1} = 10{,}000\text{V}, \quad I_{L1} = 895\text{A}$$

and

$$t_o = 30\ \mu\text{sec for worst case*},$$

giving

$$L_{C1} = 0.397\ \frac{10{,}000 \times 3 \times 10^{-5}}{895} = 133\ \mu\text{H}$$

and

$$C_{C1} = 0.893\ \frac{895 \times 3 \times 10^{-5}}{10{,}000} = 2.4\ \mu\text{F}.$$

The voltage that the commutating thyristors, 1A to 6A in Figure 3.26, must block is equal to the maximum value of V_{C1}, or 10,000 volts. The peak current in the commutating circuit is

$$I_C = V_{C1}\sqrt{\frac{C_{C1}}{L_{C1}}}$$

* Typical turn-off time is in the range of 15-30 μsec for a number of high voltage-high current devices available.

$$= 10{,}000 \sqrt{\frac{2.9}{133}} = 1343 \text{ A},$$

and the maximum rms value

$$(I_C)_{rms} = \frac{1}{\sqrt{2}} I_C \sqrt{D},$$

where the duty factor D is the ratio of the commutating pulse duration to the inverter period. Thus,

$$\begin{aligned} D_{max} &= 330 \text{ (Hz)} \times 2\pi \sqrt{LC} \\ &= 330 \times 2\pi \sqrt{133 \times 2.4} \times 10^{-6} \\ &= 3.7 \times 10^{-2}, \end{aligned}$$

giving

$$(I_C)_{rms} = \frac{1343}{\sqrt{2}} \sqrt{3.7 \times 10^{-2}} = 183\text{A}.$$

3.5.3.1.3 Feedback Diodes and Main Thyristors - When the inverter load current lags the voltage, as is the case with the highly inductive LIM load, the "feedback" diodes shunting the thyristors provides the current path during the lag time interval. An illustration of the current flow in one of the three branches of the inverter is given in Figure 3.28a, where the dotted line indicates the current path momentarily after thyristor T_{H1} has been commutated. Current and voltage waveforms for a load power factor of 0.5 are shown in Figure 3.28b. The load current, which in the case of a resistive load is trapezoidal (Figure 3.27), becomes nearly sinusoidal when the load is inductive. When thyristor T_{H1} is commutated, the load current is switched to diode D2, resulting in a pulse current I_{D2}, as shown. The characteristics of this pulse are

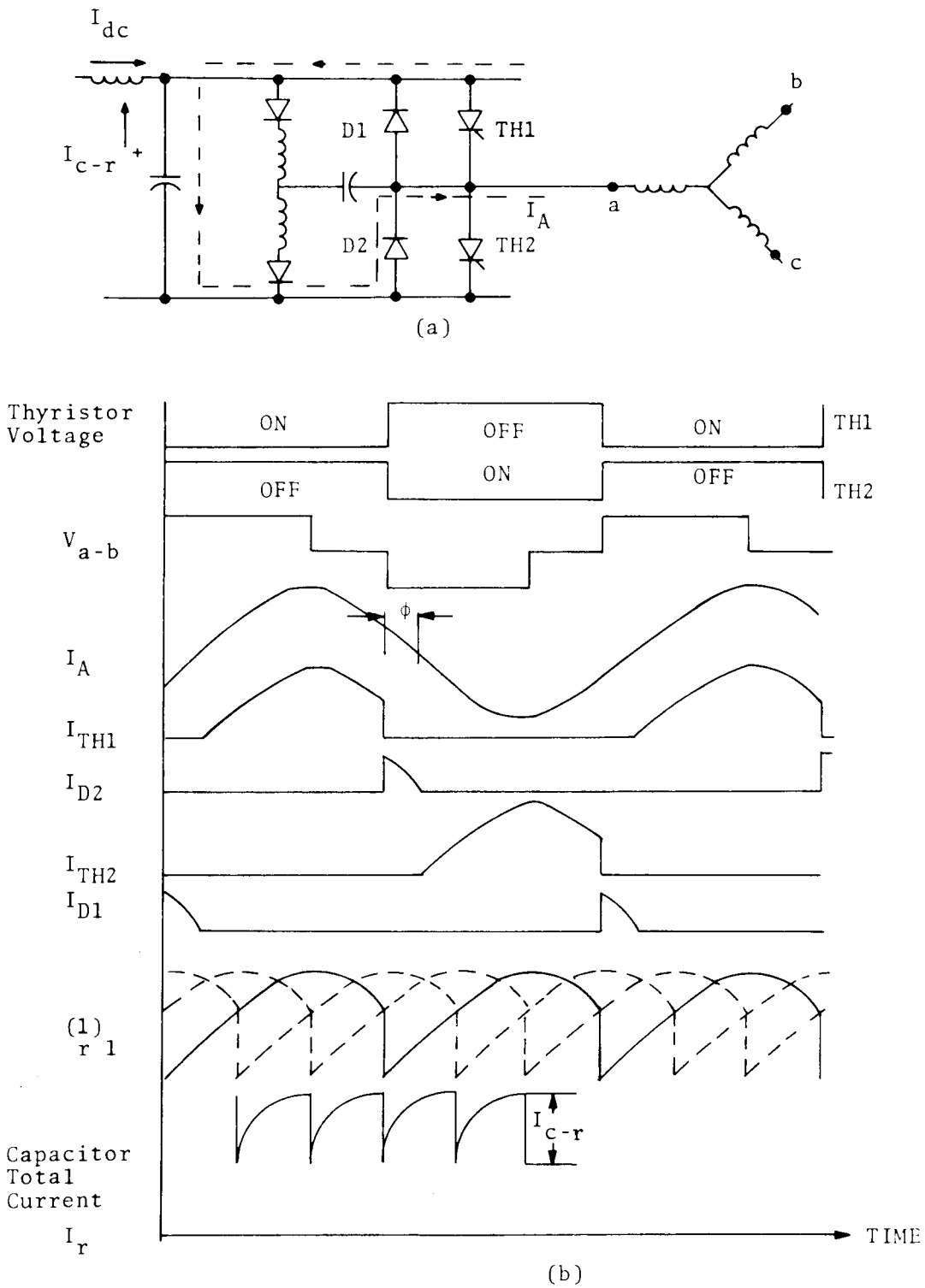

Figure 3.28 Waveforms for Inductive Loading

$$(I_D)_{av} = \frac{I_L}{\sqrt{2\pi}} \times (1 - \cos\phi) \tag{3.44}$$

$$(I_D)_{rms} = I_L \frac{1}{\sqrt{\pi}} \left(\frac{1}{2}\phi - \frac{1}{4}\sin 2\phi\right)^{1/2} \tag{3.45}$$

and

$$(I_D)_{peak} = \sqrt{2} I_L \sin\phi \tag{3.46}$$

where I_L is the rms value of the phase load current. Using the most severe load conditions of 780A and 54.5° lag angle, we get

$$(I_D)_{av} = \frac{780}{\sqrt{2\pi}} (1 - 0.58) = 73.6A$$

$$(I_D)_{rms} = \frac{780}{\sqrt{\pi}} (0.476 - 0.236)^{1/2} = 215A \text{ (rms)}$$

$$(I_D)_{peak} = \sqrt{2} \times 780 \times 0.766 = 845A.$$

The thyristor average and rms current levels can be calculated by Equations (3.44) and (3.45) by using an angle $\phi' = \pi - \phi$, since the thyristors conduct when the diodes do not. Thus,

$$(I_{TH})_{av} = \frac{780}{\sqrt{2}} (1 + 0.58) = 278A$$

$$(I_{TH})_{rms} = \frac{780}{\sqrt{\pi}} (1.10 + 0.236)^{1/2} = 507A.$$

The peak current is

$$(I_{TH})_{peak} = \sqrt{2} \times 780 = 1100A.$$

The maximum blocking voltage for both diodes and thyristors equals the maximum dc operating voltage, or 9000 volts. It is clear that series, and possibly parallel, connections must be employed to obtain the necessary ratings for the solid-state devices. This is considered state-of-the-art, and is discussed in the next section. A summary of the inverter specifications is given in Table 3.13.

TABLE 3.13 SPECIFICATIONS FOR FORCED COMMUTATED 6-THYRISTOR INVERTER

1.	Dc Operating Voltage Range	1700 to 9150V
2.	Ac Output Current	530A, 780A max. power
3.	Frequency Range	53 to 330 Hz
4.	Load Power Factor @ High Current	0.58 min
5.	MVA Capacity	4.6 MVA, 6.4 MVA max. power
6.	Commutating Capacitor	2.4 μF, 180A-rms, 10kV
7.	Commutating Inductor	133 μH, 180A-rms, 10kV
8.	Commutating Thyristors	130A-rms, 1343A-peak, 10kV
9.	Feedback Diodes	215A-rms, 845A-peak, 9kV
10.	Main Thyristors	507A-rms, 1100A-peak, 9kV

3.5.3.2 Series/Parallel Connection of Thyristors - The large power-handling requirement of the thyristor circuitry gives rise to a number of design problems over and above those that have been successfully dealt with in the past. These problems are mainly associated with the requirement for parallel/series connection of large numbers of thyristors and diodes and also the requirement for an adjustable range of LIM primary voltage at full current levels. If the thyristor circuits are designed to operate at voltage and current levels such as those given in Table 3.13, the current may be handled by a single thyristor. The voltage rating, however, requires a number of thyristors in series. In the series connection of thyristors, it becomes very important to assure uniform voltage division for all static and dynamic conditions. Circuits,

comprising capacitors, resistors, and a diode, have been designed which accomplish this successfully. Examples of such circuits are shown in Figure 3.29. Normally associated with the series-connected circuits are the disadvantages of additional power loss (typically 1%), and derating of the individual device operation voltage. The additional components also add significant weight, as does the trigger pulse transformer for thyristor firing, since these must be designed for higher isolating voltages.

Recent investigations (Reference 3) have revealed the fact that the voltage ratings of the thyristors have little correlation with their voltage breakdown characteristics. These investigations seem to indicate that the maximum surge voltages should be kept below 700 - 1000 V, even if the thyristor ratings exceed that voltage, for good reliability. Surge voltage testing of the thyristor modules is perhaps the best way to optimize the design.

These problems associated with series and parallel operation are discussed in more detail in Appendix C.

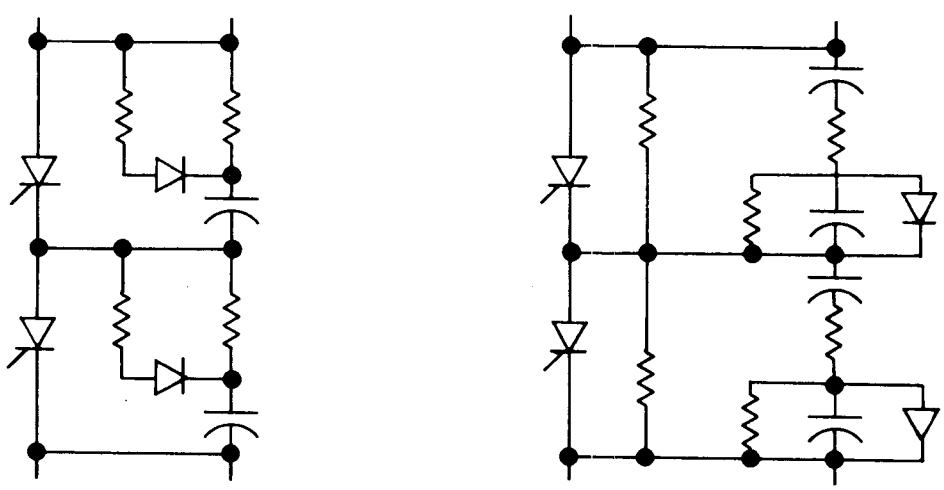

Figure 3.29 Equalizing Circuits for Series Connected Thyristors

3.5.3.3 Commutation Circuit - The commutation circuit in the simplified schematic diagram of Figure 3.26 is adequate for a relatively low and constant operating voltage. When the dc source voltage is varied over a significant range, the charge on the commutating capacitor varies, and the commutating current pulse may be inadequate at low voltage levels. It can be shown (Reference 1, Ch. 7.1) that an inductive inverter load interacts with the commutating resonant circuit, resulting in a higher commutating pulse. It is doubtful, however, that this interaction can be relied on, and a separate commutating pulse source is required. This pulse source can be connected to the commutating LC circuit by inductive coupling to L_c in Figure 3.26. Again, the addition of this equipment increases the overall weight and decreases the inverter efficiency.

Thyristor pulsing during their normal on time is an effective way to obtain a variation of the output voltage. This pulse-width modulation technique, which can be done (by careful sequencing) in such a way as to minimize the output harmonics, yields the required output adjustment range with a fixed dc source voltage. This greatly simplifies the commutating circuit design, but the advantage is at least partially outweighed by the higher losses in the thyristors when these are switched at a higher rate (a minimum of four times more often than without pulse-width modulation).

3.5.3.4 Dc Filter - The current flow through the feedback diodes resulting from a lagging load current flows into the dc filter capacitor (as indicated in Figure 3.28a) in a regenerative, or charging, direction. The dc current resulting from the flow through one of the three branches of the inverter is illustrated by the waveform for $(I_r)_1$ in Figure 3.28b. The magnitude of the abrupt change in $(I_r)_1$ is equal to twice the peak diode current (since the current $(I_r)_1$ changes direction at this instant of time). The total current from the filter is found by adding three waveforms

similar to $(I_r)_1$, but displaced 60 electrical degrees. The result is a dc current with a ripple peak-to-peak magnitude equal to the step change in I_{r1} as indicated by the waveform for I_r in Figure 3.28b. (Note that the average part of I_r is supplied by the rectifiers.) From Equation (3.46), we have therefore

$$I_{c-r} = 2\sqrt{2}\, I_L \sin\phi. \tag{3.47}$$

The size of the capacitor C_{dc} is conservatively estimated by assuming a sawtooth ripple current waveform. The ripple voltage produced by the ripple current (assuming a ripple-free supply current through L_f) is then

$$\Delta V_{dc} = \frac{1}{C_{dc}} \int_0^{1/f_r} I_{c-r} \frac{t}{1/f_r}\, dt = \frac{1}{2} \frac{I_{c-r}}{C_{dc} f_r} .$$

This gives

$$C_{dc} = \frac{1}{2} \frac{I_{c-r}}{\Delta V_{dc}\, f_r} \tag{3.48}$$

where f_r is the ripple frequency. The minimum value of C_{dc} is obtained by selecting the maximum value of ΔV_{dc}. Also, since the value of I_{c-r} differs little from low to high frequency of operation, the largest required value of C_{dc} must be at the low operating frequency. We shall set the value of ΔV_{dc} at 25% of the minimum operating voltage which is considered the highest practical level.* Thus

* The effects of high ripple voltages are primarily distortion of the output waveform, resulting in a reduction of inverter and LIM efficiencies. The optimum value of ΔV_{dc} may be quite different from the 25% used here, and can be determined only by more extensive analysis and/or tests.

$$\Delta V_{dc} = 1795 \times 0.25 = 449 \text{ V}.$$

At the low operating voltage, the ripple current becomes Equation (3.47)

$$I_{c-r} = 2\sqrt{2} \times 780 \times \sin 54.5° = 1610\text{A p-p}. \qquad (3.49)$$

With the ripple frequency at 6 x 53 Hz, Equation (3.49) gives

$$C_{dc} = \frac{1}{2} \frac{1610}{449 \times 6 \times 53} = 5640 \ \mu\text{F}.$$

This capacitor bank must support up to 9150V and handle a ripple current of approximately

$$(I_{c-4})_{rms} = \frac{1}{2\sqrt{2}} 1610 = 570\text{A rms}.$$

It is shown in Section 3.5.3.7 that this capacitor may be made up of a bank of electrolytic capacitors weighing a total of 3000 - 4000 lbs.

The filter inductor L_f in Figure 3.26 must support both the rectifier output ripple (at 360 Hz) and the 318 Hz voltage ripple at the capacitor. The larger of the two, by far, is the 360 Hz rectifier ripple. The maximum levels of the rectifier ripple occur at the low levels of the average rectifier output, and appear as illustrated in Figure 3.30. The inductance required for a given ripple current I_r is found from the basic equation

$$I_r = \frac{1}{L_f} \int_0^{\Delta T} e_r \, dt, \qquad (3.50)$$

where ΔT is defined in Figure 3.30, and where also the peak value of the ripple voltage e_r can be seen to be $\sqrt{2}\ V_1 \sin \pi/3$.

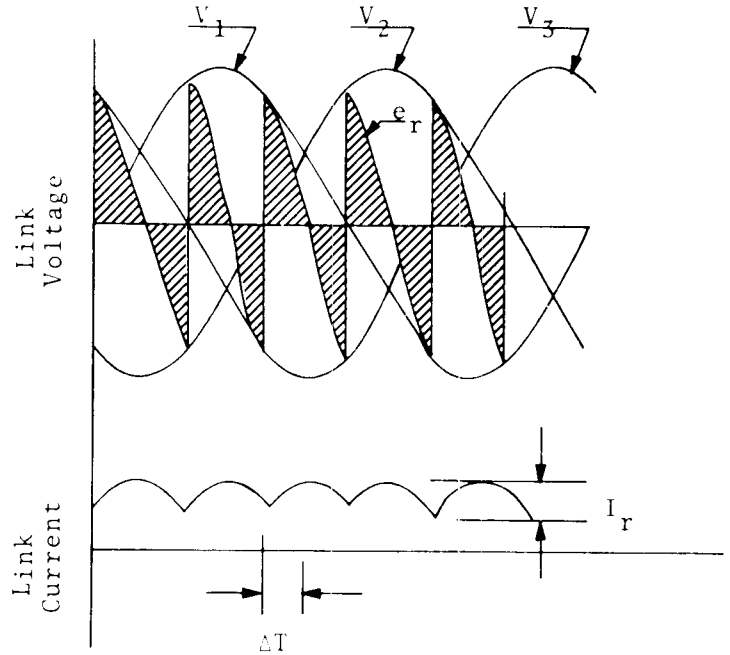

Figure 3.30 Rectifier Output Voltage and Link Current for Low Dc Link Voltage at Low Power and Speed

Approximating the ripple voltage by a sawtooth waveform, we get

$$e_r = \sqrt{2}\ V_1\ (1 - \frac{t}{\Delta T})\ \sin \pi/3. \qquad (3.51)$$

Substituting Equation (3.51) into (3.50) and solving for L_f, we get

$$L_f = \frac{1}{2}\sqrt{\frac{3}{2}}\ \frac{V_1 \Delta T}{I_r}\ . \qquad (3.52)$$

The capacitor ripple current load (to the inverter) was found to be 1610A p-p at 318 Hz. We shall assume that a capacitor input ripple of 20% of the 1610A is sufficiently low to prevent 360 Hz interference with the inverter operation. Thus, using a value of I_r = 320A at 360 Hz, ΔT = 1/12 x 60, and $V_1 = 1/\sqrt{3}$ x 8000V in Equation (3.52):

$$L_f = \frac{1}{2\sqrt{2}} \frac{8000}{320 \times 12 \times 60} = 12.3 \text{ mH.}$$

Specifications for the dc filter are summarized in Table 3.14.

TABLE 3.14 SPECIFICATIONS FOR DC FILTER	
1. Capacitor (Electrolytic)	5,640 μF
Max. Operating Voltage	9,150V
Ripple Current[1]	1,610A, p-p 570A-rms
2. Inductor (Air Core)	12.5 mH
Dc Current[1,2]	710A
Ripple Voltage	5,650V peak
Dc Resistance[3]	0.1Ω

Notes

1. At 150% thrust
2. Estimated at 88% inverter efficiency
3. At 1% loss of peak inverter power

3.5.3.5 Phase-Delay Rectifier - The rectifier output voltage is expressed as follows[4]

$$V_{dc} = \frac{3\sqrt{2}}{\pi} V_{\ell\ell} \cos \alpha - \frac{3x_\ell}{\pi} I_{dc} \tag{3.53}$$

where x_ℓ is the reactance of the feedlines. Equation (3.53) may be rewritten in terms of the per-unit line supply reactance x_ℓ as follows

$$V_{dc} = \frac{3}{\pi} V_{\ell-\ell} \left(\sqrt{2} \cos \alpha - X_\ell\right). \tag{3.54}$$

Assume a minimum of $\alpha = 10°$ and a supply system reactance of X_ℓ = 0.10 pu, and solve for Equation (3.45) for $V_{\ell\ell}$

$$V_{\ell\ell} = \frac{9150 \times \pi}{3(1.41 \times 0.985 - 0.1)} = 7450V \text{ (rms)}.$$

A thyristor drop of 0.5% must be added to this voltage.

The current in any of the rectifier thyristors is approximately a square wave, and flows during one third of a 60 Hz cycle. The current characteristics are therefore as follows

$$(I_{TH})_{av} = \frac{1}{3} \times I_f = 240A$$

and

$$(I_{TH})_{rms} = \frac{1}{\sqrt{3}} I_f = 415A.$$

Specifications for the rectifier are given in Table 3.15.

TABLE 3.15 SPECIFICATIONS FOR PHASE-DELAY RECTIFIER AND LINE-COMMUTATED INVERTER

1. Maximum Dc Voltage	9150V
2. Maximum Current	720A
3. Power Rail Voltage	7800V ±5% rms
4. Assumed Feedline Reactance	0.1 pu
5. Power Rating	4.6 MW cruising 6.65 MW max.

3.5.3.6 Line-Commutated Inverter - The operating voltages for the line-commutated inverter are the same as those for the rectifier. The current level and duty is lower, but it is not expected to have any significant impact on the choice of thyristors, method of cooling, etc. Thus, it is assumed that the

specifications for the rectifier and inverter are the same as indicated in Table 3.15. It is also assumed that the thyristors for both functions can be mounted on the same heat sink, and in that way reduce the weight and volume.

3.5.3.7 Component Weights - The component weights are estimated for air-cooled and liquid-cooled equipment and listed in Tables 3.16 and 3.17, respectively. The sources of the data and the reasoning for the final figures are given in the following.

TABLE 3.16 WEIGHT OF COMPONENTS FOR THE DRIVE SYSTEM USING A FORCED COMMUTATED INVERTER: CONVENTIONAL DESIGN

Component	Specification	Specific Weight	Weight
F.C. Inverter[1,2]	4.4×10^3kW, 10k Vdc, 7.15k Vac, 330 Hz	0.795 lb/kW	3490 lbs
Dc Filter Capacitor (Electrolytic)	9000μF, 10k Vdc 570A ripple (rms)		4100 lbs
Dc Inductor[1] (Air core)	12.5 mH, 475A 5650V peak ripple 0.1Ω resistance		440 lbs
Phase-delay Rectifier[1,2] and Line-Comm. Inverter	4.6×10^3 kW, 10k Vdc, 7.15kVac, 60 Hz, 20 kV surge	0.8 lb/kW	3680 lbs
Total[3]		3.08 lb/kW	11,710 lbs

Notes

1. All components must have a 150% overload, 1 min. rating
2. Forced air cooling
3. Specific weight relative to LIM power

TABLE 3.17 WEIGHT OF COMPONENTS FOR THE DRIVE SYSTEM USING A FORCED COMMUTATED INVERTER: ADVANCED DESIGN

Component	Specification	Specific Weight	Weight
F.C. Inverter[1,2]	4.4×10^3kW, 10k Vdc, 7.15k Vac, 300 Hz	0.465 lb/kW	2050 lbs
Dc Filter Capacitor (Electrolytic)	6500μF, 10k Vdc 570A ripple (rms) peak		3100 lbs
Dc Inductor	12.5 mH, 710A, 0.012Ω, 5650V peak ripple		200 lbs
Phase-delay Rectifier[1,2] and Line-Comm. Inverter	4.6×10^3kW, 10k Vdc, 7.15K Vac, 20 kV surge	0.4 lb/kW	1840 lbs
Total[3]		1.90 lb/kW	7210 lbs

Notes

1. All components must have a 150% overload, 1 min. rating
2. Liquid cooling
3. Specific weight relative to LIM power

3.5.3.7.1 Forced Commutated Inverter - Estimates of the weight of this circuit are made by separating it into two parts: one containing the main power thyristors and diodes, and another comprising the commutating circuits. For estimates of the main power components, we use Reference 5, giving typical weights for three-phase rectifiers projected for 1973. The weight of the commutating circuit is estimated directly by component count. A breakdown summary is shown below.

1.	Main power components @ 0.4 lb/kW and 4.4 MW	1760 lbs
2.	Commutating circuit	
	Thyristors @ 0.2 lb/kW and 4.4 MW	880 lbs
	Capacitors (G.E. Polycarbonate)	
	17 caps, 10 μF, 600V in series, Four strings in parallel } x 3	420 lbs
	Inductors, air-core, 1/2" Litz cable, approx. 12" D., 20" L, 35 turns: } x 3	230 lbs
	Hardware	200 lbs
	Total	3490 lbs

Specific weight 3490 lb/4400 kW = 0.795 lb/kW

If liquid cooling is used for the thyristors and diodes, it is assumed that the weight of these assemblies are reduced by 50%. For the "advanced" design, we assume liquid cooling and a 10% improvement of the weight of the commutation circuits, giving a total of 2050 lbs and 0.465 lb/kW.

3.5.3.7.2 Dc Filter - Aluminum computer-grade capacitors are used for the estimate of the weight of this capacitor bank. These capacitors are not made to operate at voltages above 450V, which makes it necessary to use a minimum of 22 capacitors in series for a 10 kV rating. Use of G.E. type 86F, 1900 μF, 450V each (dimensions: 3" D x 5.64" Ht) yields 86.5 μF per capacitor string. A total of 75 parallel strings are then required for the 6500 μF called for. However, since the ripple current per capacitor must not exceed 5.5A (at 330 Hz and 55°C), the total number of parallel strings required for 570A is 104, giving a total capacitance of 9000 μF.

The weight of these 2288 capacitors is approximately 3400 lbs. In addition to the capacitors, weight is allowed for an equal number of resistors for equalization of the potential across the capacitors. Another 300 lbs is allotted for these resistors. Finally, there is mounting hardware for both capacitors and resistors, estimated at 400 lbs, giving a total of 4100 lbs for the dc capacitor bank.

If the capacitor bank is liquid-cooled and kept at a temperature not exceeding 40°C, the number of parallel strings is dropped to 75, giving a total of 6500 F capacitance. The weight in this "advanced" design case would be approximately 3/4 x 4100 ≅ 3100 lbs.

For the dc inductor, we assume a design similar to the Garret light weight, liquid-cooled aluminum air-core inductor. For this design, a specific weight is calculated of

$$w = \frac{\text{Weight}}{\text{Stored Energy}}$$

$$= \frac{410 \text{ lbs}}{\frac{1}{2} \times 2.3 \times 10^{-2} \times 680^2} = 0.07 \text{ lb/Joule}$$

Thus, for the 12 mH inductor, we use

$$\text{weight} = 0.07 \times \frac{1}{2} \times 1.2 \times 10^{-2} \times 720^2$$

$$= 200 \text{ lbs}$$

With air cooling, we assume a weight of twice the 220 lbs, or or 440 lbs.

3.5.3.7.3 Phase Delay Rectifier and Line-Commutated Inverter - The same sources are used here as for the main power components, except that 50% is added for the line-commutated inverter thyristors and another 50% for surge voltage suppression circuitry. Thus, for the conventional design, we use 0.8 lb/kW, and for the advanced design, using liquid cooling, 0.4 lb/kW.

3.5.4 Control System Design

A block diagram of a control system for the LIM drive using the forced commutated inverter is shown in Figure 3.31. The control design is based on the following approach:

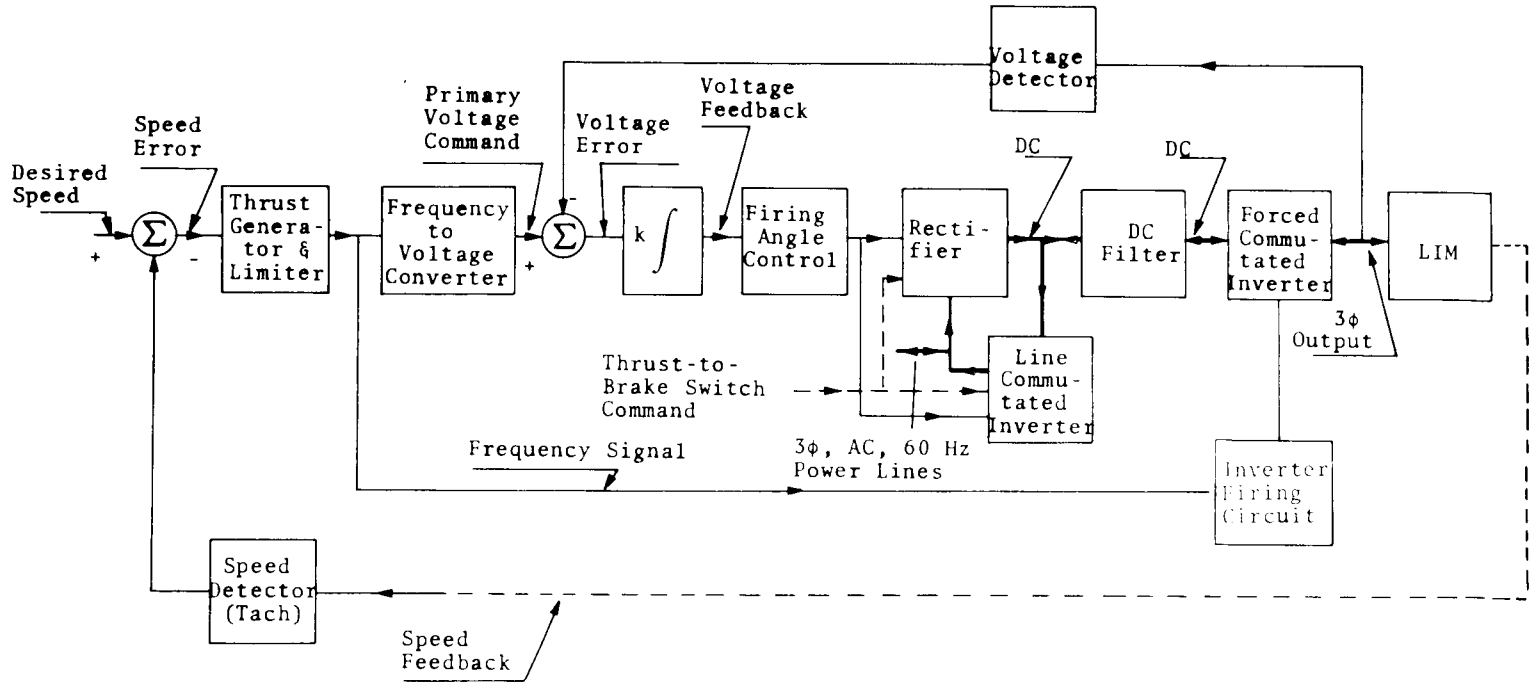

Figure 3.31 Block Diagram of LIM Drive System Control

1. The LIM thrust is made proportional to the motor "slip" by controlling the motor primary voltage so that it becomes proportional to its frequency.
2. The frequency of the primary voltage is made proportional to a signal obtained by integrating the difference, or "error", between a desired speed signal and a measurement of the LIM speed.
3. The frequency command signal is subjected to a function which limits the thrust when the above "error" is large.

The block labeled "Thrust Generator and Limiter" in Figure 3.31 performs the functions of 1 and 2 above by producing a LIM operating frequency

$$f = k\int (\Delta f_c - \Delta f_m)dt, \tag{3.55}$$

where the measured "slip frequency" is

$$\Delta f_m = f - f_m \tag{3.56}$$

and the command slip frequency is

$$\Delta f_c = \begin{cases} f_d - f_m \; ; \; < \Delta f_{max} \\ \Delta f_{max} \; ; \; > \Delta f_{max} \end{cases} . \tag{3.57}$$

The frequency f_m in the above equation is a signal proportional to the measured vehicle speed and f_d the desired vehicle speed. When $\Delta f_c < \Delta f_{max}$, the frequency command becomes

$$f = k\int (f_d - f)dt \; , \tag{3.58}$$

which indicates that the frequency of operation will remain fixed when the desired speed f_d is reached. This is the condition

during vehicle cruise. (Vehicle speed is held relatively constant by the steep slope of the thrust-speed motor characteristics.) During acceleration, when $f_d >> f_m$, the frequency f becomes

$$f = k\int [\Delta f_{max} - (f - \Delta f_m)]dt \ , \tag{3.59}$$

indicating that, after a transient (with a time constant 1/k) during which the frequency f rises, the steady-state conditions is reached when

$$f = \Delta f_{max} + f_m \ , \tag{3.60}$$

which is the constant slip condition giving a near constant, and maximum, acceleration. During deceleration, when regeneration braking is used, the operation is the same, except that a limit $-\Delta f_{max}$ is employed.

The operating frequency command is fed to the forced commutated inverter firing circuit, giving the desired LIM drive frequency. To obtain the corresponding primary voltage, a voltage command is produced in a "frequency-to-voltage converter" from the operating frequency signal and used as a command for an LIM primary voltage control loop. An integrator in the voltage control loop provides a firing angle command in response to the voltage loop error signal. In the acceleration and cruise modes of operation, the firing angle command is fed to the rectifier circuit, which provides the corresponding (desired) dc output voltage. When the braking mode is entered, the rectifier action is inhibited (by the thrust-to-brake switch command shown by the dotted lines in Figure 3.31), and the angle control is fed to the line-commutated inverter. A transient follows this switchover, during which the error in the voltage control loop drops to zero as the correct firing angle for the line-commutated inverter is reached. The rate of change of the frequency command signal must be limited (by proper choice of k in Equations (3.59) and (3.60), and the

point of rectifier-inverter switchover must be properly timed, to prevent both excessive current and voltage transients.

3.5.5 Operation

The operation profiles of the forced commutated drive system are illustrated in Figures 3.29, 3.30, 3.31, 3.32, 3.33, and 3.34. A short discussion of these profiles for each of the three modes of operation is given in the following. The LIM and system input power profiles are also discussed.

3.5.5.1 Acceleration - Vehicle acceleration is started by applying a speed command to the drive system ("desired speed" in Figure 3.32). This speed command, which is proportional to the desired cruise speed, produces a large speed error signal, causing the frequency to rise quickly to the maximum slip frequency of 53 Hz as indicated in Figure 3.33. The LIM voltage control loop responds to the proportional voltage command, and produces the minimum primary voltage of 1330V. The thrust reaches the maximum level of 7500 lbs and accelerates the vehicle until the difference between the desired frequency and the frequency measurement proportional to LIM speed (the tachometer output) drops to the maximum allowable slip frequency (Δf_{max} in Equation (3.57)). At this point, the LIM operating frequency and voltage become constants, and a small additional acceleration brings the slip frequency down to where the LIM thrust is only sufficient to overcome vehicle drag (5000 lbs).

Acceleration of the vehicle is at a maximum at the start, since the vehicle drag is low. This gives the upward curvature of the frequency and voltage profiles. The initial jerk performance of the vehicle is a function of how fast the frequency is rising from zero. This is controlled by the gain constant in Equation (3.55), as discussed in the previous section. The firing angle of the rectifier and inverter and the dc current and voltages are illustrated in Figure 3.34 where the LIM thrust is included for reference.

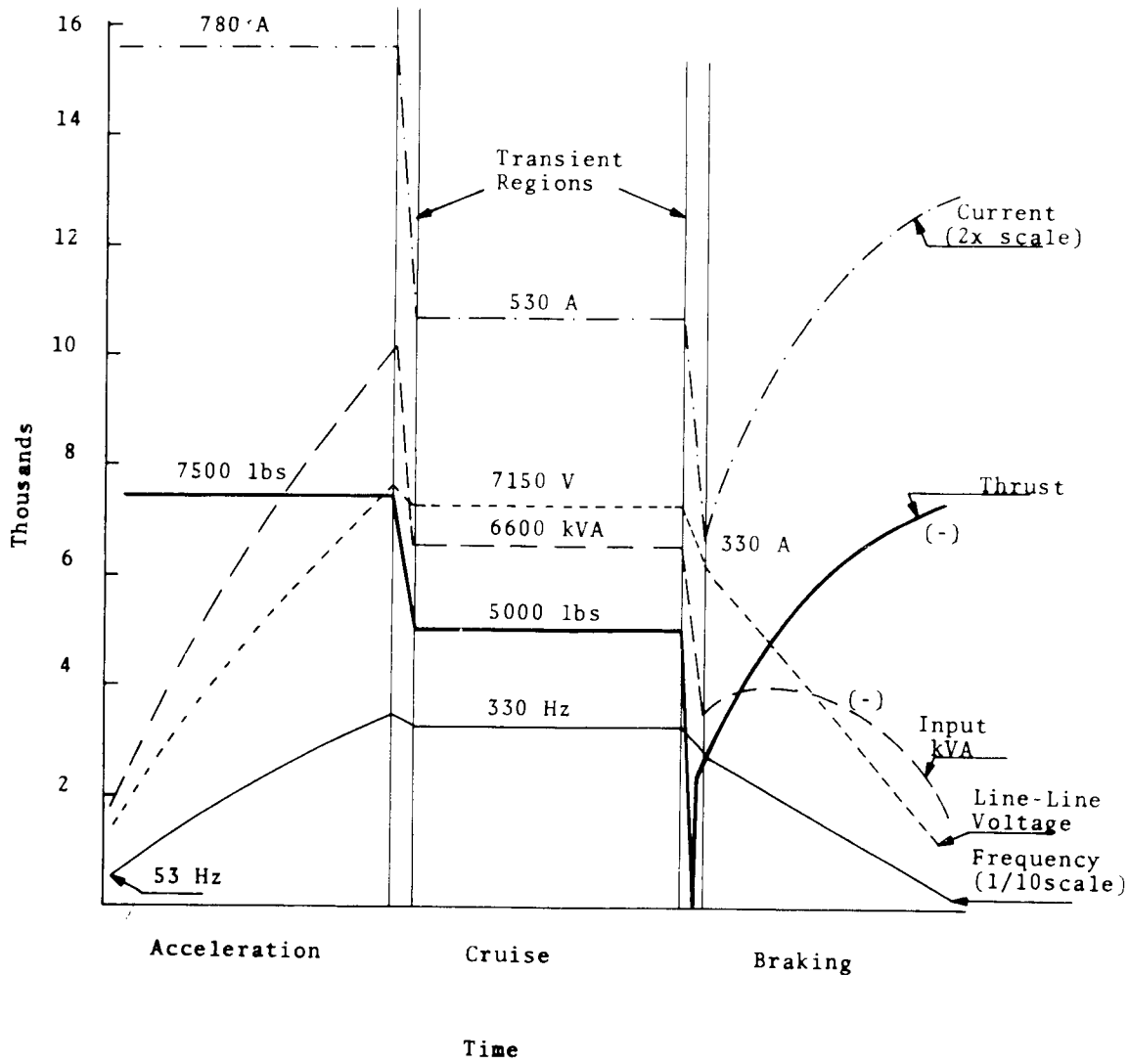

Figure 3.32 Operation Profile of the LIM

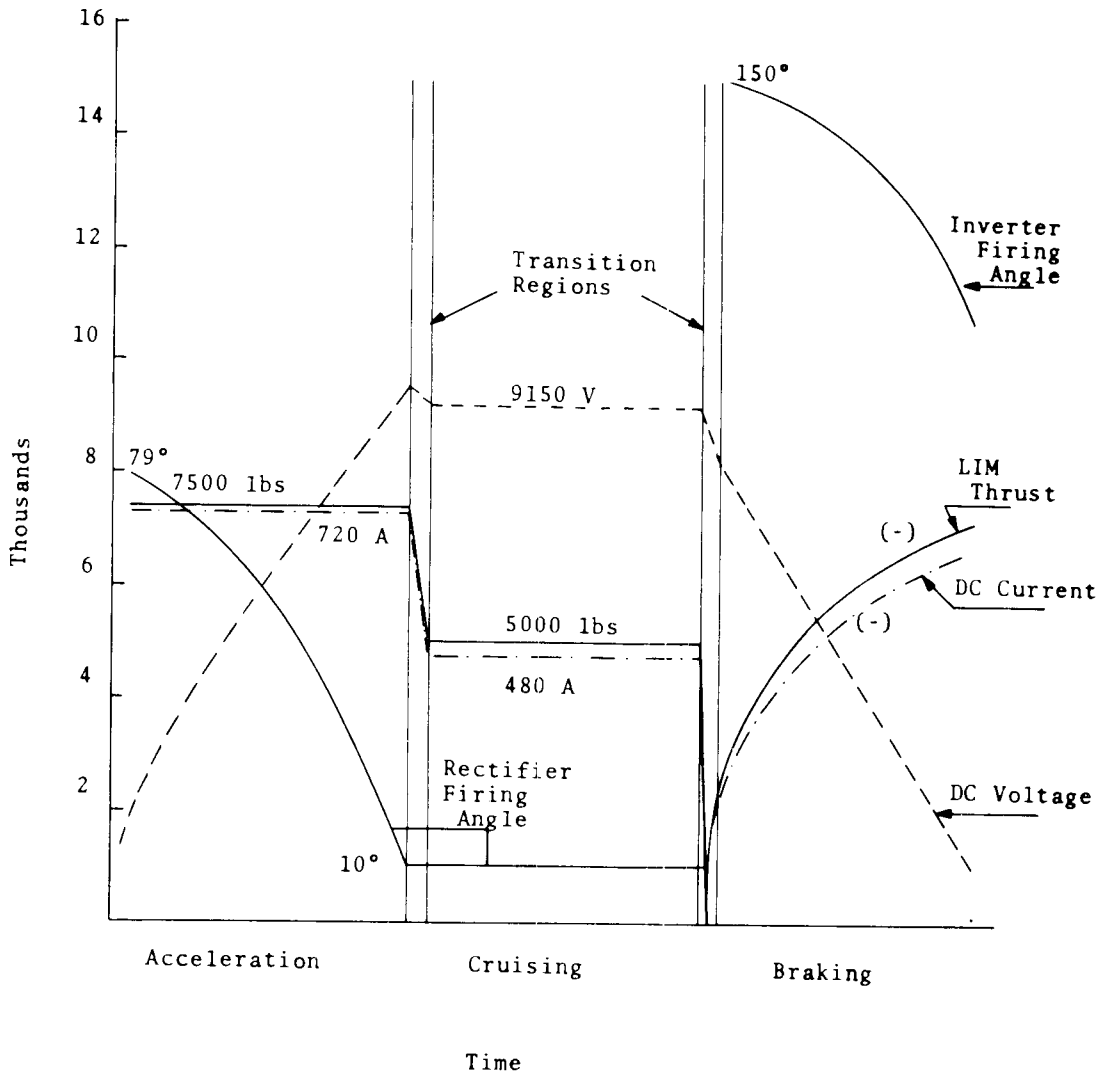

Figure 3.33 Operational Profile of the Rectifier-Forced Commutated Drive

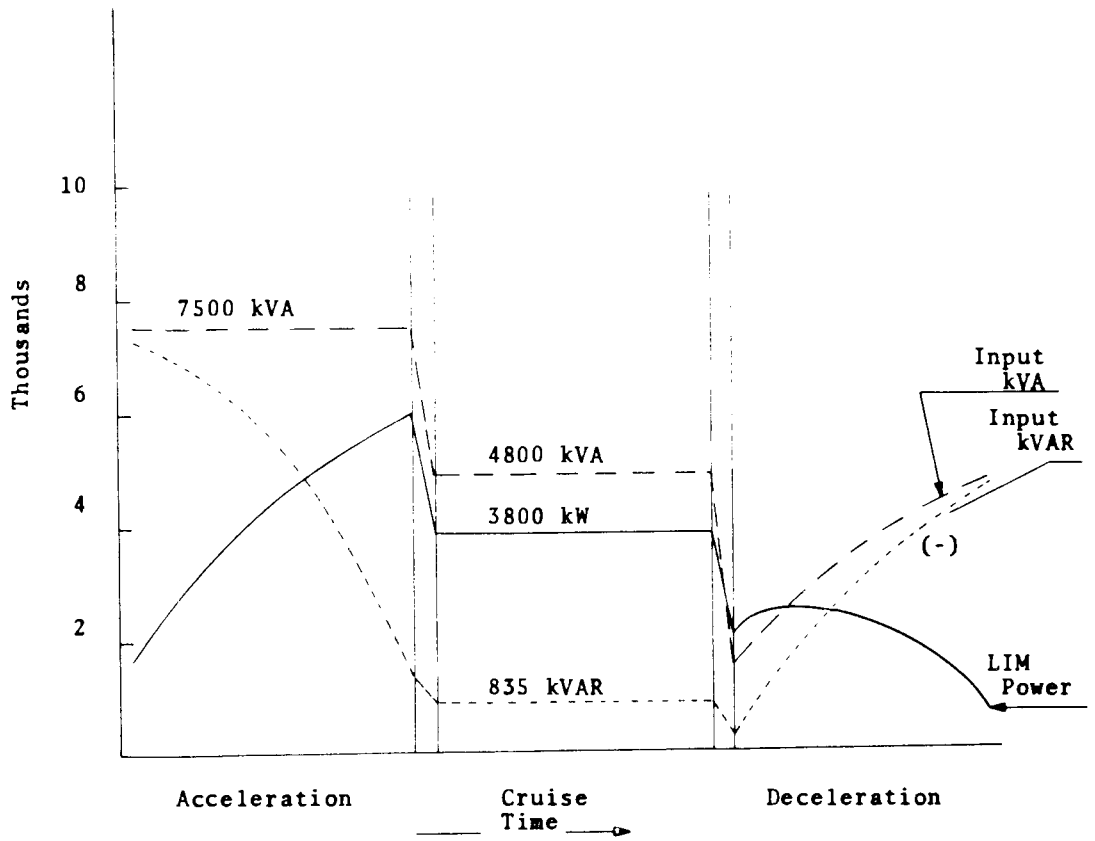

Figure 3.34 Drive System Input kVA and kVAR Profiles with the LIM Real Power as Comparison

3.5.5.2 Cruise - During cruise, the LIM operating frequency is held constant, corresponding to the desired speed command signal. Any variation in drag and/or grade results in a corresponding variation in the slip frequency, which produces the thrust variation required. A $\pm 25°$ variation in thrust command can be seen from Figure 3.1 to result in approximately $\pm 6\%$ speed variation.

3.5.5.3 Braking - The braking mode is started by a reduction (to zero if a complete stop is desired) of the desired speed. The resulting negative speed error produces a rapid drop in the operating frequency command signal from the thrust generator. At the lower frequency, a negative motor slip produces a negative thrust and a LIM voltage higher than that produced by the inverter. Current in the inverter now drops, and at the point where it is about to reverse, the line-commutated inverter is switched on. Power then starts to flow in the reverse direction.

At the start of the braking period, the drag on the vehicle is 5000 lbs and the negative thrust required for a full braking force becomes 2500 lbs, which is the starting point for the thrust curve as indicated in Figures 3.32 and 3.33. At lower speeds the drag quickly drops off and the braking thrust requirement increases.

3.5.5.4 Drive System Power Profiles - The LIM input power and the requirement to drive system kVA and reactive power during the three modes of operation are shown in Figure 3.34. Highlights of these plots are a high and constant input kVA level during the entire acceleration period starting off with almost all reactive power, and a drive efficiency of about 82% during cruise. During the braking period, the regenerated power is again highly reactive.

3.5.6 Summary

An adjustable-frequency drive system for a 5000 lb thrust, 300 mph LIM, utilizing a forced commutated inverter, has been analyzed for the purpose of obtaining the electrical characteristics

of the system parts, operating characteristics and weights. The list of favorable characteristics for this system is very significant. The more important of these are:

1. The drive system requires no rotating machines or mechanical switches (other than on-off contactors) and thus provides both thrust power and dynamic braking with all solid-state equipment.

2. The efficiency of the drive is about 82%, which becomes more significant in light of the fact that the auxiliary power requirements are low (there is no need for rotating machine field power or dc power supplies for LIM dynamic braking).

3. The system operates continually over the full required frequency range, eliminating the need for special controls and equipment.

4. No main power transformers need be carried on board the vehicle.

5. The control system is conceptually simple, and has no inherent saturation or sensitivity characteristics which would tend to affect system operating stability adversely.

6. The system weight compares favorably with other light-weight drive systems, and all parts and equipment are readily available. The cost of this system is low compared to drives requiring special designs such as light-weight rotating machines.

Some of the more important design difficulties and disadvantages are:

7. Both rectifiers and inverters must operate voltage and current levels making series-paralleling of devices mandatory. This requirement, which is common to all approaches using solid-state devices without an on-board

transformer, reduces the circuit efficiencies because of the need for voltage-dividing networks, and tends to reduce overall reliability.

8. A capacitor bank of very large energy storage capability must be provided for the forced commutated inverter. This must be made up of a large number of series-paralleled electrolytic capacitors. Additional losses are incurred in the voltage-dividing networks for these capacitors, and the reliability of the system is degraded.

9. The dc voltage at the forced commutated inverter input has the same polarity during reversed power flow. This characteristic makes it necessary to provide a line-commutated inverter in parallel with the rectifier circuit to regenerate the energy back to the three-phase lines. This requirement increases the total number of thyristor devices in the system.

The results are summarized in the following:

Weight - Two systems are considered: One using conventional air-cooled equipment, and another using the advanced design employing liquid cooling. The total drive system weight is estimated at 11,700 lbs and 7200 lbs respectively. The specific weights (relative to the real rated LIM power) are 3.08 and 1.90 lbs/kW respectively.

Design - The high voltage of operation for the rectifier-inverter circuits makes it necessary to develop reliable series connectable modules. Such design work is being carried out extensively today, and is considered well within the state-of-the-art. Special attention must also be given to both the series-connected commutating capacitors and the dc capacitor bank to obtain acceptable reliability characteristics.

Operation - The operation of the system is achieved by means of conventional feedback control loops, using a tachometer

for LIM speed sensing and a voltage detector for LIM power level sensing. The control system is conceptually simple, and should provide continuous control over the entire dynamic operating range, including dynamic braking. A special design effort may be required in the area of the rectifier and line-commutated inverter control logic to ensure smooth transient operation, especially during the thrust-to-braking changeover.

Solid-State Devices - Both thyristors and diodes are available (from manufacturers such as G.E. and National Electronics) which have ratings commensurate with the switching speed and current requirements of the system rectifier and inverters. The voltage stress per device should, however, not exceed a maximum of 700 to 1000V[5] (even if the device voltage rating exceeds this level by far). A series string of 10 to 15 must therefore be employed. This number may have to be increased considerably if voltage transient suppressors cannot be relied on to hold the voltage sufficiently low.

Reactive and Harmonic Power - The reactive power required by the LIM is delivered by the forced commutated inverter, and supplied by the large dc capacitor bank. Therefore, the reactive power results in a slightly higher power loss only. During acceleration and deceleration, however, the rectifier and line-commutated inverters operate with low dc voltages and a large amount of reactive power flows in the ac lines. The current drawn is essentially a square wave, and also introduces a large amount of harmonics in the power rail system. These are special problems which must be carefully considered during the design of the wayside power system.

Potential - This drive system is probably among the lightest of all systems for adjustable-frequency LIM power. Development of light-weight, liquid-cooled thyristor assemblies and

special capacitor banks for commutation and filtering may make this system desirable with respect to price, weight, and reliability.

3.6 SYNCHRONOUS INVERTER-CONDENSER POWER CONDITIONER

3.6.1 Introduction

A linear induction motor (LIM) drive system using a synchronously commutated inverter has been designed by the Garrett Corporation for the TACRV. The company has proven the feasibility of this drive system, using a scaled drive with a conventional induction motor to simulate the LIM[6]. The feasibility of operating at the required voltage and power level has been tentatively shown in a full-scale model of the phase-delayed rectifier. The advantages of this drive system are primarily light-weight, high efficiency, and minimum burden on the wayside system.

The purpose of this section is to explain the operation of the drive system, and to show how the basic parameters are calculated. The drive system for a 4000 hp, 300 mph LIM is used as an example.

3.6.2 System Description

3.6.2.1 System Block Diagram - A block diagram of the drive system is shown in Figure 3.35. The most significant feature of this system is the use of the rotary synchronous condenser to supply the reactive power of the LIM, to establish a sinusoidal inverter output voltage, and to both supply reactive power to and to commutate a line-commutated inverter which provides power to the LIM. Inverters of this type are being used for high-voltage dc power transmission[4]. The voltage and power output of the inverter is controlled by the dc voltage supplied by the rectifier. The field excitation of the condenser is controlled to maintain a desired power factor at the output of the inverter for all levels of LIM frequency and voltage.

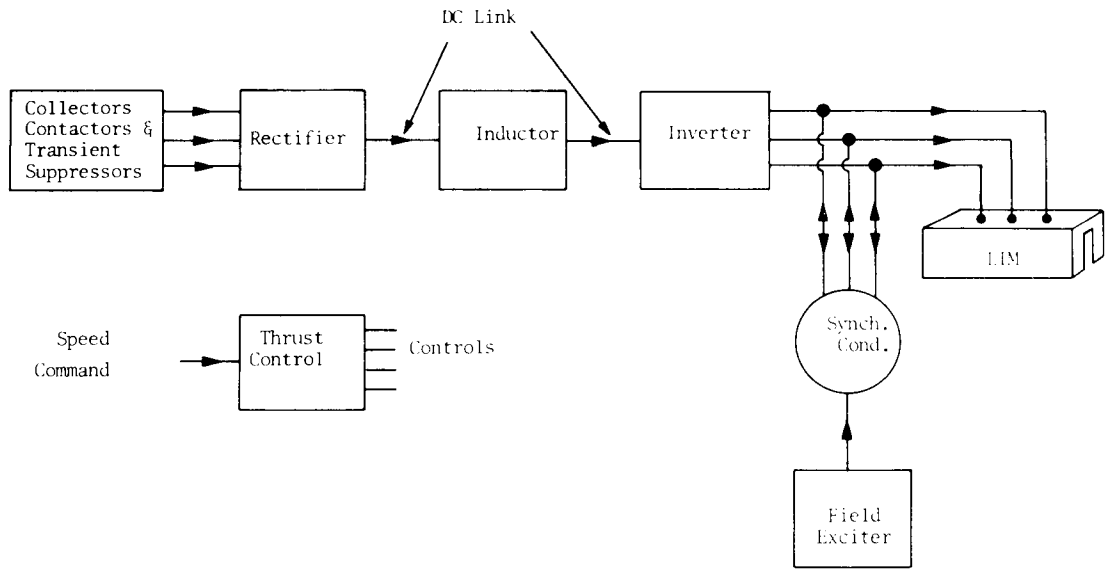

Figure 3.35 Phase Delay Rectifier-Line Commutated Inverter Drive System for LIM

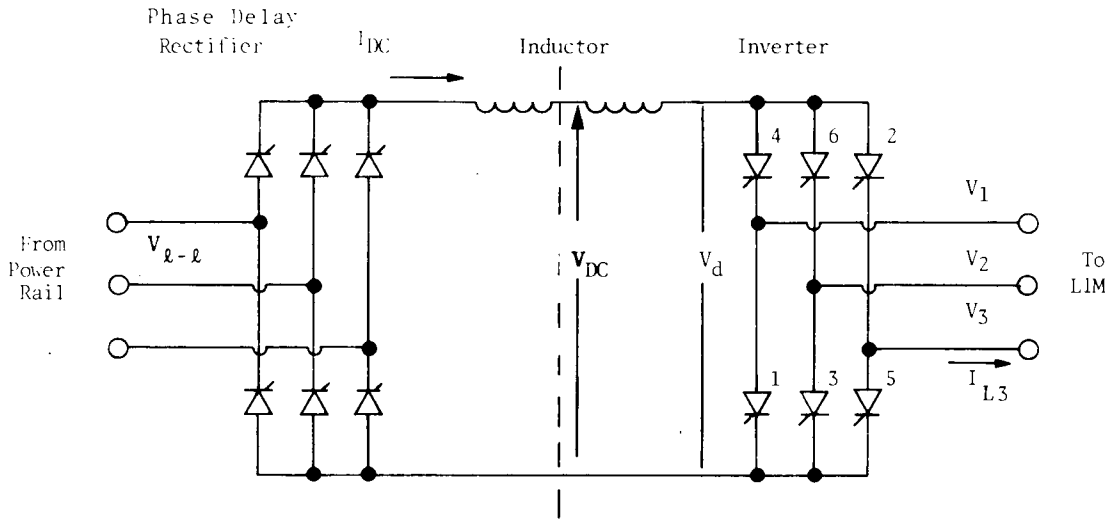

Figure 3.36 Simplified Circuit Diagram of PDR-INV Drive

3.6.2.2 Rectifier and Inverter Circuits - The rectifier and inverter circuits are the same, except for the polarity of the thyristors, as shown in the simplified diagram of Figure 3.36. An important feature of this circuit is that energy can be made to flow in either direction through the bridges by a variation of the dc levels, that is, the thyristor firing angles[3]. The symmetry line drawn in Figure 3.31 through the inductor, which is split in two for this purpose, is helpful in the understanding of this phenomenon.

The direction of the current I_{dc} is constant, while the voltages V_{dc} reverse polarity as the direction of energy flow reverses. This reversible characteristic of the rectifier-inverter drive system lends itself readily to regenerative braking of the LIM without any additional switchgear. Thus, during regenerative braking in this system, the inverter output frequency is reduced below the LIM synchronous frequency, so that the energy flow reverses, flowing from the LIM windings through the inverter-rectifier back to the ac lines. The requirements on the thrust and and brake control function is discussed in Section 3.6.4.

The principle of operation of the circuit of Figure 3.36, working as an inverter, is discussed in the literature[3,4]. However, an attempt is made here to clarify some practical characteristics of the inverter and specifically those which necessitate the use of power factor correction at the inverter (ac) output terminals. A set of waveforms is shown in Figure 3.37 for the purpose of this discussion and to facilitate subsequent design calculations. These waveforms, which are drawn for a firing angle delay of $\alpha = 150°$, use a firing sequence as indicated by the bottom line, where the numbers in each time block of 60 electrical degrees show which thyristors in the circuit (Figure 3.36) are being gated to the conducting state.

Several significant features are shown in the waveforms of Figure 3.37. First, it is indicated that the gating on of one thyristor, say thyristor No. 5, will short the phase voltages V_3 to V_2 because the current flow through thyristor No. 3 is continued

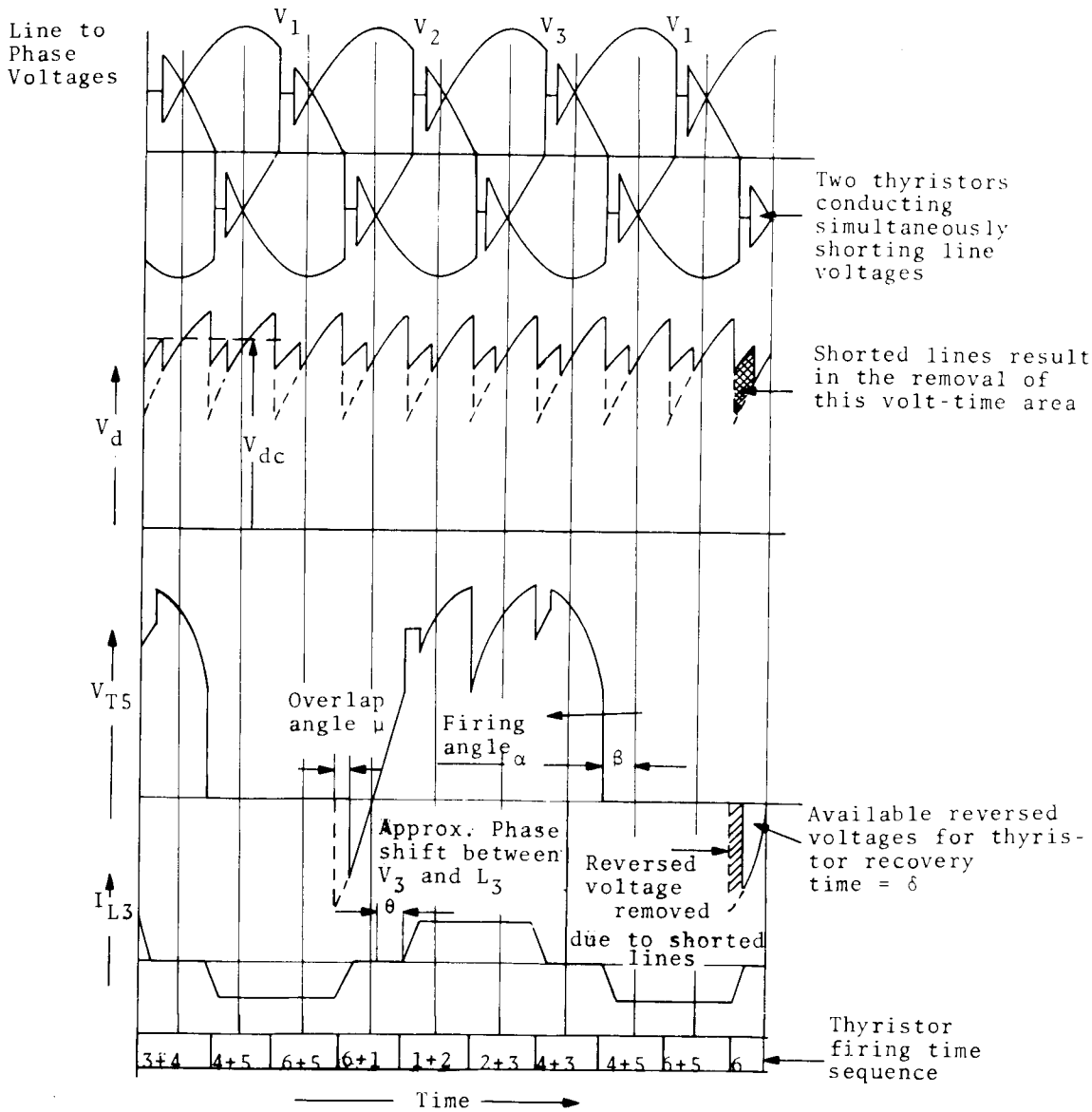

Figure 3.37 Line Commutated Inverter Waveforms Showing the effects of Circuit Inductance (and the Resulting Overlap Angle μ) in the Three-Phase Load

as a result of ac circuit (leakage) inductance. The two-phase voltages, therefore, must remain at the same level until the "inductive" current decays. The result of this thyristor overlap angle, defined as the angle u, can also be seen at the dc side of the inverter, as shown by the plot of V_d below the phase voltages. This is a second significant feature which indicates that a higher average voltage V_{dc} is required for a given level of ac output voltage when ac leakage inductance is present.

Perhaps the most significant consequence of ac leakage inductance is the reduction of the time the thyristors are biased in the reverse direction after a conduction period. This is shown by the plot of the thyristor voltage V_{T5}, where the reduction is shown by the shaded volt-time area. If no ac leakage is present, the total indicated negative area would be available for thyristor recovery. Thus, the firing angle α could be increased, resulting in a lower V_{dc} for a given ac output voltage, and consequently a higher inverter efficiency could be obtained. With the ac leakage inductance, the firing angle is limited to

$$\alpha \leq 180° - (\mu + \delta_{min}) \ . \tag{3.61}$$

One of the inverter output (line) currents I_{L3} is shown by the bottom waveform in Figure 3.37. It can be seen that the fundamental sinusoidal component of this waveform leads the phase voltage V_3, by an angle θ, as indicated. (It is significant that the value of θ is a function of both the firing angle α and the overlap angle u, as will be discussed in the next section.) If the ac load is an "infinite" bus, as is the case when the inverter is connected to a three-phase power line, any power factor may be absorbed, and the correct condition for the line-commutated inverter is present. However, if the ac load is an induction motor, the power factor can be leading only if a capacitive correction is used. The use of a synchronous condenser lends itself conveniently to the task of providing the power factor correction, since the latter can be adjusted over a wide range simply by control of the machine dc

excitation. Moreover, the synchronous condenser establishes a sinusoidal voltage which is desirable for the operation of the inverter, and an ac voltage level proportional to the operating frequency which is required for the LIM.

3.6.3 System Design

A power-conditioning system is designed in the following Sections for a 300 mph vehicle which utilizes a 5000 lb thrust LIM. Specifications which are developed for each major item of the system are compared with results already obtained by the Garrett Manufacturing Company, and reported in Reference 6.

3.6.3.1 Inverter and Synchronous Condenser - The operation of the inverter and the synchronous condenser are closely related, and their specifications must be determined from a combined circuit. A simplified equivalent circuit for one phase of the three-phase output circuit is shown in Figure 3.38a. The synchronous condenser, which is an unloaded synchronous motor, is represented by an internally generated voltage V_g and the synchronous reactance, x_s. The stator winding resistance is neglected for simplicity. The voltage V_g is a function of the synchronous speed (drive frequency) and the field excitation current. Assuming very small electrical and mechanical loss in the synchronous condenser, the voltage V_g is in phase with the terminal voltage V_L and the current I_s is purely reactive, leading the voltage $V_g - V_L$. This situation is illustrated in the phasor diagram of Figure 3.38b.

The LIM can be represented by a simple series connection of R_L and X_L, as shown, giving a lagging LIM current I_L. This current is split into an in-phase and a quadrature component in Figure 3.38b. The inverter is represented by a current source, I_{INV}, with one main in-phase component and a smaller quadrature component. (See discussion in the previous section.) For reliable inverter thyristor commutation, the current $(I_{INV})_q$ must be provided by the load it sees. From Figure 3.38b this condition is met when the condenser current

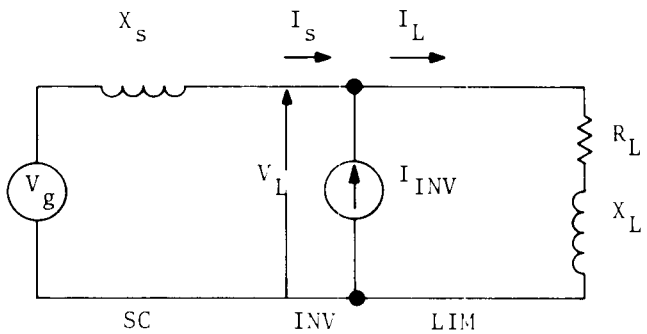

(a)

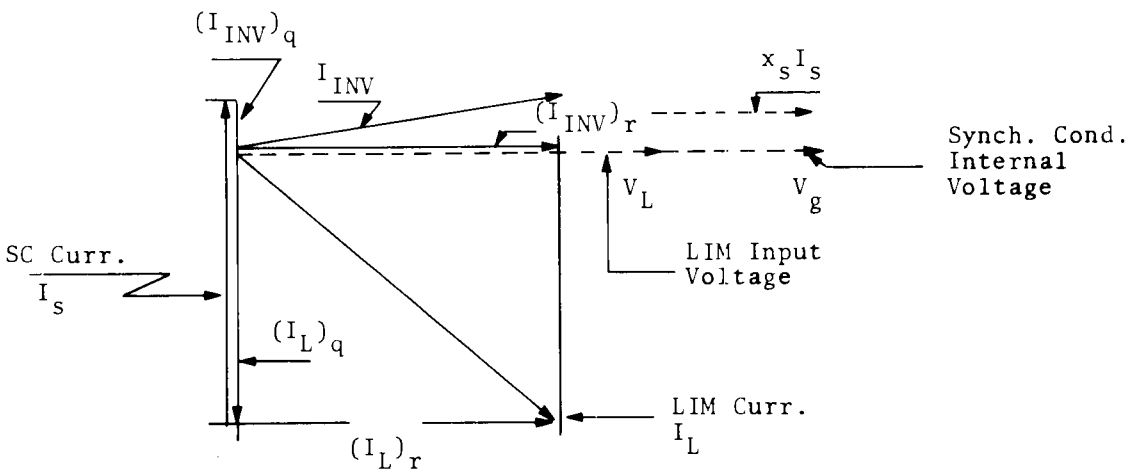

(b)

Figure 3.38 Simplified Equivalent Circuit of Drive System Output (a) and Associated Phasor Diagram (b)

$$I_s = (I_L)_q + (I_{INV})_q \ . \tag{3.62}$$

The inverter reactive component $(I_{INV})_q$ is a function of its overlap angle u and its firing angle α.

The power factor of the inverter for firing angles α approaching 180° can be expressed as follows

$$\cos\theta \simeq \frac{1}{2}(\cos\delta + \cos\beta) \ , \tag{3.63}$$

where, as seen in Figure 3.37,

$$\beta = 180° - \alpha$$

and

$$\delta = \beta - \mu \ .$$

The overlap angle μ is primarily due to the inductance, L_o, of the inverter output circuit, Since δ corresponds to the maximum time given for the thyristor to recover, it becomes necessary to find the minimum value of the angle β for safe operation. It can be shown[3] that

$$\cos\beta = \cos\delta - I_{dc}\frac{\sqrt{2}\omega L_o}{V_L} \ , \tag{3.64}$$

where I_{dc} is the dc link current. Motor base impedance is defined as the rated voltage divided by rated current, V_L/I_L, and the per-unit (pu) value of ωL_o is $X_o = \omega L_o x\ (I_L/V_L)$. Written in terms of pu values of reactance, X_o, Equation (3.64) then becomes

$$\cos\beta = \cos\delta - I_{dc}\sqrt{\frac{2}{3}}\frac{X_o}{I_L} \ . \tag{3.65}$$

The value of X_o is equal to the parallel combination of the LIM and synchronous condenser leakage reactances (neglecting the reactance of the cables). The LIM leakage reactance, which becomes the sum of the stator and rotor reactances, was estimated in Reference 6 to be

$$X_1 + X_2 = 0.144 + 0.053 = 0.197 \text{ pu} .$$

The leakage reactance of the synchronous condenser, commonly known as the "subtransient reactance", X''_d, is usually approximately 0.2 pu. Since the synchronous condenser and the LIM have approximately the same base impedance, the parallel reactance may be found from the pu values directly. Adding a 0.02 pu reactance for the cabling, the total reactance X_o becomes 0.12 pu.

For regular high-power thyristors, the specified commutating time is a few hundred microseconds, typically 150 to 300 μsec. At 330 Hz, a 300 μsec delay corresponds to an angle of

$$\delta = 3 \times 10^{-4} \times 330 \text{ Hz} \times 360° \simeq 36° .$$

Use of this value for δ and the 0.12 pu reactance in Equation (3.65) yields a firing angle of

$$\alpha = 136° ,$$

which results in a much too inefficient operation of the inverter. Therefore, it is necessary to use high-speed thyristors, such as the G.E. type C510, which has a maximum specified total commutation time of 15 μsec. Adding another 30 μsec for commutation safety, (a good safety margin is desirable, since β increases with the load) to the 15 μsec commutation time, we get $\delta = 5.35°$ and Equation (3.65) yields

$$\cos \beta = \cos 5.35° - \frac{480}{550^*} \times \sqrt{\frac{2}{3}} \times 0.12 ,$$

or

$$\beta = 24.5°$$

and

$$\alpha = 155.5° \text{ (max)}$$

and

$$\mu = 24.5 - \delta = 19.15°$$

It should be noted that the above overlap angle varies significantly during operation and the thyristor controls should therefore include logic, which limits the value of δ to a minimum for commutation safety.

Equation (3.63) now yields the following value for the inverter power factor

$$\cos \theta \simeq \frac{1}{2} (0.9956 + 0.910) = 0.953 .$$

From the phasor diagram of Figure 3.33, we see that $(I_{INV})_q = (I_L)_r \tan \theta$. Substituting this expression into Equation (3.62), the kVA rating for the synchronous condenser can be expressed as follows:

$$(VA)_{SC} = \sqrt{3} \; V_L \left[(I_L)_q + (I_L)_r \tan \theta \right] . \qquad (3.66)$$

* The 550A is an average of the LIM and synchronous condenser current ratings.

For the continuous thrust rating of 5000 lbs,

$$VA_{SC} = \sqrt{3} \times 7150\ (430 + 307 \times 0.328)$$

$$= \sqrt{3} \times 7150 \times 530 = 6.55 \text{ MVAR (continuous)}$$

For the overload thrust,

$$VA_{SC} = \sqrt{3} \times 7150 \times 771 = 9.55 \text{ MVAR}\ .$$

The specifications for the synchronous condenser are given in Table 3.18.

TABLE 3.18 SPECIFICATIONS FOR THE SYNCHRONOUS CONDENSER

		Cruising	Max. Power
1.	Voltage (line-line)	7150V	7150V
2.	Current (per phase)	530A	771A
3.	Reactive Power	6.55 MVAR	9.55 MVAR
4.	Field Power[1]	196 kW	286 kW
5.	Field Current[2]	392A	570A
6.	Efficiency (no field power)	88%	88%
7.	Frequency	330 Hz	330 Hz
8.	Speed[3]	6600 rpm	6600 rpm

Notes

1. Assume nominal field power is 3% of reactive power rating, and is supplied from static source, assume 500V nominal field voltage
2. Assume field current increases proportional to reactive power
3. Assume a six-pole machine

The maximum dc operating voltage for the inverter is determined by the LIM operating voltage at maximum frequency, the inverter firing angle and the inverter overlap angle as follows[3]

$$V_{dc} = \frac{3}{\sqrt{2}\pi} (\cos \beta + \cos \delta) V_L \; : \qquad (3.67)$$

Using $\beta = 24.5°$ and $\delta = 5.35°$, we get

$$V_{dc} = \frac{3}{\sqrt{2}\pi} (0.91 + 0.9956) 7150 = 9200V \; .$$

In addition to the 9200 volts, there is $\sim 0.5\%$ due to the thyristor forward drop.

The inverter input current is calculated from the LIM real power, P_L, as follows

$$I_{dc} \times V_{dc} = \frac{P_L}{\eta_{SC} \, \eta_{INV}} \quad ,$$

where the product of the synchronous condenser and inverter efficencies will be set at 87%.* Thus,

$$I_{dc} = \frac{3.82 \times 10^6}{9200 \times 0.87} = 477A \text{ (continuous)}$$

and

$$I_{dc} = \frac{5.7 \times 10^6}{9200 \times 0.87} = 712A \text{ (max. power)}$$

Specifications for the inverter are given in Table 3.19.

*Based on Garrett Mfg. Co. measurements showing 88% efficiency for the synchronous condenser and 1% loss in the inverter thyristors.

TABLE 3.19 SPECIFICATIONS FOR "LINE-COMMUTATED" INVERTER		
	Cruising	Max. Power
1. Dc Link Voltage	9200V	9200V
2. Current	477A	712A
3. MVA[1]	4.4 MVA	6.65 MVA
4. Commutation Time for Thyristors (δ)	45 μsec	45 μsec
5. Overlap Angle (μ)	19.5°	24.5°
6. Firing Angle Range	5° to 155.5°	

Note

1. Based on an 87% efficiency of the SC-INV combination as measured by Garrett Manufacturing Company

3.6.3.2 Dc Inductor - The inductor, IND in Figure 3.36, should be of sufficient value to yield an acceptable current ripple at the input to the inverter over the entire inverter frequency range. The highest ripple occurs at the lower frequency end, where also the rectifier output is low. The rectifier ripple voltage at low outputs appears as shown by the shaded waveform in Figure 3.39. The inductance, L, required for a given ripple current ΔI is found from the basic relation

$$\Delta I = \frac{1}{L} \int_{o}^{\Delta T} V_r dt \ , \tag{3.68}$$

where the ripple voltage, V_r, can be approximated as

$$V_r = (V_{\ell-n})_{peak} \left(1 - \frac{t}{\Delta T}\right) \sin \frac{\pi}{3} \tag{3.69}$$

and

$$\Delta T = \frac{1}{12f} \ . \tag{3.70}$$

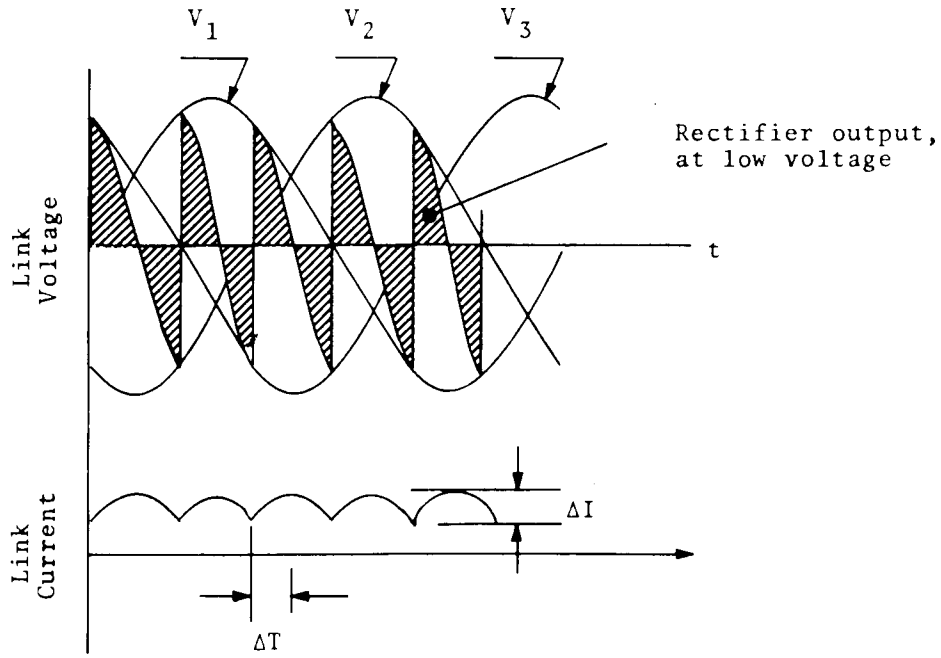

Figure 3.39 Rectifier Output Voltage and Link Current for Low Dc Link Voltage at Low Power and Speed

Use of the above equations yields the following expression for L

$$L = \frac{0.867(V_{\ell-n})\text{peak}}{12\ \Delta I f} \quad . \tag{3.71}$$

As an upper limit on I, we use a value of 20% of the required dc link current. As the lower frequency value, we use 12% of the upper 330 Hz. (The Garrett simulations indicate satisfactory operation down to approximately 13% of maximum frequency.) Thus,

$$L = \frac{1}{2}\ \frac{0.867 \times 4120 \times \sqrt{2}}{12 \times 0.2 \times 480 \times 0.12 \times 330} = 55 \text{ mH} \ .$$

Specifications for this inductor are given in Table 3.20.

TABLE 3.20 SPECIFICATIONS FOR THE DC INDUCTOR		
1.	Inductance	55 mH
2.	Current	480A (725A overload)
3.	Dc Voltage	9200V
4.	Ripple Voltage	10,000V peak-peak
5.	Dc Resistance[1]	0.2Ω

Note

1. Dc resistance is based on a 1% power loss in the inductor

3.6.3.3 Phase-Delay Rectifier - The rectifier output voltage can be expressed as follows[3]

$$V_{dc} = \frac{\sqrt{3}\ 2}{\pi} V_{\ell\ell} \cos \alpha - \frac{3x_\ell}{\pi} I_{dc} \tag{3.72}$$

where x_ℓ is the reactance of the feed lines. Equation (3.72) may be rewritten in terms of the per-unit line supply reactance, X_ℓ, by substitution of the expression $X_\ell = x_\ell \cdot I_\ell / V_{\ell\ell}$,

$$V_{dc} = \frac{3}{\pi} V_{\ell-\ell} (\sqrt{2} \cos \alpha - X_\ell) \tag{3.73}$$

where it is assumed that the rated ac line current $I_\ell \cong I_{dc}$. Assume a minimum of $\alpha = 10°$ and a supply system reactance of $X_\ell = 0.10$ pu, and solve Equation (3.73) for $V_{\ell\ell}$, which gives

$$V_{\ell\ell} = \frac{9200 \times \pi}{3(1.41 \times 0.985 - 0.1)} = 7500\text{V (rms)} .$$

In addition to this voltage, a thyristor drop of 0.5% must be added. Specifications for the rectifier are given in Table 3.21.

TABLE 3.21 SPECIFICATIONS FOR THE PDR		
	Cruising	Max. Power
1. Maximum Output Voltage	9000V	9000V
2. Maximum Output Current	480A	725A
3. Power Rail Voltage	7800V ±5% rms	
4. Assumed Feed Line Reactance	0.1 pu	
5. KW Rating[1]	4.55 MW	

Note

1. Based on a PDR-IND efficiency of 96%

3.6.3.4 Component Weights - The component weights are estimated for air-cooled and liquid-cooled equipment, and listed in Tables 3.22 and 3.23 respectively. The sources of the data and the reasoning for the final figures are given in the following sections.

3.6.3.4.1 Synchronous Condenser - For estimates of the condenser weight, we assume designs similar to air-cooled aircraft generators. Reference 5 gives specific weight curves for such 4000 Hz generators up to 600 kW. Extrapolation of these curves suggests a specific weight of approximately 1.6 lb/kVA. Using liquid cooling, the specific weight can be reduced substantially. Reports of work at the Garrett Corporation indicate that the specific weight can be reduced to about 0.6 lb/kVA, which is used here for the "advanced" design.

3.6.3.4.2 Rectifier and Inverter - For estimates of the weight of this requirement, we use Reference 5, where the weight of 6-diode, three-phase rectifiers is projected for 1973 as follows (forced-air-cooling): 500A, 500V: total of 100 lb., or 0.4 lb/kW. If liquid cooling is used, it is assumed that this figure can be halved to 0.2 lb/kW. The rectifier must have additional

transient suppression filters, which are estimated to add an additional 0.2 lb for the air-cooled and 0.1 lb for the liquid-cooled circuits.

TABLE 3.22 WEIGHT OF COMPONENTS FOR THE PDR-SYNCHRONOUS COMMUTATED INVERTER SYSTEM FOR A 4000 HP LIM USING CONVENTIONAL DESIGN

Component	Specification	Specific Weight	Weight
Synch. Cond.[1,2,3,4]	6.55×10^3 kVAR 7.15 kV, 330 Hz, 6600 rpm	(1.6 lb/kVAR) 2.8 lb/kW	10,500 lbs
Inverter[1,2]	10,000V, 480A 4×10^3 kW	0.4 lb/kW	1,600 lbs
Inductor[1,2,4]	55 mH, 480A, 9000V 0.2Ω	0.19 lb/kW	1,960 lbs
PDR[1,2]	10 kV, (20 kV range) 480A, 4.5×10^3 kW	0.6 lb/kW	2,700 lbs
Total		4.4 lb/kW	16,760 lbs

Notes

1. All components must have a 150% overload, 1 min. rating
2. Forced air cooling
3. Field supplies and controls not included
4. Specific weight relative to LIM power

TABLE 3.23 WEIGHT OF COMPONENTS FOR THE PDR-SYNCHRONOUS COMMUTATED INVERTER SYSTEM FOR A 4000 HP LIM USING ADVANCED DESIGN

Component	Specification	Specific Weight	Weight
Synch. Cond.[1,2,3,4]	6.50×10^3 kVAR 7.15 kV, 300 Hz, 6600 rpm	(0.7 lb/kVAR) 1.21 lb/kW	4600 lbs
Inverter[1,2]	10 kV, 480A 4×10^3 kW	0.2 lb/kW	800 lbs
Inductor[1,2,4]	55 mH, 480A, 9 kV 0.2Ω	0.19 lb/kW	980 lbs
PDR[1,2]	10 kV (20 kV range) 480A, 4.5×10^3 kW	0.3 lb/kW	1350 lbs
Total[4]		2.0 lb/kW	7730 lbs

Notes

1. All components must have a 150% overload
2. Liquid cooling
3. Field supplies not included
4. Specific weight relative to LIM power

3.6.3.4.3 Dc Inductor - For the dc inductor, we assume a design similar to the Garrett light-weight, liquid-cooled aluminum air core inductor. For this design, a specific weight is calculated of

$$w = \frac{\text{Weight}}{\text{Stored Energy}}$$

$$= \frac{410 \text{ lb}}{\frac{1}{2} \times 2.3 \times 10^{-2} \times 680^2} = 0.07 \text{ lb/Joule}$$

Thus, for the 55 mH inductor, we use

$$\text{Weight} = 0.07 \times \frac{1}{2} \times 5.5 \times 10^{-2} \times 715^2 \cong 980 \text{ lbs.}$$

With air cooling, we assume a weight of twice the 980 lbs., or 1960 lbs.

3.6.4 Control System Design

A block diagram of a control system for the LIM drive using the synchronously commutated inverter is shown in Figure 3.40. The control design is based on the following approach:

1. The LIM thrust is made proportional to the motor slip frequency* by controlling the motor primary voltage so that it becomes proportional to its frequency.
2. The frequency of the primary voltage is made proportional to a signal obtained by integrating the difference, or error, between a desired speed signal and a measurement of the LIM speed.
3. The frequency command signal is subjected to a function which limits the thrust when the above error is large.
4. The inverter output is controlled to the desired voltage level by a voltage feedback loop, and the load current demand is satisfied by a current feedback loop internal to the voltage loop.
5. The quadrature compensation current from the synchronous condenser is controlled by a separate loop which maintains the power factor of the inverter at a fixed level.
6. The inverter firing angle is held nearly constant for inversion during normal power flow and switched to full rectifier operation during regenerative braking.

* The slip frequency is the difference between the frequency of the LIM primary voltage and frequency analogous to the LIM speed of travel.

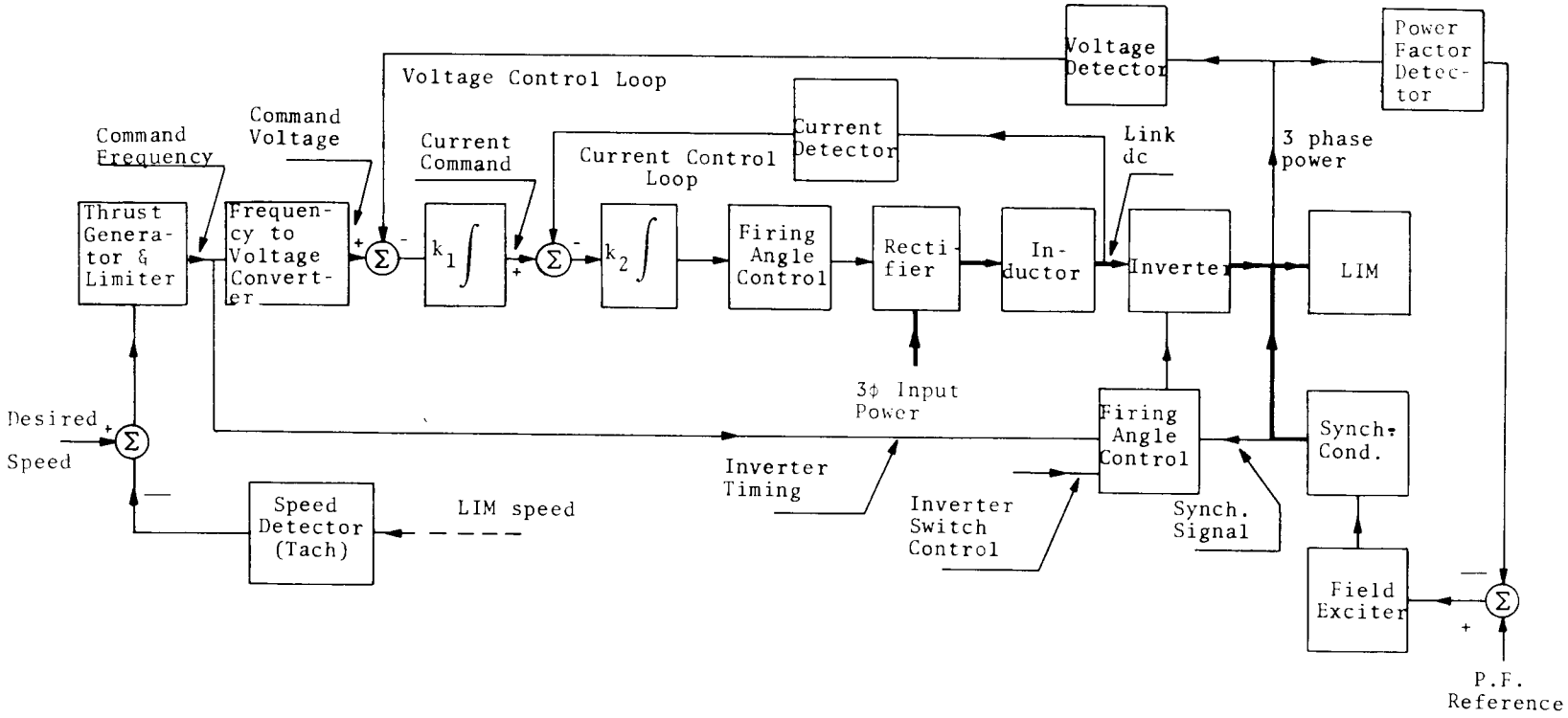

Figure 3.40 Block Diagram of System Controls

The block labeled "Thrust Generator and Limiter" in Figure 3.40 performs the functions of 2. and 3. above by producing a LIM operating frequency as follows:

$$f = k \int (\Delta f_c - \Delta f_m) dt \tag{3.74}$$

where the measured "slip" is

$$\Delta f_m = f - f_m \tag{3.75}$$

and the command slip is

$$\Delta f_c = \begin{cases} f_d - f_m \; ; & \leq \Delta f_{max} \\ \Delta f_{max} \; ; & > \Delta f_{max} \end{cases} . \tag{3.76}$$

The frequency f_m in the above equations is a signal proportional to the measured vehicle speed, and f_d the desired vehicle speed. When $\Delta f_c < \Delta f_{max}$, the frequency command becomes

$$f = k \int (f_d - f) dt \; , \tag{3.77}$$

which indicates that the frequency of operation remains fixed when the desired speed f_d is reached. This is the condition during vehicle cruise. (Vehicle speed is held relatively constant by the steep slope of the thrust-speed motor characteristics.)

During acceleration, when $f_d >> f_m$, the frequency f becomes

$$f = k \int [\Delta f_{max} - (f - \Delta f_m) dt] \; , \tag{3.78}$$

which indicates that after a transient (with a time constant 1/k) during which the frequency f rises, the steady-state condition is reached when

$$f = f_{max} + f_m \ , \tag{3.79}$$

which is the constant slip condition giving a near constant, and maximum, acceleration. During deceleration, when the power flow is reversed, the operation is the same except that a limit $-\Delta f_{max}$ is employed.

The voltage command signal for the LIM voltage control loop is generated in the system of Figure 3.40 by a constant voltage-to-frequency conversion. An integrator in the voltage control loop generates a current command signal for the current control loop. A second integrator in the current loop generates the rectifier delay angle command. The desired inverter output voltage is obtained in this manner as the required dc link current is provided.

During acceleration and cruise, the inverter operates with constant (or near constant) firing angle delay of approximately 150°. The inverter is switched to rectifier operation at the instant of time that deceleration commences by reducing the firing angle delay to approximately 10°, causing power flow to reverse. The inverter frequency is controlled by the timing of the thyristor firing sequence (see Figure 3.37) in step with the command frequency, and in near synchronism with the synchronous condenser output. The rotor of the condenser must follow any adjustment of the operating frequency. The frequency must be incremented, therefore, at a rate which is limited by the acceleration characteristics of this machine.

A "Power Factor Detector" is used in the control loop for the synchronous condenser. The output signal of this detector is compared to a PF reference signal, and the error is used to generate the correct synchronous condenser dc excitation. It should be noted that variations of the inverter output voltage will tend to vary the PF compensating current as seen in Figure 3.38. The inverter quadrature control loop must respond to these variations by increasing the synchronous condenser excitation as the inverter voltage goes up.

An illustration of the control system variables is shown in Figure 3.41 for the beginning of each of the three modes of operation. It is assumed in these sketches that the transient of the Thrust Generator and Limiter (see discussion after Equation (3.78)) is non-existent, and that the synchronous condenser is in synchronism from the start. It is shown in the illustrations how the error in the voltage control loop generates a current command signal, and how the difference between the actual link current and the former gives rise to a rectifier delay angle signal. The initial values of the delay angle at the start of acceleration and braking are both generated as a result of the current loop transients shown. (These transients are significantly smaller if a more gradual adjustment of the frequency is used. This is actually provided for by the Thrust Generator and Limiter.)

3.6.5 Operation

The manner in which the drive system operates over a cycle of acceleration, cruise, and braking is shown in Figures 3.42, 3.43, 3.44 and 3.45 and discussed in the following three sections. The LIM and system input power profiles are also discussed.

3.6.5.1 Acceleration - After an initial start-up period, which utilizes the inverter as a sequential switch, the system is transferred to a normal operating mode which is assumed to call for a full 7500 lb thrust per LIM, as indicated in Figure 3.42. The rectifier firing angle starts near 90° for a low output and decreases approximately as a cosine function with time as the synchronous condenser frequency and speed increase linearly. The dc link current is held essentially constant during this time.* The snychronous condenser current, the synchronous condenser excitation and dc link voltage during the acceleration period are shown in Figure 3.43.* When the desired LIM cruising frequency is reached, the rate of change of the frequency is controlled to zero,

*The transient indicated in Figure 3.41 is neglected here.

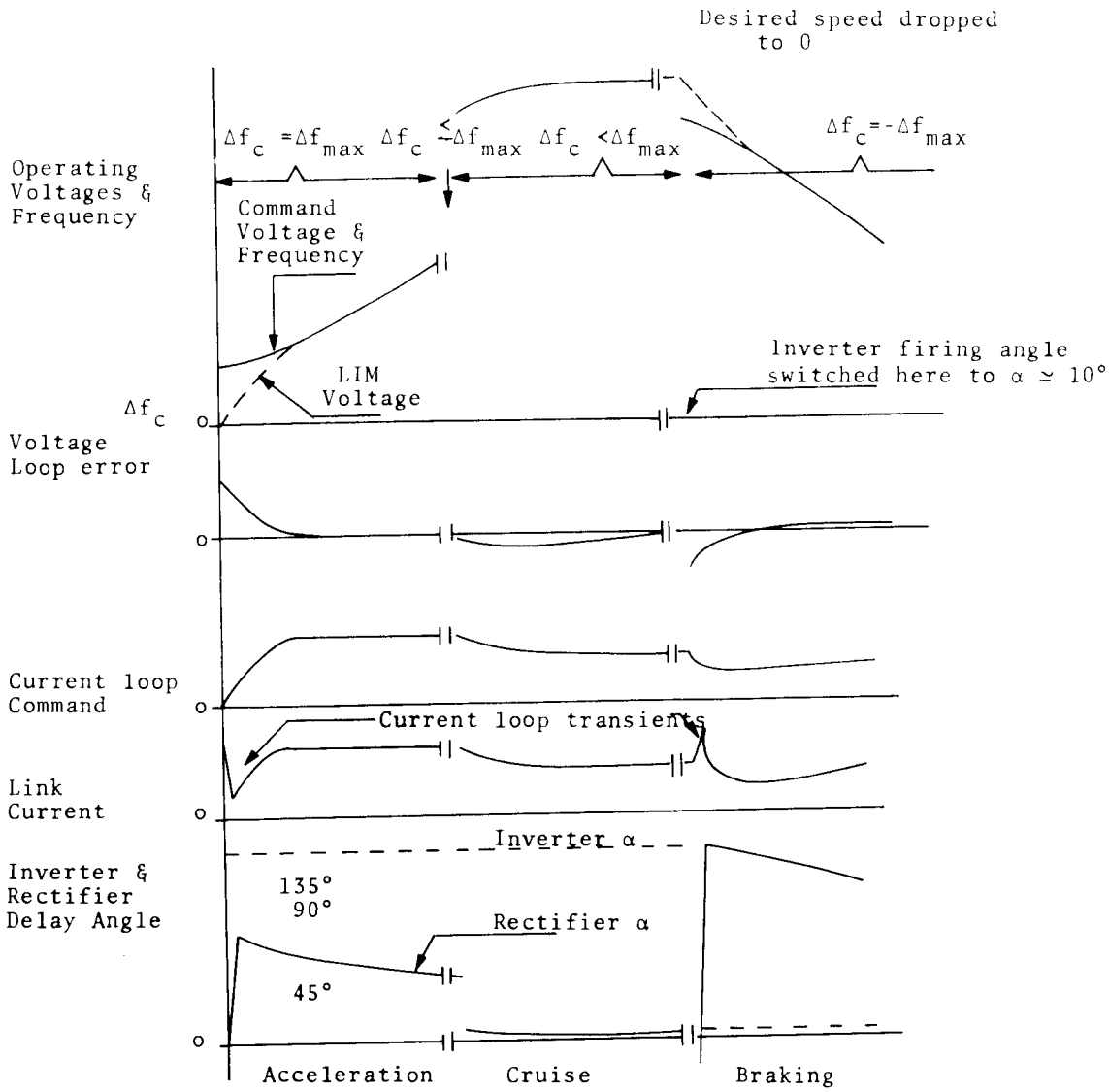

Figure 3.41 Sketch of System Control Variables for the Beginning of each of the Three Running Modes. The Synch-Condenser Startup and Thrust Generator Transients are Neglected

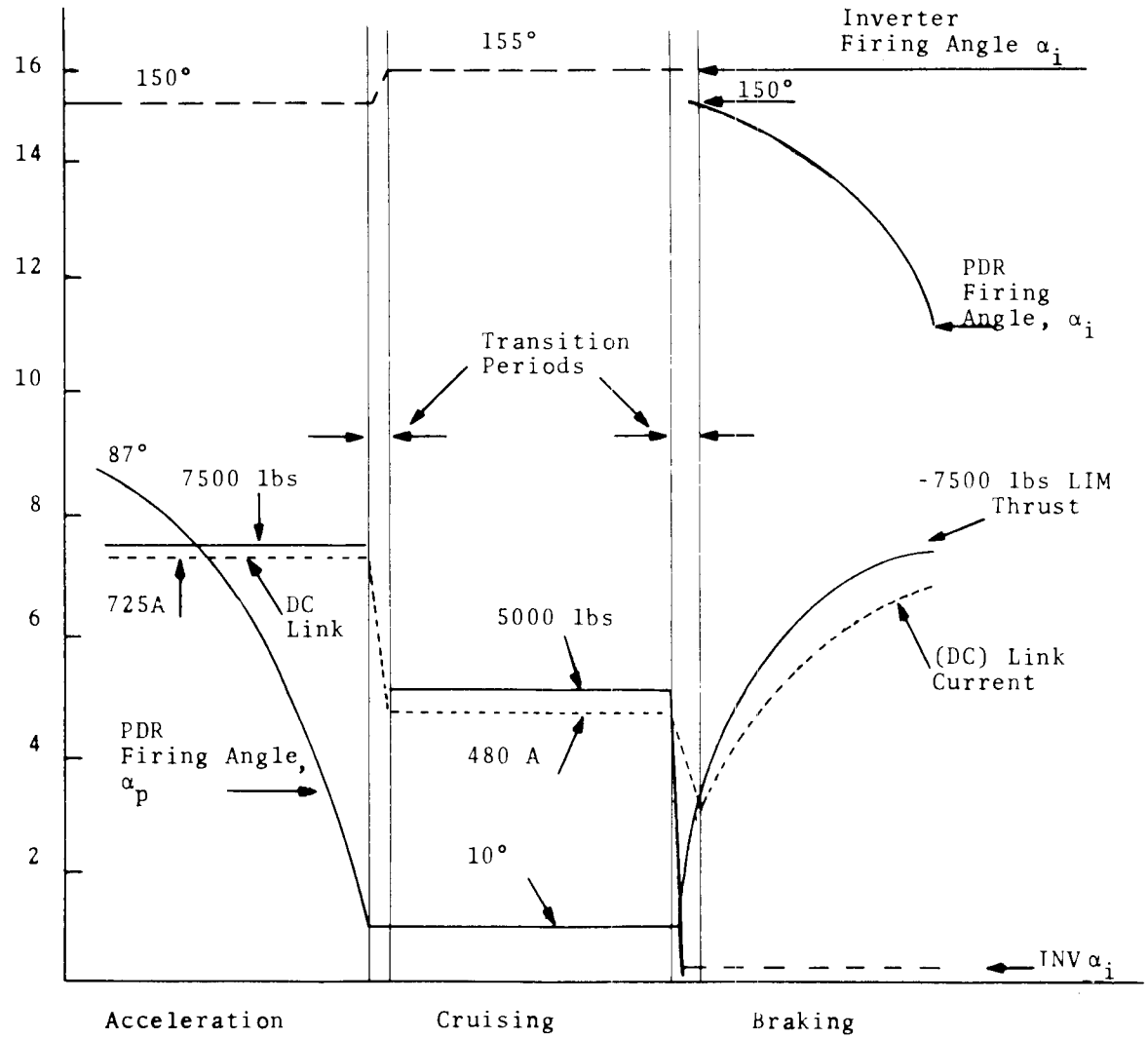

Figure 3.42 Operation of Drive System

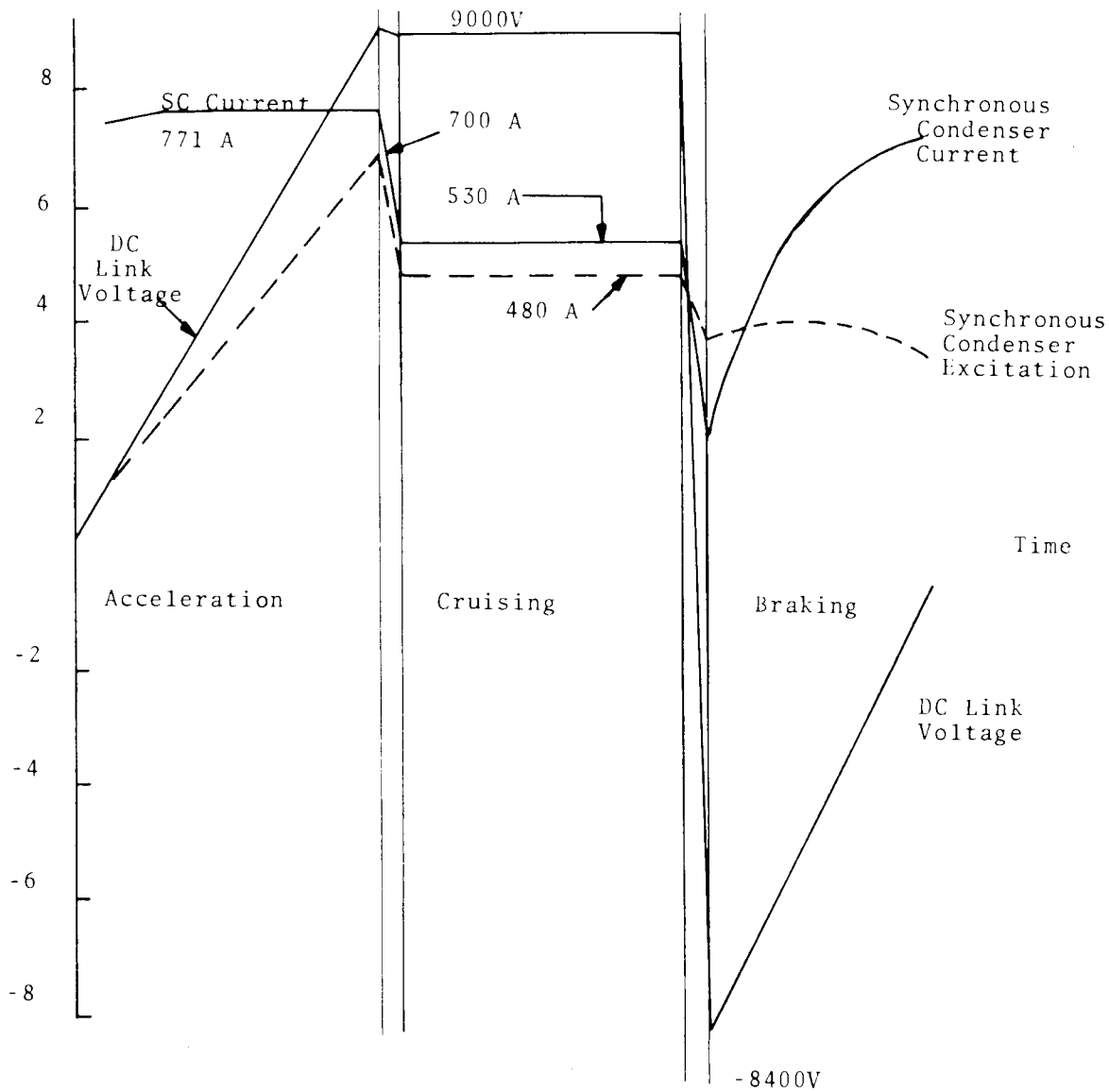

Figure 3.43 Operation of Drive System (Continued)

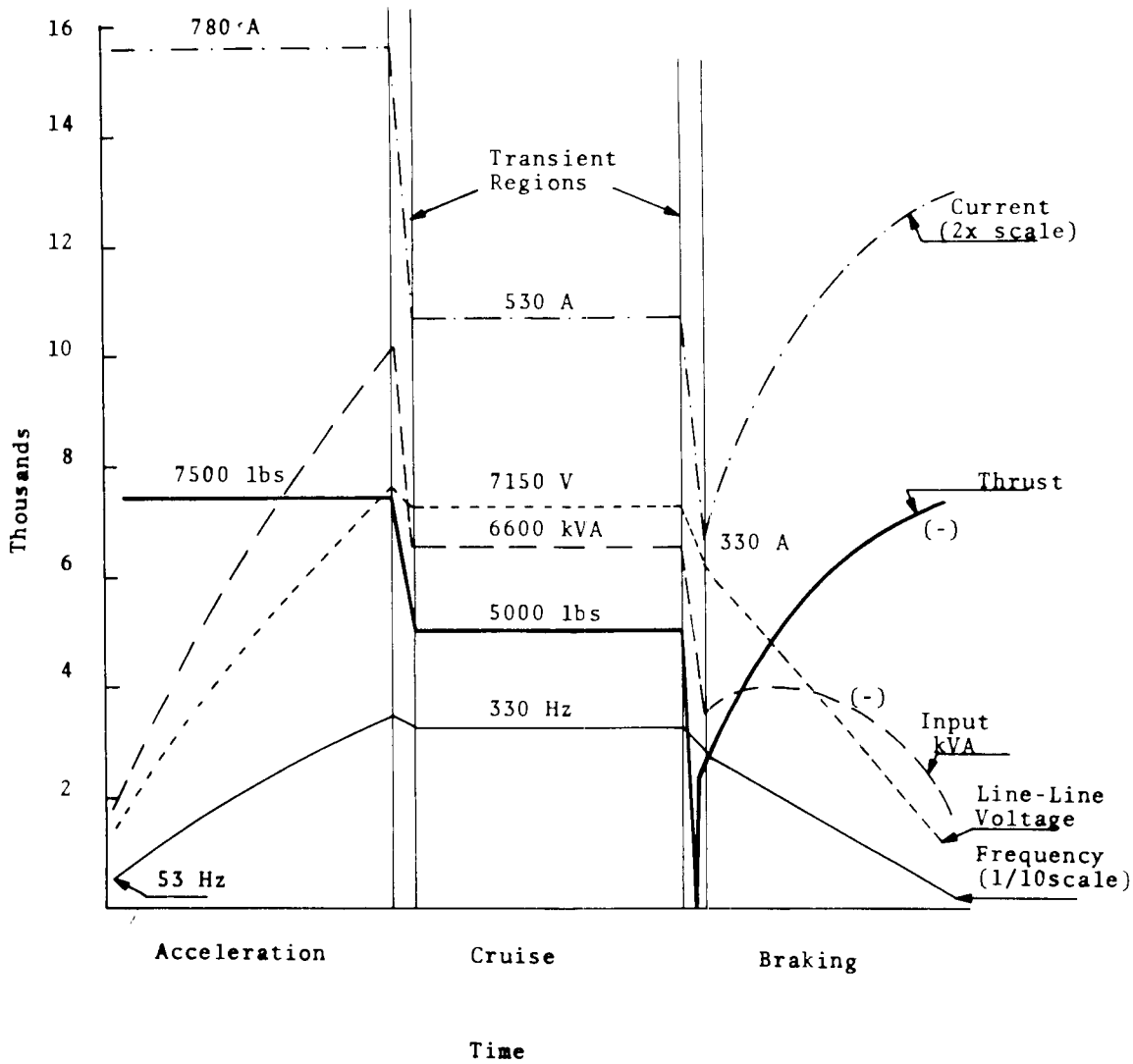

Figure 3.44 Operation Profile of the LIM

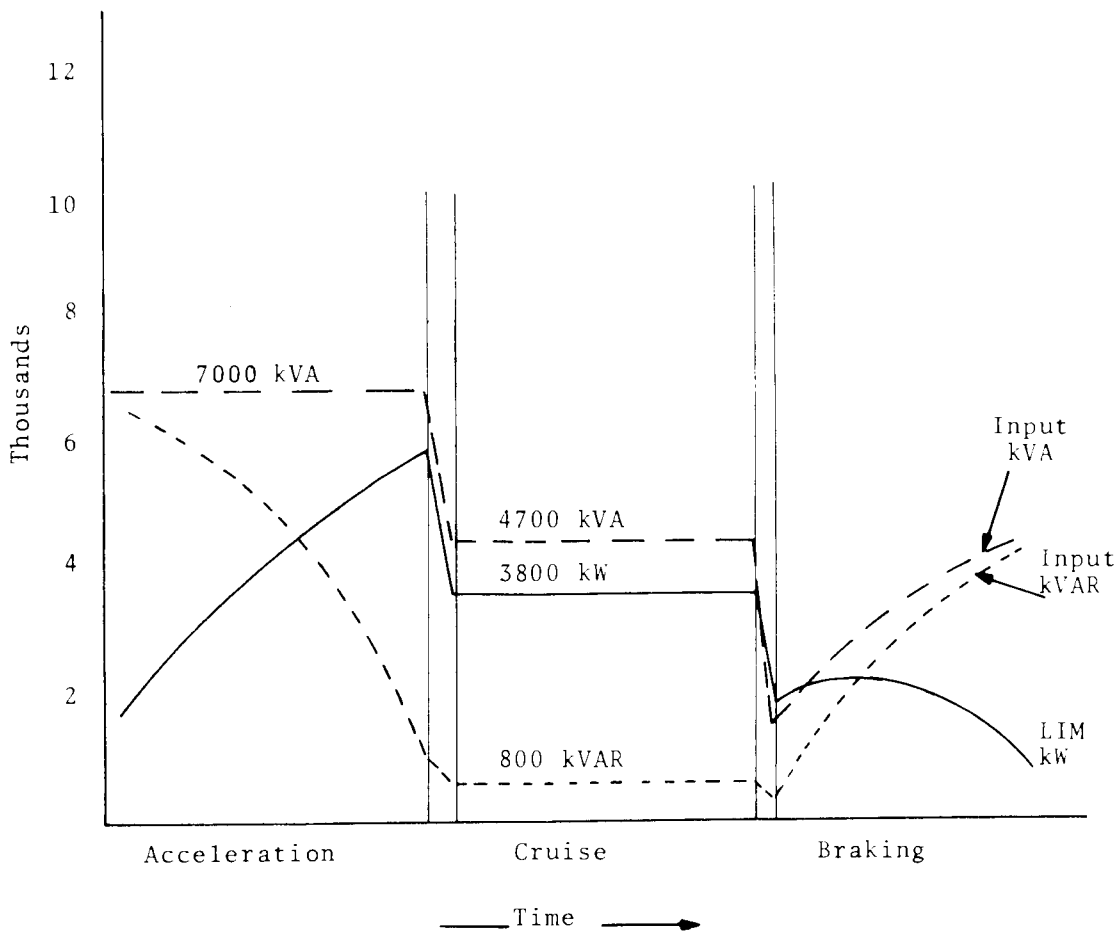

Figure 3.45 Drive System Input kVA and kVAR Profiles with the LIM Real Power as Comparison

and a transition period is entered during which the LIM slip falls to a level giving a thrust of 5000 lb (to overcome the vehicle drag only). The LIM current drops simultaneously, as does the required synchronous condenser kVAR and the feedback signal to the field exciter reduces the synchronous condenser excitation. The LIM performance profiles are shown in Figure 3.44.

3.6.5.2 Cruise - During cruise, the thrust requirement is essentially constant and all variables in the system remain unchanged. If there is an increase in the thrust requirements (high winds or grades), the LIM slip increases, and adjustments are automatically made via the feedback loop to set the synchronous condenser excitation at a new (and higher) level. A simultaneous decrease also takes place at the rectifier firing angle to hold the desired voltage level as the link current increases.

3.6.5.3 Braking - To initiate braking, the frequency and synchronous condenser speed are dropped in a transition period to yield a negative LIM slip. Because of the drag at the beginning of braking (assuming a 300 mph speed at this point), the required negative thrust is 7500 - 5000 or 2500 lb. This thrust is achieved at f = 288 Hz. During the transition period, when the link current is reduced and the inverter angle α_i is switched to near zero, the rectifier firing is controlled from 10° to approximately 150° for inverter operation. This yields a negative dc link voltage commensurate with regenerative energy transfer. For a constant deceleration, the negative thrust requirement increases and the load currents rises. The regenerative braking is effective only up to the point where the inverter frequency called for approaches a lower practical limit which is a function of the synchronous condenser characteristics (approximately 40 Hz). At this point, other braking systems must take over to stop the vehicle.

3.6.5.4 Drive System Power Profiles - The LIM input power and the requirement to drive system kVA and reactive power during the three modes of operation are shown in Figure 3.45. A high and

constant kVA level is required during the entire acceleration period. At the start the power factor is near zero (all reactive power). At the end of the accelerating period and during cruise the efficiency of the system is about 90% and the input PF is approaching unity. During the braking period the regenerated power gain becomes highly reactive as the vehicle slows down.

3.6.6 Summary

A rectifier-inverter drive system utilizing a synchronous condenser for power factor correction and for effective inverter commutation has been analyzed for the purpose of obtaining the electrical characteristics of the system components, operating characteristics, and weights.

The following characteristics of this drive system are regarded as clear advantages:

1. The synchronous condenser enables the use of a line-commutated inverter which yields very dependable thyristor commutation. A further advantage is that the power requirement from the inverter becomes only slightly higher than the real part of the LIM drive requirement. This reduces the solid-state parts requirement to a minimum.

2. The drive system has an overall peak efficiency of about 82% and offers regenerative braking down to speeds of about 13%. From this point on, other braking means must be used.

3. The system requires no main power transformer and only one high-speed rotating machine with no brushes or slip-rings. These characteristics all contribute to relatively low weight and high reliability.

The above advantages are counterbalanced by the following disadvantages:

4. The inverter cannot be operated normally at frequencies below which the synchronous condenser voltage is

insufficient and/or the frequency is too low for the indicator (IND) to be effective. (The Garrett simulations[6] have indicated that the low-frequency end for safe operation is about 13% of maximum frequency.) Thus, for operation below a minimum frequency a different operating mode must be used. This requirement may complicate the thrust control if very low-speed operation is required.

5. There is no transformer separation between the power rail and the on-board power system. This increases vulnerability to lightning and puts considerably more stringent requirements on the transient surge suppressors.

In addition to the aforementioned characteristics, there are some areas which seem to require further investigation and clarification. These include at least the following characteristics:

6. The control of LIM thrust can apparently be handled effectively by several feedback loops. The dynamics of the synchronous condenser, however, may give rise to an ineffective power factor cancellation during acceleration and tend to limit the available thrust during speed changes.

7. The stability of this drive system may deteriorate significantly during periods of a speed or thrust transient which bring one or more units to various levels of saturation. This is typical of controls that depend on feedback loops for proper operation.

The results are summarized in the following sections.

3.6.6.1 Weight - Two cooling systems are considered: forced air and liquid cooling. The total drive system weights are estimated to be 16,760 lbs and 7,730 lbs respectively, and specific weights per kW of LIM input power of 4.4 lb/kW and 2.0 lb/kW respectively.

3.6.6.2 Design - The design does not use conventional equipment, which in the case of the synchronous condenser is too heavy and for the rectifier-inverter system does not meet the levels of power and voltage required. All parts, therefore, require considerable development work but are within the state-of-the-art.

3.6.6.3 Operation - The operation of the system requires relatively precise controls of many variables, partially by means of feedback loops. This raises the question of control stability, which must be investigated both analytically and experimentally. It is expected, however, that good stability can be achieved. The operating efficiency is very high (about 82%) and regenerative braking is available over a wide speed range.

3.6.6.4 Solid-State Devices - The rectifier and inverter circuits must operate at the power collector voltage levels. To achieve safe operation in the 10 kV range, it is necessary to use a relatively large number of devices in series. This complicates the design, but such series connection has been proven feasible. Since there is no rectifier transformer at the input to the vehicle, the vulnerability to voltage transient surges is also high, and special surge suppression circuits must be used. The inverter thyristors must be of the high-speed type to operate at the 330 Hz LIM peak frequency. Such thyristors are readily available.

3.6.6.5 Reactive Power - All reactive power required by the LIM and the inverter is handled by the synchronous condenser. During acceleration and deceleration, the rectifier firing angle is such that a large amount of reactive power is drawn from the power collector. The current drawn is essentially a square wave, and will introduce a large amount of harmonics in the power rail system. These are special problems which must be carefully considered during the design of the wayside power system.

3.6.6.6 Potential - This drive system represents one of the lightest of all known systems for adjustable-frequency LIM power. Since the synchronous condenser is the single most heavy element in the system, development of light-weight power factor correcting units (not necessarily synchronous condensers) could improve the weight significantly.

4.0 CONCLUSIONS

4.1 SURVEY OF POWER CONDITIONERS

The technical survey identified the following systems as potential candidates for power conditioning of the linear induction motor in the variable frequency mode.

1. Synchronous inverter-condenser
2. Forced commutated inverter
3. Natural commutated inverter
4. Motor-alternator
5. Cycloconverter

The synchronous inverter-condenser power conditioner is the only system, to date, that has been applied at the power levels required for high speed tracked vehicles. Such a system has been developed for the tracked air cushion research vehicle (TACRV).

The forced commutated inverter power conditioner has been applied to industrial applications at moderate power levels only. The natural commutated inverter power conditioner presents a new technology with a potential for alleviating some major design problems in high performance power conversion at high power.

The motor alternator power conditioner represents the most conventional approach to control of the linear induction motor. However, this system requires several power conversion steps to convert 60 Hz conventional power into the required variable frequency power.

Cycloconverters of the natural commutated type require a high distribution frequency to be effective. The problem of distributing power along the wayside at frequencies of the order of 600 Hz are beyond the scope of this program. These problems must be investigated before serious consideration can be given to this approach to power conditioning for the LIM. The forced commutated

cycloconverter does not require high frequency power distribution, since this inverter can process variable frequency power above and below the commercial frequency of 60 Hz. This approach has not been developed to the extent that one can establish its feasibility. Further investigation of this approach appears to be warranted.

4.2 EVALUATION OF POWER CONDITIONERS

The primary criteria used in the evaluation of the selected power conditioners in the present study has been their specific weight. The specific weight of the motor alternator power conditioner is substantially heavier than all the other approaches considered. Therefore, the motor alternator power conditioner is not considered to be a candidate system for any further evaluations.

The weights of the solid state and hybrid power conditioning systems considered in this study have been shown to be nearly equivalent. However, the hybrid system, the synchronous inverter/synchronous condenser, appears to have reached its limit in specific weight, because its component parts have reached their technological limit. Significant reductions in specific weight are feasible for the solid state power conditioners as the technology of their component parts advances.

Further evaluations of the solid state power conditioners are recommended. These evaluations should concentrate on experimental activity with scale models so that performance criteria other than specific weight can be determined.

REFERENCES

1. "Thyristor Motors and Transistor Motors", Toshiba, to be published in IEEE Spectrum.
2. "Static Frequency Changer Supply System for Synchronous Motors Driving Tube Mills", J. Langer, Brown Boveri Review, March 1970.
3. Bedford, B.D. and Hoft, R.G., Principles of Inverter Circuits, John Wiley and Sons, New York, 1964.
4. Adamson, C. and Hingorani, N.G., "High Voltage Direct Current Power Transmission", Garraway Ltd., London, England, 1960.
5. "Electrical Systems Study Using Static Components", Volume II: Solid State Devices and Equipment, report by Westinghouse Electric Corporation No bs 94542, July 1968.
6. Development and Manufacture of a Linear Induction Motor Propulsion System for the Tracked Air Cushion Research Vehicle, by Airesearch Manufacturing Co. for DOT, April, 1971.

BIBLIOGRAPHY

BOOKS

1. Adamson, C. and Hingorani, N.G., "High Voltage Direct Current Power Transmission", Garraway Ltd., London, England, 1960.
2. Bedford, B.D. and Hoft, R.G., Principles of Inverter Circuits, John Wiley and Sons, New York, 1964.
3. Fink, Donald G. and Carroll, John M., Standard Handbook for Electrical Engineers, Tenth Edition, McGraw-Hill, New York, 1968.
4. Gentry, Finis E., et al, Semiconductor Controlled Rectifiers, Prentice Hall, Englewood Cliffs, 1964.
5. Gutzwiller, F.W., Silicon Controlled Rectifier Manual, Fourth Edition, General Electric Co., Syracuse, N.Y. 1967.
6. Kusko, Alexander, Solid State DC Motor Drives, The M.I.T. Press, Cambridge, 1969.
7. Laithwaite, E.R., Induction Machines for Special Purposes, Chemical Publishing Co., New York, 1966.
8. Millermaster, Ralph A., Harwood's Control of Electric Motors, Wiley Interscience, New York, 1970.
9. National Electrical Manufacturers Association, NEMA Standards Publication, Motors and Generators, Pub No. MG 1-1967, 1968.
10. Pelly, B.R., Thyristor Phase-Controlled Converters and Cycloconverters, Wiley-Interscience, New York, 1971.
11. Rice, L.R., SCR Designers Handbook, Second Edition, Westinghouse Electric Corp., Youngwood, Pa., 1970.
12. Schaefer, J., Rectifier Circuits: Theory and Design, John Wiley, New York, 1965.

Preceding page blank

REPORTS

1. "Development and Manufacture of a Linear Induction Motor Propulsion System for the Tracked Air Cushion Research Vehicle" Airesearch Manufacturing Co., for DOT, April 1971.
2. "Linear Induction Motor Research," Volumes I, II, & III, Airesearch Manufacturing Company, for DOT, October 1971.
3. "Specifications for Linear Induction Motor P/N 546230 Turbo Alternator Package P/N 545798, Auxiliary Power Unit P/N 928288, Manual Control P/N 44290", REPT 68-3400 (1), March 24, 1969, Garrett, Airesearch Manufacturing Company for DOT PB-183362.
4. "DC Motor Alternator Drive Systems for LIM", Report prepared under Contract No. DOT-TSC-203, A. Kusko, Inc. July 30, 1971.
5. "Dynamic Braking of Urban Tracked Air Cushion Vehicle", Report prepared under Contract DOT-TSC-203, A. Kusko, Inc. September 15, 1971.
6. "Space Power Systems Advanced Technology Conference", NASA SP-131, Lewis Research Center, August 23-24, 1966.
7. Greenblatt, S., et al, "Study and Development of High Efficiency Inductor Motor Amplifier System", NASA Contractor Report, March 1968.
8. Parsons Brinckerhoff et al, "Rapid Transit Propulsion Systems", Technical Report Number 4, San Francisco Bay Area Rapid Transit District Demonstration Project, Volumes I and II, September 1968.
9. Raposa, Frank L., "Power Conditioning for High-Speed Tracked Vehicles", Interim Technical Report, DOT-TSC-FRA-71-1A, Transportation Systems Center, Cambridge, Mass., February 1971.
10. Reimers, E., "Experimental and Projected Performance Data for the National Electronic Company 470 Ampere RMS/2000 Volt, High-Speed Thyristor", Report 1966, U.S. Army Mobility Equipment Research and Development Center, Fort Belvoir, Va., October 1969.

11. Scharz, F.C., A Series Capacitor Inverter-Converter for Multi-kilowatt Power Conversion NASA TR R-336, April 1970.

12. "High Speed Ground Transportation Systems Engineering Study, High Speed Rail Systems", TRW Systems, for DOT, February 1970 PB # 192 506.

13. "High Speed Ground Transportation Systems Engineering Study, Tube Vehicle Systems", TRW Systems, for DOT, May 1970 PB # 195 875.

14. "High Speed Ground Transportation Systems Engineering Study, Tracked Air Cushion Vehicle Systems", TRW Systems, For DOT May 1970 PB # 195 030.

15. Wawzonek, John J. and Rosenfeld, Eric, "A High Efficiency Induction Motor Amplifier System", Final Technical Report, NAS 12-2000, October 1970 (Unpublished).

16. "Electrical Systems Study Using Static Components", Volume II: Solid State Devices and Equipment, Report by Westinghouse Electric Corporation No. bs 94542, July 1968.

17. "Electric Power Systems for High Speed Ground Transportation", By Westinghouse Electric Corporation, for DOT, PB # 186 232, August 1969.

TECHNICAL ARTICLES

1. Chirgwin, K.M., Linear Induction Motor Research in the U.S.A., presented at "High-Speeds" Symposium, I.R.C.A.-U.I.C., April 1968.
2. Chowhuri, P., "A Study on the Impulse Breakdown Phenomena of Silicon Power Rectifiers", IEEE-IGA Conference Record, Sixth Annual Meeting, October 18, 1971, pp. 791-798.
3. Davies, R.L., "High Frequency Capabilities of a New Thyristor", 4th Intersociety Energy Conversion Engineering Conference, Washington, D.C., 1969.
4. Laithwaite, E.R., et al., "Application of Linear Induction Motors to High-Speed Transport", Proceedings of I.E.E., Vol. 116, No. 5, May 1969.
5. Laithwaite, E.R., et al., "Linear Motion Electrical Machines", Proceedings of IEEE, Vol. 58, No. 4, April 1970.
6. Langer, J., "Static Change Supply Systems for Synchronous Motors Driving Tube Mills", Brown Boveri Review, March 1970.
7. Larsen, Paul J., "Electronics in Advanced High Speed Ground Transportation", Proceedings of Electronic and Aerospace Systems Convention, Washington, D.C., 1969.
8. Raposa, Frank L., "Application of Power Conditioning to High Voltage DC Electric Power Systems for Flight Vehicles", Proceedings of the National Aerospace Electronics Conference, Dayton, Ohio, 1971.
9. Slabiak, W., et al., "Brushless Synchronous Propulsion Motor", Society of Automotive Engineers, paper 680455, May 1968.
10. Toshiba, "Thyristor Motors and Transistor Motors", to be published in IEEE Spectrum.

11. Wawzonek, John J., "Series Commutation for Variable Frequency Thyristor Inverters", Proceedings Twenty-fourth Annual Power Sources Conference, May 1970.

12. Wawzonek, John J., "A Naturally Commutated Thyristor Inverter for Ac Motor Drivers", Proceedings National Aerospace Electronics Conference, Dayton, Ohio, 1971.

13. Raposa, Frank L., "Power Conditioning for High Speed Ground Transportation Vehicles", IEEE Power Processing and Electronics Specialist Conference/25th Power Sources Symposium, Atlantic City, N.J., May 23, 1972.

APPENDIX A

DESCRIPTION OF TURBOALTERNATOR POWER CONDITIONER LIM RESEARCH VEHICLE

OPEN-LOOP BRAYTON CYCLE TURBOALTERNATOR FOR THE LIM RESEARCH VEHICLE

The turboalternator supplies variable frequency, variable voltage, 3 phase power to the linear induction motor (LIM) through an alternator with a separately excited rotor field. The turbine is a free spool gas turbine designated T64-GE-10, built by General Electric, originally for use in a helicopter. A gearbox between the turbine and LIM alternator reduces maximum alternator speed to 5200 rpm. An auxiliary power unit designated APU built by Garrett Corporation consists of a single shaft turbine and two alternators which supply 60-Hz and 400-Hz electrical power for alternator field excitation and for auxiliary power. In addition, this APU supplies the primary turbine with compressed air for starting. Total weight of the turboalternator package is 8,900 lb. Figure A-1 is a simplified block diagram of the Turbine system.

The primary gas turbine is rated at 2800 horsepower (2250 @ 6,000 feet above sea level on a "hot" day) and weighs 750 pounds. Fuel used is JP-4 or JP-5. The turbine free spool is mounted on a separate shaft from the compressor and gas generator and can be regulated in speed from 9 to 13,600 rpm, by controlling the fuel flow into the combustor. Because the turbine was designed for a helicopter, power is picked off at the inlet end of the turbine through a power shaft concentric with the compressor/gas generator shaft. This imposes limits on acceleration and deceleration time because the bearings between the shafts are limited to 8000 rpm continuous operation while idle speed of the compressor shaft is 12000 rpm. This limitation could be avoided in future vehicles by choosing a free spool turbine without concentric shafts.

TURBINE NOISE LEVEL

The noise level of either turbine unmuffled, is unacceptable in a residential community. Figure A-2 indicates that with 4" of fiber-glass lining and a 5" concrete wall, the main turbine noise level at full power still exceeds the maximum allowable in a residential community. Further muffling was not required however, since the turbine was being tested only at reduced speeds in a non residential area.

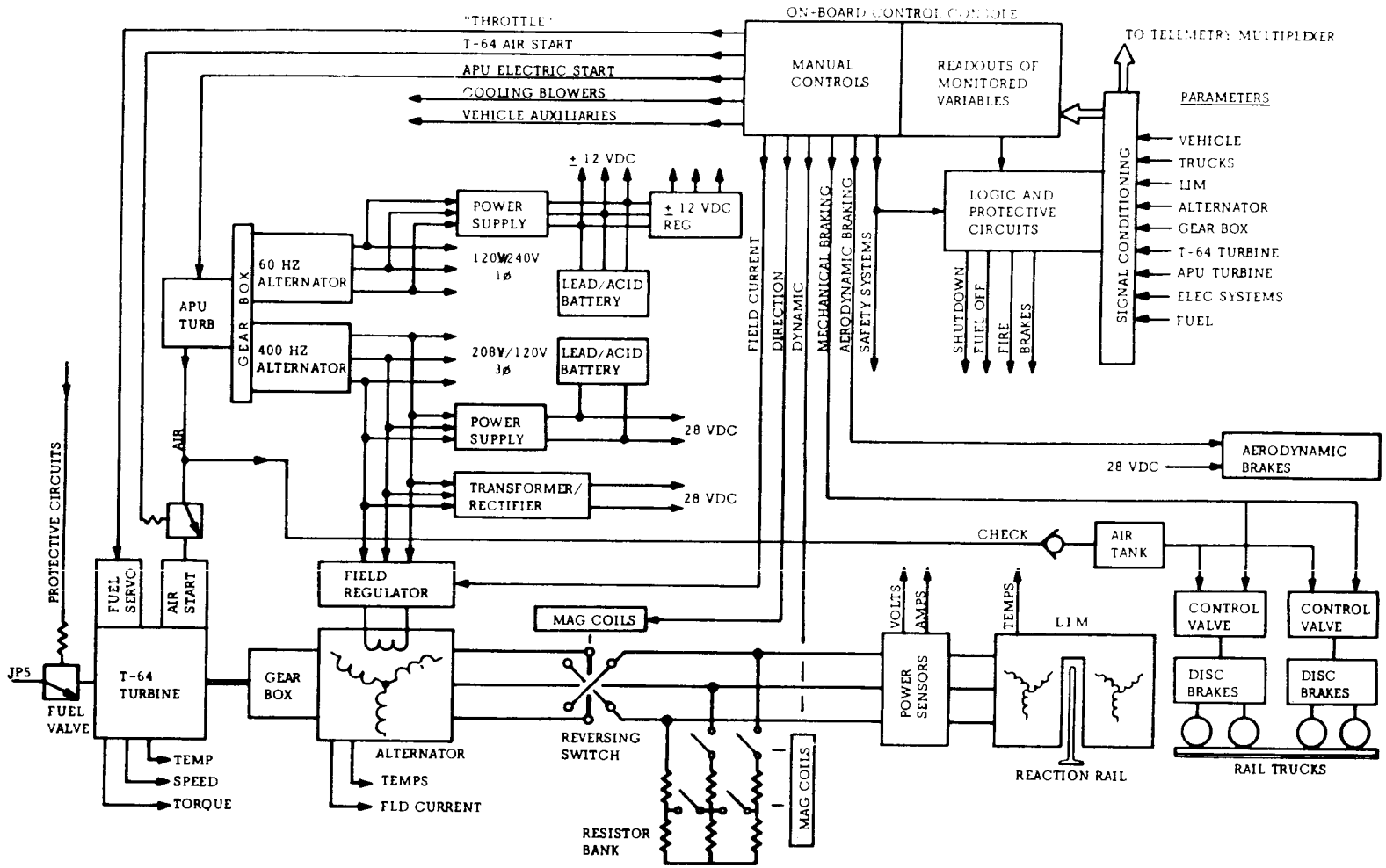

Figure A.1 Simplified Control System Diagram

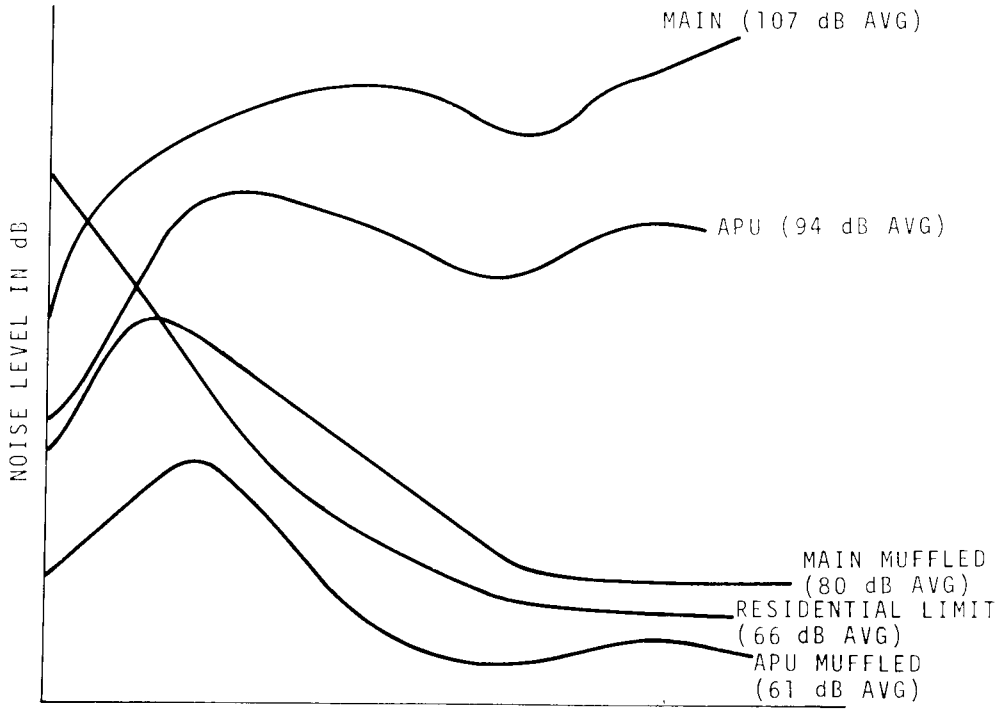

Figure A.2 Noise Level of Main and APU Turbines Unmuffled and Muffled

LIM ALTERNATOR

The alternator is a 4 pole separately excited machine delivering 3000 KVA (unity to 0.6 power factor) at 5200 rpm. By itself, the alternator weighs 3300 lbs. exclusive of field supply, cooling system, etc. Overall size is 37.5" DIA x 47.5" length. Output is 600/1040 volts, 3 phase, 1667 amps and 173.3 cps at 5200 rpm. 7000 cfm of cooling air is needed. The cooling fan requires 210 Vdc at 161 amps. Excitation for the machine is supplied by a solid state full wave rectifier using six thyristors. Its input is 3 phase, 208 volts, 400 Hz, and its output is zero to 280 Vdc at 165 amps continuous. Prime power for the field is derived from the APU. The field supply weighs 200 lbs.

The desired alternator output is constant volts/cycle for the LIM. This keeps the LIM operating near its maximum torque point. Although a constant field excitation would satisfy the alternator output requirement, if voltage regulation of the machine was very good, the increased size and weight needed to achieve this intrinsic regulation would be eliminated by providing field regulation. In this system, field regulation is used.

GEAR BOX

The gear box has a 2.613:1 reduction ratio, giving an alternator speed range of 0-5200 rpm. The output of the turbine is torque limited to 1075 ft-lb. by limitations on gear box components. Gear box weight is 230 lb.

AUXILIARY POWER UNIT

The APU is a Garrett Corporation turbine which runs at constant speed to power two alternators and to supply bleed air to the main turbine for starting. The APU weighs 900 lb. and burns JP-4 or JP-5 fuel.

Specifications for the 60 Hz alternator in the APU are: 12 KVA, 3 phase, 120/240 Vac. Specifications for the 400 Hz alternator, which supplies the field to the LIM alternator, are: 120 KVA, 3 phase, 120/208 Vac.

TURBOALTERNATOR SIMULATION

The following is an abbreviated set of equations used to simulate the turboalternator/linear induction motor dynamics.

Turbine Torque Command, T_{TC}:

$$T_{TC} = K_1 \alpha - K_2 n_T \tag{A.1}$$

where

α = throttle setting
n_T = turbine speed

Turbine and Gear Box:

$$n_T = \frac{60}{2\pi I} \int (T_{TC} - T_G)\, dt \tag{A.2}$$

where

I = inertial mass of turbine and alternator
T_G = loading torque of alternator

Alternator:

$$f_1 = K_3\, n_T \tag{A.3}$$

where

f_1 = alternator frequency

$$T_G = \frac{K_G\, VI \cos\theta}{n_G} \tag{A.4}$$

where

V = alternator voltage
I = alternator current
n_G = alternator speed = $f(f_1)$
$\cos\theta$ = load power factor

$$V = f(n_G,\ I_F,\ I,\ \cos\theta) \tag{A.4a}$$

Alternator Field Control, I_f:

$$I_f = \frac{K_{c1}}{sT_{do} + 1} \left[- V_f + \frac{T_2 s + 1}{s} (V_c + K_{c2} I - (K_{c3} I \text{ or } K_{c4} V_f)) \right] \tag{A.5}$$

where

V_f = field voltage
V_c = control voltage

Linear Induction Motor:

$$z = \left[(f_i X_B)^2 + (R_1 + f_i R_B)^{2\ 1/2}\right] \tag{A.6}$$

$$I = \frac{V}{z} \tag{A.7}$$

$$T_m = K_m I^2 R_B \tag{A.8}$$

where

z = LIM impedance = f (slip frequency)
T_m = LIM thrust

$$V_m = \frac{K_m}{J} \int (T_m - T_s - T_D)\ dt \tag{A.9}$$

where

V_m = vehicle speed
J = vehicle inertial mass
T_s = stiction drag
T_D = aerodynamic drag

DISCUSSION OF SIMULATION

With a throttle setting, α, prescribed, the turbine reacts with a first order lag to maintain speed, n_T. The alternator load torque is calculated using Equation (A.4) (which involves output parameters). The voltage output function for the alternator

is not described other than listing the variables involved. The LIM impedance, z, is a function of slip angle. LIM thrust is proportional to I^2 and Equation (A.9) is Newtons equation of motion for the vehicle.

APPENDIX B

DETAILED DESCRIPTION OF THE FORCED COMMUTATED INVERTER

INTRODUCTION

The forced commutated inverter provides variable frequency power to a load from a dc source. The conducting switches in the inverter are turned off, or "commutated", by auxiliary circuits which force the device current below a minimum value defined as the device holding current. When the thyristor current is below this holding current, the thyristor turns off and reverts to the blocking state. The device turn-off is not instantaneous. A short but finite time called the "turn-off time" is required for the thyristor switch to recover. Typical turn-off times are in the order of 20-30 microseconds for high current devices. The turn-off pulse occupies a short portion of the device conduction period which allows the commutation components to be sized for low duty cycle operation.

Several methods for generating commutation pulses have been developed. This appendix uses the McMurray circuit as a design example. The formulas presented for currents, voltages and power outputs, and the protection criteria can be applied to other inverter schemes.

DESCRIPTION

A schematic of a forced commutated inverter circuit is shown in Figure B.1. This circuit is commonly known as the McMurray[3] inverter and a description of its operation follows. The main power switches are SCR1 through SCR6 and the commutating switches are SCR7 through SCR12. The inductors L1 through L3 and capacitors C1 through C3 form the resonant circuits for commutation. Rectifiers D1 through D6 provide feedback paths for reactive power, regenerated power and resonant commutation current. Three power switches are on at all times (neglecting the period between commutation of one and the turn-on of another). The voltages that appear at the three load points and the resulting line to line voltages are shown in Figure B.2. The peak to peak line voltages are double the dc input voltage. For a unity power factor load or

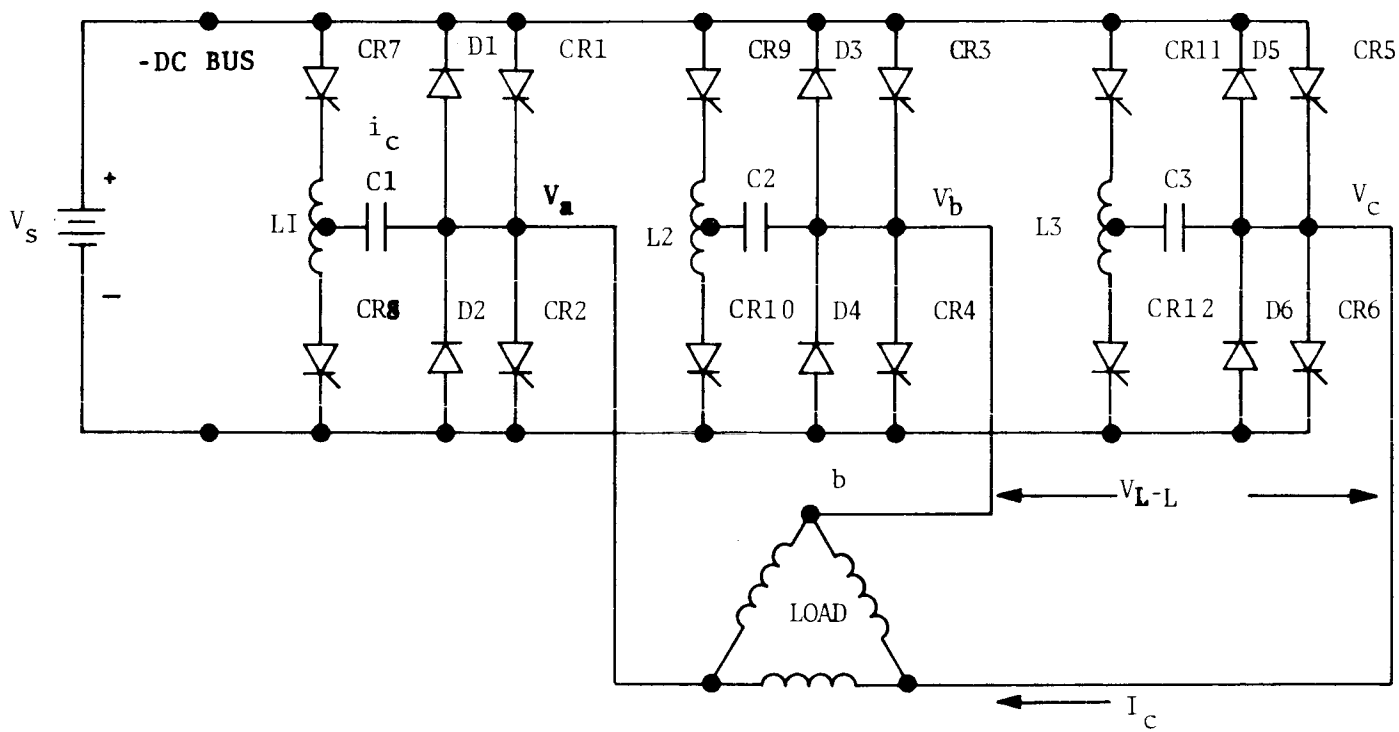

Figure B.1 Schematic of the Forced Commutated Inverter

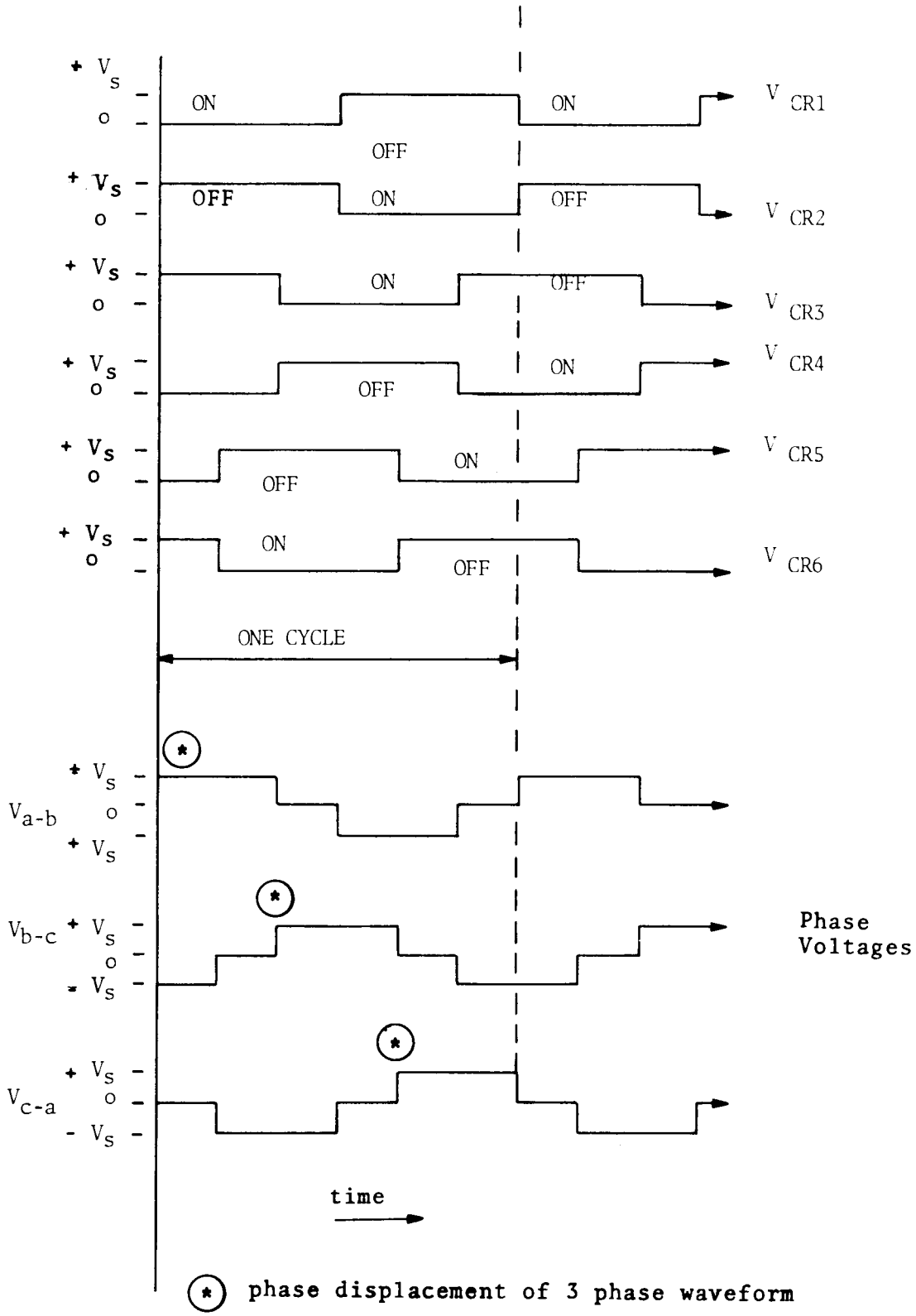

Figure B.2 Forced Commutated Inverter Switch and Phase Voltages

for a power factor corrected load, the line and phase currents are shown in Figure B.3. The 120° phase displacement characteristic of the three phase system is evident in the waveforms shown. The RMS phase voltage is given by

$$V_{RMS} = \sqrt{\frac{1}{T} \int_{o}^{t} V^2 \, dt} \qquad (B.1)$$

where

T is the period for one cycle
V is the voltage magnitude, either 0 or $\pm$ Vs
t is time

For square or rectangular wave shapes Equation (B.1) reduces to

$$V_{RMS} = Vs \sqrt{\frac{t_{on}}{T}} \qquad (B.2)$$

$\frac{t_{on}}{T}$ = phase duty cycle.

For the quasi-square wave inverter, the phase duty cycle is $\frac{2}{3}$ and the RMS voltage is

$$V_{RMS\phi} = Vs \sqrt{\frac{2}{3}} \qquad (B.3)$$

Similarly, the current waveform is also rectangular and the RMS current value is

$$I_{RMS\phi} = I_L \sqrt{\frac{t}{T}} \quad \frac{t}{T} = \frac{2}{3} \qquad (B.4)$$

but $\frac{t}{T} = \frac{2}{3}$

so $I_{RMS} = I_L \quad \frac{2}{3}$

where I_L is the phase load current.

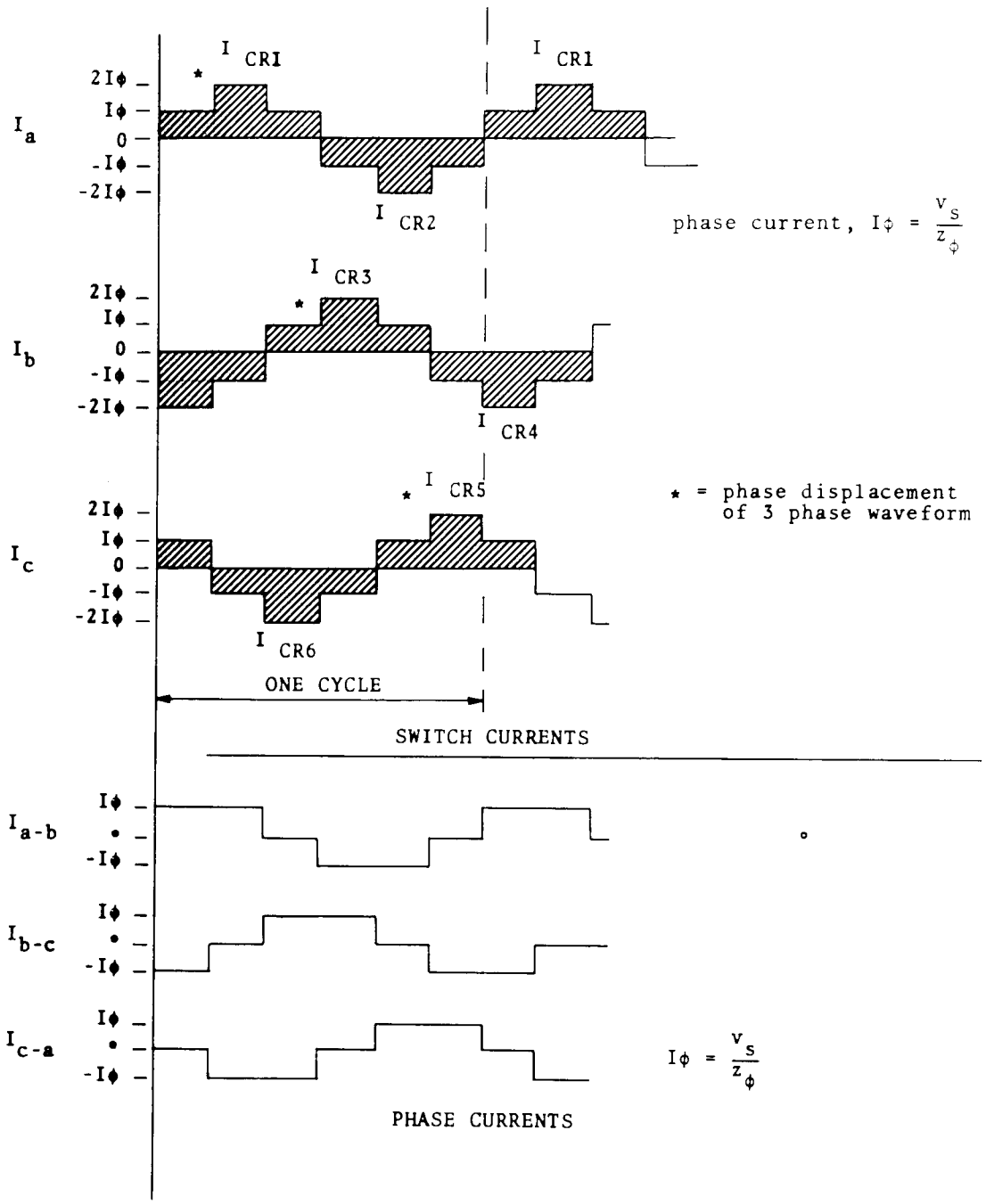

Figure B.3 Forced Commutated Inverter Switch and Phase Currents

The power delivered to each phase is the product of the phase voltage and currents

$$P_\phi = V_{\phi(RMS)} \quad I_{\phi(RMS)} .$$

The total power delivered to the load is the sum of the individual phase powers. In a balanced three phase system this is

$$P_t = 3P_\phi = 3V_\phi I_\phi \tag{B.5}$$

$$P_t = 3\left(Vs\sqrt{\frac{2}{3}}\right)\left(I_L\sqrt{\frac{2}{3}}\right)$$

$$P_t = 2Vs\ I_L\ ; \quad I_L = Vs/Z\phi . \tag{B.6}$$

The current through the thyristor switches is shown in Figure B.3. Each switch conducts for one half of the period, the peak switch current is double the individual phase current but the current at commutation is the phase current. The RMS switch current is:

$$I_{RMS} = \sqrt{\frac{1}{T}\int_0^t I^2\ dt} \tag{B.7}$$

$$= \sqrt{\frac{1}{6}\left\{\int_0^1 I_L{}^2\ dt + \int_2^3 4I_L{}^2\ dt + \int_3^4 I_L{}^2\ dt\right\}}$$

$$= I_L\sqrt{\frac{1}{6}\left\{1 + 4 + 1\right\}} = I_L \tag{B.8}$$

From the known parameters of a system, typically the power output required and input voltage available, the selection of power thyristors can be initiated. The thyristor voltage rating is determined from the maximum value of Vs. For system reliability

the specified thyristor blocking voltage should be reduced or derated by factors which reflect the quality of the prime voltage supply and the degree of transient suppression applied. Similarly, the design current capacity should be determined after consideration of the worst case load and temperature conditions. For high power systems operation of switches, in series for voltage withstanding capability, or parallel for current carrying capacity may be necessary. In the forced commutated inverter the power switches are turned off by auxiliary components which contribute to the system size and weight. The commutation component impact on volume and weight can be minimized if the power thyristors selected have a fast turn-off capability. Presently available devices do not combine the optimum parameters of high voltage blocking capability, high current capacity and fast turn-off so the selection of a power device is the result of design trade-offs in which these parameters are evaluated.

Thyristor characteristics place restrictions on the types of stresses that may be applied to the device. The major considerations are the rates of current build-up at turn-on and the rates of reapplied voltage at turn-off. If the forward current is allowed to increase at a rate in excess of the device rating, there is danger of forming localized hot-spots within the thyristor switch which may burn through the junctions and destroy the thyristor. The device does not switch on to a low impedance state instantaneously, rather the low impedance areas spread out from the gate contact areas until the entire junction area is turned on.

During turn-off, the voltage across the thyristor must be prevented from rising too rapidly. The thyristor switch from the high conductance to low conductance state when the anode current is reduced below the holding current. If the anode current is allowed to exceed that holding current, the device retriggers and switches on again. The rate of rise of reapplied voltage

is limited by the capacitive coupling between the anode and gate electrodes. From the formula for current in a capacitive circuit we have

$$I = C \frac{dv}{dt} \quad \text{or} \quad \frac{dV}{dt} = \frac{I}{C}$$

where

I is the minimum gate current needed to trigger the thyristor to its high conductance condition.

C is the anode to gate inter-electrode capacitance.

The $\frac{dV}{dt}$ then is the maximum allowable change in anode to gate voltage which the thyristor can handle. If the rate of change of voltage exceeds that limit, the current through the inter-electrode capacitance to the gate is high enough to re-trigger the thyristor.

The thyristors are protected from high $\frac{di}{dt}$ and $\frac{dV}{dt}$ stresses by the addition of external protective components. These add to circuit losses, size and weight. However, they are necessary precautions in all thyristor power circuits.

For limitation of turn-on currents, an inductance is placed in series with the device to be protected; the inductor may not be necessary for a lagging power factor load but for a leading power factor, unity power factor or a power factor corrected lagging load the inductor called a "snubber" is included.

The voltage across the inductor is given by the relationship

$$E = L \frac{di}{dt}$$

E is the dc input voltage to be switched by the thyristor,

$\frac{di}{dt}$ is the maximum rate of load current rise which the thyristor can safely handle.

The minimum inductance L is then determined as

$$L = \frac{E}{\frac{dI}{dt}} \tag{B.9}$$

Since all of the thyristor load current must flow through this inductance, it must be sized large enough to handle full load current.

Specifications for thyristors include the maximum allowable $\frac{dV}{dt}$ and $\frac{di}{dt}$ ratings for devices. Limitation of reapplied $\frac{dV}{dt}$ is accomplished by paralleling the thyristor with enough capacitance to limit the voltage change to that specified. The rate of rise of anode voltage given on the manufacturer's data sheet corresponds to the slope of a straight line which starts at the origin and passes through the one time constant point of a voltage which rises exponentially from zero to the rated forward voltage $\left[\frac{V}{V_{MAX}} = 1 - e^{\frac{-t}{T}}\right]$ of the thyristor. (See Figure B.4.) The point of intersection of the $\frac{dV}{dt}$ line is at t = one time constant (T) which corresponds to

$$\frac{V}{V_{MAX}} = (1 - e^{-1}) = 0.632$$

$$V = 0.632\ V_{MAX}$$

If $dV = 0.632\ V_{MAX}$

and $dt = T$

Then

$$\frac{dV}{dt} = \frac{0.632\ V_{MAX}}{T}$$

$$T = \frac{0.632\ V_{MAX}}{\frac{dV}{dt}} \tag{B.10}$$

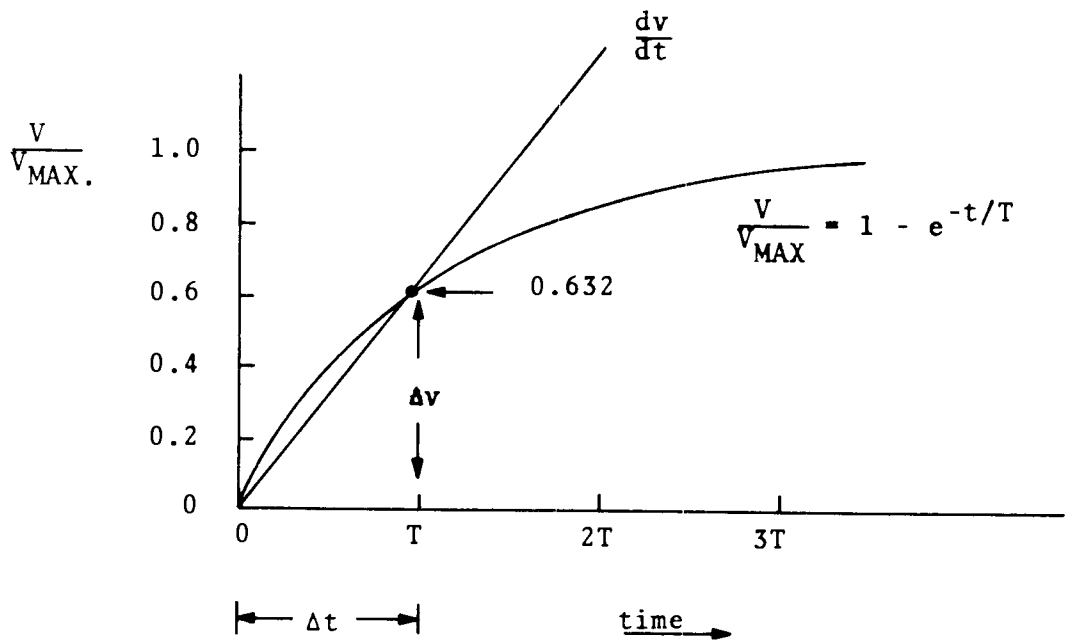

Figure B.4 Definition of dV/dt Specification

To prevent premature turn on of the thyristor, the reapplied forward voltage must not have a time constant exceeding that solved for in Equation (B.10). The minimum load resistance is known from the output power specifications as $R_{L_{(MIN)}}$. The shunt capacitor then is given by the relationship

$$T = R_{L_{(MIN)}} \quad Cs$$

$$Cs = \frac{T}{R_{L_{(MIN)}}} = \frac{0.632 \ VMAX}{(\frac{dv}{dt}) \ (R_L)} \qquad (B.11)$$

Figure B.5 shows the location of the protective components in the power thyristor circuit. R_L in combination with C_s limits the anode voltage rate of rise, and L_s limits the anode current rate of rise. D_{fwd} provides a low resistance path for the current to C_s during recovery. When the thyristor is gated on again, it discharges C_s. R_{LIM} is included to hold the peak discharge current

within the device capability. The capacitor C_s charges to the supply voltage V_s during the time that the thyristor is off; the energy stored is

$$\varepsilon = \frac{1}{2}C_s V_s^{\,2} \tag{B.12}$$

During turn-on of the thyristor, this energy is dissipated in the limiting resistor. The total power loss in the resistor is a function of the energy stored and the frequency. The resistance magnitude does not affect the loss if the discharge time constant is short enough to allow C_s to discharge completely when the thyristor is on. The power loss in the resistor is

$$P = \frac{1}{2}C_s V_s^{\,2} f \tag{B.13}$$

C_s = capacitance
V_s = supply voltage
f = frequency of operation

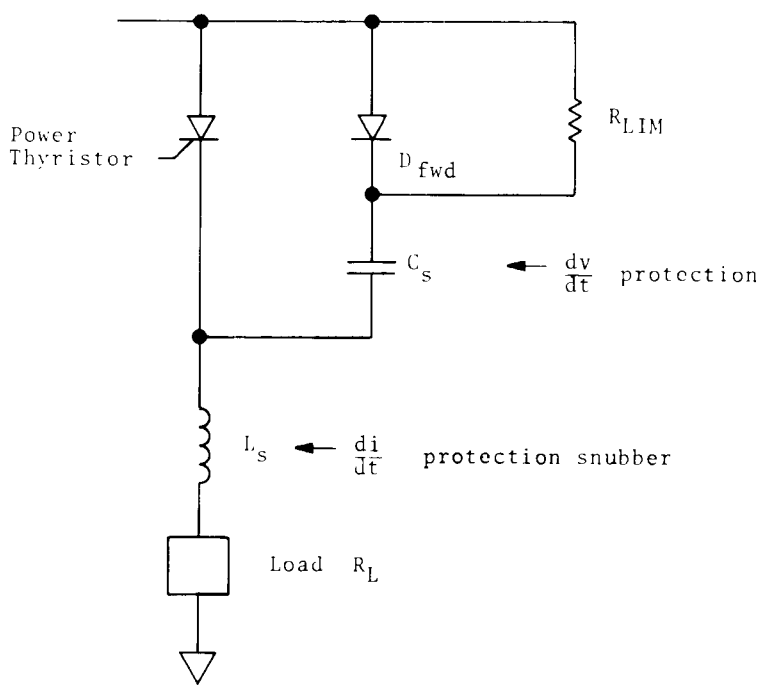

Figure B.5 Power Thyristor Protection

The resistor value is generally not a critical parameter. It should be large enough to limit the initial thyristor current yet small enough to allow the capacitor to discharge completely during the thyristor conduction period at the highest frequency of operation.

$\frac{T_{MIN}}{2}$ = shortest conduction period

5RC = time to completely discharge C

$$5RC < \frac{T_{MIN}}{2} \qquad R_{MAX} < \frac{T_{MIN}}{10_c} \tag{B.14}$$

R_{MIN} can be determined from device parameters

$$R_{MIN} < \frac{V_s}{I_{INIT}} \tag{B.15}$$

where V_s is the supply voltage and I_{INIT} is the initial current capability of the device without $\frac{di}{dt}$ protection. D_{fwd} is selected to conduct the peak capacitor charge current. The maximum RMS current through it must be within its rating. The maximum RMS diode current is

$$I_{RMS} \sqrt{\frac{1}{T} \int I^2 dt}$$

$$I = I_{MAX}\, e^{-t/T}$$

$$T = 1/f_{max}$$

$$I_{RMS} = I_{MAX} \sqrt{\frac{1}{T} \int_0^{\psi} e^{\frac{-2t}{R_L c}}\, dt} \qquad \psi >> \frac{R_L C}{2}$$

$$= I_{MAX} \sqrt{\frac{R_L C}{2T}} \tag{B.16}$$

$$= I_{MAX} \sqrt{\frac{1}{2} R_L C f_{MAX}}$$

Manufacturer's data sheets provide typical turn-off information. The specification for device turn-off time may be given for a reapplied voltage rate lower than the maximum rate the thyristor can support. To allow the thyristor to revert to the blocking state, the turn-off pulse width must be increased as the reapplied voltage rate is increased. The design turn-off time is determined from an analysis of the several factors which affect the device recovery characteristics. As the thyristor turn-off time, and load current at turn-off are increased the size, weight and losses in the entire system also increase. In addition to reapplied voltage rate, other factors which affect device turn-off time are:

1. Temperature

   T_{off} increases as the junction temperature increases.

2. Forward current

   T_{off} increases as forward current at the time of commutation increases.

3. Reverse current

   As the reverse current forced through the thyristor at turn-off is increased, the junction re-combination time is decreased and turn-off time is also decreased.

A single leg of a forced commutated inverter bridge is shown in Figure B.6. Components for thyristor protection as well as commutation are shown. Gating circuits and current sensing circuits are not shown. The main power thyristors are SCR1 and SCR2; all other components are included for either the protection or commutation of these units.

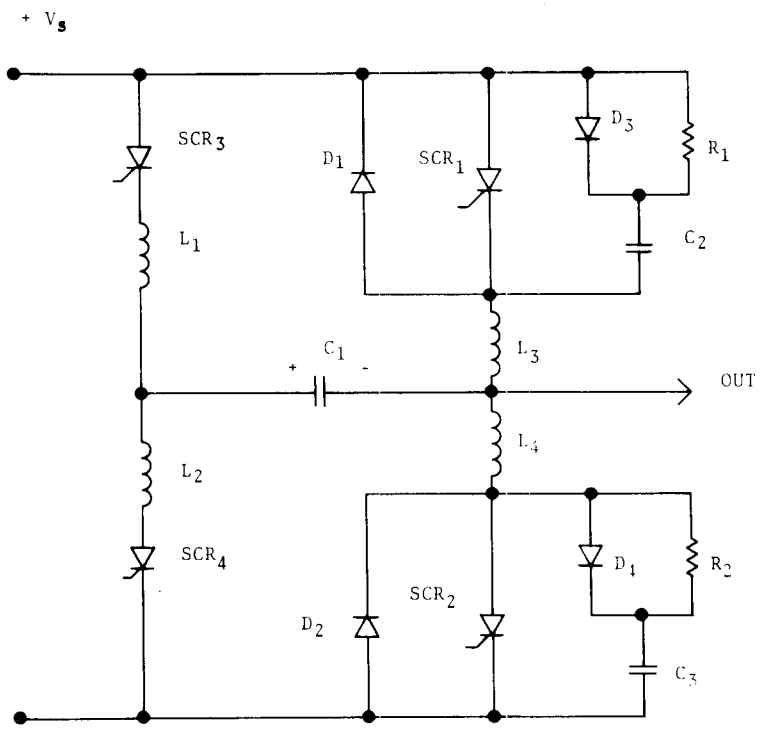

Figure B.6 One Leg of Forced Commutated Inverter

Either SCR1 or SCR2 is on and conducting at all times. When SCR1 is on, the commutating capacitor C1 is charged with the polarity shown in Figure B.6. Load current flows through SCR1 and all other thyristors are off. In order to turn SCR1 off, the current through it must be reduced to a value less than the holding current for a period exceeding the maximum turn-off recovery time of the thyristor. This is accomplished by turning on SCR3 which is the commutation thyristor for SCR1. With both SCR1 and SCR3 on, the voltage on C1 is impressed across the series combination of L1 and L3. The response of the series LC circuit results in sinusoidal current and voltage waveforms at a fundamental frequency of

$$f = \frac{1}{2\pi\sqrt{LC_1}} \quad \text{where } L = L_1 + L_3. \tag{B.17}$$

The capacitor, with an initial charge of the polarity shown in Figure B.7, discharges through the inductor. The inductor current is initially zero, it rises sinusoidally at the resonant frequency reaching a peak and decaying again to zero. When the magnitude of this current pulse equals the load current through the power thyristor being commutated (point A), SCR begins the turn-off process. As the current increases further towards the peak value, the feedback diode conducts, preserving the low impedance in the series resonant circuit and maintaining a reverse bias on the off-going thyristor. Midway in the commutation period (point B), the current through the inductor is at a maximum. At that time all of the energy stored in the capacitor has been delivered to the circuit. Some of that energy has been dissipated as heat in the series elements but most of it has been stored by the inductor as a magnetic field which begins to collapse. This collapsing field supports the current in the circuit maintaining a forward bias on the feedback diode, a reverse bias on the off-going thyristor and charging the capacitor to peak voltage in the opposite polarity. When the resonant current pulse decreases to zero (point C), the commutating SCR turns off. With the turn-off of the commutating SCR, the circuit is conditioned for the next commutation operation. The inductor current is zero, and the capacitor is charged with the proper polarity to commutate SCR2 which would be the next power thyristor to be turned on.

The commutation components for the power thyristors consist of the commutating thyristor, the series resonant LC network and the feedback diode. Although the RMS currents in the commutation circuits are low, the peak currents are high and all of the devices must be selected on the basis of their repetitive peak current capability.

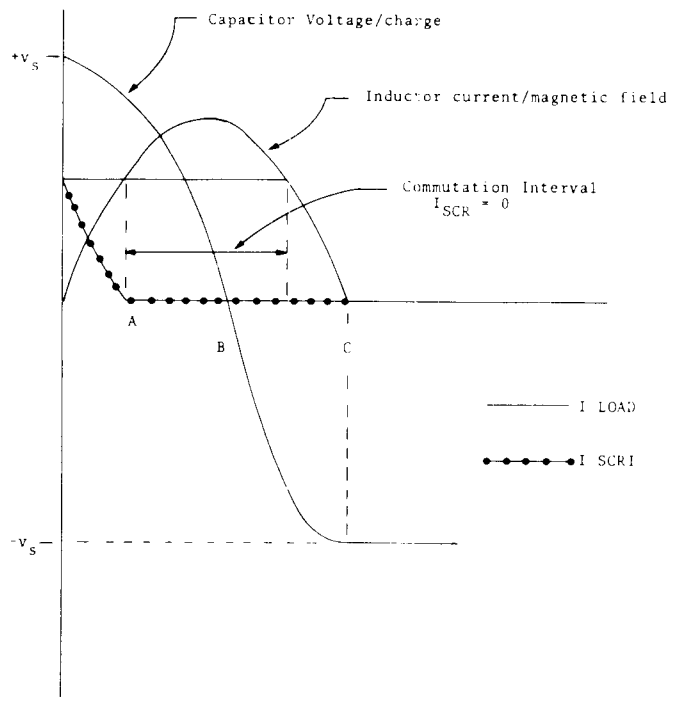

Figure B.7 Commutation Current and Voltage Waveforms

The commutating thyristor and the feedback diode should have low forward impedance to minimize losses during the commutation period. In addition, the feedback diode provides a current path for reactive load current and regenerative current. It should be sized to handle the expected feedback current. An important characteristic necessary in the feedback diode is fast reverse recovery time. The reversal of voltage across this diode after the commutation interval is very fast; if the diode is slow in recovering to its blocking state, the instantaneous device power dissipation may exceed its capability and destroy it.

The optimum values for L and C are derived by W. McMurray in Reference 3, in which the combination of L and C which requires the least energy for commutation is calculated. The results of this derivation yield the following formulas for L and C:

$$L = 0.397 \frac{E_{co}\ t_{oo}}{I_{Lo}} \tag{B.18}$$

$$C = 0.893 \frac{I_{Lo}\ t_{oo}}{E_{co}} \tag{B.19}$$

where

E_{co} = minimum Vs
t_{oo} = maximum turn-off time
I_{Lo} = maximum load current $I\phi$

With these values of L and C the peak commutation current is 1.5 times the maximum load current.

APPENDIX C
SERIES AND PARALLEL OPERATION OF THYRISTORS

At high-power levels, series and parallel arrangements of thyristors must often be used to provide adequate power-switch voltampere capability. The distribution of voltage and current stress among thyristors arranged in series or parallel arrays is an essential consideration in the design of such arrays. The distribution of stresses must be considered for both static and dynamic conditions:

1. When a number of thyristors are connected in series to form a high-voltage power switch, an unbalanced distribution of thyristor voltages may arise when the thyristors are in either the forward blocking or the reverse voltage condition. This type of static voltage unbalance occurs due to differences in the leakage currents of the individual thyristors.

2. When thyristors are operated in parallel to provide enhanced current handling capacity, it is important that the load current distribute evenly among the individual thyristors. Unfortunately, uneven current flow often occurs in this parallel situation due to the unavoidable variation of the voltage versus current characteristics of individual thyristors. Thus, it is imperative to incorporate current distributing networks to force sharing among parallel connected thyristors. The current sharing problem can be classified as a static problem; however, it should be noted that under some conditions a dynamic unbalance between parallel devices can occur during turn-on due to differences in the turn-on characteristics of individual devices.

3. Dynamic voltage unbalance among series connected thyristors can occur in certain circuits if the thyristors have different individual turn-on characteristics or if the trigger pulses to the thyristors are not synchronized or are unbalanced. In general, this form of voltage unbalance is avoided through the use of synchronized, hard gate triggering.

4. Dynamic reverse voltage unbalance can occur in series thyristor circuits because of differences in the stored charge and recovery characteristics of individual thyristors. In some situations, capacitive balancing networks must be inserted in parallel with the thyristors to provide stress balance during the reverse recovery period.

An important inherent characteristic of the inverter is that the distribution of voltage and current stress among individual series or paralleled thyristors is nearly uniform for all dynamic situations. To accomodate static unbalances, a simple resistor or other nonlinear circuit can be used in parallel with the thyristors to prevent overvoltage conditions from developing due to unbalanced leakage currents.

SERIES OPERATION (STATIC)

As noted above, when thyristors are operated in series, unequal voltage distributions may occur due to differences in the leakage currents of individual devices. In some instances, the simple parallel resistors shown in Figure C.1 can be utilized to maintain a balanced voltage distribution between thyristors. The worse case voltage unbalance occurs in a series string of thyristors when a thyristor with minimum leakage is connected in series with thyristors having maximum leakage. Under these conditions, the maximum voltage which can be developed across any thyristor is given by Equation (C.1).

$$v_{tp} = \frac{v_{tt} + (n - 1)R_s \, \Delta i_b}{n} \qquad \text{(C.1)}$$

where

v_{tp} = maximum voltage which can be developed across any thyristor.

v_{tt} = total voltage across series thyristor string.

n = number of thyristors in string.

Δi_b = $i_{b(max)} - i_{b(min)}$.

$i_{b(max)}$ = maximum thyristor leakage current (forward or reverse).

$i_{b(min)}$ = $\begin{cases} \text{minimum thyristor holding current or minimum thyristor breakover current (forward).} \\ \text{minimum thyristor leakage current (reverse).} \end{cases}$

Equation (C.1) can be manipulated to provide an expression for the minimum value of resistance, R_s, necessary to provide adequate voltage distribution among thyristors.

$$R_s \leq \frac{nv_{tp} - v_{tt}}{(n-1)\ \Delta i_b} \qquad \text{(C.2)}$$

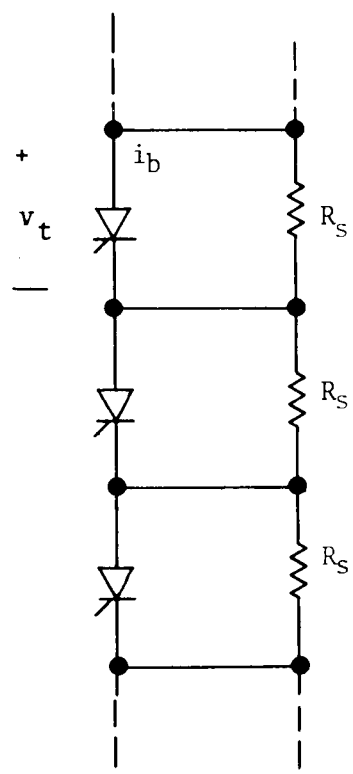

Figure C.1 Series Thyristor Connection Showing Voltage Equalizing Resistors

One undesirable characteristic of the resistive voltage distribution string is power dissipation. Relatively small values of resistance may be required to provide acceptable voltage distribution among thyristors; however, this results in an appreciable power dissipation in the balancing resistors. The total power dissipation in all of the balancing resistors in a series string of n thyristors is given in Equation (C.3).

$$P_{dts} = \frac{v_{tt}^{2}}{nR_s} = \frac{(n-1)\ \Delta i_b\ v_{tt}^{2}}{n^2\ v_{tp} - nv_{tt}} \qquad \text{(C.3)}$$

where

P_{dts} = total peak power dissipation in voltage distribution resistances (R_s) assuming approximate voltage balance.

Fortunately, relatively large voltage distributing resistors can be used in many circuits because the leakage currents through silicon thyristors are small. Consequently, the power dissipation without the voltage distribution resistors is sufficiently small. A typical numerical answer is included to illustrate this point.

$$\begin{aligned} v_{tt} &= 5000 \text{ volts}, \\ n &= 3, \\ v_{tp} &= 1800 \text{ volts}, \\ \Delta i_b &= 10^{-2} \text{ amperes}, \\ P_d &= 417 \text{ watts peak}. \end{aligned} \qquad \text{(C.4)}$$

Thus, for a total switch voltage capability of 5000 volts, three thyristors can be connected in series with no thyristor experiencing more than 1800 volts. The difference in leakage current between thyristors, 0.01 amperes, is greater than that normally encountered between most standard thyristors. As shown in Equation (C.4), the series configuration of thyristors with voltage sharing resistors results in only 417 watts peak power dissipation in the voltage distributing resistors.

In some situations, the power dissipation in the voltage equalizing resistors is not permissible due to efficiency requirements. In such cases, nonlinear elements can provide voltage equalization with significantly less power dissipation. One possible series configuration is shown in Figure C.2 using avalanche diodes to distribute voltages. The worst case power dissipation for this arrangement is:

$$P_{dtd} = \Delta i_b v_{tp} (n-1), \qquad (C.5)$$

where

P_{dtd} = maximum total peak power dissipated in avalanche diodes,

n = number of thyristors in string,

v_{tp} = limiting voltage determined by avalanche diodes.

Inserting the numbers used in the numerical example above, the total power dissipated in the avalanche diodes under worst case unbalance conditions is fifty-four watts.

PARALLEL OPERATION (STATIC AND DYNAMIC)

Thyristors may be operated in parallel to provide enhanced current handling capability if circuit precautions are taken to insure a balanced current distribution among paralleled devices. Two circuit arrangements to provide balanced current distribution between paralleled thyristors are shown in Figure C.3. Small resistors can be inserted in series with the thyristors (Figure C.3a) in order to prevent excessive current flow through individual devices. This current balancing technique is especially effective for static balancing. In some situations, it is possible to use a nondissipative transformer to provide current balance between thyristors. This approach is shown in Figure C.3(b). The use of the techniques shown in Figure C.3 can provide reasonable current balance between parallel thyristors in situations where current balance is not inherent.

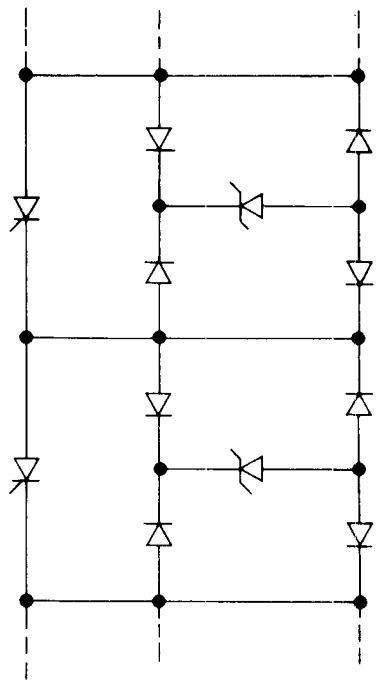

Figure C.2 Series Thyristor Connection Using Avalanche Diodes to Distribute Voltages

SERIES OPERATION (DYNAMIC)

When thyristors are operated in series, dynamic voltage unbalance conditions occur during turn-on and during commutation. Voltage unbalance during turn-on is caused by differences in the turn-on speed of individual thyristors and by differences in the trigger signal (amplitude, synchronization and duration). Turn-on voltage unbalance can generally be eliminated by providing the series connected thyristors with large simultaneous trigger pulses having identical durations.

Unbalanced voltage distributions can occur among series connected thyristors during the commutation process due to variations in the reverse recovery characteristics of individual devices. This form of voltage unbalance condition is common in force commutated circuits. To equalize the reverse voltage stress applied

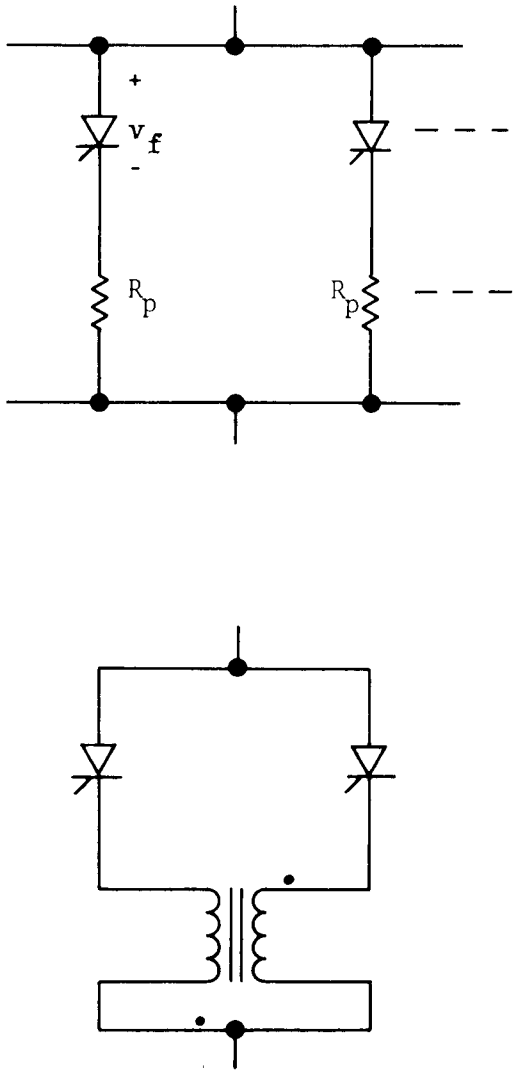

Figure C.3 Parallel Operation of Thyristors
a) With Current Balancing Resistors
b) With Current Balancing Transformers

to series connected thyristors, an RC network can be connected in parallel with the individual thyristors as shown in Figure C.4. The value of the balancing capacitor, C_s, is selected to control the voltage unbalance among thyristors assuming the worse case unbalance in recovered charge. The damping resistor, R_D, is selected to control the inrush current into the thyristors when they are turned on, due to the discharge of the balancing capacitors, C_s. In certain applications, it is useful to include diodes, D_s, so that the balancing capacitors can also provide forward dv/dt limiting.

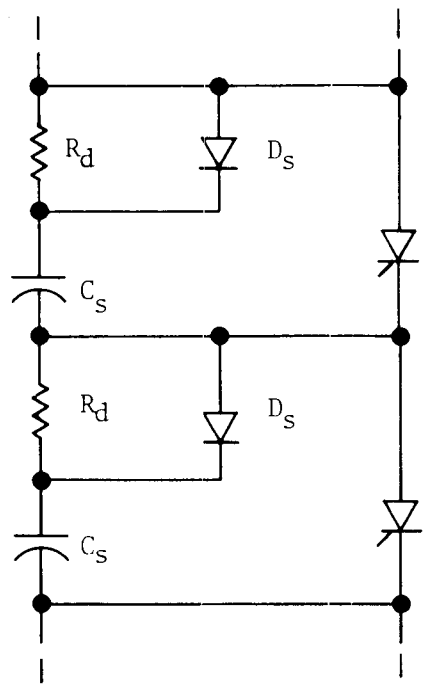

Figure C.4 Series Thyristor Connection Using Shunt Capacitors to Equalize Thyristor Voltages During Commutation

SERIES OPERATION THYRISTORS IN SERIES INVERTER

The series inverter may be broken down into segments composed of four bridge connected thyristors and one capacitor. For convenience, these segments are referred to as cells. One important advantage of the series inverter is that these cells may be connected in series to obtain higher voltage capability without causing any dynamic voltage unbalance among the thyristors used within the cells. Some of the details of this voltage sharing capability are discussed in the paragraphs below.

A series connection of series inverter cells is shown is in Figure C.5. The resistors, R_s, are used to insure that static voltage balance is maintained between the thyristors. The thyristors are fired in pairs: S1, S4 and S2, S3. When any pair of thyristors is conducting, the voltage across the opposite pair is completely defined by the capacitor voltage. Therefore, the capacitor forces voltage balance under all dynamic conditions.

When the series inverter cells are operated at high frequencies, the capacitors are the primary mechanism for maintaining voltage balance on the thyristors. Differences in the capacitor values and variations in the trigger signals to the thyristors do not disturb the voltage balance. If a situation with n series inverter cells connected in series is analyzed, it is easily shown that the voltage experienced across the m_{th} capacitor in the series arrangement of cells is as noted in Equation (C.6).

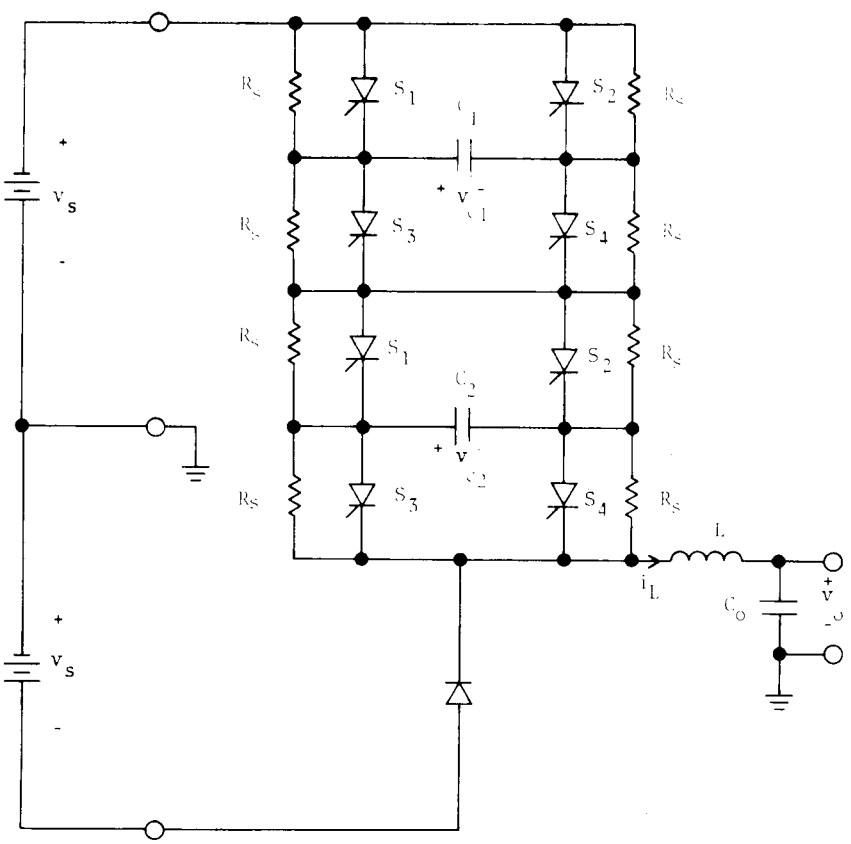

Figure C.5 Series Connection of Series Inverter Cells

$$- \frac{1}{C_m} \left[\frac{2v_s + \sum_{j=1}^{n} v_{C_j}(0)}{\sum_{j=1}^{n} \frac{1}{C_j}} \right] + v_{C_m}(0) \leq v_{C_m}(t)$$

$$\leq \frac{1}{C_m} \left[\frac{2v_s + \sum_{j=1}^{n} v_{C_j}(0)}{\sum_{j=1}^{n} \frac{1}{C_j}} \right] + v_{C_m}(0)$$

$$m = 1, 2, ----, n \qquad (C.6)$$

where

$v_{C_m}(t)$ = voltage across capacitor C_m,

$v_{C_m}(0)$ = voltage across capacitor C_m at $t = 0$,

$$- 2v_s \leq \sum_{m=1}^{n} v_{C_m}(0) \leq 0, \qquad (C.7)$$

n = number of cells in series.

Since during conduction the voltage stress experienced by any thyristor can never be greater than the voltage on the series capacitor, Equation (C.6) defines a maximum voltage limit for all thyristors used within the series connected series inverter cells. The series resistors, R_s, are used to provide static voltage distribution among the series thyristor cells as described earlier.

A numerical example can help illustrate operation of the series connected, series inverter cells.

n = 3,

$2v_s$ = 5000 volts,

$v_{C_1}(0) = v_{C_2}(0) = v_{C_3}(0) = -1500$ volts,

$C_1 = .8C_2 = .8C_3,$

$-1692 \text{ volts} \le v_{C_1}(t) \quad 2154 \text{ volts},$

$-1654 \text{ volts} \le v_{C_2}(t) \quad 1423 \text{ volts},$

$-1654 \text{ volts} \le v_{C_3}(t) \quad 1423 \text{ volts}.$

In the example considered above, three series inverter cells are connected in series to provide a total switch capability of 5000 volts. In addition, a 20% unbalance between capacitor C_1 and capacitors C_2 and C_3 is included to illustrate the affect of unequal capacitances. Since capacitor C_1 is smaller than capacitors C_2 and C_3, this capacitor experiences greater extreme voltages.

If the thyristors in the series inverter cells are triggered at a very low frequency, the initial capacitor voltages just prior to triggering are approximately zero: $v_{C_m}(0) = 0$. Under this condition, Equation (C.6) reduces to

$$\frac{-2v_s}{C_m \sum_{j=1}^{n} \frac{1}{C_j}} \le v_{C_m}(t) \le \frac{2v_s}{C_m \sum_{j=1}^{n} \frac{1}{C_j}} \quad \text{for } m = 1, 2, ---, n \qquad (C.8)$$

Under conditions similar to those of the numerical example above, Equation (C.8) yields:

$n = 3,$

$2v_s = 5000 \text{ volts},$

$v_{C_1}(0) = v_{C_2}(0) = v_{C_3}(0) = 0 \text{ volts},$

$C_1 = .8\ C_2 = .8\ C_3,$

$|v_{C_1}(t)| \le 1923 \text{ volts},$

$|v_{C_2}(t)| \le 1538 \text{ volts},$

$|v_{C_3}(t)| \le 1538 \text{ volts}.$

Normally, with triggering occurring at a rate of several kilohertz, the voltage equalizing resistors cause the magnitude of the extreme voltages indicated in Equation (C.6) to equalize. Under this balanced condition, Equation (C.6) again reduces to Equation (C.8).

PARALLEL OPERATION OF THYRISTORS IN SERIES INVERTER

In instances when an output current is required which exceeds the rating of individual thyristors, two or more series inverter cells may be operated in parallel to provide enhanced output current capacity. A parallel configuration of series inverter cells is shown in Figure C.6. The arrangement of Figure C.6 using separate inductors in conjunction with two separate series inverter cells permits the cells to be triggered independently. As a result, reduced output voltage ripple can be realized by triggering the cells separately using a staggered timing arrangement. The output capability of the paralleled cells is simply the sum of the individual output current capability of each cell. Thus, the output current capability of the paralleled series inverter cells is given by

$$i_{op}(\text{average}) = \frac{8v_s^{\,2} \sum_{j=1}^{k} \sqrt{\frac{C_j}{L_j}}}{(v_s + v_o)\cos^{-1}\left(\frac{-v_s - v_o}{3v_s - v_o}\right) + 2\sqrt{2v_s(v_s - v_o)}} \qquad \text{(C.9)}$$

where

k = number of paralleled cells,

$i_{op}(\text{average})$ = average total output current capability of paralleled cells.

v_s, v_o, C_j, L_j are defined in Figure C.6.

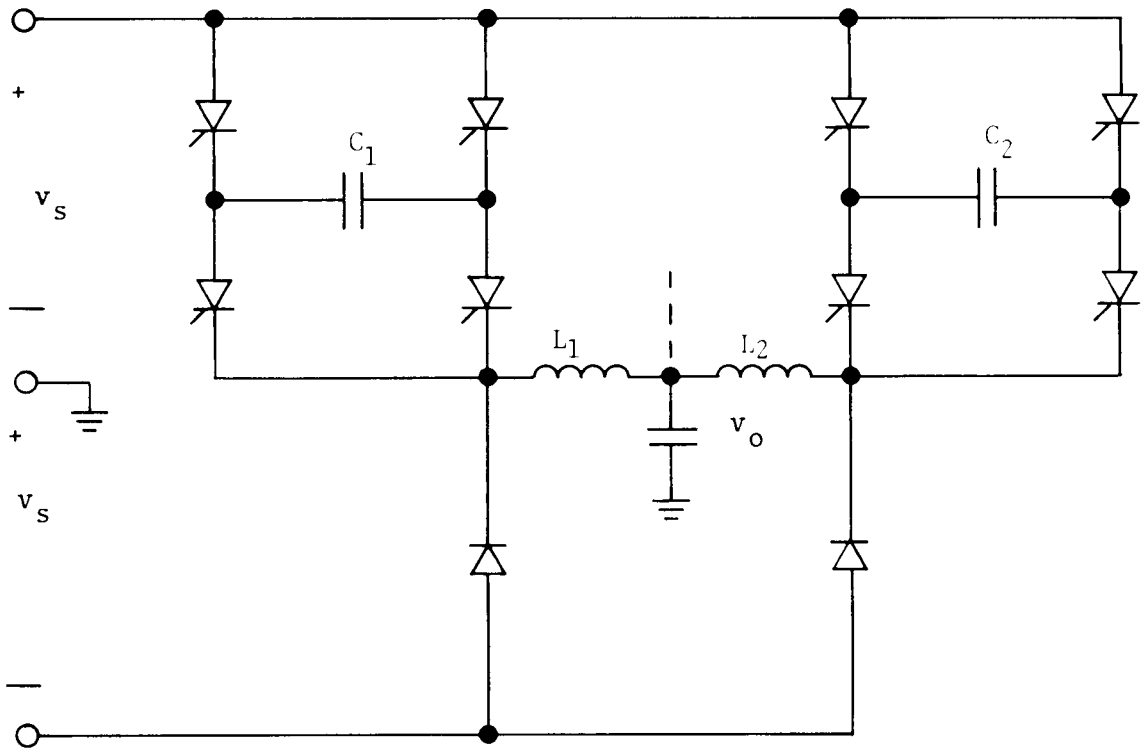

Figure C.6 Parallel Operation of Series Inverter Cells

It is important to note that the current levels supplied by each series inverter cell are completely determined by the inductance and capacitance associated with that cell in conjunction with the supply voltage, v_s, and the output voltage, v_o. The LC circuit which is inherent in the series inverter cell provides the mechanism for balanced parallel operation.

The series inverter cells may be operated in parallel without using separate inductors. This arrangement for parallel operation is illustrated in Figure C.7. The average output current capability of series inverter cells paralleled in the manner indicated in Figure C.7 is:

$$v_{op}(\text{average}) = \frac{8v_s^2 \sqrt{\dfrac{\sum_{j=1}^{k} C_j}{L}}}{(v_s + v_o)\cos^{-1}\left(\dfrac{-v_s - v_o}{3v_s + v_o}\right) + 2\sqrt{2v_s(v_s - v_o)}} \tag{C.10}$$

where

k	=	number of paralleled cells,
i_{op}(average)	=	average total output current capability of paralleled cells.

v_s, v_o, C_j, L are defined in Figure C.7

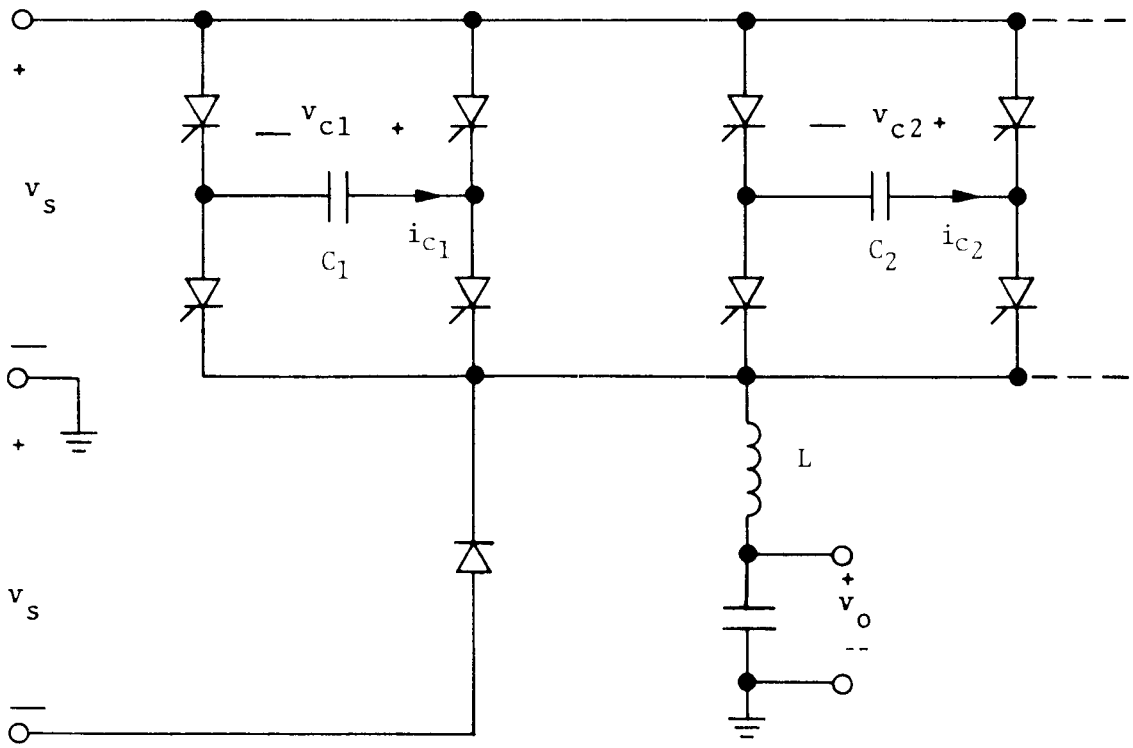

Figure C.7 Parallel Operation of Series Inverter Cells Using Single Inductor

Current balance in the parallel configuration indicated in Figure C.7 depends upon voltage balance between the individual capacitors in the series inverter cells. If the initial voltages on the capacitors are equal, then the current through inductor, L, will be equally divided among the series inverter cells. However, variations between the initial capacitor voltages cause unbalanced initial current flow through the series inverter cells. During

initial operation, therefore, it is possible to have the entire output current flowing through only one series inverter cell. This unbalanced current flow continues until the voltage across the capacitor in the conducting series inverter cell becomes equal to the voltage in another series inverter cell. Current flow then divides evenly between the two cells causing the capacitor voltages in these cells to shift together. Subsequently, additional cells will commence operation in parallel with the two cells as the voltage of the capacitors in the active cells becomes equal to the voltage existing in the inactive cells.

The worse case unbalance condition occurs when only one series inverter cell conducts initially. The current flow in the single series inverter cell is given in Equation (C.11).

$$i_{C_{ju}}(t) = (3v_s - v_o)\sqrt{\frac{C}{L}}\ \sin\frac{t}{\sqrt{LC}}\quad j\quad 0 \le \frac{t}{\sqrt{LC}} \le \frac{\pi}{2} \qquad \text{(C.11)}$$

$C = C_j \qquad j = 1, 2, \ldots, k,$

$i_{C_{ju}}(t)$ = initial current flow in j^{th} series inverter capacitor under worst case unbalance. (Initial capacitor voltage is assumed to be $2\ v_s$.)

If all series inverter cells are operating in balanced parallel conduction, the current in the same cell would be

$$i_{C_{jb}}(t) = \frac{1}{\sqrt{n}}(3v_s - v_o)\sqrt{\frac{C}{L}}\ \sin\frac{t}{\sqrt{nCL}}\ ;\ 0 \le \frac{t}{\sqrt{nCL}} \le \frac{\pi}{2} \qquad \text{(C.12)}$$

$i_{C_{jb}}(t)$ = initial current flow in j^{th} series inverter capacitor in balanced operation. (Initial capacitor voltage is assumed to be $2\ v_s$.)

In practice, an unbalanced conduction by a single series inverter cell is permissible providing that the unbalanced conduction does not continue for sufficient time to permit the current flow through

the single conducting cell to exceed the peak current level which would normally be experienced in a cell under balanced conduction. Although a single series inverter cell conducts initially in unbalanced operation, excessive current flow through this cell does not occur immediately due to the inductance in series with the cell. An expression giving the maximum permissible initial voltage unbalance between a fully charged series inverter cell and a number of discharged series inverter cells can be derived from Equations (C.11) and (C.12). This worst case expression is given in Equation (C.13).

$$\Delta v_{C_o} = (3v_s - v_o)\left(1 - \sqrt{1 - \frac{1}{k}}\right) \tag{C.13}$$

where

Δv_{C_o} = initial voltage difference between charged series inverter cell and all other partially discharged cells.

k = number of cells in parallel.

Equation (C.13) can be manipulated to obtain an expression for the maximum number of series inverter cells which can be paralleled as a function of the initial unbalance in series capacitor voltages. This expression is shown in Equation (C.14).

$$k_{max} \leq \frac{\left[3 - \left(\frac{v_o}{v_s}\right)\right]^2}{2\left(\frac{\Delta v_{C_o}}{v_s}\right)\left[3 - \left(\frac{v_o}{v_s}\right)\right] - \left(\frac{\Delta v_{C_o}}{v_s}\right)^2} \tag{C.14}$$

k_{max} = maximum permissible number of parallel connected series inverter cells.

It is conceivable that the initial capacitor voltage of a single series inverter cell could be offset by as much as 0.1 v_s due to parasitic reactance of the interconnecting lines between paralleled cells. Assuming that the output voltage, v_o, is zero, this yields:

$$k_{max} = 15. \tag{C.15}$$

Thus, even in a situation where high parasitic reactances exist between paralleled series inverter cells, 15 cells may be operated in parallel without obtaining excessive unbalance currents under worst case conditions.

RECEIVED
NATIONAL TECH
JUL 30 19
INFORMATION SE