DEPARTMENT OF TRANSPORTATION RADIONAVIGATION ACTION PLAN SUMMARY

APRIL 1979

DOCUMENT IS AVAILABLE TO THE PUBLIC
THROUGH THE NATIONAL TECHNICAL
INFORMATION SERVICE, SPRINGFIELD,
VIRGINIA 22161

U.S. DEPARTMENT OF TRANSPORTATION

Research and Special Programs Administration

Office of Transportation Programs Bureau

Office of Systems Engineering

Washington D C 20590

REPORT NO. DOT-RSPA-DPB-20-79-1

Technical Report Documentation Page

1. Report No.	2. Government Accession No.	3. Recipient's Catalog No.
DOT-RSPA-DPB-20-79-1		

4. Title and Subtitle	5. Report Date
DEPARTMENT OF TRANSPORTATION RADIONAVIGATION ACTION PLAN SUMMARY	April 1979
	6. Performing Organization Code DTS-53
7. Author(s) Joseph M. Gutwein, Editor	8. Performing Organization Report No. DOT-TSC-RSPA-ED-79-1
9. Performing Organization Name and Address U.S. Department of Transportation Research and Special Programs Administration Transportation Systems Center Cambridge MA 02142	10. Work Unit No. (TRAIS) RS917/R9523
	11. Contract or Grant No.
12. Sponsoring Agency Name and Address U.S. Department of Transportation Research & Special Programs Administration Office of Transportation Programs Bureau Office of Systems Engineering Washington DC 20590	13. Type of Report and Period Covered Plan 1979-1985
	14. Sponsoring Agency Code DOT-RSPA-DPB-22

15. Supplementary Notes

16. Abstract

The first issue by the Department of Transportation (DOT) of its Radionavigation Action Plan Summary is presented herein. The DOT Radionavigation Action Plan Summary describes major DOT activities and decisions relating to navigation through 1985. The Plan outlines DOT actions in implementing the objectives and policies outlined in the DOT National Plan for Navigation, November 1977. Contained in the Action Plan Summary are descriptions of important activities relating to system improvements, research and development efforts, alternative system cost studies, and critical future DOT decisions relative to navigation. This Plan will be suitably modified and updated on an annual basis, to reflect evolving plans.

17. Key Words		18. Distribution Statement
Navigation	OMEGA	DOCUMENT IS AVAILABLE TO THE PUBLIC THROUGH THE NATIONAL TECHNICAL INFORMATION SERVICE, SPRINGFIELD, VIRGINIA 22161
Satellites	Beacons	
LORAN-C	Area Navigation	
VOR-DME		
VOR-TAC		

19. Security Classif. (of this report)	20. Security Classif. (of this page)	21. No. of Pages	22. Price
Unclassified	Unclassified	32	

Form DOT F 1700.7 (8-72) Reproduction of completed page authorized

METRIC CONVERSION FACTORS

Approximate Conversions to Metric Measures

Symbol	When You Know	Multiply by	To Find	Symbol
		LENGTH		
in	inches	2.5	centimeters	cm
ft	feet	30	centimeters	cm
yd	yards	0.9	meters	m
mi	miles	1.6	kilometers	km
		AREA		
in^2	square inches	6.5	square centimeters	cm^2
ft^2	square feet	0.09	square meters	m^2
yd^2	square yards	0.8	square meters	m^2
mi^2	square miles	2.6	square kilometers	km^2
	acres	0.4	hectares	ha
		MASS (weight)		
oz	ounces	28	grams	g
lb	pounds	0.45	kilograms	kg
	short tons (2000 lb)	0.9	tonnes	t
		VOLUME		
tsp	teaspoons	5	milliliters	ml
Tbsp	tablespoons	15	milliliters	ml
fl oz	fluid ounces	30	milliliters	ml
c	cups	0.24	liters	l
pt	pints	0.47	liters	l
qt	quarts	0.95	liters	l
gal	gallons	3.8	liters	l
ft^3	cubic feet	0.03	cubic meters	m^3
yd^3	cubic yards	0.76	cubic meters	m^3
		TEMPERATURE (exact)		
°F	Fahrenheit temperature	5/9 (after subtracting 32)	Celsius temperature	°C

Approximate Conversions from Metric Measures

Symbol	When You Know	Multiply by	To Find	Symbol
		LENGTH		
mm	millimeters	0.04	inches	in
cm	centimeters	0.4	inches	in
m	meters	3.3	feet	ft
m	meters	1.1	yards	yd
km	kilometers	0.6	miles	mi
		AREA		
cm^2	square centimeters	0.16	square inches	in^2
m^2	square meters	1.2	square yards	yd^2
km^2	square kilometers	0.4	square miles	mi^2
ha	hectares (10,000 m^2)	2.5	acres	
		MASS (weight)		
g	grams	0.035	ounces	oz
kg	kilograms	2.2	pounds	lb
t	tonnes (1000 kg)	1.1	short tons	
		VOLUME		
ml	milliliters	0.03	fluid ounces	fl oz
l	liters	2.1	pints	pt
l	liters	1.06	quarts	qt
l	liters	0.26	gallons	gal
m^3	cubic meters	35	cubic feet	ft^3
m^3	cubic meters	1.3	cubic yards	yd^3
		TEMPERATURE (exact)		
°C	Celsius temperature	9/5 (then add 32)	Fahrenheit temperature	°F

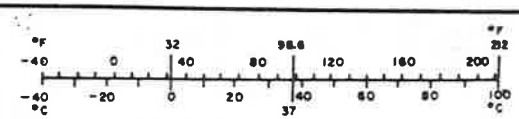

OFFICE OF THE SECRETARY OF TRANSPORTATION
WASHINGTON, D.C. 20590

DEPUTY
UNDER SECRETARY

LETTER OF PROMULGATION

This letter promulgates the first issue by the Department of Transportation (DOT) of its Radionavigation Action Plan Summary.

The DOT Radionavigation Action Plan Summary describes major DOT activities and decisions relating to navigation through 1985. The Plan outlines DOT actions in implementing the objectives and policies set forth in the DOT National Plan for Navigation, November 1977. Contained in the Action Plan Summary are descriptions of important activities related to system improvements, research and development efforts, alternative system cost studies, and critical future DOT decisions relative to navigation.

While this Action Plan Summary represents the underlying scope and thrust of the DOT radionavigation program, it is subject to modification as a result of budget priorities and evolutionary technical, economic, and institutional factors both within and external to DOT. This Plan will be suitably modified and updated to reflect evolving plans. Your comments and suggestions regarding the Plan are solicited so they may be considered during future revision.

John J. Fearnsides
Chairman, DOT Navigation Council

TABLE OF CONTENTS

Section		Page
1.	INTRODUCTION	1
2.	RESPONSIBLE DOT ORGANIZATIONS	2
3.	SCOPE AND THRUST OF THE DOT PROGRAM	3
4.	ACTION PLAN SUMMARIES	5
	4.1 Navigation Policy and Planning	5
	4.2 Air Navigation	7
	4.2.1 Short Range (U.S. and Territories)	9
	4.2.2 Offshore and Remote Areas	10
	4.2.3 Oceanic	11
	4.2.4 Landing	12
	4.2.5 Area Navigation	13
	4.2.6 Helicopter IFR Operations	13
	4.3 Marine Navigation Plans	14
	4.3.1 Oceanic	14
	4.3.2 Coastal	16
	4.3.3 Harbor Approaches and Harbors	
	4.4 Land Navigation Plans	18
5.	SUMMARY OF DOT R&D PLAN FOR GPS	19
6.	SUMMARY OF CRITICAL DOT DECISIONS	23
		25

LIST OF ILLUSTRATIONS

Figure		Page
1.	Major Federally Provided Systems Available for Civil Navigation.....	6
2.	Air Navigation Actions and Decisions.....	8
3.	Marine Navigation Actions and Decisions.....	15
4.	Land Navigation Actions and Decisions.....	21

1. INTRODUCTION

The Department of Transportation (DOT), as part of its authority under the DOT Act (Public Law 89-670), is the primary Government provider of aids to navigation for use by the civil community and for general purpose use by the military. Under this authority, the DOT is responsible for the preparation, promulgation, updating, and revision of the DOT National Plan for Navigation (NPN). The Department of Defense, the Department of Commerce, and the National Aeronautics and Space Administration are vitally interested in the DOT-provided navigation systems. These agencies participated with DOT in the preparation of the NPN and have concurred with the plans as published. The third edition of the NPN was approved by the Secretary of Transportation in November 1977.

The DOT NPN defines national objectives and establishes coordination for civil navigation systems planning among all government agencies. This single document contains U.S. Government policy and plans for navigation systems of interest to, and for use by, the multimodal civil user community. The NPN describes existing systems and requirements, and presents future planning for R&D, implementation, and operation.

Action plans, consistent with the objectives outlined in the NPN, have been prepared by DOT to identify important activities relating to system improvements, R&D efforts, alternative system cost studies, and critical future DOT decisions pertinent to navigation. These DOT action plans are summarized in this document to show major DOT activities and decisions relating to navigation through 1985. These decisions are expected to impact on system developments beyond the 1995 time period. While these action plans represent the underlying scope and thrust of the DOT radionavigation program, they are subject to modification as a result of budget decisions or evolving technical, economic, and institutional factors both internal and external to DOT.

2. RESPONSIBLE DOT ORGANIZATIONS

Within DOT, two operating administrations have been assigned statutory responsibilities regarding the provision of aids to navigation: the U.S. Coast Guard (USCG) and the Federal Aviation Administration (FAA). In addition, other modal agencies of DOT have user requirements which may be satisfied by radionavigation or radiolocation systems. These modal agencies are the Urban Mass Transportation Administration (UMTA), the Federal Highway Administration (FHWA), the Federal Railway Administration (FRA), the National Highway Traffic Safety Administration (NHTSA), and the St. Lawrence Seaway Development Corporation (SLSDC).

The Research and Special Programs Administration (RSPA), recently formed in DOT, is responsible for coordinating intermodal transportation issues and planning. RSPA has two organization elements involved in navigation: 1) the Transportation Programs Bureau of RSPA, which coordinates and publishes the NPN and directs special projects to evaluate multimodal applications and benefits of navigation systems provided by DOT; and 2) the Transportation Systems Center (TSC) of RSPA, which provides technical support to the DOT Navigation Working Group and to RSPA on navigation systems. TSC, when requested, also supports high priority multimodal transportation programs under the direct responsibility of the operating modal administrations.

The DOT has recently formed a new structure to coordinate planning of civil radionavigation systems provided by the DOT and to assure their consistency with DOT plans set forth in the NPN. The new structure is a two-tier organization consisting of a Navigation Working Group and a Navigation Council. The Navigation Working Group is composed of middle management representatives from RSPA, FAA, SLSDC and USCG; ad hoc advisory representatives from UMTA, FHWA, FRA and NHTSA; and technical support from TSC. The Navigation Council is chaired by the Deputy Under Secretary and is comprised of top management representatives from RSPA, FAA, SLSDC and USCG.

3. SCOPE AND THRUST OF THE DOT PROGRAM

The scope of the DOT radionavigation action plan described herein is consistent with, and closely follows, the DOT National Plan for Navigation published in November 1977. The NPN describes an effective set of existing and planned systems which meet most of the current and projected requirements. These requirements were identified from an understanding of the needs of the users of the DOT-provided navigation systems. Although the existing systems are of proven utility, their status is under examination because new requirements are anticipated in the future which present systems do not satisfy. Therefore, consideration must be given to improve, supplement or potentially replace current systems with other systems. The major areas of examination are:

1. The possible application to civil needs of the DOD NAVSTAR Global Positioning Satellite (GPS) system.
2. DOT's desire to reduce operating expenses and to furnish the required services with the most efficient mix of systems.
3. The emergence of new requirements and users with different needs. These include offshore air navigation used in helicopter IFR operations and radiolocation systems used by land vehicles.
4. The existence of unmet operational requirements outlined in the NPN and the attempt of DOT to satisy them. These include harbor approach and inland waterway navigation for ships.
5. Lack of complete Loran-C coverage in certain areas of the U.S. coastal waterways (North Slope of Alaska, part of Hawaii, and U.S. territory in the Eastern Caribbean).

All of these factors raise issues which require resolution, and at present, they are the main driving impetus in the DOT program. Since navigation systems are only one segment of the various operational systems required to assure safe and efficient

transportation, changes in aids to navigation involve significant impact on many other operating procedures. This fact, considering the lack of definitive current data in the above areas, necessitates planning of R&D programs for gathering the necessary data and knowledge to support imminent major decisions about the next twenty-plus years of operating philosophy. These decisions now appear to be necessary in the early 1980's. Some of the more important questions under study to support such decisions are:

1. What system, if any, should be the replacement for VOR-DME in the post-1995 time frame?
2. To what extent can the existing wide-area Loran-C system be used to satisfy the navigation requirements of vessels in harbor approaches and inland waterways? How and where can Loran-C be augmented cost-effectively to serve this purpose?
3. Can the Loran-C signals be utilized by land vehicles to increase productivity significantly, and should DOT furnish additional stations in areas presently lacking adequate coverage for this use?
4. What systems will be satisfactory for helicopter IFR operations, for offshore air navigation and for general aviation flying at low altitudes?
5. What are the economic, technical, and operational trade-offs for future navigation systems?
6. What ranges of accuracy, civil user costs, and signal availability will be provided by the DOD NAVSTAR GPS system? What are the international and institutional implications?

DOT plans a considerable effort to provide answers to these questions and to improve existing operations. This effort is summarized in the following sections.

4. ACTION PLAN SUMMARIES

4.1 NAVIGATION POLICY AND PLANNING

The DOT action plans are presented below in the context of air, marine and land navigation systems. Discussions of various systems comprising the overall navigation system in each service are presented. Activities which have multimodal impacts for a given system are highlighted - e.g., the air and marine applications of Omega and of Loran-C. To facilitate discussions of the action plans associated with air, marine, or land navigation systems, it is helpful to relate to the objectives outlined in the NPN. The current status of all systems, as presented in the NPN in regard to system applicability, coverage, and schedule, is illustrated in Figure 1.

In response to concerns for improved coordination and consolidation of government-provided radionavigation system developments, the DOT is supplementing its routine liaison and is developing a formal working relationship with the DOD through the Office of the Under Secretary of Defense Research and Engineering (OUSDRE). Planning and R&D coordination agreements will be formalized in a memorandum of agreement currently being written by the two agencies, one purpose of which is to prepare a single Federal Radionavigation System Plan.

In order to provide a strong economic basis for future navigation systems decisions, a navigation system economic planning model is being developed by DOT to provide cost analyses of alternative systems, including costs to the government and civil air, marine, and land user groups. The model will be used for parametric sensitivity analyses of the most cost-effective and operationally viable mixes of radionavigation systems for multimodal and unimodal requirements (air, marine and land). These efforts will be augmented by data provided by ongoing R&D programs in each of the modes and by consideration of the technical, operational, and institutional issues related to DOT decisions.

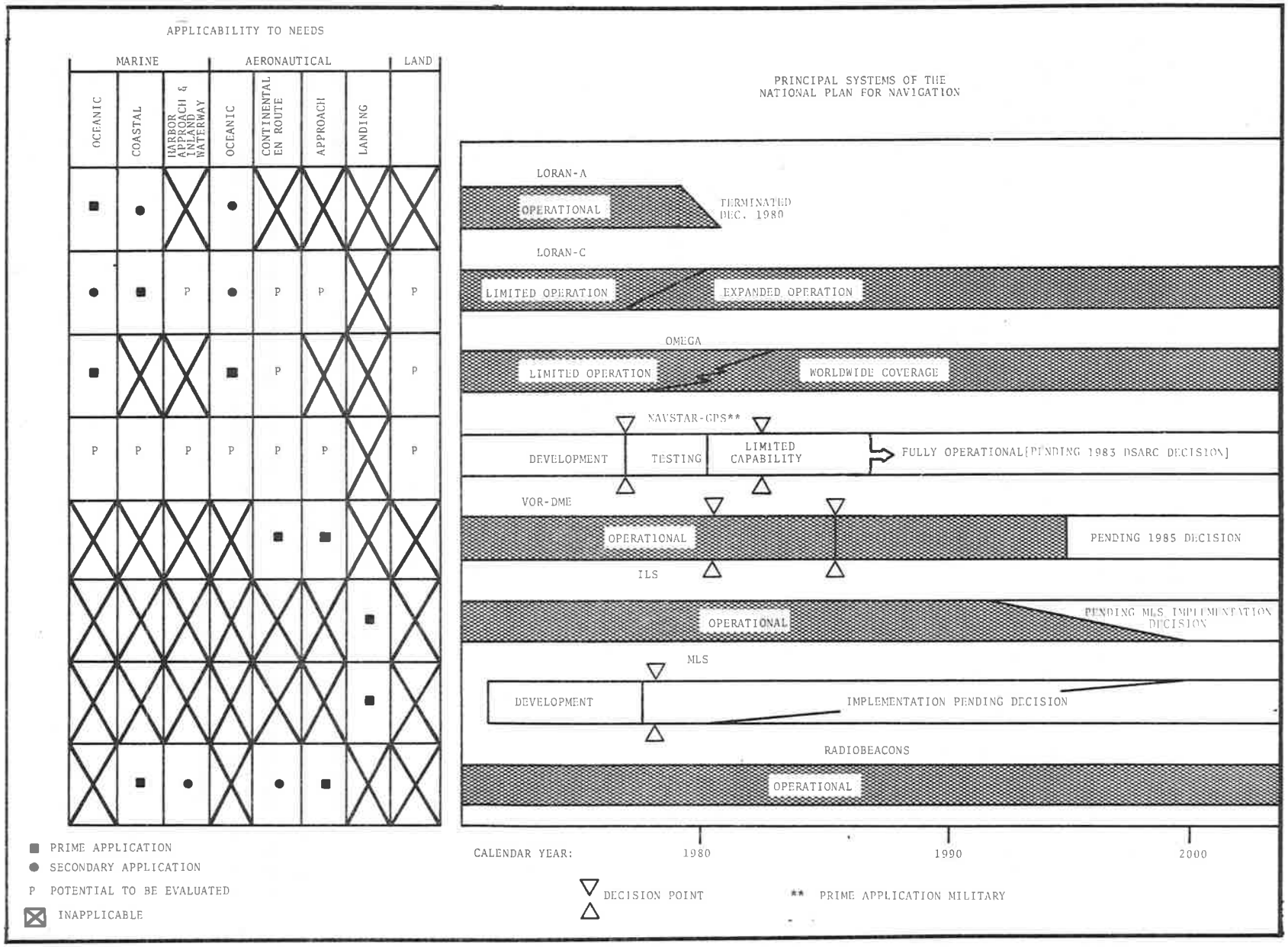

FIGURE 1. MAJOR FEDERALLY PROVIDED SYSTEMS AVAILABLE FOR CIVIL NAVIGATION

The DOT GPS R&D activities are summarized in Section 5 of this action plan. These activities will provide data which will impact on decisions concerning specific applications of GPS to the respective user communities served by these modes. Because of the potential multimodal applications of GPS, the modal R&D activities will be coordinated through RSPA. This coordination will help to assure complementary test programs and exchange of information among the modes, and will balance the data gathered to support, in a timely manner, future DOT multimodal navigation system decisions.

4.2 AIR NAVIGATION

The activities of the FAA, associated with improving navigation systems serving civil and military air users, are described below and scheduled as shown in Figure 2. The systems described are part of the existing National Airspace System. Of main concern is improvement of navigation service in areas already covered and extension of service to areas lacking adequate coverage. The discussion of navigation systems is presented as follows: short-range systems, offshore and remote areas, oceanic regions, landing systems, area navigation and helicopter IFR operations.

The potential availability of GPS to civil users is of paramount importance in the DOT navigation action plan. An R&D plan is summarized in Section 5 to evaluate GPS as a possible supplement or replacement for existing navigation systems such as VOR-DME, Loran-C, and Omega. Critical factors in determining potential utility of GPS will be accuracy, repeatability, availability of GPS signals for the civil sector, and the availability of "low cost" avionics for general aviation.

The GPS R&D Program of the FAA will obtain data on the potential performance of GPS, along with Loran-C, as possible replacements for VOR-DME. The FAA is developing requirements for accuracy and additional coverage to meet the projected growth in continental air traffic. These requirements will be used in technical and

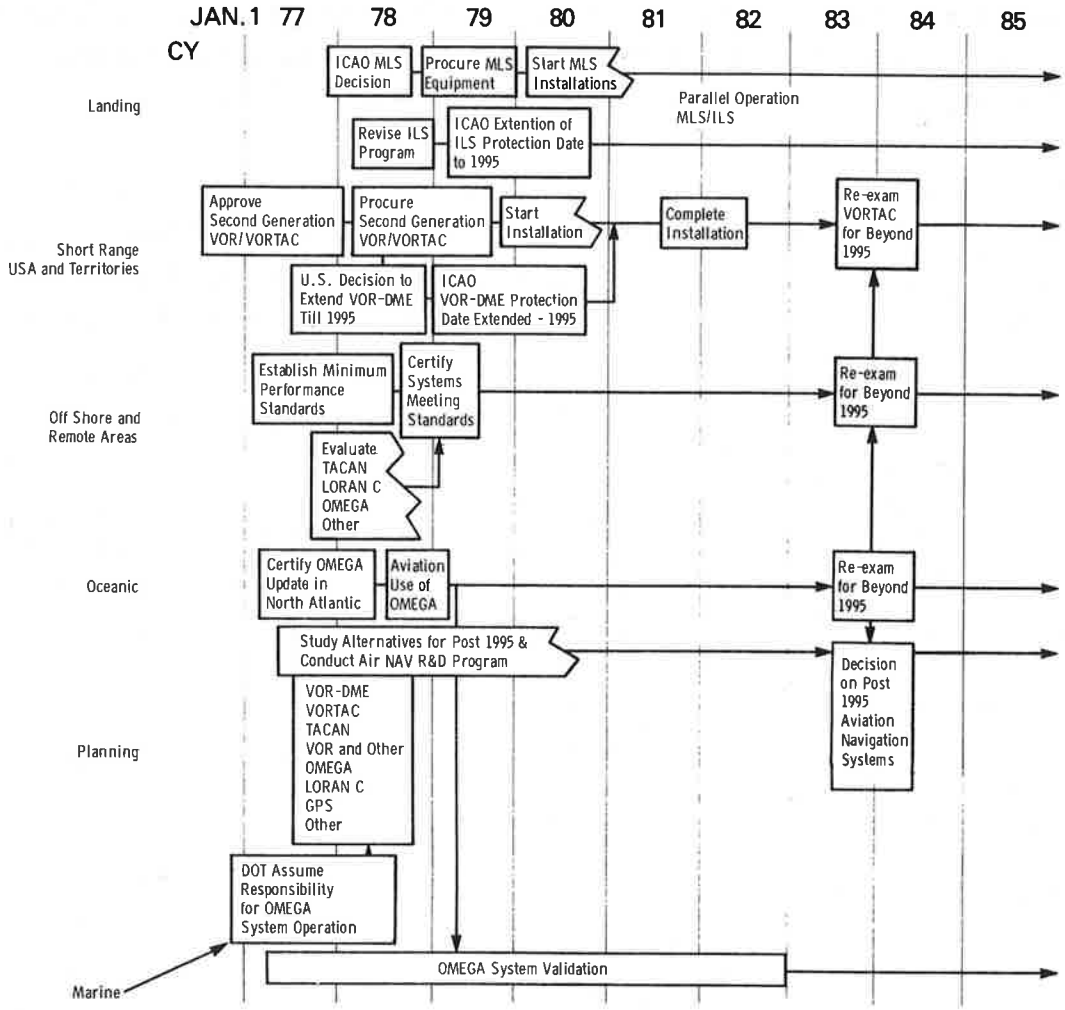

FIGURE 2. AIR NAVIGATION ACTIONS AND DECISIONS

cost analyses to assist in determining the navigation system best suited for aviation. A decision on the continental U.S. navigation system for the post-1995 time period is projected between 1983-1985.

4.2.1 Short Range (U.S. and Territories)

The mainstay navigation system of the National Airspace System is the internationally approved VOR-DME (VHF omni-range-distance measuring equipment) system. TACAN is a military angle measurement technique analogous to the civil VOR-DME. To provide the presently required coverage, there are about one thousand VOR-DME/VOR-TAC stations in the contiguous states. There is currently a program to modernize the VOR-DME/VOR-TAC system with solid-state equipment which will include remote maintenance monitoring provisions. This modernization program is expected to be completed in the mid-1980's and replaces equipment that has been in service up to 35 years. It is expected that this equipment will be in use at least until the mid-to-late 1990's and that the international protection data will be extended until at least 1995.

A Loran-C monitor system is also being developed which will provide a real-time input to FAA Flight Service Stations (FSS) on the status of Loran-C stations. This status information will identify stations that are unstable or off the air for maintenance and provide data relating to planned outages. This information will be disseminated through the Notices to Airmen (NOTAMS). This activity is currently planned for FY'79 funding, with FY'80 delivery.

The FAA is developing requirements for new users and ATC services to meet the projected growth in continental air traffic. These requirements will be used in technical and cost analyses to assist in determining the navigation system best suited for aviation. A decision on the continental U.S. navigation system for the post-1995 time period is expected to be made before 1985.

4.2.2 Offshore and Remote Areas

While the present VOR-DME coverage meets most civilian user requirements, there are areas, such as some mountainous regions and low-altitude airspace areas, where there is a requirement for air navigation service that VOR-DME does not presently provide. Three alternatives are being investigated to provide the required coverage: (1) additional VOR-DME facilities, (2) supplementation of the existing VOR-DME system (Loran-C, Omega, and Omega/VLF Communications), and (3) a new system such as GPS. Currently, Omega/VLF is certified as a supplement to VOR-DME with Loran-C certification expected to be completed within a year. The more cost-effective navigation systems in offshore and remote areas may be those capable of serving users other than just aircraft.

The FAA Loran-C program addresses the issues of Loran-C signal availability and reliability; the performance of the Loran-C system for en route, terminal, and nonprecision approach operations; and the feasibility of developing low-cost avionics, particularly for general aviation. This is part of a joint effort between the FAA and the United States Coast Guard which includes establishing a Loran-C data base, developing a Loran-C monitoring system, evaluating various types of avionics equipment, developing low-cost avionics equipment, developing geographical grid corrections, and determining the impact of using Loran-C navigation on air traffic control (ATC) and flight inspection procedures.

The DOT (FAA and RSPA) is also conducting tests to assess the operational feasibility of defining Loran-C for en route, terminal and nonprecision approaches for a number of airports in the State of Vermont. Loran-C navigation will be evaluated by a precise ground reference system. In addition, measurements will be made by the DOT of short-term variations in Loran-C signal stability. NASA and TSC will be examining long-term seasonal variations. Tests of Loran-C-aided nonprecision approaches are also planned at other airports along the East and West Coasts and in Alaska.

As part of a remote-area air navigation R&D effort, the FAA plans to start an evaluation program with Canada on a Differential

Omega system in the Fall of 1979. Three nondirectional beacons will be equipped to transmit the Differential Omega corrections to aircraft. The evaluation will be conducted over the next year in the Alaskan Region and will involve the FAA flight-inspection Convair, a Twin Otter owned by the Canadian Government, and some cooperating commercial aircraft. It is anticipated that six sets of avionics will be used for the program. Future program activity will include development and evaluation of low-cost Omega avionics. At the current time, it is hoped that the price of Omega avionics can be reduced to the $3000-to-$4000 range.

4.2.3 Oceanic

The FAA has certified the use of Omega for the purpose of updating self-contained systems, including the Doppler and inertial navigation systems. The FAA has recently certified dual Omega as a stand-alone oceanic air navigation system. The FAA Omega program includes activities to determine the suitability of Omega as a sole means of oceanic navigation for air carrier aircraft, the use of Omega as a remote-area supplement to VOR-DME and the feasibility of developing easy-to-use low-cost Omega avionics. The approach is similar to the one used for the Loran-C program and includes the establishment of a worldwide Omega data bank by collecting information from on-board domestic, foreign and government aircraft.

Another activity in the FAA oceanic Omega program is the development and evaluation of an Omega-VLF monitor system. A model of the Omega portion of the system is currently undergoing evaluation by the FAA. This system provides warnings on Omega signal outages and marginal signals and identifies the best stations for use in each geographical area. This information is to be provided to Flight Service Station (FSS) centers, and will be passed on to the pilots through NOTAMS. The FAA plans to extend the monitor system to include VLF monitoring capability and later to use information from the SOLARD system - a satellite system which detects and reports information on solar flares.

Since the Omega system is required to operate at very low signal-to-noise ratios, one program activity has been to develop a low-noise antenna. This antenna is undergoing testing and evaluation. Future activities under the noise reduction program include studies of alternative methods of noise reduction, further antenna research, and determination of improved methods of discharging and bonding aircraft.

An Omega simulator is being developed to permit rapid evaluation and certification of new Omega receiver designs for oceanic navigation applications. It will simulate a variety of signal-to-noise conditions of the Omega signal as well as station failure conditions.

4.2.4 Landing

At the ICAO meeting in April 1978, the member countries agreed that instrument landing systems (ILS) would be operated at international airports until 1995. ICAO also decided on a specific microwave landing system (MLS) technique to be used as the international standard. While the ILS system currently in use has an excellent safety record, the MLS is being proposed as a replacement because it poses fewer siting and installation problems, which makes the MLS usable at more locations and with lower installation costs than ILS. Also, there is a limit on the number of ILS facilities that can be installed in a small geographic area because of radio spectrum crowding problems. The cost impact of MLS dictates a careful and continued consultation and cooperation with both domestic and international interests. Application of VOR-DME, Loran-C, Differential Omega, or the future GPS system to precision approaches at airports does not appear possible because of the high degree of accuracy required in landing operations. For this reason, the ILS and its ultimate replacement, the MLS, will continue to provide terminal approach navigation service. There are no efforts being made to replace MLS. Moreover, none of the current or proposed navigation systems other than MLS (e.g. GPS) can meet the landing accuracy performance requirements.

4.2.5 Area Navigation

The FAA has endorsed the implementation of Area Navigation (RNAV). The objective of the RNAV program is to support integration of RNAV, in an evolutionary manner, into the National Airspace System. At present the main objective is associated with development of avionics standards. This FAA activity will be closely coordinated with the efforts of the aeronautical industry. The end result of the RNAV program will be the development of minimum performance standards for avionics prepared in cooperation with industry.

The advent of latitude/longitude grid navigation systems such as Loran-C and GPS has increased the awareness of pilot workload and system integration problems involved in using basic latitude/longitude equipment. RNAV procedures with such systems may differ from RNAV based on the VOR-DME system. Typical GPS and Loran-C equipment will be installed in a simulation facility to study problems relating to pilot/controller workload, real-time coordination, and minimization of flight technical error for various civil air user groups (VFR through high-density IFR). R&D will also be devoted to development of RNAV charting concepts and waypoint definition.

4.2.6 Helicopter IFR Operations

The FAA is examining special navigation requirements of helicopters for operation within the air traffic control system, both within the CONUS and in offshore areas. The portion of this program relating to navigational requirements covers the operational evaluation of Loran-C and Omega as well as VOR-DME and DME-DME for operations on area navigation routes within the CONUS and on specially defined routes suitable for supporting offshore oil exploration. The program will also examine the use of airborne weather radar in conjunction with supplementary equipment to assist in locating and making approaches to offshore oil rig locations. This latter activity will examine the effectiveness of several techniques including active beacon systems, passive

reflectors, corner reflectors and a variety of RF lenses for this purpose. Data will be collected by a NASA CH-53H helicopter operating along the area navigation routes between Boston and Washington National Airports. Initially, the TDL-424 Loran-C receiver will be used to take the data. Later, tests will collect comparative data on both the TDL-424 and the lower-cost TDL-711 systems. Another FAA effort will be data collection by the FAA/ NASA ehlicopter operating in the offshore area in the vicinity of Atlantic City. The data collection system will simultaneously be taking data from the VOR-DME (where available), Loran-C, and Omega systems on board the helicopter.

In addition to the FAA helicopter activity, the Coast Guard will be operating a helicopter with TDL-424 avionics equipment along a route between Otis Air Force Base in Massachusetts and Washington National Airport. The purpose of these tests will be to collect position data from the ARTS III facilities located along the route in order to assess the performance of Loran-C for helicopter operations.

4.3 MARINE NAVIGATION PLANS

The plans of the USCG for improving marine navigation systems, which serve the civil maritime user, are described below and scheduled as shown in Figure 3. The discussions are presented in terms of the regions of marine navigation as follows: oceanic, coastal, harbor approaches and harbors. The USCG GPS R&D activities are summarized in Section 5. Of major importance is the accuracy available from low-cost GPS navigation receivers designed for marine navigation in coastal and harbor areas.

4.3.1 Oceanic

The USCG is in the process of validating the coverage and accuracy of the Omega system as an oceanic navigation aid to marine and aviation users. The Omega navigation system provides general and en route navigation service worldwide for marine and

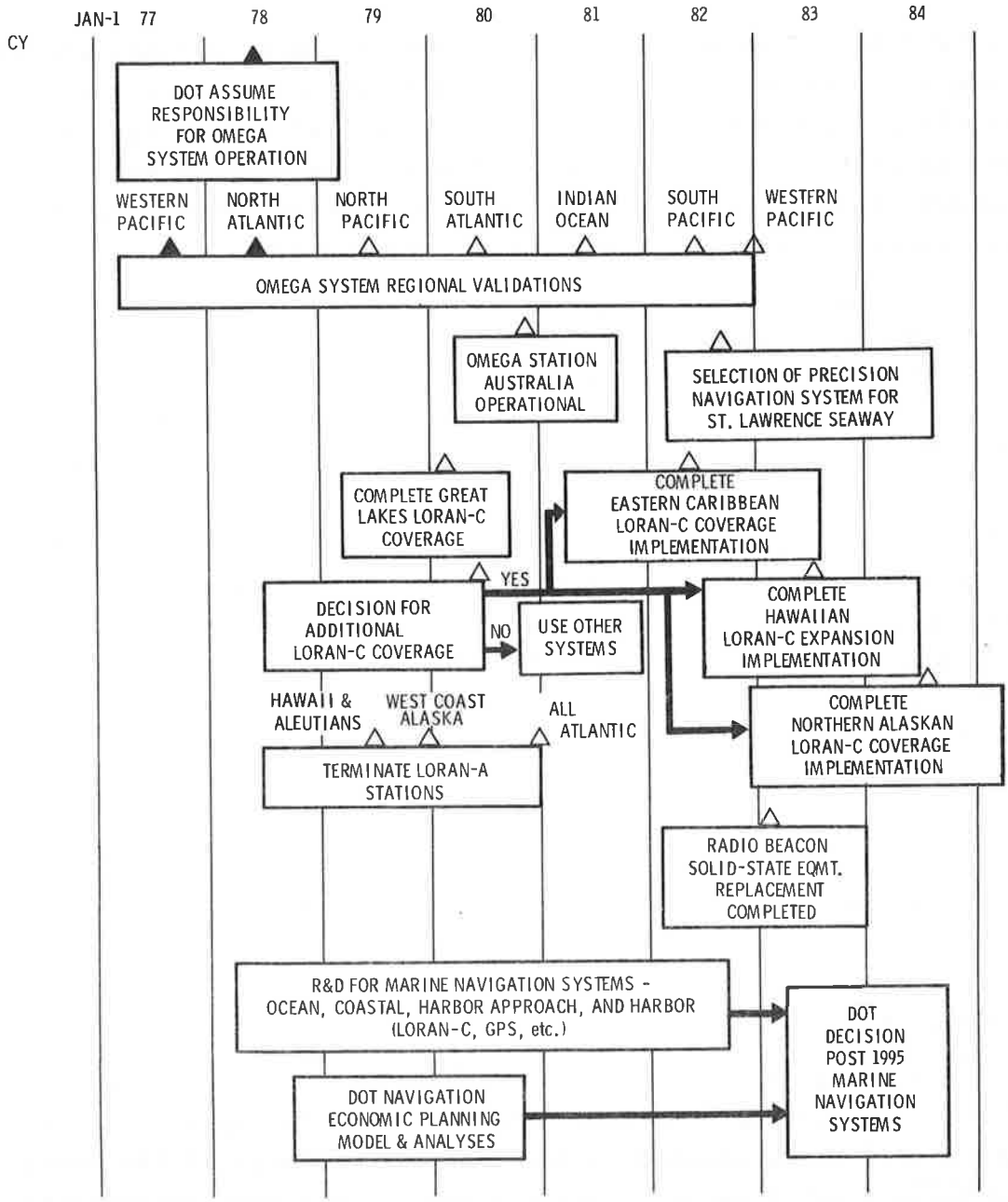

FIGURE 3. MARINE NAVIGATION ACTIONS AND DECISIONS

air users from a network of eight stations. Omega was implemented originally by the U.S. Navy to saftisfy a DOD requirement for worldwide en route navigation and is expected to reamin indefinitely as an alternate or backup system for the DOD NAVSTAR GPS. Omega was endorsed in 1974 by DOT and DOD as the radionavigation system for worldwide en route general purpose use.

Six partner nations cooperate in the operation of the Omega system and share operating and maintenance costs with the U.S. Completion of the last station Australia in late 1980 will improve service in the Pacific. Omega already covers the oceanic areas of most of the world. However, there remain some questions about the actual worldwide performance of Omega. The Coast Guard will progressivley measure and promulgate, on a regional basis, worldwide coverage and accuracy capabilities of the Omega system. Operation and validation of the Omega navigation system and the progressive improvement of corrections for Omega propagation errors are the major CG activities associated with oceanic navigation. As each given geographic area is validated, Omega system users will be appropriately advised of operational limitations. The Omega system cannot be declared fully operational worldwide until the eighth station is in operation, and the accuracy and coverage is measured and validated. This is expected to take place sometime in 1982.

4.3.2 Coastal

The primary system in use for U.S. coastal marine navigation is the Loran-C system. In most areas, Loran-C is replacing Loran-A, which will be terminated in December 1980. Omega is the designated Loran-A replacement in other areas. A national implementation plan was initiated to provide Loran-C coverage in the coastal waterways of the contiguous 48 states, Southern Alaska, and in the Great Lakes. Station implementation is scheduled for completion in 1980. The plan, as updated, adds 12 continental U.S. stations and 1 Canadian station to the existing netowrk of 27 stations built originally for the DOD throughout the Northern

Hemisphere. The U.S. and Canada are discussing the possible addition of a second Canadian station to improve service on the west coast of North America. Such a station may be built on Vancouver Island. The FY'79 plan will essentially complete expansion of Loran-C coastal service. In addition, the current program includes plans for modernization of many Loran-C stations with additional provisions for improving grid monitoring facilities. These activities will take place from 1979 through 1984.

Construction of the final Loran-C stations in Northern Minnesota and Vancouver and reconfiguration of the existing East Coast Loran-C chain will provide full coverage of the U.S. coastal waterways and the Great Lakes, except for part of Hawaii, Puerto Rico - Virgin Islands, and the Alaskan North Slope. The latter areas are being evaluated as noted below, each in the context of geographical requirements and alternative navigation systems that might meet their needs:

1. Hawaii: Coverage does not extend fully to the major islands. Construction of one station on Kauai would extend coverage over much of the waters in the immediate vicinity of the major islands. Complete coverage of the coasts of the major islands is not a practical possibility. The need for additional coverage is under study, with a decision expected in 1980.

2. Puerto Rico-Virgin Islands: Two alternative configurations are under study. One would provide localized coverage of most of the coast of Puerto Rico and the Virgin Islands from three relatively low-power stations, all located in U.S. territory. The other would provide wide-area coverage over much of the Caribbean from high-power stations, most or all of which would have to be built in foreign territory. Examination of the costs and potential benefits of the Caribbean Loran-C service and of the potential availability of station sites in both U.S. and foreign territory in the Caribbean is ongoing in 1979. A recommendation for or against the expansion of Loran-C service into the Eastern Caribbean is planned for mid-1980.

3. Alaskan North Slope: No data has been established for determining what navigation systems will be used to provide service to the Alaskan North Slope. The decision depends upon both air and marine navigation requirements. A review of the maritime requirements is scheduled for mid-1980. In the meantime, the FAA is evaluating Loran-C, Omega/Differential Omega, VOR, and GPS for air navigation in this region.

The USCG operates a network of marine radio beacons which are short- to medium-range (10-175 NM) aids to navigation useful for position-fixing. Although the radio beacons are less accurate than Loran-C, they provide the primary radio aid to navigation for many smaller vessels and boats, and are used by many large ships for homing and harbor approach. In the U.S. there are 196 existing radio beacons today, and 30 more are being established to meet the increasing use by small vessels. The current improvement program will replace 48 different types of obsolete, unreliable radio beacon equipment with a standardized design of solid-state transmitting equipment which will reduce annual operations and maintenance costs.

Radar beacons (RACON) are short-range radio devices used to provide radar reference points in areas of flat coastal terrain and other places where it is important to identify a special fixed or floating aid. The CG is planning to acquire a modest number of swept-frequency RACONS in the 1980's to meet critical requirements.

4.3.3 Harbor Approaches and Harbors

There are a number of projects to investigate the use of Loran-C for other than offshore marine navigation in the coastal waterways. The retransmission of Loran-C coordinates is being examined for use in surveillance and tracking of marine vessels. The CG is developing Loran-C for use as a precision navigation system in harbor approaches and harbors. For example, a mini-Loran-C chain installed in the St. Marys River, is being

evaluated to establish the capabilities of a short baseline Loran-C chain configured specifically for precision navigation in a localized area.

The St. Lawrence Seaway Development Corporation (SLSDC) has undertaken a program to improve all-weather navigation in the St. Lawrence Seaway. The program is expected to result in a three-to four-fold increase in system capacity during those periods at the beginning and end of the shipping season when conventional lighted, floating aids to navigation have been removed because of ice.

Under the Congressionally mandated and funded Great Lakes - St. Lawrence Seaway Season Extension Demonstration Program, the SLSDC, in its capacity as U.S. lead agency for operations in the St. Lawrence River, has assigned technical responsibility to the Transportation Systems Center. TSC is pursuing a demonstration project comprised of:

- Definition of system requirements - system capacity as a function of accuracy and specification of guidance parameters and reliability.
- Development of a test plan - selection of a test bed for the St. Lawrence River and definition of test procedures.
- Survey of available systems - electronic positioning systems including shipboard hardware.
- Full evaluation/validation of the system requirements utilizing one or more selected systems.

From the TSC test results, the SLSDC, in consultation with its Canadian counterpart, will select a precise all-weather navigation system for installation in the St. Lawrence Seaway.

4.4 LAND NAVIGATION PLANS

As navigation benefits to land users become apparent and as receiver equipment costs decrease due to technology improvements and expanding user markets, adaptation of the existing navigation systems to serve multimodal civil users may prove cost-effective. R&D activities are planned, therefore, to investigate the potential

benefits of Loran-C and GPS to both public and private land users - e.g., truck fleets, buses, and police and emergency vehicles.

The Loran-C stations which serve maritime navigation in the U.S. coastal waterways and the Great Lakes also provide coverage over two-thirds of the land area of the contiguous 48 states and for 92 percent of its population. This service has many potential applications which can be expanded on a more economical nation-wide basis by the addition of three to five Loran-C stations in the mid-continent. The Coast Guard is prepared to build these stations and incorporate them into the existing Loran-C network if the Secretary of Transportation directs such expansion of Loran-C coverage for the benefit of land users.

There appear to be a great number of potential uses for radio-location service on land which may provide substantial benefits to transportation. Federal, state, and private organizations are becoming increasingly aware of this potential. Organizations within DOT such as FHWA, NHTSA, UMTA, and FRA are conducting or planning projects to investigate land use of Loran-C. An application of Loran-C in urban areas for automatic vehicle monitoring - e.g., buses; taxis; and police, fire surveillance, and emergency vehicles - is currently under UMTA sponsorship, with TSC performing the R&D evaluations.

The Departments of Energy, Agriculture, Interior, Commerce, and Health, Education, and Welfare, as well as a number of States, are conducting or planning projects involving land applications of a radionavigation capability. To date, the projects are generally investigations to develop techniques to use Loran-C for specific purposes where its accuracy, availability, and low user costs may be adequately demonstrated. It appears highly probable that in future years, "land navigation" will develop as a growth industry providing major benefits for government, industry, and the general public.

The major land navigation actions are scheduled as shown in Figure 4. Emphasis in these activities pertains to Loran-C applications for the land user. Tentative plans concerning GPS R&D for

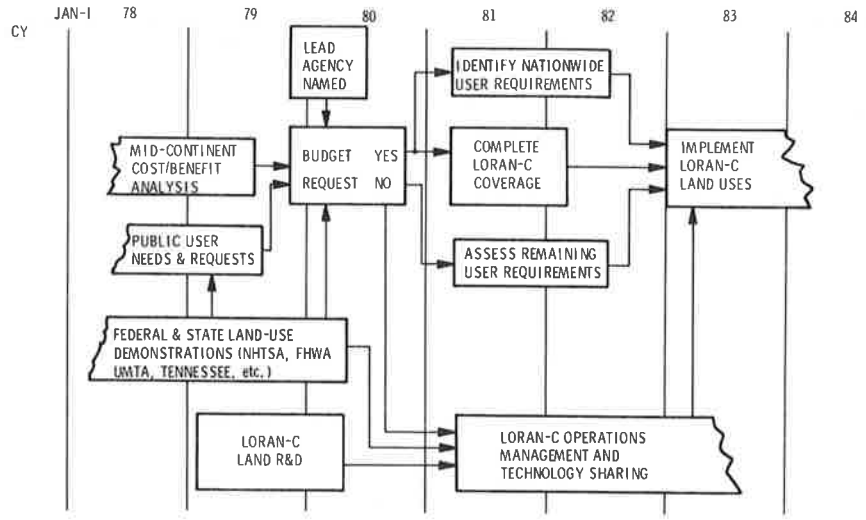

FIGURE 4. LAND NAVIGATION ACTIONS AND DECISIONS

land users are presented in Section 5 of this summary. Analyses of the mid-continent cost/benefits of Loran-C for land user applications are nearing completion, and a report will be published early in 1979. Concurrent with this analysis are land application demonstrations of Loran-C being carried out by DOT and several agencies of state governments. A Loran-C R&D program is in progress to obtain data on propagation effects, coverage, signal margins, and radio frequency interference. The critical issue for land users pertains to the DOT decision to extend Loran-C coverage to the mid-continent regions of the contiguous U.S. This will require installation of at least three to five additional Loran-C ground stations in that region. Assuming such a decision is made, major efforts will be devoted to expanding the implementation of land applications of Loran-C for the increased number of users who will require the nationwide navigation capability. The efforts will emphasize the transfer of technology to both the public and private sectors.

5. SUMMARY OF DOT R&D PLAN FOR GPS

Numerous agencies (DOD, DOC/MARAD, and NASA) are developing plans for GPS R&D programs. DOT recognizes a need to establish a coordinated government-wide GPS R&D program to evaluate civil navigation applications of GPS. Accordingly, DOT is taking initiatives to prepare a DOT GPS R&D plan as a first step toward obtaining a national GPS R&D plan. The DOT plan will represent a coordinated program of R&D efforts in participating modal administrations. This part of the DOT Action Plan will be published as a separate document. However, a summary of the DOT GPS R&D plan is presented below.

The issues concerning the use of the NAVSTAR-GPS for civil navigation relate to performance, cost, and availability of GPS versus other alternatives such as Loran-C, Omega and VOR-DME. Studies, analyses and tests are planned to develop performance and cost information for air, marine and land applications. GPS availability is an institutional matter which will be resolved within the U.S. Government. All information is to be collected and analyzed for the DOT to make a decision in FY'83-85 regarding the suitability of GPS for civil users and thus to establish the best mix of radionavigation systems in the post-1995 time frame.

GPS R&D activities for air applications are performed by the FAA. This effort includes laboratory tests, flight tests, cost analyses and several design studies. The major questions to be answered are: GPS performance versus aeronautical navigation requirements, and design efforts to bring GPS avionics costs in line with present-day navigation avionics. The FAA will submit a recommendation on GPS to the DOT in late FY'82.

The U.S. Coast Guard is performing GPS R&D activities for marine navigation in oceanic and coastal areas and in harbor approaches and harbors. This program includes receiver technology studies, GPS user field tests against competing systems, and investigation of course/acquisition (C/A) channel performance

potential. The major objectives of this effort are to determine the following: 1) the maximum accuracy capable from the C/A channel without consideration of receiver limitations; 2) the technical and economic factors that influence the design of a marine GPS receiver; and 3) the operational advantages and disadvantages of GPS versus alternative marine aids to navigation.

Currently, the applications of GPS to emergency medical services, highway site registration, automatic vehicle monitoring, and many other land uses is in an early stage of formation. Within DOT, future consideration by such agencies as NHTSA, FHWA, UMTA, and FRA will most likely depend on positive results in the field tests being planned by the FAA and the U.S. Coast Guard. For these reasons, the first stage of land R&D will consist of gathering information from these field tests on GPS accuracy, antenna designs, and other technical factors affecting receiver price. This will be followed by a second phase where the satellite signal margins will be measured in the presence of urban and rural radio frequency interference and signal attenuation factors such as terrain blockage and foliage.

The final stage of GPS land R&D will deal with receiver design for the dynamic conditions, noise environments, and multipath conditions peculiar to land vehicles. DOT agencies that foresee a need for GPS could conduct field tests during this stage to evaluate GPS capabilities in terms of user requirements. The field tests will be extrapolated to provide design guidelines for other applications which have been previously estimated to be cost-beneficial.

6. SUMMARY OF CRITICAL DOT DECISIONS

In the early 1980's, many far-reaching decisions will be made by DOT regarding the navigation systems that the Government will provide in the future. Figures 2, 3, and 4 summarize the major DOT navigation decisions for the air, marine and land navigation systems. The decisions cover two periods: 1983-1995, and post-1995. The 1983-1995 period involves decisions concerning in-place systems, their improvement, validation, and continuing service. Ongoing R&D activities in each modal administration, as described in Section 4, are expected to provide firm data to support the DOT decisions. Continued measurements of and improvements on the existing in-place systems are expected to provide useful data important to the future navigation system decisions. The decisions on post-1995 DOT systems will also depend on data made available from DOT-conducted navigation system economic studies, as well as extensive results obtained from the DOT R&D Program, including GPS. Data from the DOT GPS R&D Program, as well as results from cost/benefit analyses, will be available in time for late 1983-early 1984 decisions about post-1995 systems.

The FAA and USCG GPS programs will start testing the GPS systems as soon as user equipment and the space segment are available. This is expected sometime in late 1979. These tests will be similar to the other navigation system tests and will be based upon the analytic studies now under way. In a parallel program, the FAA and the USCG are developing a data base related to system accuracy and its dependence on receiver design and performance. Additional technical data experiments with GPS may be conducted by the USCG along with evaluations of existing receiver hardware to obtain data useful for the design of future low-cost user/receiver equipment.

550 copies